SIEMENS

SINAMICS

SINAMICS S110

List Manual

Edition 04/2015

Answers for industry.

SIEMENS

SINAMICS

SINAMICS S110

List Manual

Preface

Fundamental safety instructions 1

Parameters 2

Function diagrams 3

Faults and alarms 4

Appendix A

Index

Valid for

Drive	Firmware version
SINAMICS	4.4 SP3

04/2015

6SL3097-4AP10-0BP4

Legal information

Warning concept

This manual contains information which you must observe to ensure your personal safety as well as to avoid material damage. The notices referring to your personal safety are highlighted in the manual by a safety alert symbol, notices referring only to equipment damage have no safety alert symbol. Depending on the hazard level, warnings are indicated in a descending order as follows.

⚠ **DANGER**
indicates that death or serious injury **will** result if proper precautions are not taken.

⚠ **WARNING**
indicates that death or serious injury **could** result if proper precautions are not taken.

⚠ **CAUTION**
indicates that minor personal injury can result if proper precautions are not taken.

NOTICE
indicates that property damage can result if proper precautions are not taken.

If more than one level of danger is simultaneously applicable, the warning notice for the highest level is used. A warning notice with a safety alert symbol warning of injury may also include a warning relating to property damage.

Qualified personnel

The product/system described in this documentation may only be operated by **personnel qualified** for the specific task in accordance with the relevant documentation for the specific task, in particular its warning notices and safety instructions. Qualified personnel are those who, based on their training and experience, are capable of identifying risks and avoiding potential hazards when working with these products/systems.

Proper use of siemens products

Note the following:

⚠ **WARNING**
Siemens products are only permitted to be used for the applications listed in the catalog and in the associated technical documentation. If third-party products and components are to be used, they must be recommended or approved by Siemens. These products can only function correctly and safely if they are transported, stored, set up, mounted, installed, commissioned, operated and maintained correctly. The permissible ambient conditions must be met. Information in the associated documentation must be observed.

Trademarks

All names identified with ® are registered trademarks of Siemens AG. Any other names used in this publication may be trademarks whose use by third parties for their own purposes could violate the rights of the owner.

Disclaimer of liability

We have checked the contents of this publication for consistency with the hardware and software described. Since variance cannot be precluded entirely, we cannot guarantee full consistency. The information given in this document is reviewed at regular intervals and any corrections that might be necessary are made in the subsequent editions.

Siemens AG
Division Digital Factory
P.O. Box 48 48
90026 NUREMBERG
GERMANY

Document order number: 6SL3097-4AP10-0BP4
04/2015 Subject to change

Copyright © Siemens AG 2008 - 2015.
All rights reserved

Preface

SINAMICS documentation

The SINAMICS documentation is organized in the following categories:

- General documentation/catalogs
- User documentation
- Manufacturer/service documentation

More information

Information on the topics is available under the link http://www.siemens.com/motioncontrol/docu:

● Ordering documentation / overview of documentation

● Additional links to download documents

● Using documentation online (finding and searching in manuals/information)

Please send any questions about the technical documentation (e.g. suggestions for improvement, corrections) to the following e-mail address (docu.motioncontrol@siemens.com).

My Documentation Manager

At the following address (http://www.siemens.com/mdm), you can find information on how to create your own individual documentation based on Siemens' content, and adapt it for your own machine documentation.

Training

At the following address (http://www.siemens.com/sitrain), you can find information about SITRAIN (Siemens training on products, systems and solutions for automation and drives).

FAQs

You can find Frequently Asked Questions in the Service&Support pages under Product Support (http://support.automation.siemens.com)

SINAMICS

You can find information on SINAMICS at the following address (http://www.siemens.com/sinamics).

Usage phases and their documents/tools (as an example)

Table V-1 Usage phases and the available documents/tools

Usage phase	Document/tool
Orientation	SINAMICS S sales documentation
Planning/engineering	• SIZER engineering tool • Configuration manuals, motors
Decision making/ordering	• SINAMICS S Catalogs
Configuring/installation	• SINAMICS S110 Manual
Commissioning	• STARTER Commissioning Tool • SINAMICS S110 Getting Started • SINAMICS S110 Function Manual Drive Functions • SINAMICS S110 List Manual
Usage/operating	• SINAMICS S110 Function Manual Drive Functions • SINAMICS S110 List Manual
Maintenance/Service	• SINAMICS S110 Function Manual Drive Functions • SINAMICS S110 List Manual • SINAMICS S110 Manual

Target group

This documentation is intended for machine manufacturers, commissioning engineers, and service personnel who use the SINAMICS drive system.

Benefit

This manual provides all of the information, procedures and operator actions required for the particular usage phase.

Standard scope

The scope of the functionality described in this document can differ from the scope of the functionality of the drive system that is actually supplied.

- Other functions not described in this documentation might be able to be executed in the drive system. However, no claim can be made regarding the availability of these functions when the equipment is first supplied or in the event of service.
- The documentation can also contain descriptions of functions that are not available in a particular product version of the drive system. The functionalities of the supplied drive system should only be taken from the ordering documentation.
- Extensions or changes made by the machine manufacturer must be documented by the machine manufacturer.

For reasons of clarity, this documentation does not contain all of the detailed information on all of the product types and cannot take into consideration every conceivable type of installation, operation and service/maintenance.

Technical Support

You will find phone numbers for other countries for technical support in the Internet in the "Contact" area at the following address (http://www.siemens.com/automation/service&support).

EC Declaration of Conformity, certificates, certifications, manufacturers declarations

You can find the EC Declaration of Conformity for the relevant directives as well as the relevant certificates, prototype test certificates, manufacturers declarations and test certificates for functions relating to functional safety ("Safety Integrated") in the Internet at the following address (http://support.automation.siemens.com/WW/view/de/21901735/134200).

You can obtain an up-to-date list of currently certified components on request from your local Siemens office. If you have any questions relating to certifications that have not yet been completed, please ask your Siemens contact person.

Note

You can find certificates for the North American market on the Internet page of the certifier:

- For products with UL-certificate (http://database.ul.com/cgi-bin/XYV/template/LISEXT/1FRAME/index.html)
- For products with TÜV SÜD certificate (https://www.tuev-sued.de/industry_and_consumer_products/certificates)
- For products with CSA-certificate (http://www.csagroup.org/de/en/services/testing-and-certification/certified-product-listing)

Notation

The following notation and abbreviations are used in this documentation:

Notation for faults and alarms (examples):

- F12345 Fault 12345
- A67890 Alarm 67890
- C23456 Safety message

Notation for parameters (examples):

- p0918 Adjustable parameter 918
- r1024 Display parameter 1024
- p1070[1] Adjustable parameter 1070, index 1
- p2098[1].3 Adjustable parameter 2098, index 1 bit 3
- p0099[0…3] Adjustable parameter 99, indices 0 to 3
- r0945[2](3) Display parameter 945, index 2 of drive object 3
- p0795.4 Adjustable parameter 795, bit 4

Table of contents

1 Fundamental safety instructions 11

1.1 General safety instructions 12

1.2 Industrial security 13

2 Parameters 15

2.1 Overview of parameters 16
2.1.1 Explanation of the parameter list 16
2.1.2 Number ranges of parameters 30

2.2 List of parameters 33

2.3 Parameters for data sets 698
2.3.1 Parameters for command data sets (CDS) 698
2.3.2 Parameters for drive data sets (DDS) 700
2.3.3 Parameters for encoder data sets (EDS) 704
2.3.4 Parameters for motor data sets (MDS) 705
2.3.5 Parameters for power unit data sets (PDS) 708

3 Function diagrams 709

3.1 Table of contents 710

3.2 Explanations on the function diagrams 717

3.3 Overviews 722

3.4 CU305 input/output terminals 732

3.5 PROFIdrive 740

3.6 Internal control/status words 777

3.7 Sequence control 790

3.8 Brake control 793

3.9 Safety Integrated 798

3.10 Setpoint channel 817

3.11 Setpoint channel not activated 826

3.12 Basic positioner (EPOS) 828

3.13 Position control 844

3.14 Encoder evaluation 849

3.15 Servo control 856

3.16 Technology functions 876

3.17 Free function blocks (FBLOCKS) 879

3.18 Technology controller 897

3.19 Signals and monitoring functions 902

3.20 Diagnostics . . . 908
3.21 Data sets . . . 914
3.22 CANopen interface . . . 919
3.23 Basic Operator Panel 20 (BOP20) . . . 926
4 Faults and alarms . . . 929
4.1 Overview of faults and alarms . . . 930
4.1.1 General information on faults and alarms . . . 930
4.1.2 Explanation of the list of faults and alarms . . . 934
4.1.3 Number ranges of faults and alarms . . . 937
4.2 List of faults and alarms . . . 939
A Appendix . . . 1213
A.1 ASCII table (characters that can be displayed) . . . 1214
A.2 List for motor code / encoder code . . . 1217
A.2.1 Motor code . . . 1217
A.2.2 Encoder code . . . 1245
A.3 List of abbreviations . . . 1247
Index . . . 1257

Fundamental safety instructions

1

Content

1.1	General safety instructions	12
1.2	Industrial security	13

1.1 General safety instructions

⚠ WARNING

Risk of death if the safety instructions and remaining risks are not carefully observed

If the safety instructions and residual risks are not carefully observed in the associated hardware documentation, accidents involving severe injuries or death can occur.

- Observe the safety instructions given in the hardware documentation.
- When assessing the risk, take into account residual risks.

⚠ WARNING

Danger to life or malfunctions of the machine as a result of incorrect or changed parameter assignment

Machines can malfunction as a result of incorrect or changed parameter assignment, which in turn can lead to injuries or death.

- Protect the parameterization (parameter assignments) against unauthorized access.
- Respond to possible malfunctions by applying suitable measures (e.g. EMERGENCY-STOP or EMERGENCY-OFF).

1.2 Industrial security

Note

Industrial security

Siemens provides products and solutions with industrial security functions that support the secure operation of plants, solutions, machines, devices, and/or networks. They are important components in a holistic industrial security concept. With this in mind, Siemens products and solutions undergo continuous development. Siemens recommends strongly that you regularly check for product updates.

To ensure that Siemens products and solutions are operated securely, suitable preventive measures (e.g. cell protection concept) and each component must be integrated into a state-of-the-art holistic industrial security concept. Any third-party products that may be in use must also be taken into account. You will find more information about industrial security at:

http://www.siemens.com/industrialsecurity

To receive information about product updates on a regular basis, register for our product newsletter. You will find more information at:

http://support.automation.siemens.com

⚠ WARNING

Danger due to unsafe operating states caused by software manipulation

Software manipulation (e.g. by viruses, Trojan horses, malware, worms) can cause unsafe operating states to develop in your installation which can result in death, severe injuries and/or material damage.

- Update your software regularly.

  You can find information and newsletters on this subject at:

  http://support.automation.siemens.com
- Integrate the automation and drive components into a holistic, state-of-the-art industrial security concept for the plant or machine.

  For more information, visit:

  http://www.siemens.com/industrialsecurity
- Make sure that you include all installed products into the holistic industrial security concept.

Parameters

2

Content

2.1	Overview of parameters	16
2.2	List of parameters	33
2.3	Parameters for data sets	698

2.1 Overview of parameters

2.1.1 Explanation of the parameter list

Basic structure of parameter descriptions

The data in the following example has been chosen at random. The table below contains all the information that can be included in a parameter description. Some of the information is optional.

The "List of parameters" (Page 33) has the following structure:

- - - - - - - - - - - - Start of example -

pxxxx[0...n] **BICO: Full parameter name / abbreviated name**

Drive object (function module)

Can be changed: C1(x), C2(x), U, T	**Calculated:** CALC_MOD_REG	**Access level:** 2
Data type: Unsigned32 / Integer16	**Dyn. index:** CDS, p0170	**Func. diagram:** 8070
P-Group: Closed-loop control	**Unit group:** 7_1	**Unit selection:** p0505
Not for motor type: FEM	**Scaling:** p2000	**Expert list:** 1
Min	**Max**	**Factory setting**
0.00 [Nm]	10.00 [Nm]	0.00 [Nm]

Description: Text

Values:
0: Name and meaning of value 0
1: Name and meaning of value 1
2: Name and meaning of value 2
etc.

Recommendation: Text

Index:
[0] = Name and meaning of index 0
[1] = Name and meaning of index 1
[2] = Name and meaning of index 2
etc.

Bit field:

Bit	Signal name	1 signal	0 signal	FP
00	Name and meaning of bit 0	Yes	No	8060
01	Name and meaning of bit 1	Yes	No	
02	Name and meaning of bit 2	Yes	No	8065
	etc.			

Dependency: Text
Refer to: pxxxx, rxxxx
Refer to: Fxxxxx, Axxxxx

Danger: **Warning:** **Caution:** Safety notices with a warning triangle

Caution: **Notice:** Safety notices without a warning triangle

Note: Information which might be useful

- - - - - - - - - - - - End of example -

The individual pieces of information are described in detail below.

pxxxx[0...n] Parameter number

The parameter number is made up of a "p" or "r", followed by the parameter number and the index (optional).

Examples of the representation in the parameter list:

- p… Adjustable parameters (read and write parameters)
- r… Display parameters (read only)
- p0918 Adjustable parameter 918
- p0099[0…3] Adjustable parameter 99, indices 0 to 3
- p1001[0…n] Adjustable parameter 1001, indices 0 to n (n = configurable)
- r0944 Display parameter 944
- r2129.0…15 Display parameter 2129 with bit field from bit 0 (smallest bit) to bit 15 (largest bit)

Other examples of the notation in the documentation:

- p1070[1] Adjustable parameter 1070, index 1
- p2098[1].3 Adjustable parameter 2098, index 1 bit 3
- r0945[2](3) Display parameter 945, index 2 of drive object 3
- p0795.4 Adjustable parameter 795, bit 4

The following applies to adjustable parameters:

The parameter value "when shipped" is specified under "Factory setting" with the relevant unit in square parentheses. The value can be adjusted within the range defined by "Min" and "Max".

The term "linked parameterization" is used in cases where changes to adjustable parameters affect the settings of other parameters.

Linked parameterization can occur, for example, as a result of the following actions or parameters:

- Executing macros

  p0015, p0700, p1000, p1500
- Setting the PROFIBUS telegram (BICO interconnection)

  p0922
- Setting component lists

  p0230, p0300, p0301, p0400
- Automatically calculating and pre-assigning

  p0340, p0578, p3900
- Restoring the factory settings

  p0970

The following applies to display parameters:

The fields "Min", "Max" and "Factory setting" are specified with a dash "-" and the relevant unit in square parentheses.

Note

The parameter list can contain parameters that are not visible in the expert lists of the particular commissioning software (e.g. parameters for trace functions).

BICO: Full parameter name / abbreviated name

The following abbreviations can appear in front of the parameter name:

- BI: Binector Input
  This parameter is used for selecting the source of a digital signal.
- BO: Binector Output
  This parameter is available as a digital signal for interconnection with other parameters.
- CI: Connector Input
  This parameter is used for selecting the source of an "analog" signal.
- CO: Connector Output
  This parameter is available as an “analog” signal for interconnection with other parameters.
- CO/BO: Connector/Binector Output
  This parameter is available as an "analog" and digital signal for interconnection with other parameters.

Note

A connector input (CI) cannot be interconnected with any connector output (CO, signal source).

When interconnecting a connector input using the commissioning software, only the signal sources that are actually possible are listed.

Drive object (function module)

A drive object (DO) is an independent, "self-contained" functional unit that has its own parameters and, in some cases, faults and alarms.

When carrying out commissioning using the commissioning software, you can select/deselect additional functions and their parameters by activating/deactivating function modules accordingly.

Note

References: /FH3/ SINAMICS S110 Function Manual

The parameter list specifies the associated drive object and function module for each individual parameter.

Example:

- p1070 CI: Main setpoint
  SERVO_S110 (ext setp)
  This parameter is available only for the SERVO_S110 drive object in conjunction with the "Extended setpoint channel" function module.

A parameter can belong to one, several, or all drive objects.

The following information relating to "Drive object" and "Function module" can be displayed under the parameter number:

Table 2-1 Data in the "Drive object (function module)" field

Drive object (function module)	Type	Meaning
All objects	-	This parameter is used by all drive objects.
CU	-	Control Unit, all versions.
CU_S110-CAN	1	SINAMICS S110 Control Unit with CAN interface.
CU_S110-DP	1	SINAMICS S110 Control Unit with PROFIBUS DP interface.
CU_S110-PN	1	SINAMICS S110 Control Unit with PROFINET interface.
SERVO_S110-CAN SERVO_S110-DP SERVO_S110-PN	11	S110 servo drive.
SERVO_S110-CAN (pos ctrl) SERVO_S110-DP (pos ctrl) SERVO_S110-PN (pos ctrl)	-	SINAMICS S110 servo drive with "Position control" function module (r0108.3).
SERVO_S110-CAN (EPOS) SERVO_S110-DP (EPOS) SERVO_S110-PN (EPOS)	-	SINAMICS S110 servo drive with "Basic positioner" function module (r0108.4).
SERVO_S110-CAN (extend. setp) SERVO_S110-DP (extend. setp) SERVO_S110-PN (extend. setp)	-	SINAMICS S110 servo drive with "Extended setpoint channel" function module (r0108.8).
SERVO_S110-CAN (Safety rotary) SERVO_S110-DP (Safety rotary) SERVO_S110-PN (Safety rotary)	-	SINAMICS S110 servo drive with "Safety rotary axis" function module (r0108.13).
SERVO_S110-CAN (ext. brake) SERVO_S110-DP (ext. brake) SERVO_S110-PN (ext. brake)	-	SINAMICS S110 servo drive with "Extended brake control" function module (r0108.14).
SERVO_S110-CAN (techn_ctrl) SERVO_S110-DP (techn_ctrl) SERVO_S110-PN (techn_ctrl)	-	SINAMICS S110 servo drive with "Technology controller" function module (r0108.16).
SERVO_S110-CAN (ext. msg) SERVO_S110-DP (ext. msg) SERVO_S110-PN (ext. msg)	-	SINAMICS S110 servo drive with "Extended messages/monitoring functions" function module (r0108.17).
SERVO_S110-CAN (FBLOCKS) SERVO_S110-DP (FBLOCKS) SERVO_S110-PN (FBLOCKS)	-	SINAMICS S110 servo drive with "Free function blocks" function module (r0108.18).

Note

The drive object type is used to identify the drive objects in the drive system (e. g. r0107, r0975[1]).

Can be changed

The "-" sign indicates that the parameter can be changed in any object state and that the change will be effective immediately.

The information "C1(x), C2(x), T, U" ((x): optional) means that the parameter can be changed only in the specified drive unit state and that the change will not take effect until the unit switches to another state. This can be a single state or multiple states.

The following states are available:

- C1(x) Device commissioning C1: **C**ommissioning **1**

  Device is being commissioned (p0009 > 0).

  Pulses cannot be enabled.

  The parameter can only be changed for the following device commissioning settings (p0009 > 0):

  - C1: Can be changed for all settings p0009 > 0.
  - C1(x): Can be changed only when p0009 = x.

  A modified parameter value does not take effect until the device commissioning mode is exited with p0009 = 0.

- C2(x) Drive object commissioning C2: **C**ommissioning **2**

  Drive commissioning is in progress (p0009 = 0 and p0010 > 0).

  Pulses cannot be enabled.

  The parameter can only be changed in the following drive commissioning settings (p0010 > 0):

  - C2: Can be changed for all settings p0010 > 0.
  - C2(x): Can only be changed for the settings p0010 = x.

  A modified parameter value does not take effect until drive commissioning mode is exited with p0010 = 0.

- U Operation U: R**u**n

  Pulses are enabled.

- T Ready T: Ready **t**o run

  The pulses are not enabled and the state "C1(x)" or "C2(x)" is not active.

Note

Parameter p0009 is CU-specific (belongs to the Control Unit).

Parameter p0010 is drive-specific (belongs to each drive object).

The operating state of individual drive objects is displayed in r0002.

Calculated

Specifies whether the parameter is influenced by automatic calculations.

The calculation attribute defines which activities influence the parameter.

The following attributes apply:

- CALC_MOD_ALL
  - p0340 = 1
  - Project download with commissioning software and send from p0340 = 3
- CALC_MOD_CON
  - p0340 = 1, 3, 4
- CALC_MOD_EQU
  - p0340 = 1, 2
- CALC_MOD_LIM_REF
  - p0340 = 1, 3, 5
  - p0578 = 1
- CALC_MOD_REG
  - p0340 = 1, 3

Note

For p3900 > 0, p0340 = 1 is also called automatically.

After p1910 = 1, p0340 = 3 is also automatically called.

Access level

Specifies the minimum access level required to be able to display and change the relevant parameter. The required access level can be set using p0003.

The system uses the following access levels:

- 1: Standard
- 2: Extended
- 3: Expert
- 4: Service

  Parameters with this access level are password protected.

Note

Parameter p0003 is CU-specific (belongs to the Control Unit).

A higher access level will also include the functions of the lower levels.

Data type

The information on the data type can consist of the following two items (separated by a slash):

- First item

  Data type of the parameter.
- Second item (for binector or connector input only)

  Data type of the signal source to be interconnected (binector/connector output).

Parameters can have the following data types:

- Integer8 I8 8-bit integer number
- Integer16 I16 16-bit integer number
- Integer32 I32 32-bit integer number
- Unsigned8 U8 8 bits without sign
- Unsigned16 U16 16 bits without sign
- Unsigned32 U32 32 bits without sign
- FloatingPoint32 Float 32-bit floating point number

Depending on the data type of the BICO input parameter (signal sink) and BICO output parameter (signal source), the following combinations are possible when creating BICO interconnections:

Table 2-2 Possible combinations of BICO interconnections

	BICO input parameter			
	CI parameter			**BI parameter**
BICO output parameter	**Unsigned32 / Integer16**	**Unsigned32 / Integer32**	**Unsigned32 / FloatingPoint32**	**Unsigned32 / Binary**
CO: Unsigned8	x	x	–	–
CO: Unsigned16	x	x	–	–
CO: Integer16	x	x	r2050, r8850	–
CO: Unsigned32	x	x	–	–
CO: Integer32	x	x	r2060, r8860	–
CO: FloatingPoint32	x	x	x	–
BO: Unsigned8	–	–	–	x
BO: Unsigned16	–	–	–	x
BO: Integer16	–	–	–	x
BO: Unsigned32	–	–	–	x
BO: Integer32	–	–	–	x
BO: FloatingPoint32	–	–	–	–

Legend:
x : BICO interconnection permitted
–: BICO interconnection not permitted
rxxxx: BICO interconnection is only permitted for the specified CO parameters

Dynamic index

For parameters with a dynamic index [0...n], the following information is specified here:

- Data set (if available).
- Parameter for the number of indices (n = number - 1).

The following information can be contained in this field:

- “CDS, p0170” (Command Data Set, CDS count)

  Example:

  p1070[0] → main setpoint [command data set 0]

  p1070[1] → main setpoint [command data set 1], etc.
- “DDS, p0180” (Drive Data Set, DDS count)
- “EDS, p0140” (Encoder Data Set, EDS count)
- "MDS, p0130" (Motor Data Set, MDS count)
- "PDS, p0120" (Power unit Data Set, PDS count)
- "p2615" (traversing blocks count)

Note

Information on the data sets can be taken from the following references:

References: /FH3/	SINAMICS S110 Function Manual Chapter "Data Sets"

Function diagram

The parameter is included in this function diagram. The structure of the parameter function and its relationship with other parameters is shown in the specified function diagram.

Example:

Function block diagram: 3060.3	3060:	Function block diagram number
	3:	Signal path (optional)

P-Group (only when accessing via BOP (Basic Operator Panel))

Specifies the functional group to which this parameter belongs. The required parameter group can be set via p0004.

Note

Parameter p0004 is CU-specific (belongs to the Control Unit).

Unit, unit group and unit selection

The standard unit of a parameter is specified in square parentheses after the values for "Min", "Max", and "Factory setting".

For parameters where the unit can be switched over, the specifications for "Unit group" and "Unit selection" determine the group to which this parameter belongs and with which parameter the unit can be changed over.

Example:

Unit group: 7_1, unit selection: p0505

The parameter belongs to unit group 7_1 and the unit can be changed over using p0505.

Note

Detailed information on changing over units can be found in the following references:

References: /FH3/ SINAMICS S110 Function Manual Drive Functions

All the potential unit groups and possible unit selections are listed below.

Table 2-3 Unit groups (p0100)

Unit group	Unit selection for p0100 =		Reference variable for %
	0	1	
7_4	Nm	lbf ft	-
8_4	N	lbf	-
14_2	W	HP	-
14_6	kW	HP	-
25_1	kgm^2	lb ft^2	-
27_1	kg	lb	-
28_1	Nm/A	lbf ft/A	-
29_1	N/Arms	lbf/Arms	-
30_1	m	ft	-

Table 2-4 Unit groups (p0349)

Unit group	Unit selection for p0349 =		Reference variable for %
	1	2	
15_1	mH	%	$\frac{1000 \cdot p0304}{2 \cdot \pi \cdot \sqrt{3} \cdot p0305 \cdot p0310}$
16_1	Ohm	%	$\frac{p0304}{\sqrt{3} \cdot p0305}$

Table 2-5 Unit groups (p0505)

Unit group	Unit selection for p0505 =				Reference variable for %
	1	2	3	4	
2_1	Hz	%	Hz	%	p2000
2_2	kHz	%	kHz	%	p2000
3_1	1/min	%	1/min	%	p2000
4_1	m/min (ft/min)	%	ft/min	%	p2000
4_2	m/min (ft/min)	m/min (ft/min)	ft/min	ft/min	-
5_1	Vrms	%	Vrms	%	p2001
5_2	V	%	V	%	p2001
5_3	V	%	V	%	p2001
6_1	mArms	%	mArms	%	p2002
6_2	Arms	%	Arms	%	p2002
6_3	mA	%	mA	%	p2002
6_4	O	%	O	%	p2002
6_5	O	%	O	%	p2002
7_1	Nm	%	lbf ft	%	p2003
7_2	Nm	Nm	lbf ft	lbf ft	-
7_3	Nm	%	lbf ft	%	1.0
8_1	N	%	lbf	%	p2003
8_2	N	N	lbf	lbf	-
8_3	N	%	lbf	%	1.0
14_1	W	%	HP	%	r2004 (drive)
14_3	W	%	HP	%	r2004 (infeed)
14_4	W	%	HP	%	r2004 (drive)
14_5	kW	%	HP	%	r2004 (drive)
14_7	kW	%	HP	%	r2004 (infeed)
14_8	kW	%	HP	%	r2004 (drive)
14_9	W	W	HP	HP	-
14_10	kW	kW	HP	HP	-
14_11	var	%	var	%	r2004
14_12	kvar	%	kvar	%	r2004
17_1	Nms/rad	%	lbf ft s/rad	%	p2003/p2000
18_1	V/A	%	V/A	%	p2001/p2002
19_1	A/V	%	A/V	%	p2002/p2001
21_1	°C	°C	°F	°F	-

Table 2-5 Unit groups (p0505), continued

Unit group	Unit selection for p0505 =				Reference variable for %
	1	2	3	4	
21_2	K	K	°F	°F	-
22_1	m/s^2	m/s^2	ft/s^2	ft/s^2	-
22_2	m/s^2	%	ft/s^2	%	p2007
23_1	Vrms s/m	Vrms s/m	Vrms s/ft	Vrms s/ft	-
24_1	Ns/m	Ns/m	lbf s/ft	lbf s/ft	-
24_2	Ns/m	%	lbf s/ft	%	p2003/p2000
26_1	m/s^3	m/s^3	ft/s^3	ft/s^3	-
39_1	$1/s^2$	%	$1/s^2$	%	p2007

Table 2-6 Unit group (p0595)

Unit group	Unit selection for p0595 =		Reference variable for %
	Value	Unit	
9_1	The values that can be set and the technological units are shown in p0595.		

Parameter values

Min — Minimum value of the parameter [unit]

Max — Maximum value of the parameter [unit]

Factory setting — Value when delivered [unit]

In the case of a binector/connector input, the signal source of the default BICO interconnection is specified. A non-indexed connector output is assigned the index [0].

A different value may be displayed for certain parameters (e .g. p1800) at the initial commissioning stage or when establishing the factory settings.
Reason:
The setting of these parameters is determined by the operating environment of the Control Unit (e. g. depending on converter type, macro, power unit).

Not for motor type

Specifies for which motor type this parameter has no significance.

Ind. motor : Asynchronous Motor

PMSM : Permanent-magnetized-excited synchronous motor

REL : Reluctance motor textiles / SIEMOSYN motor

SESM : Separately-excited synchronous motor

Normalization

Specification of the reference variable with which a signal value is automatically converted for a BICO interconnection.

The following reference variables are available:

- p2000 … p2007: Reference speed, reference voltage, etc.
- PERCENT: 1.0 = 100 %
- 4000H: 4000 hex = 100 %

Expert list

Specifies whether this parameter is available in the expert list of the specified drive objects in the commissioning software.

1: Parameter exists in the expert list.

0: Parameter does not exist in the expert list.

NOTICE
Users are responsible for using parameters that are marked "Expert list: 0" (parameter not included in the expert list). These parameters and their functionalities have not been tested and no further user documentation is available for them (e. g. description of functions). Moreover, "Technical Support" (hotline) does not provide any support for these parameters.

Description

Explanation of a parameter function.

Values

Lists the possible values of a parameter

Recommendation

Information about recommended settings.

Index

The name and meaning of each individual index is specified for indexed parameters.

The following applies to the values (Min, Max, Factory setting) of indexed adjustable parameters:

- Min, Max:

  The adjustment range and unit apply to all indices.

- Factory setting:

  When all indices have the same factory setting, index 0 is specified with the unit to represent all indices.

  When the indices have different factory settings, they are all listed individually with the unit.

Bit field

For parameters with bit fields, the following information is provided about each bit:

- Bit number and signal name
- Meaning for signal states 0 and 1
- Function block diagram (optional)

  The signal is shown on this function diagram.

Dependency

Conditions that must be fulfilled in conjunction with this parameter. Also includes special effects that can occur between this parameter and others.

See also: List of other parameters to be additionally considered.

Safety instructions

Important information that must be observed to avoid the risk of injury or material damage.

Information that must be observed to avoid any problems.

Information that the user may find useful.

Danger	The description of this safety notice can be found at the beginning of this manual, see "Legal information" (Page 4).
Warning	The description of this safety notice can be found at the beginning of this manual, see "Legal information" (Page 4).
Caution	The description of this safety notice can be found at the beginning of this manual, see "Legal information" (Page 4).
Caution	The description of this safety notice can be found at the beginning of this manual, see "Legal information" (Page 4).
Notice	The description of this safety notice can be found at the beginning of this manual, see "Legal information" (Page 4).
Note	Information that the user may find useful.

2.1.2 Number ranges of parameters

Note

The following number ranges represent an overview for all the parameters available for the SINAMICS drive family.

The parameters for the product described in this List Manual are described in detail in "List of parameters" (Page 33).

Parameters are grouped into the following number ranges:

Table 2-7 Number ranges for SINAMICS

Range		Description
From	To	
0000	0099	Display and operation
0100	0199	Commissioning
0200	0299	Power section
0300	0399	Motor
0400	0499	Encoder
0500	0599	Technology and units, motor-specific data, probes
0600	0699	Thermal monitoring, maximum current, operating hours, motor data, central probe
0700	0799	Control Unit terminals, measuring sockets
0800	0839	CDS, DDS data sets, motor changeover
0840	0879	Sequence control (e.g. signal source for ON/OFF1)
0880	0899	ESR, parking, control and status words
0900	0999	PROFIBUS/PROFIdrive
1000	1199	Setpoint channel (e.g. ramp-function generator)
1200	1299	Functions (e.g. motor holding brake)
1300	1399	U/f control
1400	1799	Closed-loop control
1800	1899	Gating unit
1900	1999	Power unit and motor identification
2000	2009	Reference values
2010	2099	Communication (fieldbus)
2100	2139	Faults and alarms
2140	2199	Signals and monitoring
2200	2359	Technology controller
2360	2399	Staging, hibernation
2500	2699	Position control (LR) and basic positioning (EPOS)
2700	2719	Reference values, display

Table 2-7 Number ranges for SINAMICS, continued

Range		Description
From	To	
2720	2729	Load gearbox
2800	2819	Logic operations
2900	2930	Fixed values (e. g. percentage, torque)
3000	3099	Motor identification results
3100	3109	Real-time clock (RTC)
3110	3199	Faults and alarms
3200	3299	Signals and monitoring
3400	3659	Infeed closed-loop control
3660	3699	Voltage Sensing Module (VSM), Braking Module internal
3700	3779	Advanced Positioning Control (APC)
3780	3819	Synchronization
3820	3849	Friction characteristic
3850	3899	Functions (e. g. long stator)
3900	3999	Management
4000	4599	Terminal Board, Terminal Module (e. g. TB30, TM31)
4600	4699	Sensor Module
4700	4799	Trace
4800	4849	Function generator
4950	4999	OA application
5000	5169	Spindle diagnostics
5200	5230	Current setpoint filter 5 ... 10 (r0108.21)
5400	5499	System droop control (e. g. shaft generator)
5500	5599	Dynamic grid support (solar)
5600	5614	PROFIenergy
5900	6999	SINAMICS GM/SM/GL/SL
7000	7499	Parallel connection of power units
7500	7599	SINAMICS SM120
7700	7729	External messages
7770	7789	NVRAM, system parameters
7800	7839	EEPROM read/write parameters
7840	8399	Internal system parameters
8400	8449	Real-time clock (RTC)
8500	8599	Data and macro management
8600	8799	CAN bus
8800	8899	Communication Board Ethernet (CBE), PROFIdrive

Table 2-7 Number ranges for SINAMICS, continued

Range		Description
From	To	
8900	8999	Industrial Ethernet, PROFINET, CBE20
9000	9299	topology
9300	9399	Safety Integrated
9400	9499	Parameter consistency and storage
9500	9899	Safety Integrated
9900	9949	topology
9950	9999	Diagnostics, internal
10000	10199	Safety Integrated
11000	11299	Free technology controller 0, 1, 2
20000	20999	Free function blocks (FBLOCKS)
21000	25999	Drive Control Chart (DCC)
50000	53999	SINAMICS DC MASTER (closed-loop DC current control)
61000	61001	PROFINET

2.2 List of parameters

Product: S110, Version: 4403900, Language: eng
Objects: CU_S110-CAN, CU_S110-DP, CU_S110-PN, SERVO_S110-CAN, SERVO_S110-DP, SERVO_S110-PN

r0002 Control Unit operating display / CU op_display

CU_S110-DP, CU_S110-CAN, CU_S110-PN

Can be changed: -	**Calculated:** -	**Access level:** 1
Data type: Integer16	**Dyn. index:** -	**Func. diagram:** -
P-Group: -	**Unit group:** -	**Unit selection:** -
Not for motor type: -	**Scaling:** -	**Expert list:** 1
Min	**Max**	**Factory setting**
0	99	-

Description: Operating display for the Control Unit (CU).

Value:
0: Operation
10: Ready
20: Wait for run-up
25: Wait for automatic FW update of DRIVE-CLiQ components
31: Commissioning software download active
33: Remove/acknowledge topology error
34: Exit commissioning mode
35: Carry out first commissioning
70: Initialization
80: Reset active
99: Internal software error

Notice: For several missing enable signals, the corresponding value with the highest number is displayed.

r0002 Drive operating display / Drv op_display

SERVO_S110-DP, SERVO_S110-CAN, SERVO_S110-PN

Can be changed: -	**Calculated:** -	**Access level:** 1
Data type: Integer16	**Dyn. index:** -	**Func. diagram:** -
P-Group: -	**Unit group:** -	**Unit selection:** -
Not for motor type: -	**Scaling:** -	**Expert list:** 1
Min	**Max**	**Factory setting**
0	250	-

Description: Operating display for the drive.

Value:
0: Operation - everything enabled
10: Operation - set "enable setpoint" = "1" (p1142, p1152)
11: Operation - set "enable speed controller" = "1" (p0856)
12: Operation - RFG frozen, set "RFG start" = "1" (p1141)
13: Operation - set "enable RFG" = "1" (p1140)
14: Oper. - MotID, excit. running and/or brake opens, SS2, SOS
15: Operation - open brake (p1215)
16: Operation - withdraw braking with OFF1 using "ON/OFF1" = "1"
17: Operation - braking with OFF3 can only be interrupted with OFF2
18: Operation - brake on fault, remove fault, acknowledge
19: Operation - armature short-circ./DC brake act. (p1230, p1231)
21: Ready for operation - set "Operation enable" = "1" (p0852)
22: Ready for operation - de-magnetizing running (p0347)
23: Ready for operation - set "Infeed operation" = "1" (p0864)
31: Ready for switching on - set "ON/OFF1" = "0/1" (p0840)
35: Switching on inhibited - carry out first commissioning (p0010)
41: Switching on inhibited - set "ON/OFF1" = "0" (p0840)
42: Switching on inhibited - set "OC/OFF2" = "1" (p0844, p0845)
43: Switching on inhibited - set "OC/OFF3" = "1" (p0848, p0849)
44: Switching on inhibited - connect 24 V to terminal EP (hardware)
45: Switching on inhibited - rectify fault, acknowledge fault, STO
46: Switching on inhibited - exit comm mode (p0009, p0010)
60: Drive object de-activated/not operational
70: Initialization
200: Wait for booting/partial booting
250: Device signals a topology error

Dependency: Refer to: r0046

Notice: For several missing enable signals, the corresponding value with the highest number is displayed.

Note: OC: Operating condition
EP: Enable Pulses (pulse enable)
RFG: Ramp-function generator
COMM: Commissioning
MotID: Motor data identification
SS2: Safe Stop 2
SOS: Safe Operating Stop
STO: Safe Torque Off

p0003 BOP access level / BOP acc_level

CU_S110-DP, CU_S110-CAN, CU_S110-PN

Can be changed: C1, U, T	**Calculated:** -	**Access level:** 1
Data type: Integer16	**Dyn. index:** -	**Func. diagram:** -
P-Group: -	**Unit group:** -	**Unit selection:** -
Not for motor type: -	**Scaling:** -	**Expert list:** 1
Min	**Max**	**Factory setting**
1	4	1

Description: Sets the access level for reading and writing parameters via the Basic Operator Panel (BOP).

Value:
1: Standard
2: Extended
3: Expert
4: Service

Note: Access level 0 (user-defined):
Parameters from the user-defined list (p0013). Not used as of firmware version 2.6 (p0016).
Access level 1 (standard):
Parameters for the simplest operator control possibility (e.g. p1120 = ramp-function generator, ramp-up time).
Access level 2 (extended):
Parameters to operate the basic functions of the drive unit.
Access level 3 (experts):
Expert know-how is required for these parameters (e.g. BICO parameterization).
Access level 4 (service):
For these parameters, it is necessary that authorized service personnel enter the appropriate password (p3950).

p0005[0...1] BOP operating display selection / BOP op_disp sel

CU_S110-DP, CU_S110-CAN, CU_S110-PN, SERVO_S110-DP, SERVO_S110-CAN, SERVO_S110-PN

Can be changed: U, T	**Calculated:** -	**Access level:** 2
Data type: Unsigned16	**Dyn. index:** -	**Func. diagram:** -
P-Group: -	**Unit group:** -	**Unit selection:** -
Not for motor type: -	**Scaling:** -	**Expert list:** 1
Min	**Max**	**Factory setting**
0	65535	[0] 2 [1] 0

Description: Sets the parameter number and parameter index for display for p0006 = 2, 4 for the Basic Operator Panel (BOP).
Examples for the SERVO drive object:
p0005[0] = 21, p0005[1] = 0: Actual speed smoothed (r0021)
p0005[0] = 25, p0005[1] = 0: Output voltage smoothed (r0025)

Index: [0] = Parameter number
[1] = Parameter index

Dependency: Refer to: p0006

Note: Procedure:

1.

The parameter number to be displayed should be set in index 0. Only the monitoring parameters (read-only parameters) can be set that actually exist for the actual drive object.

If the set parameter number is not indexed, or if there is an index in index 1 that lies outside the valid range of the set parameter, then index 1 is automatically set to 0.

2.

The index that belongs to the parameter set in index 0 should be set in index 1. The permissible changes in index 1 always depend on the parameter number set in index 0.

p0006 BOP operating display mode / BOP op_ disp mode

CU_S110-DP, CU_S110-CAN, CU_S110-PN

Can be changed: U, T	**Calculated:** -	**Access level:** 3
Data type: Integer16	**Dyn. index:** -	**Func. diagram:** -
P-Group: -	**Unit group:** -	**Unit selection:** -
Not for motor type: -	**Scaling:** -	**Expert list:** 1
Min	**Max**	**Factory setting**
4	4	4

Description: Sets the mode of the operating display for the Basic Operator Panel (BOP) in the operating states "ready for operation" and "operation".

Value: 4: p0005

Dependency: Refer to: p0005

Note: Mode 0 ... 3 can only be selected if also r0020, r0021 are available on the drive object.

Mode 4 is available for all drive objects.

p0006 BOP operating display mode / BOP op_ disp mode

SERVO_S110-DP, SERVO_S110-CAN, SERVO_S110-PN

Can be changed: U, T	**Calculated:** -	**Access level:** 3
Data type: Integer16	**Dyn. index:** -	**Func. diagram:** -
P-Group: -	**Unit group:** -	**Unit selection:** -
Not for motor type: -	**Scaling:** -	**Expert list:** 1
Min	**Max**	**Factory setting**
0	4	4

Description: Sets the mode of the operating display for the Basic Operator Panel (BOP) in the operating states "ready for operation" and "operation".

Value:
0: Operation --> r0021, otherwise r0020 <--> r0021
1: Operation --> r0021, otherwise r0020
2: Operation --> p0005, otherwise p0005 <--> r0020
3: Operation --> r0002, otherwise r0002 <--> r0020
4: p0005

Dependency: Refer to: p0005

Note: Mode 0 ... 3 can only be selected if also r0020, r0021 are available on the drive object.

Mode 4 is available for all drive objects.

p0007 BOP background lighting / BOP lighting

CU_S110-DP, CU_S110-CAN, CU_S110-PN

Can be changed: U, T	**Calculated:** -	**Access level:** 3
Data type: Unsigned32	**Dyn. index:** -	**Func. diagram:** -
P-Group: -	**Unit group:** -	**Unit selection:** -
Not for motor type: -	**Scaling:** -	**Expert list:** 1
Min	**Max**	**Factory setting**
0 [s]	2000 [s]	0 [s]

Description: Sets the delay time until the background lighting of the Basic Operator Panel (BOP) is switched off.

If no keys are actuated, then the background lighting automatically switches itself off after this time has expired.

Note: p0007 = 0: Background lighting is always switched on (factory setting).

p0008 BOP drive object after booting / BOP DO after boot

CU_S110-DP, CU_S110-CAN, CU_S110-PN

Can be changed: U, T	**Calculated:** -	**Access level:** 3
Data type: Unsigned16	**Dyn. index:** -	**Func. diagram:** -
P-Group: -	**Unit group:** -	**Unit selection:** -
Not for motor type: -	**Scaling:** -	**Expert list:** 1
Min	**Max**	**Factory setting**
1	65535	2

Description: Sets the required drive object that is active at the Basic Operator Panel (BOP) after booting.

Note: The value from p0008 initializes the display on the Basic Operator Panel (BOP) at the top left after booting.

The drive object Control Unit is selected using the value 1.

p0009 Device commissioning parameter filter / Dev comm par_filt

CU_S110-DP, CU_S110-CAN, CU_S110-PN

Can be changed: C1, T	**Calculated:** -	**Access level:** 1
Data type: Integer16	**Dyn. index:** -	**Func. diagram:** -
P-Group: -	**Unit group:** -	**Unit selection:** -
Not for motor type: -	**Scaling:** -	**Expert list:** 1
Min	**Max**	**Factory setting**
0	149	1

Description: Sets the device and basic drive commissioning.

By appropriately setting this parameter, those parameters are filtered that can be written into in the various commissioning steps.

Value:

0: Ready
1: Device configuration
2: Defining the drive type/function module
3: Drive base configuration
4: Data set base configuration
29: Device download
30: Parameter reset
115: Parameter download
129: Only Siemens int
149: Only Siemens int

Note: The drives can only be powered up outside the device commissioning (the inverter enabled). In this case, p0009 must be 0 (Ready) and the individual drive objects must have already gone into operation (p0010).

p0009 = 1: Device configuration

At the first commissioning of the device, after booting, the device is in the "device configuration" state. To start the internal automatic first commissioning of the drive unit, p0009 should be set to 0 (Ready) after the ID for the actual topology (r0098) was transferred into the ID for the target topology (p0099). To do this, it is sufficient to set a single index value of p0099[x] the same as r0098[x]. Before the device has been completely commissioned, no other parameter can be changed. After the first commissioning was carried out, in this state, when required, other basic device configuration parameters can be adapted (e.g. the basic sampling time in p0110).

p0009 = 2: Defines the drive type / function module

In this state, the drive object types and/or the function modules can be changed or selected for the individual drive objects. To do this, the drive object type can be set using p0107[0...15] and the function can be set using p0108[0...15] (refer to p0101[0...15]).

p0009 = 3: Drive basic configuration

In this state, after the device has been commissioned for the first time, basic changes can be made for the individual drive objects (e.g. sampling times in p0111, p0112, p0115 and the number of data sets in p0120, p0130, p0140, p0170, p0180).

p0009 = 4: Data set basic configuration

In this state, after the device has been commissioned for the first time, for the individual drive objects changes can be made regarding the assignment of the components (p0121, p0131, p0141, p0151, p0161) to the individual data sets and the assignment of the power unit, motor and encoder to the drive data sets (p0185, ...).

p0009 = 29: Device download

If a download is made using the commissioning software, the device is automatically brought into this state. After the download has been completed, p0009 is automatically set to 0 (ready). It is not possible to manually set p0009 to this value.

p0009 = 30: Parameter reset

In order to bring the complete unit into the "first commissioning" state or to load the parameters saved using p0977, to start, p0009 must be set to this value. p0976 can then be changed to the required value.

p0009 = 115: Parameter download

This state allows the complete device and drive commissioning using the parameter services.

p0010 Drive commissioning parameter filter / Drv comm. par_filt

SERVO_S110-DP, SERVO_S110-CAN, SERVO_S110-PN

Can be changed: C2(1), T	**Calculated:** -	**Access level:** 1
Data type: Integer16	**Dyn. index:** -	**Func. diagram:** 2800, 2846
P-Group: -	**Unit group:** -	**Unit selection:** -
Not for motor type: -	**Scaling:** -	**Expert list:** 1
Min	**Max**	**Factory setting**
0	10000	1

Description: Sets the parameter filter to commission a drive.

Setting this parameter filters out the parameters that can be written into in the various commissioning steps.

Value:
0: Ready
1: Quick commissioning
2: Power unit commissioning
3: Motor commissioning
4: Encoder commissioning
5: Technological application/units
15: Data sets
17: Basic positioner commissioning
25: Position control commissioning
29: Only Siemens int
30: Parameter reset
95: Safety Integrated commissioning
10000: Ready with immediate feedback signal

Notice: For p0010 = 10000 the following applies:

It is not possible to modify parameters after changing the value.

Note: The drive can only be powered up outside the drive commissioning (inverter enable). To realize this, this parameter must be set to 0.

By setting p3900 to a value other than 0, the quick commissioning is completed, and this parameter is automatically reset to 0.

Procedure for "Reset parameter": Set p0010 to 30 and p0970 to 1.

p0010 = 10000 corresponds to p0010 = 0. Unlike with p0010 = 0, the parameter modification is applied immediately and the calculations are made in the background. Further parameter modifications cannot be made while the calculations are being performed.

p0015 Macro drive unit / Macro drv unit

CU_S110-DP, CU_S110-CAN, CU_S110-PN

Can be changed: C1	**Calculated:** -	**Access level:** 1
Data type: Unsigned32	**Dyn. index:** -	**Func. diagram:** -
P-Group: -	**Unit group:** -	**Unit selection:** -
Not for motor type: -	**Scaling:** -	**Expert list:** 1
Min	**Max**	**Factory setting**
0	999999	1

Description: Runs the corresponding macro files.

The selected macro file must be available on the memory card/device memory.

Example:

p0015 = 6 --> the macro file PM000006.ACX is run.

Caution: When executing a specific macro, the corresponding programmed settings are made and become active.

Notice: It is not possible to modify parameters after changing the value.

Note: The macros in the specified directory are displayed in r8570. r8570 is not in the expert list of the commissioning software.

Macros available as standard are described in the technical documentation of the particular product.

The parameter is not influenced by setting the factory setting.

p0015 Macro drive object / Macro DO

SERVO_S110-DP, SERVO_S110-CAN, SERVO_S110-PN

Can be changed: C2(1)	**Calculated:** -	**Access level:** 1
Data type: Unsigned32	**Dyn. index:** -	**Func. diagram:** -
P-Group: Commands	**Unit group:** -	**Unit selection:** -
Not for motor type: -	**Scaling:** -	**Expert list:** 1
Min	**Max**	**Factory setting**
0	999999	0

Description: Runs the corresponding macro files.
The selected macro file must be available on the memory card/device memory.
Example:
p0015 = 6 --> the macro file PM000006.ACX is run.

Caution: When executing a specific macro, the corresponding programmed settings are made and become active.

Notice: It is not possible to modify parameters after changing the value.
No errors were issued during quick commissioning (p3900 = 1) when writing to parameters of the QUICK_IBN group!

Note: The macros in the specified directory are displayed in r8570. r8570 is not in the expert list of the commissioning software.
Macros available as standard are described in the technical documentation of the particular product.
The parameter is not influenced by setting the factory setting.

r0018 Control Unit firmware version / CU FW version

CU_S110-DP, CU_S110-CAN, CU_S110-PN

Can be changed: -	**Calculated:** -	**Access level:** 1
Data type: Unsigned32	**Dyn. index:** -	**Func. diagram:** -
P-Group: -	**Unit group:** -	**Unit selection:** -
Not for motor type: -	**Scaling:** -	**Expert list:** 1
Min	**Max**	**Factory setting**
0	4294967295	-

Description: Displays the firmware version of the Control Unit.

Dependency: Refer to: r0128, r0148, r0197, r0198

Note: Example:
The value 1010100 should be interpreted as V01.01.01.00.

r0019.0...14 CO/BO: Control word BOP / STW BOP

CU_S110-DP, CU_S110-CAN, CU_S110-PN

Can be changed: -	**Calculated:** -	**Access level:** 3
Data type: Unsigned16	**Dyn. index:** -	**Func. diagram:** 9912
P-Group: Displays, signals	**Unit group:** -	**Unit selection:** -
Not for motor type: -	**Scaling:** -	**Expert list:** 1
Min	**Max**	**Factory setting**
-	-	-

Description: Displays the control word for the Basic Operator Panel (BOP).

Bit field:

Bit	Signal name	1 signal	0 signal	FP
00	ON / OFF (OFF1)	ON	OFF (OFF1)	-
01	No coast-down / coast-down (OFF2)	No coast down	Coast down (OFF2)	-
02	No Quick Stop / Quick Stop (OFF3)	No Quick Stop	Quick Stop (OFF3)	-
07	Acknowledge fault (0 -> 1)	Yes	No	-
13	Motorized potentiometer raise	Yes	No	-
14	Motorized potentiometer lower	Yes	No	-

r0020 Speed setpoint smoothed / n_set smth

SERVO_S110-DP, SERVO_S110-CAN, SERVO_S110-PN

Can be changed: -	**Calculated:** -	**Access level:** 2
Data type: FloatingPoint32	**Dyn. index:** -	**Func. diagram:** 5020, 6799
P-Group: Displays, signals	**Unit group:** 3_1	**Unit selection:** p0505
Not for motor type: -	**Scaling:** p2000	**Expert list:** 1
Min	**Max**	**Factory setting**
- [rpm]	- [rpm]	- [rpm]

Description: Displays the currently smoothed speed setpoint at the input of the speed controller or U/f characteristic (after the interpolator).

Dependency: Refer to: r0060

Note: Smoothing time constant = 100 ms
The signal is not suitable as a process quantity and may only be used as a display quantity.
The speed setpoint is available smoothed (r0020) and unsmoothed (r0060).

r0021 CO: Actual speed smoothed / n_act smooth

SERVO_S110-DP, SERVO_S110-CAN, SERVO_S110-PN

Can be changed: -	**Calculated:** -	**Access level:** 2
Data type: FloatingPoint32	**Dyn. index:** -	**Func. diagram:** 1580, 1680, 4710, 6799
P-Group: Displays, signals	**Unit group:** 3_1	**Unit selection:** p0505
Not for motor type: -	**Scaling:** p2000	**Expert list:** 1
Min	**Max**	**Factory setting**
- [rpm]	- [rpm]	- [rpm]

Description: Displays the smoothed actual value of the motor speed.

Dependency: Refer to: r0022, r0063

Note: Smoothing time constant = 100 ms
The signal is not suitable as a process quantity and may only be used as a display quantity.
The speed actual value is available smoothed (r0021, r0022) and unsmoothed (r0063).

r0022 Speed actual value rpm smoothed / n_act rpm smooth

SERVO_S110-DP, SERVO_S110-CAN, SERVO_S110-PN

Can be changed: -	**Calculated:** -	**Access level:** 2
Data type: FloatingPoint32	**Dyn. index:** -	**Func. diagram:** 1580, 1680, 4710, 6799
P-Group: Displays, signals	**Unit group:** -	**Unit selection:** -
Not for motor type: -	**Scaling:** p2000	**Expert list:** 1
Min	**Max**	**Factory setting**
- [rpm]	- [rpm]	- [rpm]

Description: Displays the smoothed actual value of the motor speed.
r0022 is identical to r0021, however, it always has units of rpm and contrary to r0021 cannot be changed over.

Dependency: Refer to: r0021, r0063

Note: Smoothing time constant = 100 ms
The signal is not suitable as a process quantity and may only be used as a display quantity.
The speed actual value is available smoothed (r0021, r0022) and unsmoothed (r0063).

r0024 Output frequency smoothed / f_outp smooth

SERVO_S110-DP, SERVO_S110-CAN, SERVO_S110-PN

Can be changed: -	**Calculated:** -	**Access level:** 3
Data type: FloatingPoint32	**Dyn. index:** -	**Func. diagram:** 1690, 5300, 5730, 6799
P-Group: Displays, signals	**Unit group:** -	**Unit selection:** -
Not for motor type: -	**Scaling:** p2000	**Expert list:** 1
Min	**Max**	**Factory setting**
- [Hz]	- [Hz]	- [Hz]

Description: Displays the smoothed converter frequency.

Dependency: Refer to: r0066

Note: Smoothing time constant = 100 ms
The signal is not suitable as a process quantity and may only be used as a display quantity.
The output frequency is available smoothed (r0024) and unsmoothed (r0066).

r0025 CO: Output voltage smoothed / U_outp smooth

SERVO_S110-DP, SERVO_S110-CAN, SERVO_S110-PN

Can be changed: -	**Calculated:** -	**Access level:** 2
Data type: FloatingPoint32	**Dyn. index:** -	**Func. diagram:** 1690, 5730, 6799
P-Group: Displays, signals	**Unit group:** -	**Unit selection:** -
Not for motor type: -	**Scaling:** p2001	**Expert list:** 1
Min	**Max**	**Factory setting**
- [Vrms]	- [Vrms]	- [Vrms]

Description: Displays the smoothed output voltage of the power unit.
Dependency: Refer to: r0072
Note: Smoothing time constant = 100 ms
The signal is not suitable as a process quantity and may only be used as a display quantity.
The output voltage is available smoothed (r0025) and unsmoothed (r0072).

r0026 CO: DC link voltage smoothed / Vdc smooth

SERVO_S110-DP, SERVO_S110-CAN, SERVO_S110-PN

Can be changed: -	**Calculated:** -	**Access level:** 2
Data type: FloatingPoint32	**Dyn. index:** -	**Func. diagram:** 5730, 8750, 8850, 8950
P-Group: Displays, signals	**Unit group:** -	**Unit selection:** -
Not for motor type: -	**Scaling:** p2001	**Expert list:** 1
Min	**Max**	**Factory setting**
- [V]	- [V]	- [V]

Description: Displays the smoothed actual value of the DC link voltage.
Dependency: Refer to: r0070
Notice: When measuring a DC link voltage < 200 V, for the Power Module (e.g. PM340) a valid measured value is not supplied. In this case, when an external 24 V power supply is connected, a value of approx. 24 V is displayed in the display parameter.
Note: Smoothing time constant = 100 ms
The signal is not suitable as a process quantity and may only be used as a display quantity.
The DC link voltage is available smoothed (r0026) and unsmoothed (r0070).

r0027 CO: Absolute actual current smoothed / I_act abs val smth

SERVO_S110-DP, SERVO_S110-CAN, SERVO_S110-PN

Can be changed: -	**Calculated:** -	**Access level:** 2
Data type: FloatingPoint32	**Dyn. index:** -	**Func. diagram:** 5730, 6799, 8850, 8950
P-Group: Displays, signals	**Unit group:** -	**Unit selection:** -
Not for motor type: -	**Scaling:** p2002	**Expert list:** 1
Min	**Max**	**Factory setting**
- [Arms]	- [Arms]	- [Arms]

Description: Displays the smoothed absolute actual current value.
Dependency: Refer to: r0068
Notice: This smoothed signal is not suitable for diagnostics or evaluation of dynamic operations. In this case, the unsmoothed value should be used.
Note: Smoothing time constant = 100 ms
The signal is not suitable as a process quantity and may only be used as a display quantity.
The absolute current actual value is available smoothed (r0027) and unsmoothed (r0068).

r0028 Modulation depth smoothed / Mod_depth smth

SERVO_S110-DP, SERVO_S110-CAN, SERVO_S110-PN

Can be changed: -	**Calculated:** -	**Access level:** 3
Data type: FloatingPoint32	**Dyn. index:** -	**Func. diagram:** 5730, 6799, 8950
P-Group: Displays, signals	**Unit group:** -	**Unit selection:** -
Not for motor type: -	**Scaling:** p2002	**Expert list:** 1
Min	**Max**	**Factory setting**
- [%]	- [%]	- [%]

Description: Displays the smoothed actual value of the modulation depth.

Dependency: Refer to: r0074

Note: Smoothing time constant = 100 ms

The signal is not suitable as a process quantity and may only be used as a display quantity.

The modulation depth is available smoothed (r0028) and unsmoothed (r0074).

r0029 Current actual value field-generating smoothed / Id_act smooth

SERVO_S110-DP, SERVO_S110-CAN, SERVO_S110-PN

Can be changed: -	**Calculated:** -	**Access level:** 3
Data type: FloatingPoint32	**Dyn. index:** -	**Func. diagram:** 5730
P-Group: Displays, signals	**Unit group:** -	**Unit selection:** -
Not for motor type: -	**Scaling:** p2002	**Expert list:** 1
Min	**Max**	**Factory setting**
- [Arms]	- [Arms]	- [Arms]

Description: Displays the smoothed field-generating actual current.

Dependency: Refer to: r0076

Note: Smoothing time constant = 100 ms

The signal is not suitable as a process quantity and may only be used as a display quantity.

The field-generating current actual value is available smoothed (r0029) and unsmoothed (r0076).

r0030 Current actual value torque-generating smoothed / Iq_act smooth

SERVO_S110-DP, SERVO_S110-CAN, SERVO_S110-PN

Can be changed: -	**Calculated:** -	**Access level:** 3
Data type: FloatingPoint32	**Dyn. index:** -	**Func. diagram:** 5730
P-Group: Displays, signals	**Unit group:** -	**Unit selection:** -
Not for motor type: -	**Scaling:** p2002	**Expert list:** 1
Min	**Max**	**Factory setting**
- [Arms]	- [Arms]	- [Arms]

Description: Displays the smoothed torque-generating actual current.

Dependency: Refer to: r0078

Note: Smoothing time constant = 100 ms

The signal is not suitable as a process quantity and may only be used as a display quantity.

The torque-generating current actual value is available smoothed (r0030 with 100 ms, r0078[1] with p0045) and unsmoothed (r0078[0]).

r0031 Actual torque smoothed / M_act smooth

SERVO_S110-DP, SERVO_S110-CAN, SERVO_S110-PN

Can be changed: -	**Calculated:** -	**Access level:** 2
Data type: FloatingPoint32	**Dyn. index:** -	**Func. diagram:** 5730, 6799
P-Group: Displays, signals	**Unit group:** 7_1	**Unit selection:** p0505
Not for motor type: -	**Scaling:** p2003	**Expert list:** 1
Min	**Max**	**Factory setting**
- [Nm]	- [Nm]	- [Nm]

Description: Displays the smoothed torque actual value.

Dependency: Refer to: r0080

Note: Smoothing time constant = 100 ms
The signal is not suitable as a process quantity and may only be used as a display quantity.
The active current actual value is available smoothed (r0031) and unsmoothed (r0080).

r0032 CO: Active power actual value smoothed / P_actv_act smth

SERVO_S110-DP, SERVO_S110-CAN, SERVO_S110-PN

Can be changed: -	**Calculated:** -	**Access level:** 2
Data type: FloatingPoint32	**Dyn. index:** -	**Func. diagram:** 5730
P-Group: Displays, signals	**Unit group:** 14_10	**Unit selection:** p0505
Not for motor type: -	**Scaling:** r2004	**Expert list:** 1
Min	**Max**	**Factory setting**
- [kW]	- [kW]	- [kW]

Description: Displays the smoothed actual value of the active power.
Dependency: Refer to: r0082
Notice: This smoothed signal is not suitable for diagnostics or evaluation of dynamic operations. In this case, the unsmoothed value should be used.
Note: Significance for the drive: Power output at the motor shaft
The active power is available smoothed (r0032 with 100 ms, r0082[1] with p0045) and unsmoothed (r0082[0]).

r0033 Torque utilization smoothed / M_util smooth

SERVO_S110-DP, SERVO_S110-CAN, SERVO_S110-PN

Can be changed: -	**Calculated:** -	**Access level:** 3
Data type: FloatingPoint32	**Dyn. index:** -	**Func. diagram:** 8012
P-Group: Displays, signals	**Unit group:** -	**Unit selection:** -
Not for motor type: -	**Scaling:** PERCENT	**Expert list:** 1
Min	**Max**	**Factory setting**
- [%]	- [%]	- [%]

Description: Displays the smoothed torque utilization as a percentage.
The torque utilization is obtained from the required smoothed torque in reference to the torque limit, scaled using p2196.
Note: Smoothing time constant = 100 ms
The signal is not suitable as a process quantity and may only be used as a display quantity.
The torque utilization is available smoothed (r0033) and unsmoothed (r0081).
For M_set total (r0079) > M_max offset (p1532), the following applies:
- demanded torque = M_set total - M_max offset
- actual torque limit = M_max upper effective (r1538) - M_max offset
For M_set total (r0079) <= M_max offset (p1532), the following applies:
- demanded torque = M_max offset - M_set total
- actual torque limit = M_max offset - M_max lower effective (r1539)
For the actual torque limit = 0, the following applies: r0033 = 100 %
For the actual torque limit < 0, the following applies: r0033 = 0 %

r0034 CO: Motor utilization / Motor utilization

SERVO_S110-DP, SERVO_S110-CAN, SERVO_S110-PN

Can be changed: -	**Calculated:** -	**Access level:** 2
Data type: FloatingPoint32	**Dyn. index:** -	**Func. diagram:** 8017
P-Group: Displays, signals	**Unit group:** -	**Unit selection:** -
Not for motor type: ASM, REL, FEM	**Scaling:** PERCENT	**Expert list:** 1
Min	**Max**	**Factory setting**
- [%]	- [%]	- [%]

Description: Displays the motor utilization from the thermal I2t motor model.
Dependency: The motor utilization is only determined for permanent-magnet synchronous motors and if the I2t motor model is activated.
The motor utilization is formed from the ratio between the I2t motor model temperature (minus 40 Kelvin) and the reference value p0605 (motor overtemperature, fault threshold) - 40 Kelvin. If p0605 is reduced, r0034 increases and the motor temperature remains the same.
Refer to: p0611, p0612, p0615

Note: Smoothing time constant = 100 ms
The signal is not suitable as a process quantity and may only be used as a display quantity.
A value of r0034 = -200.0 % indicates an invalid display, for example, because the thermal I2t motor model was not activated or was incorrectly parameterized.

r0035 CO: Motor temperature / Mot temp

SERVO_S110-DP, SERVO_S110-CAN, SERVO_S110-PN

Can be changed: -	**Calculated:** -	**Access level:** 2
Data type: FloatingPoint32	**Dyn. index:** -	**Func. diagram:** 7008, 8016, 8017
P-Group: Displays, signals	**Unit group:** 21_1	**Unit selection:** p0505
Not for motor type: -	**Scaling:** p2006	**Expert list:** 1
Min	**Max**	**Factory setting**
- [°C]	- [°C]	- [°C]

Description: Displays the actual temperature in the motor.

Note: For r0035 not equal to -200.0 °C, the following applies:
- this temperature display is valid.
- a KTY sensor is connected.
- the thermal model for the induction motor is activated (p0612 bit 1 = 1 and temperature sensor de-activated: p0600 = 0 or p0601 = 0).

For r0035 equal to -200.0 °C, the following applies:
- this temperature display is not valid (temperature sensor error).
- A PTC sensor or bimetallic NC contact is connected.
- the temperature sensor of the synchronous motor is de-activated (p0600 = 0 or p0601 = 0).

r0036 CO: Power unit overload I2t / PU overload I2t

SERVO_S110-DP, SERVO_S110-CAN, SERVO_S110-PN

Can be changed: -	**Calculated:** -	**Access level:** 3
Data type: FloatingPoint32	**Dyn. index:** -	**Func. diagram:** 8014
P-Group: Displays, signals	**Unit group:** -	**Unit selection:** -
Not for motor type: -	**Scaling:** PERCENT	**Expert list:** 1
Min	**Max**	**Factory setting**
- [%]	- [%]	- [%]

Description: Displays the power unit overload determined using the I2t calculation.
A current reference value is defined for the I2t monitoring of the power unit. It represents the current that can be conducted by the power unit without any influence of the switching losses (e.g. the continuously permissible current of the capacitors, inductances, busbars, etc.).
If the I2t reference current of the power unit is not exceeded, then an overload (0 %) is not displayed.
In the other case, the degree of thermal overload is calculated, whereby 100% results in a trip.

Dependency: Refer to: p0290, p0294
Refer to: F30005

r0037[0...1] Control Unit temperature / CU temperature

CU_S110-DP, CU_S110-CAN, CU_S110-PN

Can be changed: -	**Calculated:** -	**Access level:** 3
Data type: FloatingPoint32	**Dyn. index:** -	**Func. diagram:** -
P-Group: Displays, signals	**Unit group:** -	**Unit selection:** -
Not for motor type: -	**Scaling:** p2006	**Expert list:** 1
Min	**Max**	**Factory setting**
- [°C]	- [°C]	- [°C]

Description: Displays the Control Unit temperature.
An appropriate message is output when 87 °C is exceeded.

Index: [0] = Temperature actual
[1] = Temperature maximum

Dependency: Refer to: A01009

Note: The value of -200 indicates that there is no measuring signal.

r0037[0...19] CO: Power unit temperatures / PU temperatures

SERVO_S110-DP, SERVO_S110-CAN, SERVO_S110-PN

Can be changed: -	**Calculated:** -	**Access level:** 3
Data type: FloatingPoint32	**Dyn. index:** -	**Func. diagram:** 8014
P-Group: Displays, signals	**Unit group:** 21_1	**Unit selection:** p0505
Not for motor type: -	**Scaling:** p2006	**Expert list:** 1
Min	**Max**	**Factory setting**
- [°C]	- [°C]	- [°C]

Description: Displays the temperatures in the power unit.

Index:
[0] = Inverter maximum value
[1] = Depletion layer maximum value
[2] = Rectifier maximum value
[3] = Air intake
[4] = Interior of power unit
[5] = Inverter 1
[6] = Inverter 2
[7] = Inverter 3
[8] = Inverter 4
[9] = Inverter 5
[10] = Inverter 6
[11] = Rectifier 1
[12] = Rectifier 2
[13] = Depletion layer 1
[14] = Depletion layer 2
[15] = Depletion layer 3
[16] = Depletion layer 4
[17] = Depletion layer 5
[18] = Depletion layer 6
[19] = Cooling unit liquid intake

Note:
The value of -200 indicates that there is no measuring signal.
r0037[0]: Maximum value of the inverter temperatures (r0037[5...10]).
r0037[1]: Maximum value of the depletion layer temperatures (r0037[13...18]).
r0037[2]: Maximum value of the rectifier temperatures (r0037[11...12]).
The maximum value is the temperature of the hottest inverter, depletion layer, or rectifier.

p0045 Smoothing time constant, display values / T_smth display

SERVO_S110-DP, SERVO_S110-CAN, SERVO_S110-PN

Can be changed: U, T	**Calculated:** -	**Access level:** 2
Data type: FloatingPoint32	**Dyn. index:** -	**Func. diagram:** 4715, 5610, 5730, 6714, 8012
P-Group: -	**Unit group:** -	**Unit selection:** -
Not for motor type: -	**Scaling:** -	**Expert list:** 1
Min	**Max**	**Factory setting**
0.00 [ms]	1000.00 [ms]	1.00 [ms]

Description: Sets the smoothing time constant for the following display values:
r0078[1], r0079[1], r0081 (calculated from the quantities smoothed with p0045), r0082[1]

r0046.0...31 CO/BO: Missing enable sig / Missing enable sig

SERVO_S110-DP, SERVO_S110-CAN, SERVO_S110-PN

Can be changed: -	**Calculated:** -	**Access level:** 1
Data type: Unsigned32	**Dyn. index:** -	**Func. diagram:** 2634
P-Group: Displays, signals	**Unit group:** -	**Unit selection:** -
Not for motor type: -	**Scaling:** -	**Expert list:** 1
Min	**Max**	**Factory setting**
-	-	-

Description: Displays missing enable signals that are preventing the closed-loop drive control from being commissioned.

Bit field:

Bit	Signal name	1 signal	0 signal	FP
00	OFF1 enable missing	Yes	No	-
01	OFF2 enable missing	Yes	No	-

02	OFF3 enable missing	Yes	No	-
03	Operation enable missing	Yes	No	-
04	Armature short-circuit / DC braking enable missing	Yes	No	7014, 7016
05	STOP2 enable missing	Yes	No	-
06	STOP1 enable missing	Yes	No	-
08	EP terminals enable missing	Yes	No	-
09	Infeed enable missing	Yes	No	-
10	Ramp-function generator enable missing	Yes	No	-
11	Ramp-function generator start missing	Yes	No	-
12	Setpoint enable missing	Yes	No	-
16	OFF1 enable internal missing	Yes	No	-
17	OFF2 enable internal missing	Yes	No	-
18	OFF3 enable internal missing	Yes	No	-
19	Pulse enable internal missing	Yes	No	-
20	Armature short-circuit/DC braking internal enable missing	Yes	No	7014, 7016
21	STOP2 enable internal missing	Yes	No	-
22	STOP1 enable internal missing	Yes	No	-
25	Function bypass active	Yes	No	-
26	Drive inactive or not operational	Yes	No	-
27	De-magnetizing not completed	Yes	No	-
28	Brake open missing	Yes	No	-
29	Cooling unit ready signal missing	Yes	No	-
30	Speed controller inhibited	Yes	No	-
31	Jog setpoint active	Yes	No	-

Dependency: Refer to: r0002

Note: The value r0046 = 0 indicates that all enable signals for this drive are present.

Bit 00 = 1 (enable signal missing), if:

- the signal source in p0840 is a 0 signal.
- there is a "switching on inhibited".

Bit 01 = 1 (enable signal missing), if:

- the signal source in p0844 or p0845 is a 0 signal.

Bit 02 = 1 (enable signal missing), if:

- the signal source in p0848 or p0849 is a 0 signal.

Bit 03 = 1 (enable signal missing), if:

- the signal source in p0852 is a 0 signal.

Bit 04 =1 (armature short-circuit active), if:

- the signal source in p1230 has a 1 signal

Bit 05, Bit 06: Being prepared

Bit 08 = 1 (enable signal missing), if:

- the pulse enable via terminal EP is missing (booksize: X21, chassis: X41).

Bit 09 = 1 (enable signal missing), if:

- the signal source in p0864 is a 0 signal.

Bit 10 = 1 (enable signal missing), if:

- the signal source in p1140 is a 0 signal.

Bit 11 = 1 (enable signal missing) if the speed setpoint is frozen, because:

- the signal source in p1141 is a 0 signal.
- the speed setpoint is entered from jogging and the two signal sources for jogging, bit 0 (p1055) and bit 1 (p1056) have a 1 signal.

Bit 12 = 1 (enable signal missing), if:

- the signal source in p1142 is a 0 signal.
- When activating the function module "basic positioner" (r0108.4 = 1), the signal source in p1142 is set to a 0 signal.

Bit 16 = 1 (enable signal missing), if:

- there is an OFF1 fault response. The system is only enabled if the fault is removed and was acknowledged and the "switching on inhibited" withdrawn with OFF1 = 0.

Bit 17 = 1 (enable signal missing), if:
- commissioning mode is selected (p0009 > 0 or p0010 > 0).
- there is an OFF2 fault response.
- the drive is inactive (p0105 = 0) or is not operational (r7850[DO-Index]=0).

Bit 18 = 1 (enable signal missing), if:
- OFF3 has still not been completed or an OFF3 fault response is present.

Bit 19 = 1 (internal pulse enable missing), if:
- synchronization is running between the basic clock cycle, DRIVE-CLiQ clock cycle and application clock cycle.

Bit 20 =1 (internal armature short-circuit active), if:
- the drive is not in the state "S4: Operation" or "S5x" (refer to function diagram 2610).
- the internal pulse enable is missing (r0046.19 = 0).

Bit 21 = 1 (enable signal missing), if:
The pulses have been enabled and the speed setpoint has still not been enabled, because:
- the holding brake opening time (p1216) has still not expired.
- the motor has still not been magnetized (induction motor).
- the encoder has not been calibrated (U/f vector and synchronous motor)

Bit 22: Being prepared

Bit 26 = 1 (enable signal missing), if:
- the drive is inactive (p0105 = 0) or is not operational (r7850[DO-Index]=0).

Bit 27 = 1 (enable signal missing), if:
- de-magnetizing has still not been completed (only for vector).

Bit 28 = 1 (enable signal missing), if:
- the holding brake is closed or has still not been opened.

Bit 29 = 1 (enable signal missing), if:
- the cooling unit ready signal via BI: p0266[1] missing.

Bit 30 = 1 (speed controller inhibited), if one of the following reasons is present:
- A 0 signal is available via BI: p0856.
- the function generator with current input is active.
- the measuring function "current controller reference frequency characteristic" is active.
- the pole position identification is active.
- motor data identification is active (only certain steps).

Bit 31 = 1 (enable signal missing), if:
- the speed setpoint from jog 1 or 2 is entered.

r0047 Status, identification / Status ident

SERVO_S110-DP, SERVO_S110-CAN, SERVO_S110-PN

Can be changed: -	**Calculated:** -	**Access level:** 1
Data type: Integer16	**Dyn. index:** -	**Func. diagram:** -
P-Group: Displays, signals	**Unit group:** -	**Unit selection:** -
Not for motor type: -	**Scaling:** -	**Expert list:** 1
Min	**Max**	**Factory setting**
0	104	-

Description: Displays the currently executed steps or the first step after the enable for the motor identification and pole position identification routines.

Value:
0: No measurement
1: PolID: Wait for brake closing time
2: PolID: Measurement step 1
3: PolID: Measurement step 2
4: PolID: Measurement step 3
5: PolID: Measurement step 4
6: PolID: Measurement stage 2
7: PolID: Measurement evaluation
8: PolID: Measurement end
11: MotID: Inductance measurement, step 1
12: MotID: Inductance measurement, step 2
13: MotID: Inductance measurement evaluation
14: MotID: Resistance measurement evaluation
15: MotID: Fine synchronization step 1

16: MotID: Fine synchronization step 2
17: MotID: Fine synchronization step 3
18: MotID: Fine synchronization end
20: MotID: Rotating inductance measurement step 1
21: MotID: Rotating inductance measurement step 2
22: MotID: Rotating inductance measurement step 3
23: MotID: Rotating inductance measurement step 4
24: MotID: Rotating Inductance measurement evaluation
25: MotID: Rotating Inductance measurement end
30: MotID: Induction motor measurement step 1
31: MotID: Induction motor measurement step 2
32: MotID: Induction motor measurement step 3
33: MotID: Induction motor measurement step 4
34: MotID: Induction motor measurement step 5
35: MotID: Induction motor measurement step 6
36: MotID: Induction motor measurement step 7
37: MotID: Induction motor measurement step 8
38: MotID: Induction motor measurement step 9
40: MotID: Commutating angle step 1
41: MotID: Commutating angle step 2
42: MotID: Commutating angle step 3
43: MotID: Commutating angle step 4
45: MotID: Commutating angle rotating step 1
46: MotID: Commutating angle rotating step 2
47: MotID: Commutating angle rotating step 3
48: MotID: Commutating angle rotating complete
50: MotID: kT determination step 1
51: MotID: kT determination step 2
52: MotID: kT determination step 3
53: MotID: kT determination evaluation
54: MotID: kT determination end
60: MotID: Reluctance constant measurement step 1
61: MotID: Reluctance constant measurement step 2
62: MotID: Reluctance constant measurement step 3
63: MotID: Reluctance constant measurement end
70: MotID: Moment of inertia measurement step 1
71: MotID: Moment of inertia measurement step 2
72: MotID: Moment of inertia measurement step 3
73: MotID: Moment of inertia measurement end
80: MotID: Magnetizing inductance measurement step 1
81: MotID: Magnetizing inductance measurement step 2
82: MotID: Magnetizing inductance measurement step 3
83: MotID: Magnetizing inductance measurement evaluation
84: MotID: Magnetizing inductance measurement end
90: MotID: Saturation characteristic. step 1
91: MotID: Saturation characteristic. step 2
92: MotID: Saturation characteristic. step 3
93: MotID: Saturation characteristic evaluation 1
94: MotID: Saturation characteristic evaluation 2
95: MotID: Saturation characteristic end
96: MotID: Converter model step 1
97: MotID: Converter model step 2
98: MotID: Converter model step 3
99: MotID: Converter model step 4
100: PolID: Motion-based step 1
101: PolID: Motion-based step 2
102: PolID: Motion-based step 3
103: PolID: Motion-based step 4
104: PolID: Motion-based step 5

r0049[0...3] Motor data set/encoder data set effective / MDS/EDS effective

SERVO_S110-DP, SERVO_S110-CAN, SERVO_S110-PN

Can be changed: -	**Calculated:** -	**Access level:** 2
Data type: Unsigned8	**Dyn. index:** -	**Func. diagram:** 8565
P-Group: Displays, signals	**Unit group:** -	**Unit selection:** -
Not for motor type: -	**Scaling:** -	**Expert list:** 1
Min	**Max**	**Factory setting**
-	-	-

Description: Displays the effective Motor Data Set (MDS) and the effective Encoder Data Sets (EDS).

Index:
[0] = Motor Data Set MDS effective
[1] = Encoder 1 Encoder Data Set EDS effective
[2] = Encoder 2 Encoder Data Set EDS effective
[3] = Reserved

Dependency: Refer to: p0186, p0187, p0188, r0838

Note: Value 99 means the following: No encoder assigned (not configured).

r0050.0...1 CO/BO: Command Data Set CDS effective / CDS effective

SERVO_S110-DP, SERVO_S110-CAN, SERVO_S110-PN

Can be changed: -	**Calculated:** -	**Access level:** 2
Data type: Unsigned8	**Dyn. index:** -	**Func. diagram:** 8560
P-Group: Displays, signals	**Unit group:** -	**Unit selection:** -
Not for motor type: -	**Scaling:** -	**Expert list:** 1
Min	**Max**	**Factory setting**
-	-	-

Description: Displays the effective Command Data Set (CDS).

Bit field:

Bit	Signal name	1 signal	0 signal	FP
00	CDS eff bit 0	ON	OFF	-
01	CDS eff bit 1	ON	OFF	-

Dependency: Refer to: p0810, r0836

Note: The Command Data Set selected using a binector input (e.g. p0810) is displayed using r0836.

r0051.0...1 CO/BO: Drive Data Set DDS effective / DDS effective

SERVO_S110-DP, SERVO_S110-CAN, SERVO_S110-PN

Can be changed: -	**Calculated:** -	**Access level:** 2
Data type: Unsigned8	**Dyn. index:** -	**Func. diagram:** -
P-Group: Displays, signals	**Unit group:** -	**Unit selection:** -
Not for motor type: -	**Scaling:** -	**Expert list:** 1
Min	**Max**	**Factory setting**
-	-	-

Description: Displays the effective Drive Data Set (DDS).

Bit field:

Bit	Signal name	1 signal	0 signal	FP
00	DDS eff bit 0	ON	OFF	-
01	DDS eff bit 1	ON	OFF	-

Dependency: Refer to: p0820, r0837

Note: The drive data set changeover is suppressed when selecting the motor identification, during the rotating measurement, the encoder calibration and the friction characteristic record.

r0056.1...15 CO/BO: Status word, closed-loop control / ZSW cl-loop ctrl

SERVO_S110-DP, SERVO_S110-CAN, SERVO_S110-PN

Can be changed: -	**Calculated:** -	**Access level:** 3
Data type: Unsigned16	**Dyn. index:** -	**Func. diagram:** 1530, 2526
P-Group: Displays, signals	**Unit group:** -	**Unit selection:** -
Not for motor type: -	**Scaling:** -	**Expert list:** 1
Min	**Max**	**Factory setting**
-	-	-

Description: Displays the status word of the closed-loop control.

Bit field:	Bit	Signal name	1 signal	0 signal	FP
	01	De-magnetizing completed	Yes	No	-
	04	Magnetizing completed	Yes	No	2701
	08	Field weakening active	Yes	No	-
	14	Vdc_max controller active	Yes	No	-
	15	Vdc_min controller active	Yes	No	-

Note: Re bit 04:
The bit is immediately set after power-on
Exception:
For an induction motor with brake (except for p1215 = 2), the bit is only set when 60% of the reference flux is reached.

r0060 CO: Speed setpoint before the setpoint filter / n_set before filt.

SERVO_S110-DP, SERVO_S110-CAN, SERVO_S110-PN

Can be changed: -	**Calculated:** -	**Access level:** 3
Data type: FloatingPoint32	**Dyn. index:** -	**Func. diagram:** 2701, 2704, 5020, 6030, 6799
P-Group: Displays, signals	**Unit group:** 3_1	**Unit selection:** p0505
Not for motor type: -	**Scaling:** p2000	**Expert list:** 1
Min	**Max**	**Factory setting**
- [rpm]	- [rpm]	- [rpm]

Description: Displays the actual speed setpoint at the input of the speed controller or U/f characteristic (after the interpolator).
Dependency: Refer to: r0020
Note: The speed setpoint is available smoothed (r0020) and unsmoothed (r0060).

r0061[0...1] CO: Actual speed unsmoothed / n_act unsmoothed

SERVO_S110-DP, SERVO_S110-CAN, SERVO_S110-PN

Can be changed: -	**Calculated:** -	**Access level:** 2
Data type: FloatingPoint32	**Dyn. index:** -	**Func. diagram:** 1580, 4710, 4715
P-Group: Displays, signals	**Unit group:** 3_1	**Unit selection:** p0505
Not for motor type: -	**Scaling:** p2000	**Expert list:** 1
Min	**Max**	**Factory setting**
- [rpm]	- [rpm]	- [rpm]

Description: Displays the unsmoothed actual speed values sensed by the encoders.
Index: [0] = Encoder 1
[1] = Encoder 2

r0062 CO: Speed setpoint after the filter / n_set after filter

SERVO_S110-DP, SERVO_S110-CAN, SERVO_S110-PN

Can be changed: -	**Calculated:** -	**Access level:** 3
Data type: FloatingPoint32	**Dyn. index:** -	**Func. diagram:** 1590, 1750, 5020, 5030, 5210, 6030
P-Group: Displays, signals	**Unit group:** 3_1	**Unit selection:** p0505
Not for motor type: -	**Scaling:** p2000	**Expert list:** 1
Min	**Max**	**Factory setting**
- [rpm]	- [rpm]	- [rpm]

Description: Displays the actual speed setpoint after the setpoint filters.

r0063 CO: Actual speed smoothed / n_act smooth

SERVO_S110-DP, SERVO_S110-CAN, SERVO_S110-PN

Can be changed: -	**Calculated:** -	**Access level:** 3
Data type: FloatingPoint32	**Dyn. index:** -	**Func. diagram:** 1580, 1590, 4710, 5300
P-Group: Displays, signals	**Unit group:** 3_1	**Unit selection:** p0505
Not for motor type: -	**Scaling:** p2000	**Expert list:** 1
Min	**Max**	**Factory setting**
- [rpm]	- [rpm]	- [rpm]

Description: Displays the current smoothed actual speed for speed control.

Dependency: Refer to: r0021, r0022, r0061, p1441
Note: The speed actual value is calculated in encoderless operation.
For operation with encoder, r0063 is smoothed with p1441.
The speed actual value is available smoothed (r0021, r0022) and unsmoothed (r0063).

r0064 CO: Speed controller system deviation / n_ctrl system dev

SERVO_S110-DP, SERVO_S110-CAN, SERVO_S110-PN

Can be changed: -	**Calculated:** -	**Access level:** 3
Data type: FloatingPoint32	**Dyn. index:** -	**Func. diagram:** 5040, 6040
P-Group: Displays, signals	**Unit group:** 3_1	**Unit selection:** p0505
Not for motor type: -	**Scaling:** p2000	**Expert list:** 1
Min	**Max**	**Factory setting**
- [rpm]	- [rpm]	- [rpm]

Description: Displays the actual system deviation of the speed controller.
Note: In servo control mode with active reference model, the system deviation to the P component of the speed controller is displayed.

r0065 Slip frequency / f_Slip

SERVO_S110-DP, SERVO_S110-CAN, SERVO_S110-PN

Can be changed: -	**Calculated:** -	**Access level:** 3
Data type: FloatingPoint32	**Dyn. index:** -	**Func. diagram:** 1710, 6310, 6727, 6730, 6732
P-Group: Displays, signals	**Unit group:** 2_1	**Unit selection:** p0505
Not for motor type: -	**Scaling:** p2000	**Expert list:** 1
Min	**Max**	**Factory setting**
- [Hz]	- [Hz]	- [Hz]

Description: Displays the slip frequency for induction motors (ASM).

r0066 CO: Output frequency / f_outp

SERVO_S110-DP, SERVO_S110-CAN, SERVO_S110-PN

Can be changed: -	**Calculated:** -	**Access level:** 3
Data type: FloatingPoint32	**Dyn. index:** -	**Func. diagram:** 1690, 5300, 5730, 6310, 6730, 6731, 6799
P-Group: Displays, signals	**Unit group:** 2_1	**Unit selection:** p0505
Not for motor type: -	**Scaling:** p2000	**Expert list:** 1
Min	**Max**	**Factory setting**
- [Hz]	- [Hz]	- [Hz]

Description: Displays the Motor Module output frequency.
Dependency: Refer to: r0024
Note: The output frequency is available smoothed (r0024) and unsmoothed (r0066).

r0067 CO: Output current maximum / I_outp max

SERVO_S110-DP, SERVO_S110-CAN, SERVO_S110-PN

Can be changed: -	**Calculated:** -	**Access level:** 3
Data type: FloatingPoint32	**Dyn. index:** -	**Func. diagram:** 5722, 6300, 6640, 6724
P-Group: Displays, signals	**Unit group:** 6_2	**Unit selection:** p0505
Not for motor type: -	**Scaling:** p2002	**Expert list:** 1
Min	**Max**	**Factory setting**
- [Arms]	- [Arms]	- [Arms]

Description: Displays the maximum output current of the Motor Module.
Dependency: The maximum output current is determined by the parameterized current limit and the motor and converter thermal protection.
Refer to: p0290, p0640

r0068 CO: Absolute current actual value / I_act abs val

SERVO_S110-DP, SERVO_S110-CAN, SERVO_S110-PN

Can be changed: -	**Calculated:** -	**Access level:** 3
Data type: FloatingPoint32	**Dyn. index:** -	**Func. diagram:** 5730, 7017, 8014, 8017, 8850, 8950
P-Group: Displays, signals	**Unit group:** 6_2	**Unit selection:** p0505
Not for motor type: -	**Scaling:** p2002	**Expert list:** 1
Min	**Max**	**Factory setting**
- [Arms]	- [Arms]	- [Arms]

Description: Displays actual absolute current.

Dependency: Refer to: r0027

Notice: For A_INF, S_INF the following applies:
The value is updated with the current controller sampling time.
The following applies for SERVO:
The value is updated with a sampling time of 1 ms.

Note: Absolute current value = sqrt(Iq^2 + Id^2)
The absolute current actual value is available smoothed (r0027) and unsmoothed (r0068).

r0069[0...6] Phase current actual value / I_phase act value

SERVO_S110-DP, SERVO_S110-CAN, SERVO_S110-PN

Can be changed: -	**Calculated:** -	**Access level:** 3
Data type: FloatingPoint32	**Dyn. index:** -	**Func. diagram:** 1630, 5730, 6714, 6730, 6731, 8850, 8950
P-Group: Displays, signals	**Unit group:** 6_5	**Unit selection:** p0505
Not for motor type: -	**Scaling:** p2002	**Expert list:** 1
Min	**Max**	**Factory setting**
- [A]	- [A]	- [A]

Description: Displays the measured actual phase currents as peak value.

Index: [0] = Phase U
[1] = Phase V
[2] = Phase W
[3] = Phase U offset
[4] = Phase V offset
[5] = Phase W offset
[6] = Total U, V, W

Note: In indices 3 ... 5, the offset currents of the 3 phases, which are added to correct the phase currents, are displayed.
The sum of the 3 corrected phase currents is displayed in index 6.

r0070 CO: Actual DC link voltage / Vdc act val

SERVO_S110-DP, SERVO_S110-CAN, SERVO_S110-PN

Can be changed: -	**Calculated:** -	**Access level:** 3
Data type: FloatingPoint32	**Dyn. index:** -	**Func. diagram:** 5730
P-Group: Displays, signals	**Unit group:** 5_2	**Unit selection:** p0505
Not for motor type: -	**Scaling:** p2001	**Expert list:** 1
Min	**Max**	**Factory setting**
- [V]	- [V]	- [V]

Description: Displays the measured actual value of the DC link voltage.

Dependency: Refer to: r0026

Notice: For SINAMICS S120 AC Drive (AC/AC) the following applies:
When measuring a DC link voltage < 200 V, for the Power Module (e.g. PM340) a valid measured value is not supplied. In this case, when an external 24V power supply is connected, a value of approx. 24 V is displayed.

Note: The DC link voltage is available smoothed (r0026) and unsmoothed (r0070).

r0072 CO: Output voltage / U_output

SERVO_S110-DP, SERVO_S110-CAN, SERVO_S110-PN

Can be changed: -	**Calculated:** -	**Access level:** 3
Data type: FloatingPoint32	**Dyn. index:** -	**Func. diagram:** 1630, 5730, 6730, 6731, 6799
P-Group: Displays, signals	**Unit group:** 5_1	**Unit selection:** p0505
Not for motor type: -	**Scaling:** p2001	**Expert list:** 1
Min	**Max**	**Factory setting**
- [Vrms]	- [Vrms]	- [Vrms]

Description: Displays the actual power unit output voltage (Motor Module).
Dependency: Refer to: r0025
Note: The output voltage is available smoothed (r0025) and unsmoothed (r0072).

r0074 CO: Modulat_depth / Modulat_depth

SERVO_S110-DP, SERVO_S110-CAN, SERVO_S110-PN

Can be changed: -	**Calculated:** -	**Access level:** 3
Data type: FloatingPoint32	**Dyn. index:** -	**Func. diagram:** 5730, 6730, 6731, 6799, 8940, 8950
P-Group: Displays, signals	**Unit group:** -	**Unit selection:** -
Not for motor type: -	**Scaling:** PERCENT	**Expert list:** 1
Min	**Max**	**Factory setting**
- [%]	- [%]	- [%]

Description: Displays the actual modulation depth.
Dependency: Refer to: r0028
Note: For space vector modulation, 100% corresponds to the maximum output voltage without overcontrol.
Values above 100 % indicate an overcontrol condition - values below 100% have no overcontrol.
The phase voltage (phase-to-phase, rms) is calculated as follows:(r0074 x r0070) / (sqrt(2) x 100 %).
The modulation depth is available smoothed (r0028) and unsmoothed (r0074).

r0075 CO: Current setpoint field-generating / Id_set

SERVO_S110-DP, SERVO_S110-CAN, SERVO_S110-PN

Can be changed: -	**Calculated:** -	**Access level:** 3
Data type: FloatingPoint32	**Dyn. index:** -	**Func. diagram:** 1630, 5714, 5722, 6714
P-Group: Displays, signals	**Unit group:** 6_2	**Unit selection:** p0505
Not for motor type: -	**Scaling:** p2002	**Expert list:** 1
Min	**Max**	**Factory setting**
- [Arms]	- [Arms]	- [Arms]

Description: Displays the field-generating current setpoint (Id_set).
Note: This value is irrelevant for the U/f control mode.

r0076 CO: Current actual value field-generating / Id_act

SERVO_S110-DP, SERVO_S110-CAN, SERVO_S110-PN

Can be changed: -	**Calculated:** -	**Access level:** 3
Data type: FloatingPoint32	**Dyn. index:** -	**Func. diagram:** 1630, 1710, 5714, 5730, 6714, 6799
P-Group: Displays, signals	**Unit group:** 6_2	**Unit selection:** p0505
Not for motor type: -	**Scaling:** p2002	**Expert list:** 1
Min	**Max**	**Factory setting**
- [Arms]	- [Arms]	- [Arms]

Description: Displays the field-generating current actual value (Id_act).
Dependency: Refer to: r0029
Note: This value is irrelevant for the U/f control mode.
The field-generating current actual value is available smoothed (r0029) and unsmoothed (r0076).

r0077 CO: Current setpoint torque-generating / Iq_set

SERVO_S110-DP, SERVO_S110-CAN, SERVO_S110-PN

Can be changed: -	**Calculated:** -	**Access level:** 3
Data type: FloatingPoint32	**Dyn. index:** -	**Func. diagram:** 1630, 1774, 5714, 6710, 6714, 6719
P-Group: Displays, signals	**Unit group:** 6_2	**Unit selection:** p0505
Not for motor type: -	**Scaling:** p2002	**Expert list:** 1
Min	**Max**	**Factory setting**
- [Arms]	- [Arms]	- [Arms]

Description: Displays the torque/force generating current setpoint.

Note: This value is irrelevant for the U/f control mode.

r0078[0...1] CO: Current actual value torque-generating / Iq_act

SERVO_S110-DP, SERVO_S110-CAN, SERVO_S110-PN

Can be changed: -	**Calculated:** -	**Access level:** 3
Data type: FloatingPoint32	**Dyn. index:** -	**Func. diagram:** 1630, 5714, 5730
P-Group: Displays, signals	**Unit group:** 6_2	**Unit selection:** p0505
Not for motor type: -	**Scaling:** p2002	**Expert list:** 1
Min	**Max**	**Factory setting**
- [Arms]	- [Arms]	- [Arms]

Description: Displays the torque-generating current actual value (Iq_act).

Index: [0] = Unsmoothed
[1] = Smoothed with p0045

Dependency: Refer to: r0030, p0045

Note: These values are irrelevant for the U/f control mode.

The torque-generating current actual value is available smoothed (r0030 with 100 ms, r0078[1] with p0045) and unsmoothed (r0078[0]).

r0079[0...1] CO: Torque setpoint total / M_set total

SERVO_S110-DP, SERVO_S110-CAN, SERVO_S110-PN

Can be changed: -	**Calculated:** -	**Access level:** 3
Data type: FloatingPoint32	**Dyn. index:** -	**Func. diagram:** 5610, 8012
P-Group: Displays, signals	**Unit group:** 7_1	**Unit selection:** p0505
Not for motor type: -	**Scaling:** p2003	**Expert list:** 1
Min	**Max**	**Factory setting**
- [Nm]	- [Nm]	- [Nm]

Description: Displays the torque setpoint at the output of the speed controller (before clock cycle interpolation).

Index: [0] = Unsmoothed
[1] = Smoothed with p0045

r0080 CO: Torque actual value / M_act

SERVO_S110-DP, SERVO_S110-CAN, SERVO_S110-PN

Can be changed: -	**Calculated:** -	**Access level:** 3
Data type: FloatingPoint32	**Dyn. index:** -	**Func. diagram:** 5730
P-Group: Displays, signals	**Unit group:** 7_1	**Unit selection:** p0505
Not for motor type: -	**Scaling:** p2003	**Expert list:** 1
Min	**Max**	**Factory setting**
- [Nm]	- [Nm]	- [Nm]

Description: Displays the actual torque value.

Dependency: Refer to: r0031

Note: The torque actual value is available smoothed (r0031) and unsmoothed (r0080).

r0081 CO: Torque utilization / M_Utilization

SERVO_S110-DP, SERVO_S110-CAN, SERVO_S110-PN

Can be changed: -	**Calculated:** -	**Access level:** 3
Data type: FloatingPoint32	**Dyn. index:** -	**Func. diagram:** 8012
P-Group: Displays, signals	**Unit group:** -	**Unit selection:** -
Not for motor type: -	**Scaling:** PERCENT	**Expert list:** 1
Min	**Max**	**Factory setting**
- [%]	- [%]	- [%]

Description: Displays the torque utilization as a percentage.
The torque utilization is obtained from the required smoothed torque referred to the torque limit.

Dependency: Refer to: r0033

Note: The torque utilization is available smoothed (r0033) and unsmoothed (r0081).
The torque utilization is obtained from the required torque referred to the torque limit as follows:
- Positive torque: r0081 = ((r0079 + p1532) / (r1538 - p1532)) * 100 %
- Negative torque: r0081 = ((-r0079 + p1532) / (-r1539 + p1532)) * 100 %
The calculation of the torque utilization depends on the selected smoothing time constant (p0045).

r0082[0...2] CO: Active power actual value / P_act

SERVO_S110-DP, SERVO_S110-CAN, SERVO_S110-PN

Can be changed: -	**Calculated:** -	**Access level:** 3
Data type: FloatingPoint32	**Dyn. index:** -	**Func. diagram:** 5730
P-Group: Displays, signals	**Unit group:** 14_5	**Unit selection:** p0505
Not for motor type: -	**Scaling:** r2004	**Expert list:** 1
Min	**Max**	**Factory setting**
- [kW]	- [kW]	- [kW]

Description: Displays the instantaneous active power.

Index: [0] = Unsmoothed
[1] = Smoothed with p0045
[2] = Electric power

Dependency: Refer to: r0032

Note: The mechanical active power is available smoothed (r0032 with 100 ms, r0082[1] with p0045) and unsmoothed (r0082[0]).

r0083 CO: Flux setpoint / Flex setp

SERVO_S110-DP, SERVO_S110-CAN, SERVO_S110-PN

Can be changed: -	**Calculated:** -	**Access level:** 3
Data type: FloatingPoint32	**Dyn. index:** -	**Func. diagram:** 5722
P-Group: Displays, signals	**Unit group:** -	**Unit selection:** -
Not for motor type: -	**Scaling:** PERCENT	**Expert list:** 1
Min	**Max**	**Factory setting**
- [%]	- [%]	- [%]

Description: Displays the flux setpoint.

r0084 CO: Flux actual value / Flux act val

SERVO_S110-DP, SERVO_S110-CAN, SERVO_S110-PN

Can be changed: -	**Calculated:** -	**Access level:** 3
Data type: FloatingPoint32	**Dyn. index:** -	**Func. diagram:** 5722
P-Group: Displays, signals	**Unit group:** -	**Unit selection:** -
Not for motor type: -	**Scaling:** PERCENT	**Expert list:** 1
Min	**Max**	**Factory setting**
- [%]	- [%]	- [%]

Description: Displays the flux actual value.

r0088 CO: DC link voltage setpoint / Vdc setpoint

SERVO_S110-DP (Tech_ctrl), SERVO_S110-CAN (Tech_ctrl), SERVO_S110-PN (Tech_ctrl)

Can be changed: -	**Calculated:** -	**Access level:** 3
Data type: FloatingPoint32	**Dyn. index:** -	**Func. diagram:** 8940, 8964
P-Group: Displays, signals	**Unit group:** 5_2	**Unit selection:** p0505
Not for motor type: -	**Scaling:** p2001	**Expert list:** 1
Min	**Max**	**Factory setting**
- [V]	- [V]	- [V]

Description: Displays the setpoint for the DC link voltage.

p0092 Clock synchronous operation pre-assignment/check / Clock sync op

CU_S110-DP, CU_S110-CAN, CU_S110-PN

Can be changed: C1(1)	**Calculated:** -	**Access level:** 1
Data type: Integer16	**Dyn. index:** -	**Func. diagram:** -
P-Group: -	**Unit group:** -	**Unit selection:** -
Not for motor type: -	**Scaling:** -	**Expert list:** 1
Min	**Max**	**Factory setting**
0	1	0

Description: Setting to pre-assign/check the sampling times for the internal controller clock cycles for clock-synchronous PROFIdrive operation.

p0092 = 1:

The controller clock cycles are set so that clock synchronous PROFIdrive operation is possible. If it is not possible to change the controller clock cycles of the clock-cycle synchronous PROFIdrive operation, then an appropriate message is output.

The pre-setting of the controller clock cycles can result in a derating of the Motor Module (e.g. p0115[0] = 400 µs --> 375 µs).

When the drive unit utilization (r9976) is calculated, its maximum computing time load has already been calculated during ramp-up for clock-cycle synchronous operation and taken into account in r9976 (V4.3 and higher), if fixed DCC run-time groups "Receive AFTER IF1 PROFIdrive PZD" and "Send BEFORE IF1 PROFIdrive PZD" are used.

p0092 = 0:

The controller clock cycles are set without any restrictions by the clock-cycle PROFIdrive operation (as for up to version V2.3).

When the drive unit utilization (r9976) is calculated, its maximum computing time load has already been calculated during ramp-up for non-clock-cycle-synchronous operation and taken into account in r9976 (V4.3 and higher), if fixed DCC run-time groups "Receive AFTER IF1 PROFIdrive PZD" and "Send BEFORE IF1 PROFIdrive PZD" are used.

Value:
0: No isochronous PROFIBUS
1: Isochronous PROFIBUS

Dependency: Refer to: p0115

Refer to: A01224

Caution: Only current controller clock cycles (p0115[0]) which are integers of 125 µs are permitted for isochronous mode.

In addition, current controller clock cycles 31.25 µs and 62.5 µs are possible.

Notice: p0092 only affects the automatic default for the clock cycles (p0115) in the drive. If the clock cycles are modified subsequently in expert mode (p0112 = 0), p0092 = 0 should be set so that the new values are not overwritten again by the automatic default when the parameters are downloaded.

The conditions for current controller clock cycle for isosynchronous operation must still be carefully ensured (refer under Caution!).

r0093 CO: Pole position angle electrically scaled / Pole pos el scale

SERVO_S110-DP, SERVO_S110-CAN, SERVO_S110-PN

Can be changed: -	**Calculated:** -	**Access level:** 3
Data type: FloatingPoint32	**Dyn. index:** -	**Func. diagram:** 4710
P-Group: Displays, signals	**Unit group:** -	**Unit selection:** -
Not for motor type: -	**Scaling:** p2005	**Expert list:** 1
Min	**Max**	**Factory setting**
- [°]	- [°]	- [°]

Description: Displays the scaled electrical pole position angle.

Dependency: Refer to: r0094, p0431, r1778

Notice: When the pole position angle (r0093) is output via test socket Tx (x = 0, 1, 2) to adjust the encoder (to determine the angular commutation offset) the test socket being used must be parameterized as follows:
p0771[x] = r0093
p0777[x] = 0 %
p0778[x] = 0 V
p0779[x] = 400 %
p0780[x] = 4 V
p0783[x] = 0 V
p0784[x] = 0
For p1821 = 1 (counter-clockwise direction of rotation) the following applies:
In order to adjust the encoder using the EMF method, the value, determined using the oscilloscope, must be inverted and then entered in p0431.

Note: For operation with encoder and pulse suppression, the following applies:
- the value is generated from r0094 + 180 °.
- this angle can be used to adjust the encoders of synchronous motors.
For pulse enable, the following applies:
- the value indicates the transformation angle used by the control + 180 °.
- this value is, contrary to r0094, also applicable (provides information) for encoderless operation and after a pole position identification routine.

r0094 CO: Transformation angle / Transformat_angle

SERVO_S110-DP, SERVO_S110-CAN, SERVO_S110-PN

Can be changed: -	**Calculated:** -	**Access level:** 3
Data type: FloatingPoint32	**Dyn. index:** -	**Func. diagram:** 1580, 1680, 1690, 4710, 6714, 6730, 6731, 6732
P-Group: Displays, signals	**Unit group:** -	**Unit selection:** -
Not for motor type: -	**Scaling:** p2005	**Expert list:** 1
Min	**Max**	**Factory setting**
- [°]	- [°]	- [°]

Description: Displays the transformation angle.

Dependency: Refer to: r0093, p0431, r1778

Note: The transformation angle corresponds to the electrical commutation angle.
If no pole position identification is carried out (p1982), and the encoder is adjusted, the following applies:
The encoder supplies the value and indicates the electrical angle of the flux position (d axis).

p0097 Select drive object type / Select DO type

CU_S110-DP, CU_S110-CAN, CU_S110-PN

Can be changed: C1(1)	**Calculated:** -	**Access level:** 1
Data type: Integer16	**Dyn. index:** -	**Func. diagram:** -
P-Group: Topology	**Unit group:** -	**Unit selection:** -
Not for motor type: -	**Scaling:** -	**Expert list:** 1
Min	**Max**	**Factory setting**
0	16	0

Description: Executes an automatic device configuration.
In so doing, p0099, p0107 and p0108 are appropriately set.

Value:
0: No selection
1: Drive object type SERVO
16: Drive object type SERVO HMI

Dependency: Refer to: A01330

Note: For p0097 = 0, p0099 is automatically set to the factory setting.
The possible settings are dependent upon the device type.

p0100 IEC/NEMA mot stds / IEC/NEMA mot stds

SERVO_S110-DP, SERVO_S110-CAN, SERVO_S110-PN

Can be changed: C2(1)	**Calculated:** -	**Access level:** 3
Data type: Integer16	**Dyn. index:** -	**Func. diagram:** -
P-Group: Converter	**Unit group:** -	**Unit selection:** -
Not for motor type: FEM	**Scaling:** -	**Expert list:** 1
Min	**Max**	**Factory setting**
0	1	0

Description: Defines whether the motor and drive converter power settings (e.g. rated motor power - p0307) are expressed in [kW] or [hp].

Depending on the selection, the rated motor frequency (p0310) is either set to 50 Hz or 60 Hz.

For p0100 = 0, the following applies: The power factor (p0308) should be parameterized.

For p0100 = 1, the following applies: The efficiency (p0309) should be parameterized.

Value:
0: IEC-Motor (50 Hz, SI units)
1: NEMA motor (60 Hz, US units)

Dependency: If p0100 is changed, all of the rated motor parameters are reset. Only then are possible unit changeovers made.

The units of all motor parameters are changed that are involved in the selection of IEC or NEMA (e.g. r0206, p0307, p0316, r0333, r0334, p0341, p0344, r1493, r1969).

Refer to: r0206, p0210, p0300, p0304, p0305, p0307, p0308, p0310, p0311, p0312, p0314, p0320, p0322, p0323, p0335, r0336, r0337, p0338, p1800

Note: The parameter can only be changed for vector control (p0107).

The parameter value is not reset when the factory setting is restored (p0010 = 30, p0970).

p0101[0...23] Drive object numbers / DO numbers

CU_S110-DP, CU_S110-CAN, CU_S110-PN

Can be changed: C1(1)	**Calculated:** -	**Access level:** 2
Data type: Unsigned16	**Dyn. index:** -	**Func. diagram:** -
P-Group: Topology	**Unit group:** -	**Unit selection:** -
Not for motor type: -	**Scaling:** -	**Expert list:** 1
Min	**Max**	**Factory setting**
0	62	0

Description: The parameter contains the object number via which every drive object can be addressed.

The number of an existing drive object is entered into each index.

Value = 0: No drive object is defined.

Index:
[0] = Drive object number Control Unit
[1] = Drive object number object 1
[2] = Drive object number object 2
[3] = Drive object number object 3
[4] = Drive object number object 4
[5] = Drive object number object 5
[6] = Drive object number object 6
[7] = Drive object number object 7
[8] = Drive object number object 8
[9] = Drive object number object 9
[10] = Drive object number object 10
[11] = Drive object number object 11
[12] = Drive object number object 12
[13] = Drive object number object 13
[14] = Drive object number object 14
[15] = Drive object number object 15
[16] = Drive object number object 16
[17] = Drive object number object 17
[18] = Drive object number object 18
[19] = Drive object number object 19
[20] = Drive object number object 20
[21] = Drive object number object 21
[22] = Drive object number object 22
[23] = Drive object number object 23

Note: The numbers are automatically assigned once and can no longer be changed as long as the object has not been deleted.

In the commissioning software, this object number cannot be entered using the expert list, but is automatically assigned when inserting an object.

r0102[0...1] Number of drive objects / DO count

CU_S110-DP, CU_S110-CAN, CU_S110-PN

Can be changed: -	**Calculated:** -	**Access level:** 2
Data type: Unsigned16	**Dyn. index:** -	**Func. diagram:** -
P-Group: Topology	**Unit group:** -	**Unit selection:** -
Not for motor type: -	**Scaling:** -	**Expert list:** 1
Min	**Max**	**Factory setting**
-	-	-

Description: Displays the number of existing or existing and prepared drive objects.

Index: [0] = Existing drive objects
[1] = Existing and prepared drive objects

Dependency: Refer to: p0101

Note: The numbers of the drive objects are in p0101.

Index 0:

Displays the number of drive objects that have already been set up.

Index 1:

Displays the number of drive objects that have already been set up and, in addition, the drive objects that still have to be set up.

p0108[0...23] Drive objects function module / DO function module

CU_S110-DP, CU_S110-CAN, CU_S110-PN

Can be changed: C1(2)	**Calculated:** -	**Access level:** 2
Data type: Unsigned32	**Dyn. index:** -	**Func. diagram:** -
P-Group: -	**Unit group:** -	**Unit selection:** -
Not for motor type: -	**Scaling:** -	**Expert list:** 1
Min	**Max**	**Factory setting**
-	-	0000 0000 0000 0000 0000 0000 0000 0000 bin

Description: The function module of an existing drive object is entered into each index (see p0101, p0107).

The following bits are available for the Control Unit (Index 0):

Bit 18: Free function blocks

Bit 29: CAN

Bit 30: COMM BOARD

Bit 31: PROFINET

For all other drive objects (Index > 0), the significance of the bits should be taken from the display parameters r0108 of the drive object.

Index: [0] = Function module Control Unit
[1] = Function module object 1
[2] = Function module object 2
[3] = Function module object 3
[4] = Function module object 4
[5] = Function module object 5
[6] = Function module object 6
[7] = Function module object 7
[8] = Function module object 8
[9] = Function module object 9
[10] = Function module object 10
[11] = Function module object 11
[12] = Function module object 12
[13] = Function module object 13
[14] = Function module object 14
[15] = Function module object 15
[16] = Function module object 16
[17] = Function module object 17
[18] = Function module object 18

[19] = Function module object 19
[20] = Function module object 20
[21] = Function module object 21
[22] = Function module object 22
[23] = Function module object 23

Bit field:

Bit	Signal name	1 signal	0 signal	FP
00	Bit 0	ON	OFF	-
01	Bit 1	ON	OFF	-
02	Bit 2	ON	OFF	-
03	Bit 3	ON	OFF	-
04	Bit 4	ON	OFF	-
05	Bit 5	ON	OFF	-
06	Bit 6	ON	OFF	-
07	Bit 7	ON	OFF	-
08	Bit 8	ON	OFF	-
09	Bit 9	ON	OFF	-
10	Bit 10	ON	OFF	-
11	Bit 11	ON	OFF	-
12	Bit 12	ON	OFF	-
13	Bit 13	ON	OFF	-
14	Bit 14	ON	OFF	-
15	Bit 15	ON	OFF	-
16	Bit 16	ON	OFF	-
17	Bit 17	ON	OFF	-
18	Bit 18	ON	OFF	-
19	Bit 19	ON	OFF	-
20	Bit 20	ON	OFF	-
21	Bit 21	ON	OFF	-
22	Bit 22	ON	OFF	-
23	Bit 23	ON	OFF	-
24	Bit 24	ON	OFF	-
25	Bit 25	ON	OFF	-
26	Bit 26	ON	OFF	-
27	Bit 27	ON	OFF	-
28	Bit 28	ON	OFF	-
29	Bit 29	ON	OFF	-
30	Bit 30	ON	OFF	-
31	Bit 31	ON	OFF	-

Note: A "function module" is a functional expansion of a drive object that can be activated when commissioning.

r0108 Drive objects function module / DO function module

SERVO_S110-CAN

Can be changed: -	**Calculated:** -	**Access level:** 2
Data type: Unsigned32	**Dyn. index:** -	**Func. diagram:** -
P-Group: Closed-loop control	**Unit group:** -	**Unit selection:** -
Not for motor type: -	**Scaling:** -	**Expert list:** 1
Min	**Max**	**Factory setting**
-	-	-

Description: Displays the activated function module for the particular drive object.

Bit field:

Bit	Signal name	1 signal	0 signal	FP
02	Closed-loop speed/torque control / n/M	Activated	Not activated	-
03	Closed-loop position control / Cl-loop pos ctrl	Activated	Not activated	-
04	Basic positioner / EPOS	Activated	Not activated	-
08	Extended setpoint channel / Ext setp	Activated	Not activated	-
10	Moment of inertia estimator / J_estimator	Activated	Not activated	-
13	Safety rotary axis / Safety rot	Activated	Not activated	-
14	Extended brake control / Ext brake	Activated	Not activated	-
16	Technology controller / Tech_ctrl	Activated	Not activated	-
17	Extended messages/monitoring / Ext msg	Activated	Not activated	-
18	Free function blocks / FBLOCKS	Activated	Not activated	-
29	CAN / CAN	Activated	Not activated	-

Note: A "function module" is a functional expansion of a drive object that can be activated when commissioning.

r0108 Drive objects function module / DO function module

SERVO_S110-DP

Can be changed: - **Calculated:** - **Access level:** 2
Data type: Unsigned32 **Dyn. index:** - **Func. diagram:** -
P-Group: Closed-loop control **Unit group:** - **Unit selection:** -
Not for motor type: - **Scaling:** - **Expert list:** 1

Min	Max	Factory setting
-	-	-

Description: Displays the activated function module for the particular drive object.

Bit field:

Bit	Signal name	1 signal	0 signal	FP
02	Closed-loop speed/torque control / n/M	Activated	Not activated	-
03	Closed-loop position control / Cl-loop pos ctrl	Activated	Not activated	-
04	Basic positioner / EPOS	Activated	Not activated	-
08	Extended setpoint channel / Ext setp	Activated	Not activated	-
10	Moment of inertia estimator / J_estimator	Activated	Not activated	-
13	Safety rotary axis / Safety rot	Activated	Not activated	-
14	Extended brake control / Ext brake	Activated	Not activated	-
16	Technology controller / Tech_ctrl	Activated	Not activated	-
17	Extended messages/monitoring / Ext msg	Activated	Not activated	-
18	Free function blocks / FBLOCKS	Activated	Not activated	-

Note: A "function module" is a functional expansion of a drive object that can be activated when commissioning.

r0108 Drive objects function module / DO function module

SERVO_S110-PN

Can be changed: - **Calculated:** - **Access level:** 2
Data type: Unsigned32 **Dyn. index:** - **Func. diagram:** -
P-Group: Closed-loop control **Unit group:** - **Unit selection:** -
Not for motor type: - **Scaling:** - **Expert list:** 1

Min	Max	Factory setting
-	-	-

Description: Displays the activated function module for the particular drive object.

Bit field:

Bit	Signal name	1 signal	0 signal	FP
02	Closed-loop speed/torque control / n/M	Activated	Not activated	-
03	Closed-loop position control / Cl-loop pos ctrl	Activated	Not activated	-
04	Basic positioner / EPOS	Activated	Not activated	-
08	Extended setpoint channel / Ext setp	Activated	Not activated	-
10	Moment of inertia estimator / J_estimator	Activated	Not activated	-
13	Safety rotary axis / Safety rot	Activated	Not activated	-
14	Extended brake control / Ext brake	Activated	Not activated	-
16	Technology controller / Tech_ctrl	Activated	Not activated	-
17	Extended messages/monitoring / Ext msg	Activated	Not activated	-
18	Free function blocks / FBLOCKS	Activated	Not activated	-
31	PROFINET / PROFINET	Activated	Not activated	-

Note: A "function module" is a functional expansion of a drive object that can be activated when commissioning.

p0115[0...6] Sampling times for internal control loops / t_sample int ctrl

SERVO_S110-DP, SERVO_S110-CAN, SERVO_S110-PN

Can be changed: C1(3)	**Calculated:** -	**Access level:** 4
Data type: FloatingPoint32	**Dyn. index:** -	**Func. diagram:** -
P-Group: Closed-loop control	**Unit group:** -	**Unit selection:** -
Not for motor type: -	**Scaling:** -	**Expert list:** 1
Min	**Max**	**Factory setting**
0.00 [µs]	16000.00 [µs]	[0] 250.00 [µs] [1] 250.00 [µs] [2] 250.00 [µs] [3] 4000.00 [µs] [4] 1000.00 [µs] [5] 4000.00 [µs] [6] 4000.00 [µs]

Description: Sets the sampling times for the control loops.

Index:
[0] = Current controller
[1] = Speed controller
[2] = Flux controller
[3] = Setpoint channel
[4] = Pos controller
[5] = Positioning
[6] = Technology controller

Note: The following sampling times are permitted:
p0115[0] = 250 µs
p0115[1] = 250 µs
p0115[2] = 250 µs
p0115[3] = 4000 µs
p0115[4] = 1000 µs (2000 µs)
p0115[5] = 4000 µs (8000 µs)
p0115[6] = 4000 µs

p0121[0...n] Power unit component number / PU comp_no

SERVO_S110-DP, SERVO_S110-CAN, SERVO_S110-PN

Can be changed: C1(4)	**Calculated:** -	**Access level:** 3
Data type: Unsigned8	**Dyn. index:** PDS	**Func. diagram:** -
P-Group: Data sets	**Unit group:** -	**Unit selection:** -
Not for motor type: -	**Scaling:** -	**Expert list:** 1
Min	**Max**	**Factory setting**
0	199	0

Description: The power unit data set is assigned to a power unit using this parameter.
This unique component number is assigned when parameterizing the topology.
Only component numbers can be entered into this parameter that correspond to a power unit.

Note: For parallel circuit configurations, the parameter index is assigned to a power unit.

p0124[0...23] Main component detection using LED / M_comp detect LED

CU_S110-DP, CU_S110-CAN, CU_S110-PN

Can be changed: U, T	**Calculated:** -	**Access level:** 2
Data type: Unsigned8	**Dyn. index:** -	**Func. diagram:** -
P-Group: Converter	**Unit group:** -	**Unit selection:** -
Not for motor type: -	**Scaling:** -	**Expert list:** 1
Min	**Max**	**Factory setting**
0	1	0

Description: Detection of the main components of the drive object selected via the index.

r0127[0...n] Power unit version EPROM data / PU EPROM version

SERVO_S110-DP, SERVO_S110-CAN, SERVO_S110-PN

Can be changed: -	**Calculated:** -	**Access level:** 3
Data type: Unsigned32	**Dyn. index:** PDS	**Func. diagram:** -
P-Group: Converter	**Unit group:** -	**Unit selection:** -
Not for motor type: -	**Scaling:** -	**Expert list:** 1
Min	**Max**	**Factory setting**
-	-	-

Description: Displays the version of the EPROM data of the power unit.
Dependency: Refer to: r0147
Note: For parallel circuit configurations, the parameter index is assigned to a power unit.

r0128[0...n] Power unit firmware version / PU FW version

SERVO_S110-DP, SERVO_S110-CAN, SERVO_S110-PN

Can be changed: -	**Calculated:** -	**Access level:** 3
Data type: Unsigned32	**Dyn. index:** PDS	**Func. diagram:** -
P-Group: Converter	**Unit group:** -	**Unit selection:** -
Not for motor type: -	**Scaling:** -	**Expert list:** 1
Min	**Max**	**Factory setting**
-	-	-

Description: Displays the firmware version of the power unit.
Dependency: Refer to: r0018, r0148, r0197, r0198
Note: Example:
The value 1010100 should be interpreted as V01.01.01.00.
For parallel circuit configurations, the parameter index is assigned to a power unit.

p0130 Number of Motor Data Sets (MDS) / MDS count

SERVO_S110-DP, SERVO_S110-CAN, SERVO_S110-PN

Can be changed: C1(3)	**Calculated:** -	**Access level:** 2
Data type: Unsigned8	**Dyn. index:** -	**Func. diagram:** 8575
P-Group: Data sets	**Unit group:** -	**Unit selection:** -
Not for motor type: -	**Scaling:** -	**Expert list:** 1
Min	**Max**	**Factory setting**
1	2	1

Description: Sets the number of Motor Data Sets (MDS).

p0131[0...n] Motor component number / Mot comp_no

SERVO_S110-DP, SERVO_S110-CAN, SERVO_S110-PN

Can be changed: C1(4)	**Calculated:** -	**Access level:** 3
Data type: Unsigned8	**Dyn. index:** MDS, p0130	**Func. diagram:** -
P-Group: Data sets	**Unit group:** -	**Unit selection:** -
Not for motor type: -	**Scaling:** -	**Expert list:** 1
Min	**Max**	**Factory setting**
0	199	0

Description: The motor data set is assigned to a motor using this parameter.
This unique component number is assigned when parameterizing the topology.
Only component numbers can be entered into this parameter that correspond to a motor.

p0139[0...2] Copy Motor Data Set MDS / Copy MDS

SERVO_S110-DP, SERVO_S110-CAN, SERVO_S110-PN

Can be changed: C2(15)	**Calculated:** -	**Access level:** 2
Data type: Unsigned8	**Dyn. index:** -	**Func. diagram:** 8575
P-Group: Data sets	**Unit group:** -	**Unit selection:** -
Not for motor type: -	**Scaling:** -	**Expert list:** 1
Min	**Max**	**Factory setting**
0	31	0

Description: Copying a Motor Data Set (MDS) into another.

Index: [0] = Source motor data set
[1] = Target motor data set
[2] = Start copying procedure

Note: Procedure:
1. In Index 0, enter which motor data set should be copied.
2. In Index 1, enter the motor data set data that is to be copied into.
3. Start copying: Set index 2 from 0 to 1.
p0139[2] is automatically set to 0 when copying is completed.
When copying, p0131 is not taken into account.

p0140 Number of Encoder Data Sets (EDS) / EDS count

SERVO_S110-DP, SERVO_S110-CAN, SERVO_S110-PN

Can be changed: C1(3)	**Calculated:** -	**Access level:** 2
Data type: Unsigned8	**Dyn. index:** -	**Func. diagram:** -
P-Group: Data sets	**Unit group:** -	**Unit selection:** -
Not for motor type: -	**Scaling:** -	**Expert list:** 1
Min	**Max**	**Factory setting**
1	2	1

Description: Sets the number of Encoder Data Sets (EDS).

Note: When parameterizing the drive with "no encoder" there must be at least one encoder data set (p0140 >= 1).

p0141[0...n] Encoder interface (Sensor Module) component number / Enc_interf comp_no

SERVO_S110-DP, SERVO_S110-CAN, SERVO_S110-PN

Can be changed: C1(4)	**Calculated:** -	**Access level:** 3
Data type: Unsigned8	**Dyn. index:** EDS, p0140	**Func. diagram:** 4704, 8570
P-Group: Data sets	**Unit group:** -	**Unit selection:** -
Not for motor type: -	**Scaling:** -	**Expert list:** 1
Min	**Max**	**Factory setting**
0	199	0

Description: This parameter is used to assign the encoder data set to an encoder evaluation (e.g. SMC).
This unique component number is assigned when parameterizing the topology.
Only component numbers can be entered into this parameter that correspond to an encoder evaluation.

Note: If the encoder evaluation and encoder are integrated (motor with DRIVE-CLiQ), then their component numbers are identical.
For an SMC, different component numbers are assigned for the SMC (p0141) and the (actual) encoder (p0142).

p0142[0...n] Encoder component number / Encoder comp_no

SERVO_S110-DP, SERVO_S110-CAN, SERVO_S110-PN

Can be changed: C1(4)	**Calculated:** -	**Access level:** 3
Data type: Unsigned8	**Dyn. index:** EDS, p0140	**Func. diagram:** 4704
P-Group: Data sets	**Unit group:** -	**Unit selection:** -
Not for motor type: -	**Scaling:** -	**Expert list:** 1
Min	**Max**	**Factory setting**
0	199	0

Description: This parameter is used to assign the encoder data set to an encoder.
This assignment is made using the unique component number that was assigned when parameterizing the topology.
Only component numbers can be entered into this parameter that correspond to an encoder.

Note: If the encoder evaluation and encoder are integrated (motor with DRIVE-CLiQ), then their component numbers are identical.
For an SMC, different component numbers are assigned for the SMC (p0141) and the (actual) encoder (p0142).

p0144[0...n] Sensor Module detection via LED / SM detection LED

SERVO_S110-DP, SERVO_S110-CAN, SERVO_S110-PN

Can be changed: U, T	**Calculated:** -	**Access level:** 2
Data type: Unsigned8	**Dyn. index:** EDS, p0140	**Func. diagram:** -
P-Group: Encoder	**Unit group:** -	**Unit selection:** -
Not for motor type: -	**Scaling:** -	**Expert list:** 1
Min	**Max**	**Factory setting**
0	1	0

Description: Detects the Sensor Module assigned to this drive and data set.
Note: While p0144 = 1, the READY LED flashes green/orange or red/orange with 2 Hz at the appropriate Sensor Module.

p0145[0...n] Activate/de-activate encoder interface / Enc_intf act/deact

SERVO_S110-DP, SERVO_S110-CAN, SERVO_S110-PN

Can be changed: C1(4), U, T	**Calculated:** -	**Access level:** 2
Data type: Integer16	**Dyn. index:** EDS, p0140	**Func. diagram:** -
P-Group: Data sets	**Unit group:** -	**Unit selection:** -
Not for motor type: -	**Scaling:** -	**Expert list:** 1
Min	**Max**	**Factory setting**
0	2	1

Description: Setting to activate/de-activate an encoder interface (Sensor Module).
Value:
0: De-activate component
1: Activate component
2: Component de-activate and not present
Recommendation: After inserting a component, before activating, first wait for Alarm A01317.
Dependency: Refer to: r0146
Refer to: A01314, A01317
Note: The de-activation of an encoder interface corresponds to the"parking encoder" function and has the same effect.
The activation of a component can be rejected if the component was inserted for the first time.
In this case, it is only possible to activate the component when the pulses for all of the drive objects are inhibited.
With the encoder interface for encoder 1 (motor encoder), the relevant drive object for writing the parameter must be in the "Ready for operation" state.
With the encoder interface for encoders 2 and 3, the parameter can also be written during operation.
Re value = 0, 2:
When a component is deactivated it no longer outputs any errors.
If value = 0:
The component was completely commissioned and is deactivated using this value. It can be removed from the DRIVE-CLiQ without any error.
If value = 1:
The component must be available for error-free operation.
If value = 2:
A component in a project generated offline and set to this value must never be inserted in the actual topology from the very start.
For components that comprise several individual components (e.g. Double Motor Modules), it is not permissible to set just one subset to this value.

r0146[0...n] Encoder interface active/inactive / Enc_intf act/inact

SERVO_S110-DP, SERVO_S110-CAN, SERVO_S110-PN

Can be changed: -	**Calculated:** -	**Access level:** 2
Data type: Integer16	**Dyn. index:** EDS, p0140	**Func. diagram:** -
P-Group: Data sets	**Unit group:** -	**Unit selection:** -
Not for motor type: -	**Scaling:** -	**Expert list:** 1
Min	**Max**	**Factory setting**
0	1	-

Description: Displays the "active" or "inactive" state of an encoder interface (Sensor Module).

Value: 0: Component inactive
1: Component active

Dependency: Refer to: p0145, p0480, p0897

r0147[0...n] Sensor Module EEPROM data version / SM EEPROM version

SERVO_S110-DP, SERVO_S110-CAN, SERVO_S110-PN

Can be changed: -	**Calculated:** -	**Access level:** 3
Data type: Unsigned32	**Dyn. index:** EDS, p0140	**Func. diagram:** -
P-Group: Encoder	**Unit group:** -	**Unit selection:** -
Not for motor type: -	**Scaling:** -	**Expert list:** 1
Min	**Max**	**Factory setting**
-	-	-

Description: Displays the version of the EEPROM data of the Sensor Module.

Dependency: Refer to: r0127

Note: Example:
The value 1010100 should be interpreted as V01.01.01.00.

r0148[0...n] Sensor Module firmware version / SM FW version

SERVO_S110-DP, SERVO_S110-CAN, SERVO_S110-PN

Can be changed: -	**Calculated:** -	**Access level:** 3
Data type: Unsigned32	**Dyn. index:** EDS, p0140	**Func. diagram:** -
P-Group: Encoder	**Unit group:** -	**Unit selection:** -
Not for motor type: -	**Scaling:** -	**Expert list:** 1
Min	**Max**	**Factory setting**
-	-	-

Description: Displays the firmware version of the Sensor Module.

Dependency: Refer to: r0018, r0128, r0197, r0198

Note: Example:
The value 1010100 should be interpreted as V01.01.01.00.

p0162 Reactor module component number / Reactor comp_no

SERVO_S110-DP, SERVO_S110-CAN, SERVO_S110-PN

Can be changed: C1(4)	**Calculated:** -	**Access level:** 3
Data type: Unsigned8	**Dyn. index:** -	**Func. diagram:** -
P-Group: Terminals	**Unit group:** -	**Unit selection:** -
Not for motor type: -	**Scaling:** -	**Expert list:** 1
Min	**Max**	**Factory setting**
0	199	0

Description: Sets the component number for the reactor module.
This unique component number is assigned when parameterizing the topology.
Only component numbers can be entered into this parameter that correspond to a filter module.

p0170 Number of Command Data Sets (CDS) / CDS count

SERVO_S110-DP, SERVO_S110-CAN, SERVO_S110-PN

Can be changed: C1(3)	**Calculated:** -	**Access level:** 2
Data type: Unsigned8	**Dyn. index:** -	**Func. diagram:** -
P-Group: Commands	**Unit group:** -	**Unit selection:** -
Not for motor type: -	**Scaling:** -	**Expert list:** 1
Min	**Max**	**Factory setting**
1	2	1

Description: Sets the number of Command Data Sets (CDS).

Note: It is possible to toggle between command parameters (BICO parameters) using this data set changeover.

p0180 Number of Drive Data Sets (DDS) / DDS count

SERVO_S110-DP, SERVO_S110-CAN, SERVO_S110-PN

Can be changed: C1(3)	**Calculated:** -	**Access level:** 2
Data type: Unsigned8	**Dyn. index:** -	**Func. diagram:** 8565
P-Group: Data sets	**Unit group:** -	**Unit selection:** -
Not for motor type: -	**Scaling:** -	**Expert list:** 1
Min	**Max**	**Factory setting**
1	2	1

Description: Sets the number of Drive Data Sets (DDS).

p0184 Encoder interface with pulse encoder / Enc_IF with PE

SERVO_S110-DP, SERVO_S110-CAN, SERVO_S110-PN

Can be changed: C1(4)	**Calculated:** -	**Access level:** 3
Data type: Unsigned8	**Dyn. index:** -	**Func. diagram:** -
P-Group: Data sets	**Unit group:** -	**Unit selection:** -
Not for motor type: -	**Scaling:** -	**Expert list:** 1
Min	**Max**	**Factory setting**
0	2	0

Description: Sets the encoder interface used as the pulse encoder.
0: No pulse encoder used
1: Encoder interface 1 used for pulse encoder
2: Encoder interface 2 used for pulse encoder

Dependency: Refer to: p0400

p0186[0...n] Motor Data Sets (MDS) number / MDS number

SERVO_S110-DP, SERVO_S110-CAN, SERVO_S110-PN

Can be changed: C1(4)	**Calculated:** -	**Access level:** 3
Data type: Unsigned8	**Dyn. index:** DDS, p0180	**Func. diagram:** 8575
P-Group: Data sets	**Unit group:** -	**Unit selection:** -
Not for motor type: -	**Scaling:** -	**Expert list:** 1
Min	**Max**	**Factory setting**
0	1	0

Description: Using the parameter, each Drive Data Set (= index) is assigned the associated Motor Data Set (MDS).
The parameter value therefore corresponds to the number of the assigned motor data set.

p0187[0...n] Encoder 1 encoder data set number / Enc 1 EDS number

SERVO_S110-DP, SERVO_S110-CAN, SERVO_S110-PN

Can be changed: C1(4)	**Calculated:** -	**Access level:** 3
Data type: Unsigned8	**Dyn. index:** DDS, p0180	**Func. diagram:** 1580, 8570
P-Group: Data sets	**Unit group:** -	**Unit selection:** -
Not for motor type: -	**Scaling:** -	**Expert list:** 1
Min	**Max**	**Factory setting**
0	99	99

Description: Assign a drive data set (= index) the corresponding encoder data set (EDS) for encoder 1.
The value corresponds to the number of the assigned encoder data set.
Example:
Encoder 1 in drive data set 2 should be assigned to encoder data set 0.
--> p0187[2] = 0

Note: A value of 99 means that no encoder has been assigned to this drive data set (not configured).

p0188[0...n] Encoder 2 encoder data set number / Enc 2 EDS number

SERVO_S110-DP, SERVO_S110-CAN, SERVO_S110-PN

Can be changed: C1(4)	**Calculated:** -	**Access level:** 3
Data type: Unsigned8	**Dyn. index:** DDS, p0180	**Func. diagram:** 1580, 8570
P-Group: Data sets	**Unit group:** -	**Unit selection:** -
Not for motor type: -	**Scaling:** -	**Expert list:** 1
Min	**Max**	**Factory setting**
0	99	99

Description: Assign a drive data set (= index) the corresponding encoder data set (EDS) for encoder 2.
The value corresponds to the number of the assigned encoder data set.
Example:
Encoder 2 in drive data set 2 should be assigned encoder data set 1.
--> p0188[2] = 1

Note: A value of 99 means that no encoder has been assigned to this drive data set (not configured).

r0192 Power unit firmware properties / PU FW property

SERVO_S110-DP, SERVO_S110-CAN, SERVO_S110-PN

Can be changed: -	**Calculated:** -	**Access level:** 3
Data type: Unsigned32	**Dyn. index:** -	**Func. diagram:** -
P-Group: Converter	**Unit group:** -	**Unit selection:** -
Not for motor type: -	**Scaling:** -	**Expert list:** 1
Min	**Max**	**Factory setting**
-	-	-

Description: Displays the properties supported by the power unit firmware.

Bit field:

Bit	Signal name	1 signal	0 signal	FP
00	Edge modulation possible	Yes	No	-
01	Free telegram can be selected	Yes	No	-
02	Smart mode possible for Active Line Module	Yes	No	-
03	Safety Integrated possible for VECTOR	Yes	No	-
06	Liquid cooling	Yes	No	-
07	SERVO pulse frequency changeover DDS-dependent	Yes	No	-
08	Simulation mode possible	Yes	No	-
09	Internal armature short-circuit possible	Yes	No	-
10	Autonomous internal armature short-circuit possible	Yes	No	-
11	Infeed temperature inputs X21.1/2	Yes	No	-
12	Integral scaled to half the gating unit clock cycle freq.	Yes	No	-
13	Filtering thermal power unit current limit possible	Yes	No	-
14	DC link compensation possible in power unit	Yes	No	-
15	PT100 temperature evaluation possible	Yes	No	-
16	Gating unit with pulse frequency wobbulation possible	Yes	No	-
17	Compound braking possible	Yes	No	-
18	Extended voltage range possible	Yes	No	-
19	Gating unit available with current limitation control	Yes	No	-
20	Component status possible	Yes	No	-
21	Temperature evaluation via Motor Module / CU terminals possible	Yes	No	-
22	Reduced device supply voltage possible	Yes	No	-
23	Current measurement oversampling available	Yes	No	-
24	Keep the relevant data for parking available	Yes	No	-
25	Internal fan operating hours counter available	Yes	No	-
26	Software gating unit in the CU is supported	Yes	No	-
27	Current controller dynamics higher	Yes	No	-

Notice: This information represents the characteristics/features of the power unit firmware. It does not provide information/data about the characteristics/features of the hardware (e.g. bit 06 = 1 means that although the firmware supports "liquid cooling", a power unit with liquid cooling does not have to be used).

Note: Re bit 09:

The Motor Module supports the internal armature short-circuit. The function is internally required for voltage protection (p1231 = 3).

Re bit 10:

The Motor Module supports the autonomous internal voltage protection. If the voltage protection function is internally activated (p1231 = 3) the Motor Module decides autonomously - using the DC link voltage - as to whether the short-circuit is activated.

Re bit 23:

The component supports the detection of current actual values (and the detection of valve close durations) with double clocking and phase shift.

r0196[0...255] DRIVE-CLiQ component status / DLQ comp status

CU_S110-DP, CU_S110-CAN, CU_S110-PN

Can be changed: -	**Calculated:** -	**Access level:** 3
Data type: Unsigned32	**Dyn. index:** -	**Func. diagram:** -
P-Group: -	**Unit group:** -	**Unit selection:** -
Not for motor type: -	**Scaling:** -	**Expert list:** 1
Min	**Max**	**Factory setting**
-	-	-

Description: Displays the status of DRIVE-CLiQ components.

r0196[0...1]: Not used

r0196[2]: Status of DRIVE-CLiQ component with component number 2

...

r0196[255]: Status of DRIVE-CLiQ component with component number 255

Note: Structure of status value: Bits 31 ... 08, 07, 06 ... 04, 03 ... 00

Re Bit 31 ... 08: Reserved

Re Bit 07: 1: Part of target topology, 0: Only in actual topology

Re Bit 06 ... 04: 1: Active, 0: Inactive or parked

Re bit 03 ... 00:

0: Component data not available.

1: Power-up, acyclic DRIVE-CLiQ communication (LED = orange).

2: Ready for operation, cyclic DRIVE-CLiQ communication (LED = green).

3: Alarm (LED = green).

4: Fault (LED = red).

5: Detection via LED and ready for operation (LED = green/orange).

6: Detection via LED and alarm (LED = green/orange).

7: Detection via LED and fault (LED = red/orange).

8: Downloading firmware (LED = green/red at 0.5 Hz).

9: Firmware downloading completed, Waiting for POWER ON (LED = green/red at 2.0 Hz).

r0197 Bootloader vers / Bootloader vers

CU_S110-DP, CU_S110-CAN, CU_S110-PN

Can be changed: -	**Calculated:** -	**Access level:** 4
Data type: Unsigned32	**Dyn. index:** -	**Func. diagram:** -
P-Group: Closed-loop control	**Unit group:** -	**Unit selection:** -
Not for motor type: -	**Scaling:** -	**Expert list:** 1
Min	**Max**	**Factory setting**
-	-	-

Description: Displays the bootloader version.

Dependency: Refer to: r0018, r0128, r0148, r0198

Note: Example:

The value 1010100 should be interpreted as V01.01.01.00.

r0198[0...1] BIOS/EEPROM data version / BIOS/EEPROM vers

CU_S110-DP, CU_S110-CAN, CU_S110-PN

Can be changed: -	**Calculated:** -	**Access level:** 4
Data type: Unsigned32	**Dyn. index:** -	**Func. diagram:** -
P-Group: Closed-loop control	**Unit group:** -	**Unit selection:** -
Not for motor type: -	**Scaling:** -	**Expert list:** 1
Min	**Max**	**Factory setting**
-	-	-

Description: Displays the BIOS and EEPROM data version.
r0198[0]: BIOS version
r0198[1]: EEPROM data version

Dependency: Refer to: r0018, r0128, r0148, r0197

Note: Example:
The value 1010100 should be interpreted as V01.01.01.00.

p0199[0...24] Drive object name / DO name

SERVO_S110-DP, SERVO_S110-CAN, SERVO_S110-PN

Can be changed: C1	**Calculated:** -	**Access level:** 2
Data type: Unsigned16	**Dyn. index:** -	**Func. diagram:** -
P-Group: -	**Unit group:** -	**Unit selection:** -
Not for motor type: -	**Scaling:** -	**Expert list:** 1
Min	**Max**	**Factory setting**
0	65535	0

Description: Freely assignable name for a drive object.
In the commissioning software, this name cannot be entered using the expert list, but is specified in the configuration assistant. The object name can be subsequently modified in the Project Navigator using standard Windows resources.

Note: The parameter is not influenced by setting the factory setting.

r0200[0...n] Power unit code number actual / PU code no. act

SERVO_S110-DP, SERVO_S110-CAN, SERVO_S110-PN

Can be changed: -	**Calculated:** -	**Access level:** 3
Data type: Unsigned16	**Dyn. index:** PDS	**Func. diagram:** -
P-Group: Converter	**Unit group:** -	**Unit selection:** -
Not for motor type: -	**Scaling:** -	**Expert list:** 1
Min	**Max**	**Factory setting**
-	-	-

Description: Displays the unique code number of the power unit.

Note: r0200 = p0201: No power unit found
For parallel circuit configurations, the parameter index is assigned to a power unit.

p0201[0...n] Power unit code number / PU code no

SERVO_S110-DP, SERVO_S110-CAN, SERVO_S110-PN

Can be changed: C2(2)	**Calculated:** -	**Access level:** 3
Data type: Unsigned16	**Dyn. index:** PDS	**Func. diagram:** -
P-Group: Converter	**Unit group:** -	**Unit selection:** -
Not for motor type: -	**Scaling:** -	**Expert list:** 1
Min	**Max**	**Factory setting**
0	65535	0

Description: Sets the actual code number from r0200 to acknowledge the power unit being used.
When commissioned for the first time, the code number is automatically transferred from r0200 into p0201.

Dependency: Refer to: F07815

Notice: When p0201 = 10000, the rated power unit data is reloaded and dependent parameters are set (e.g. p0205, p0210, p0230, p0857, p1800). p0201 is then automatically assigned the value of r0200 if the code number of the power unit could be read. A warm start must be performed after this procedure (automatically if necessary).

Note: The parameter is used to identify when the drive is being commissioned for the first time.
The power unit commissioning can only be exited (p0201 = r0200), if the actual and acknowledged code numbers are identical (p0010 = 2). However, if the comparator in p9906 or p9908 is at 2 (low) or 3 (minimum), the power unit commissioning is automatically set to p0201 = r0200 upon exiting.
When the code number is changed, the connection voltage (p0210) is checked and, if necessary, adjusted.
For parallel circuit configurations, the parameter index is assigned to a power unit.

r0203[0...15] Memory card name / Sp_card name

CU_S110-DP, CU_S110-CAN, CU_S110-PN

Can be changed: -	**Calculated:** -	**Access level:** 4
Data type: Unsigned8	**Dyn. index:** -	**Func. diagram:** -
P-Group: -	**Unit group:** -	**Unit selection:** -
Not for motor type: -	**Scaling:** -	**Expert list:** 1
Min	**Max**	**Factory setting**
-	-	-

Description: Displays the name of the memory card in ASCII code.
r0203[0]: Name character 1
...
r0203[15]: Name character 16
For the commissioning software, the ASCII characters are displayed uncoded.

Notice: An ASCII table (excerpt) can be found, for example, in the appendix to the List Manual.

r0203[0...n] Actual power unit type / PU actual type

SERVO_S110-DP, SERVO_S110-CAN, SERVO_S110-PN

Can be changed: -	**Calculated:** -	**Access level:** 3
Data type: Integer16	**Dyn. index:** PDS	**Func. diagram:** -
P-Group: Converter	**Unit group:** -	**Unit selection:** -
Not for motor type: -	**Scaling:** -	**Expert list:** 1
Min	**Max**	**Factory setting**
2	400	-

Description: Displays the type of power unit found.

Value:
2: MICROMASTER 440
3: MICROMASTER 411
4: MICROMASTER 410
5: MICROMASTER 436
6: MICROMASTER 440 PX
7: MICROMASTER 430
100: SINAMICS S
101: SINAMICS S (value)
102: SINAMICS S (combi)
112: PM220 (SINAMICS G120)
113: PM230 (SINAMICS G120)
114: PM240 (SINAMICS G120)
115: PM250 (SINAMICS G120)
116: PM260 (SINAMICS G120)
118: SINAMICS G120 Px
120: PM340 (SINAMICS S120)
133: SINAMICS G120C
150: SINAMICS G
200: SINAMICS GM
250: SINAMICS SM
260: SINAMICS SM120
300: SINAMICS GL
350: SINAMICS SL
400: SINAMICS DCM

Note: For parallel circuit configurations, the parameter index is assigned to a power unit.

r0204[0...n] Power unit hardware properties / PU HW property

SERVO_S110-DP, SERVO_S110-CAN, SERVO_S110-PN

Can be changed: - **Calculated:** - **Access level:** 3
Data type: Unsigned32 **Dyn. index:** PDS **Func. diagram:** -
P-Group: Converter **Unit group:** - **Unit selection:** -
Not for motor type: - **Scaling:** - **Expert list:** 1

Min	Max	Factory setting
-	-	-

Description: Displays the properties supported by the power unit hardware.

Bit field:

Bit	Signal name	1 signal	0 signal	FP
00	Device type	DC/AC device	AC/AC device	-
01	RFI filter available	Yes	No	-
02	Active Line Module available	Yes	No	-
03	Smart Line Module available	Yes	No	-
04	Basic Line Module available with thyristor bridge	Yes	No	-
05	Basic Line Module available with diode bridge	Yes	No	-
06	Liquid cooling with cooling unit (chassis PU)	Yes	No	-
07	F3E regenerative feedback into the line supply	Yes	No	-
08	Internal Braking Module	Yes	No	-
09	Different cooling type supported	Yes	No	-
12	Safe Brake Control (SBC) supported	No	Yes	-
13	Safety Integrated supported	Yes	No	-
14	Internal LC output filter	Yes	No	-

Note: For parallel circuit configurations, the parameter index is assigned to a power unit.

r0206[0...4] Rated power unit power / PU P_rated

SERVO_S110-DP, SERVO_S110-CAN, SERVO_S110-PN

Can be changed: - **Calculated:** - **Access level:** 2
Data type: FloatingPoint32 **Dyn. index:** - **Func. diagram:** -
P-Group: Converter **Unit group:** 14_6 **Unit selection:** p0100
Not for motor type: - **Scaling:** - **Expert list:** 1

Min	Max	Factory setting
- [kW]	- [kW]	- [kW]

Description: Displays the rated power unit power for various load duty cycles.

Index:
[0] = Rating plate
[1] = Load duty cycle with low overload
[2] = Load duty cycle with high overload
[3] = S1 cont duty cyc
[4] = S6 load duty cycle

Dependency:
IECdrives (p0100 = 0): Units kW
NEMA drives (p0100 = 1): Units hp
Refer to: p0100

r0207[0...4] Rated power unit current / PU PI_rated

SERVO_S110-DP, SERVO_S110-CAN, SERVO_S110-PN

Can be changed: - **Calculated:** - **Access level:** 2
Data type: FloatingPoint32 **Dyn. index:** - **Func. diagram:** 8014
P-Group: Converter **Unit group:** - **Unit selection:** -
Not for motor type: - **Scaling:** - **Expert list:** 1

Min	Max	Factory setting
- [Arms]	- [Arms]	- [Arms]

Description: Displays the rated power unit power for various load duty cycles.

Index:
[0] = Rating plate
[1] = Load duty cycle with low overload
[2] = Load duty cycle with high overload

[3] = S1 cont duty cyc
[4] = S6 load duty cycle

r0208 Rated power unit line supply voltage / PU U_rated

SERVO_S110-DP, SERVO_S110-CAN, SERVO_S110-PN

Can be changed: -	**Calculated:** -	**Access level:** 2
Data type: FloatingPoint32	**Dyn. index:** -	**Func. diagram:** -
P-Group: Converter	**Unit group:** -	**Unit selection:** -
Not for motor type: -	**Scaling:** -	**Expert list:** 1
Min	**Max**	**Factory setting**
- [Vrms]	- [Vrms]	- [Vrms]

Description: Displays the rated line supply voltage of the power unit.
r0208 = 400 : 380 - 480 V +/-10 %
r0208 = 500 : 500 - 600 V +/-10 %
r0208 = 690 : 660 - 690 V +/-10 %
For the Basic Line Module (BLM) the following applies:
r0208 = 690 : 500 - 690 V +/-10 %

r0209[0...4] Power unit maximum current / PU I_max

SERVO_S110-DP, SERVO_S110-CAN, SERVO_S110-PN

Can be changed: -	**Calculated:** -	**Access level:** 2
Data type: FloatingPoint32	**Dyn. index:** -	**Func. diagram:** 8750, 8850, 8950
P-Group: Converter	**Unit group:** -	**Unit selection:** -
Not for motor type: -	**Scaling:** -	**Expert list:** 1
Min	**Max**	**Factory setting**
- [Arms]	- [Arms]	- [Arms]

Description: Displays the maximum output current of the power unit.
Index: [0] = Catalog
[1] = Load duty cycle with low overload
[2] = Load duty cycle with high overload
[3] = S1 load duty cycle
[4] = S6 load duty cycle

p0210 Drive unit line supply voltage / V_connect

SERVO_S110-DP, SERVO_S110-CAN, SERVO_S110-PN

Can be changed: C2(2), T	**Calculated:** -	**Access level:** 3
Data type: Unsigned16	**Dyn. index:** -	**Func. diagram:** -
P-Group: Converter	**Unit group:** -	**Unit selection:** -
Not for motor type: -	**Scaling:** -	**Expert list:** 1
Min	**Max**	**Factory setting**
1 [V]	63000 [V]	600 [V]

Description: Sets the drive unit supply voltage.
AC/AC unit: The rms value of the phase-to-phase line supply voltage should be entered.
DC/AC unit: The rated DC voltage of the connection busbar should be entered.
Dependency: Set p1254, p1294 (automatic detection of the Vdc switch-on levels) = 0.
The switch-in thresholds of the Vdc_max controller are then directly determined using p0210.
Caution: If the line supply voltage is higher than the entered value, the Vdc controller may be automatically de-activated in some cases to prevent the motor from accelerating. In this case, an appropriate alarm is output.
Note: Setting ranges for p0210 as a function of the rated power unit voltage:
U_rated = 400 V:
- p0210 = 380 ... 480 V (AC/AC), 510 ... 720 V (DC/AC)
U_rated = 500 V:
- p0210 = 500 ... 600 V (AC/AC), 675 ... 900 V (DC/AC)
U_rated = 660 V ... 690 V:
- p0210 = 660 ... 690 V (AC/AC), 890 ... 1035 V (DC/AC)
U_rated = 500 V ... 690 V:
- p0210 = 500 ... 690 V (AC/AC), 675 ... 1035 V (DC/AC)

The pre-charging switch-in threshold for the DC link voltage (Vdc) is calculated from p0210:
Vdc_pre = p0210 * 0.82 * 1.35 (AC/AC)
Vdc_pre = p0210 * 0.82 (DC/AC)
The undervoltage thresholds for the DC link voltage (Vdc) are calculated from p0210 as a function of the rated power unit voltage:
U_rated = 400 V:
- U_min = p0210 * 0.78 (AC/AC) > 330 V, p0210 * 0.60 (DC/AC) > 380 V
U_rated = 500 V:
- U_min = p0210 * 0.76 (AC/AC) > 410 V
U_rated = 660 V ... 690 V:
- U_min = p0210 * 0.82 (AC/AC) > 565 V, p0210 * 0.63 (DC/AC) > 650 V
U_rated = 500 V ... 690 V:
- U_min = p0210 * 0.82 (AC/AC) > 420 V, p0210 * 0.63 (DC/AC) > 480 V

p0212 Power unit configuration / PU config

SERVO_S110-DP, SERVO_S110-CAN, SERVO_S110-PN

Can be changed: C2(2)	**Calculated:** -	**Access level:** 3
Data type: Unsigned16	**Dyn. index:** -	**Func. diagram:** -
P-Group: Converter	**Unit group:** -	**Unit selection:** -
Not for motor type: -	**Scaling:** -	**Expert list:** 1
Min	**Max**	**Factory setting**
-	-	0000 bin

Description: Sets the power unit configuration.

Bit field:

Bit	Signal name	1 signal	0 signal	FP
01	External pre-charging present	Yes	No	-

Dependency: Re bit 01 = 1:
The external pre-charging setting only affects the DC/AC power units.

Caution: Re bit 00:
Working with reduced input voltages de-activates undervoltage detection.

Note: Re bit 00 = 0:
It is not possible to reduce the supply voltage in p0210.
Re bit 00 = 1:
With this setting the supply voltage in p0210 can be reduced to 100 V.
Only operating mode p1300 = 19 is possible.
Re bit 01 = 0:
There is no external pre-charging of the DC/AC Motor Modules. The pre-charging monitoring is bypassed.
Re bit 01 = 1:
There is external pre-charging of the DC/AC Motor Modules. The pre-charging monitoring is calculated.

p0233 Power unit motor reactor / PU mot reactor

SERVO_S110-DP, SERVO_S110-CAN, SERVO_S110-PN

Can be changed: C2(2), U, T	**Calculated:** -	**Access level:** 4
Data type: FloatingPoint32	**Dyn. index:** -	**Func. diagram:** -
P-Group: Converter	**Unit group:** -	**Unit selection:** -
Not for motor type: -	**Scaling:** -	**Expert list:** 1
Min	**Max**	**Factory setting**
0.000 [mH]	1000.000 [mH]	0.000 [mH]

Description: Enter the inductance of a filter connected at the power unit output.

Dependency: This parameter is automatically pre-set when you select a filter via p0230 if a SIEMENS filter is defined for the power unit.

Note: The parameter cannot be changed if the power unit has an internal sine-wave filter.

p0234 Power unit sine-wave filter capacitance / PU sine filter C

SERVO_S110-DP, SERVO_S110-CAN, SERVO_S110-PN

Can be changed: C2(2), U, T	**Calculated:** -	**Access level:** 4
Data type: FloatingPoint32	**Dyn. index:** -	**Func. diagram:** -
P-Group: Converter	**Unit group:** -	**Unit selection:** -
Not for motor type: -	**Scaling:** -	**Expert list:** 1
Min	**Max**	**Factory setting**
0.000 [µF]	1000.000 [µF]	0.000 [µF]

Description: Enters the capacitance of a sine-wave filter connected at the power unit output.

Dependency: This parameter is automatically pre-set when you select a filter via p0230 if a SIEMENS filter is defined for the power unit.

Note: The parameter value includes the sum of all of the capacitances of a phase connected in series (phase - ground).
The parameter cannot be changed if the power unit has an internal sine-wave filter.

r0238 Internal power unit resistance / PU R internal

SERVO_S110-DP, SERVO_S110-CAN, SERVO_S110-PN

Can be changed: -	**Calculated:** -	**Access level:** 3
Data type: FloatingPoint32	**Dyn. index:** -	**Func. diagram:** -
P-Group: Converter	**Unit group:** -	**Unit selection:** -
Not for motor type: -	**Scaling:** -	**Expert list:** 1
Min	**Max**	**Factory setting**
- [ohm]	- [ohm]	- [ohm]

Description: Displays the internal resistance of the power unit (IGBT and line resistance).

Note: For a parallel circuit, the value corresponds to the resistance of a power unit.

p0249 Power unit cooling type / PU cool type

SERVO_S110-DP, SERVO_S110-CAN, SERVO_S110-PN

Can be changed: C2(1, 2)	**Calculated:** -	**Access level:** 4
Data type: Integer16	**Dyn. index:** -	**Func. diagram:** -
P-Group: Converter	**Unit group:** -	**Unit selection:** -
Not for motor type: -	**Scaling:** -	**Expert list:** 1
Min	**Max**	**Factory setting**
0	1	0

Description: Sets the cooling type for booksize compact power units.
This therefore defines whether for these power units, the internal air cooling is shut down and instead, the "Cold-Plate" cooling type is used.

Value:
0: Air cooling int
1: Cold-Plate

Note: For booksize compact power units, there is a 4 at the 5th position in the Order No.
The parameter is irrelevant for all other power unit types.

p0251[0...n] Operating hours counter power unit fan / PU fan t_oper

SERVO_S110-DP, SERVO_S110-CAN, SERVO_S110-PN

Can be changed: T	**Calculated:** -	**Access level:** 3
Data type: Unsigned32	**Dyn. index:** PDS	**Func. diagram:** -
P-Group: Modulation	**Unit group:** -	**Unit selection:** -
Not for motor type: -	**Scaling:** -	**Expert list:** 1
Min	**Max**	**Factory setting**
0 [h]	4294967295 [h]	0 [h]

Description: Displays the power unit fan operating hours.
The number of hours operated can only be reset to 0 in this parameter (e.g. after a fan has been replaced).

Dependency: Refer to: p0252

p0252 Maximum operating time power unit fan / PU fan t_oper max

SERVO_S110-DP, SERVO_S110-CAN, SERVO_S110-PN

Can be changed: T	**Calculated:** -	**Access level:** 4
Data type: Unsigned32	**Dyn. index:** -	**Func. diagram:** -
P-Group: Modulation	**Unit group:** -	**Unit selection:** -
Not for motor type: -	**Scaling:** -	**Expert list:** 1
Min	**Max**	**Factory setting**
0 [h]	100000 [h]	40000 [h]

Description: Sets the maximum operating time of the power unit fan.
The pre-alarm (warning) is output 500 hours before this set value.
The monitoring is de-activated with p0252 = 0.

Dependency: Refer to: p0251

Note: For chassis units, the maximum operating time in the power unit parameter is set to 50000 via the factory setting.

p0255[0...1] Power unit contactor monitoring time / PU cont t_monit

SERVO_S110-DP, SERVO_S110-CAN, SERVO_S110-PN

Can be changed: T	**Calculated:** -	**Access level:** 3
Data type: FloatingPoint32	**Dyn. index:** -	**Func. diagram:** -
P-Group: Modulation	**Unit group:** -	**Unit selection:** -
Not for motor type: -	**Scaling:** -	**Expert list:** 1
Min	**Max**	**Factory setting**
0 [ms]	6500 [ms]	0 [ms]

Description: Sets the monitoring time for internal monitoring of the contactor feedback contacts.

Index: [0] = Pre-charge contactor
[1] = Bypass contactor

Dependency: Refer to: F30060, F30061

Note: This parameter is only effective for chassis power units with 3 AC line connection and line contactors.
A value of 0 de-activates the associated line contactor monitoring.

p0278 DC link voltage undervoltage threshold reduction / Vdc U_under red

SERVO_S110-DP, SERVO_S110-CAN, SERVO_S110-PN

Can be changed: T	**Calculated:** -	**Access level:** 3
Data type: FloatingPoint32	**Dyn. index:** -	**Func. diagram:** -
P-Group: Converter	**Unit group:** -	**Unit selection:** -
Not for motor type: -	**Scaling:** -	**Expert list:** 1
Min	**Max**	**Factory setting**
-80 [V]	0 [V]	0 [V]

Description: Sets the absolute value by which the threshold to initiate the undervoltage fault (F30003) is reduced.

Dependency: Refer to: p0210, r0296
Refer to: F30003

Notice: When using a Control Supply Module (CSM) for 24 V supply from the DC link, the minimum continuous DC link voltage may not lie below 430 V. DC link voltages in the range 300 ... 430 V are permissible up to a duration of 1 min.
For chassis power units, this parameter has no significance.

Note: The resulting shutdown threshold can be read in r0296 and is dependent on the selected rated voltage (p0210) and the power unit being used.

p0287[0...1] Ground fault monitoring thresholds / Gnd flt threshold

SERVO_S110-DP, SERVO_S110-CAN, SERVO_S110-PN

Can be changed: T	**Calculated:** -	**Access level:** 3
Data type: FloatingPoint32	**Dyn. index:** -	**Func. diagram:** -
P-Group: -	**Unit group:** -	**Unit selection:** -
Not for motor type: -	**Scaling:** -	**Expert list:** 1
Min	**Max**	**Factory setting**
0.0 [%]	100.0 [%]	[0] 6.0 [%] [1] 16.0 [%]

Description: Sets the shutdown thresholds for the ground fault monitoring.

The setting is made as a percentage of the maximum power unit current (r0209).

Index: [0] = Threshold at which pre-charging starts
[1] = Threshold at which pre-charging stops

Dependency: Refer to: F30021

Note: The parameter only applies to booksize and chassis power units.
De-activating the ground fault monitoring:
- Sequence: --> p0287[1] = 0 --> p0287[0] = 0
- irrespective of the firmware version of the power unit.
Sets the thresholds:
- the prerequisite is at least firmware version 2.2 of the power unit.

r0289 CO: Maximum power unit output current / PU I_outp max

SERVO_S110-DP, SERVO_S110-CAN, SERVO_S110-PN

Can be changed: -	**Calculated:** -	**Access level:** 3
Data type: FloatingPoint32	**Dyn. index:** -	**Func. diagram:** -
P-Group: Displays, signals	**Unit group:** -	**Unit selection:** -
Not for motor type: -	**Scaling:** p2002	**Expert list:** 1
Min	**Max**	**Factory setting**
- [Arms]	- [Arms]	- [Arms]

Description: Displays the actual maximum output current of the power unit taking into account derating factors.

p0290 Power unit overload response / PU overld response

SERVO_S110-DP, SERVO_S110-CAN, SERVO_S110-PN

Can be changed: T	**Calculated:** -	**Access level:** 3
Data type: Integer16	**Dyn. index:** -	**Func. diagram:** 8014
P-Group: Converter	**Unit group:** -	**Unit selection:** -
Not for motor type: -	**Scaling:** -	**Expert list:** 1
Min	**Max**	**Factory setting**
0	3	0

Description: Sets the response to a thermal overload condition of the power unit.
The following quantities can result in a response to thermal overload:
- heat sink temperature (r0037.0)
- chip temperature (r0037.1)
- power unit overload I2T (r0036)
Possible measures to avoid thermal overload:
- reduce the output current limit r0289 and r0067 (for closed-loop speed/velocity or torque/force control) or the output frequency (for U/f control) indirectly via the output current limit and the intervention of the current limiting controller).
- reduce the pulse frequency (only for vector control).
A reduction, if parameterized, is always realized after an appropriate alarm is output.

Value:
0: Reduce output current or output frequency
1: No reduction shutdown when overload threshold is reached
2: Reduce I_output or f_output and f_pulse (not using I2t)
3: Reduce the pulse frequency (not using I2t)

Dependency: If a sine-wave filter is parameterized as output filter (p0230 = 3, 4), then only responses can be selected without pulse frequency reduction (p0290 = 0, 1).
If a fault or alarm is present, then r2135.13 or r2135.15 is set.
Refer to: r0036, r0037, p0108, r0108, r2135
Refer to: A05000, A05001, A07805

Caution: If the thermal overload of the power unit is not sufficiently reduced by the actions taken, the drive is always shut down. This means that the power unit is always protected irrespective of the setting of this parameter.

Note: The setting p0290 = 0, 2 is only practical if the load decreases with decreasing speed (e.g. for applications with variable torque such as for pumps and fans).
Under overload conditions, the current and torque limit are reduced, and therefore the motor is braked and forbidden speed ranges (e.g. minimum speed p1080 and suppression [skip] speeds p1091 ... p1094) can be passed through.
For p0290 = 2, 3, the I2t overload detection of the power unit does not influence the responses.
When the motor data identification routine is selected, p0290 cannot be changed.

p0294 Power unit alarm with I2t overload / PU I2t alrm thresh

SERVO_S110-DP, SERVO_S110-CAN, SERVO_S110-PN

Can be changed: U, T	**Calculated:** -	**Access level:** 3
Data type: FloatingPoint32	**Dyn. index:** -	**Func. diagram:** 8014
P-Group: Converter	**Unit group:** -	**Unit selection:** -
Not for motor type: -	**Scaling:** -	**Expert list:** 1
Min	**Max**	**Factory setting**
10.0 [%]	100.0 [%]	95.0 [%]

Description: Sets the alarm threshold for the I2t power unit overload.
Drive:
If this threshold is exceeded, an overload alarm is generated and the system responds as parameterized in p0290.
Infeed:
When the threshold value is exceeded, only an overload alarm is output.

Dependency: Refer to: r0036, p0290
Refer to: A07805

Note: The I2t fault threshold is 100 %. If this value is exceeded, fault F30005 is output.

p0295 Fan run-on time / Fan run-on time

SERVO_S110-DP, SERVO_S110-CAN, SERVO_S110-PN

Can be changed: U, T	**Calculated:** -	**Access level:** 1
Data type: FloatingPoint32	**Dyn. index:** -	**Func. diagram:** -
P-Group: Converter	**Unit group:** -	**Unit selection:** -
Not for motor type: -	**Scaling:** -	**Expert list:** 1
Min	**Max**	**Factory setting**
0 [s]	600 [s]	0 [s]

Description: Sets the fan run-on time after the pulses for the power unit have been canceled.

Note: - Under certain circumstances, the fan can continue to run for longer than was set (e.g. as a result of the excessively high heat sink temperature).
- For values less than 1 s, a 1 s run on time for the fan is active.

r0296 DC link voltage undervoltage threshold / Vdc U_lower_thresh

SERVO_S110-DP, SERVO_S110-CAN, SERVO_S110-PN

Can be changed: -	**Calculated:** -	**Access level:** 2
Data type: Unsigned16	**Dyn. index:** -	**Func. diagram:** -
P-Group: Converter	**Unit group:** -	**Unit selection:** -
Not for motor type: -	**Scaling:** -	**Expert list:** 1
Min	**Max**	**Factory setting**
- [V]	- [V]	- [V]

Description: If the DC link voltage falls below this threshold, the Motor Module is shut down due to a DC link undervoltage condition (F30003).

Dependency: Refer to: p0278
Refer to: F30003

Note: The value depends on the device type and the selected rated voltage p0210.
For booksize units, the following applies:
The undervoltage threshold can be reduced with p0278.

r0297 DC link voltage overvoltage threshold / Vdc U_upper_thresh

SERVO_S110-DP, SERVO_S110-CAN, SERVO_S110-PN

Can be changed: -	**Calculated:** -	**Access level:** 2
Data type: Unsigned16	**Dyn. index:** -	**Func. diagram:** 8750, 8760, 8850, 8864, 8950, 8964
P-Group: Converter	**Unit group:** -	**Unit selection:** -
Not for motor type: -	**Scaling:** -	**Expert list:** 1
Min	**Max**	**Factory setting**
- [V]	- [V]	- [V]

Description: If the DC link voltage exceeds the threshold specified here, the drive unit is tripped due to DC link overvoltage.

Dependency: Refer to: F30002

p0300[0...n] Motor type selection / Mot type sel

SERVO_S110-DP, SERVO_S110-CAN, SERVO_S110-PN

Can be changed: C2(1, 3)	**Calculated:** -	**Access level:** 1
Data type: Integer16	**Dyn. index:** MDS, p0130	**Func. diagram:** 6310
P-Group: Motor	**Unit group:** -	**Unit selection:** -
Not for motor type: -	**Scaling:** -	**Expert list:** 1
Min	**Max**	**Factory setting**
0	10001	0

Description: Selects the motor type or start to read in the motor parameters for a motor with DRIVE-CLiQ (p0300 = 10000).

For p0300 < 10000 the following applies:

The first digit of the parameter value always defines the general motor type and corresponds to the third-party motor belonging to a motor list:

1 = Rotating induction motor

2 = Rotating synchronous motor

The type information must be entered to filter motor-specific parameters and to optimize the operating characteristics and behavior. For example, for synchronous motors, power factor (p0308) is neither used nor displayed (in the BOP/AOP).

Value:

0: No motor
1: Induction motor (rotating)
2: Synchronous motor (rotating, permanent-magnet)
104: 1PH4 induction motor
107: 1PH7 induction motor
108: 1PH8 induction motor
111: Induction motor (rotary) for OEMs
200: 1PH8 synchronous motor
206: 1FT6 synchronous motor
207: 1FT7 synchronous motor
222: Synchronous motor (rotary) for OEMs
231: 1FG1 synchronous motor
236: 1FK6 synchronous motor
237: 1FK7 synchronous motor
444: Synchronous motor (linear) for OEMs
10000: Motor with DRIVE-CLiQ
10001: Motor with DRIVE-CLiQ 2nd data set

Dependency: When the motor type is changed, the code number in p0301 may be reset to 0.

If p0300 is changed during quick commissioning (p0010 = 1), then the matching technological application (p0500) is automatically pre-assigned. This does not occur when commissioning the motor (p0010 = 3). If p0300 = 10000 is written for a parameter download, p0500 is pre-assigned with DRIVE-CLiQ corresponding to the motor type.

Refer to: p0301

Caution: If a catalog motor is selected (p0300 >= 100) and an associated motor code number (p0301), then the parameters that are associated with this list cannot be changed (write protection). The write protection is canceled if the motor type p0300 is set to a non-Siemens motor that matches p0301 (e.g. p0300 = 2 for p0301 = 2xxxx). Write protection is automatically canceled when the results of motor data identification are copied to the motor parameters.

The motor type of a catalog motor corresponds to the upper three digits of the code number or the following assignment (if the particular motor type is listed):

Type/code number ranges

102 / 102xx, 112xx, 122xx

104 / 104xx, 114xx, 124xx

107 / 107xx, 117xx, 127xx

108 / 108xx, 118xx, 128xx

134 / 134xx, 144xx, 154xx

136 / 136xx, 146xx, 156xx

166 / 166xx, 176xx, 186xx

200 / 200xx, 210xx, 220xx

204 / 204xx, 214xx, 224xx

206 / 206xx, 216xx, 226xx

207 / 207xx, 217xx, 227xx

261 / 261xx, 262xx

283 / 283xx, 293xx
286 / 286xx, 296xx
403 / 403xx, 413xx
406 / 406xx, 416xx, 426xx

Notice: If required, the list of motor codes/encoder codes can be found in the Appendix of the List Manual.

Note: With p0300 = 10000, for a motor with DRIVE-CLiQ, the motor parameters are automatically downloaded, with p0300 = 10001, the motor parameters of a second data set (if available).

If a motor type has not been selected (p0300 = 0), then the drive commissioning routine cannot be exited.

A motor type with a value above p0300 >= 100 describes motors for which a motor parameter list exists.

Motor types with a value below p0300 < 100 correspond to the selection of a third-party motor. When appropriately selected, this means that the motor parameters are pre-assigned the settings for a third-party motor.

This also applies for parameters for a motor with DRIVE-CLiQ. In this case p0300 can only be set to p0300 = 10000 or 10001 (read motor parameters) or to the corresponding non-Siemens motor (first digit of the motor code number) in order to be able to cancel the write protection.

p0301[0...n] Motor code number selection / Mot code No. sel

SERVO_S110-DP, SERVO_S110-CAN, SERVO_S110-PN

Can be changed: C2(1, 3)	**Calculated:** -	**Access level:** 1
Data type: Unsigned16	**Dyn. index:** MDS, p0130	**Func. diagram:** -
P-Group: Motor	**Unit group:** -	**Unit selection:** -
Not for motor type: FEM	**Scaling:** -	**Expert list:** 1
Min	**Max**	**Factory setting**
0	65535	0

Description: The parameter is used to select a motor from a motor parameter list.

When changing the code number (with the exception to the value 0), all of the motor parameters are pre-assigned from the internally available parameter lists.

Dependency: Code numbers can only be selected for motor types that correspond to the motor type selected in p0300. For 1PH2, 1PH4, 1PH7, 1PM4, 1PM6, 1FT6 motors, code numbers are also possible, whose fourth decimal position is greater by a value of 1 or 2 than the matching motor type in p0300. For 1FE1 motors, the third decimal position can be higher by a value of 1.

Refer to: p0300

Notice: If required, the list of motor codes/encoder codes can be found in the Appendix of the List Manual.

Note: The motor code number can only be changed if the matching catalog motor was first selected in p0300.

For a motor with DRIVE-CLiQ, p0301 cannot be changed. In this case, p0301 is automatically written to the code number of the motor parameter read in (r0302) if p0300 is set to 10000.

When selecting a catalog motor (p0300 >= 100), drive commissioning can only be exited if a code number is selected.

If, for direct drives, the motor code number (p0301) is changed, this does not automatically result in the angular commutation offset being determined (p0431).

r0302[0...n] Motor code number of motor with DRIVE-CLiQ / Motor code Mot DLQ

SERVO_S110-DP, SERVO_S110-CAN, SERVO_S110-PN

Can be changed: -	**Calculated:** -	**Access level:** 2
Data type: Unsigned16	**Dyn. index:** MDS, p0130	**Func. diagram:** -
P-Group: Motor	**Unit group:** -	**Unit selection:** -
Not for motor type: -	**Scaling:** -	**Expert list:** 1
Min	**Max**	**Factory setting**
-	-	-

Description: Displays the motor code number from the saved motor data from a motor with DRIVE-CLiQ.

Note: Drive commissioning can only be exited if the code number that was downloaded (r0302) matches the stored code number (p0301). If the numbers differ, then the motor data set should be re-loaded using p0300 = 10000.

The motor data are always expected from the first encoder that is assigned to the drive data sets (refer to p0187 = encoder 1) data set number.

The value is not updated cyclically but only on specific events (e.g. update DRIVE-CLiQ device).

r0302 = 0: No motor with DRIVE-CLiQ found

r0303[0...n] Motor with DRIVE-CLiQ status word / Motor w DLQ ZSW

SERVO_S110-DP, SERVO_S110-CAN, SERVO_S110-PN

Can be changed: -	**Calculated:** -	**Access level:** 2
Data type: Unsigned16	**Dyn. index:** MDS, p0130	**Func. diagram:** -
P-Group: Motor	**Unit group:** -	**Unit selection:** -
Not for motor type: -	**Scaling:** -	**Expert list:** 1
Min	**Max**	**Factory setting**
-	-	-

Description: Displays the status word of the automatic motor parameter sensing of a motor with DRIVE-CLiQ.
Motor parameter sensing takes place in the following events if the SMI is connected to the Motor Module and the encoder is activated (p0145):
- Warm restart
- downloading projects.
- POWER ON (off/on).
- where p0300 = 10000, 10001.

Bit field:

Bit	Signal name	1 signal	0 signal	FP
00	Motor data set selected	MDS1	MDS0	-
01	Motor connection type	Delta	Star	-
02	Windings can be changed	Yes	No	-
03	Windings can be changed number	2	0	-

Dependency: Refer to: p0145, p0300
Note: SMI: SINAMICS Sensor Module Integrated

p0304[0...n] Rated motor voltage / Mot U_rated

SERVO_S110-DP, SERVO_S110-CAN, SERVO_S110-PN

Can be changed: C2(1, 3)	**Calculated:** -	**Access level:** 1
Data type: FloatingPoint32	**Dyn. index:** MDS, p0130	**Func. diagram:** 6300, 6724
P-Group: Motor	**Unit group:** -	**Unit selection:** -
Not for motor type: -	**Scaling:** -	**Expert list:** 1
Min	**Max**	**Factory setting**
0 [Vrms]	20000 [Vrms]	0 [Vrms]

Description: Sets the rated motor voltage (rating plate).
Dependency: Refer to: p0349
Caution: When selecting a catalog motor (p0301), this parameter is automatically pre-assigned and is write protected. Information in p0300 should be carefully observed when removing write protection.
Note: When the parameter value is entered the connection type of the motor (star-delta) must be taken into account.

p0305[0...n] Rated motor current / Mot I_rated

SERVO_S110-DP, SERVO_S110-CAN, SERVO_S110-PN

Can be changed: C2(1, 3)	**Calculated:** -	**Access level:** 1
Data type: FloatingPoint32	**Dyn. index:** MDS, p0130	**Func. diagram:** 6300
P-Group: Motor	**Unit group:** -	**Unit selection:** -
Not for motor type: -	**Scaling:** -	**Expert list:** 1
Min	**Max**	**Factory setting**
0.00 [Arms]	10000.00 [Arms]	0.00 [Arms]

Description: Sets the rated motor current (rating plate).
Dependency: Refer to: p0349
Caution: When selecting a catalog motor (p0301), this parameter is automatically pre-assigned and is write protected. Information in p0300 should be carefully observed when removing write protection.
Notice: If p0305 is changed during quick commissioning (p0010 = 1), then the maximum current p0640 is pre-assigned accordingly. This is not the case when commissioning the motor (p0010 = 3).
Note: When the parameter value is entered the connection type of the motor (star-delta) must be taken into account.

p0307[0...n] Rated motor power / Mot P_rated

SERVO_S110-DP, SERVO_S110-CAN, SERVO_S110-PN

Can be changed: C2(1, 3)	**Calculated:** -	**Access level:** 1
Data type: FloatingPoint32	**Dyn. index:** MDS, p0130	**Func. diagram:** -
P-Group: Motor	**Unit group:** 14_6	**Unit selection:** p0100
Not for motor type: -	**Scaling:** -	**Expert list:** 1
Min	**Max**	**Factory setting**
0.00 [kW]	100000.00 [kW]	0.00 [kW]

Description: Sets the rated motor power (rating plate).

Dependency: IECdrives (p0100 = 0): Units kW
NEMA drives (p0100 = 1): Units hp
Refer to: p0100

Caution: When selecting a catalog motor (p0301), this parameter is automatically pre-assigned and is write protected. Information in p0300 should be carefully observed when removing write protection.

p0308[0...n] Rated motor power factor / Mot cos_phi_rated

SERVO_S110-DP, SERVO_S110-CAN, SERVO_S110-PN

Can be changed: C2(1, 3)	**Calculated:** -	**Access level:** 1
Data type: FloatingPoint32	**Dyn. index:** MDS, p0130	**Func. diagram:** -
P-Group: Motor	**Unit group:** -	**Unit selection:** -
Not for motor type: PMSM, REL	**Scaling:** -	**Expert list:** 1
Min	**Max**	**Factory setting**
0.000	1.000	0.000

Description: Sets the rated motor power factor (cos phi, rating plate).
For a parameter value of 0.000, the power factor is internally calculated and displayed in r0332.

Dependency: This parameter is only available for IEC motors (p0100 = 0).
Refer to: p0100, r0332

Caution: When selecting a catalog motor (p0301), this parameter is automatically pre-assigned and is write protected. Information in p0300 should be carefully observed when removing write protection.

Note: The parameter is not used for synchronous motors (p0300 = 2xx).

p0310[0...n] Rated motor frequency / Mot f_rated

SERVO_S110-DP, SERVO_S110-CAN, SERVO_S110-PN

Can be changed: C2(1, 3)	**Calculated:** -	**Access level:** 1
Data type: FloatingPoint32	**Dyn. index:** MDS, p0130	**Func. diagram:** -
P-Group: Motor	**Unit group:** -	**Unit selection:** -
Not for motor type: -	**Scaling:** -	**Expert list:** 1
Min	**Max**	**Factory setting**
0.00 [Hz]	3000.00 [Hz]	0.00 [Hz]

Description: Sets the rated motor frequency (rating plate).

Dependency: The number of pole pairs (r0313) is automatically re-calculated when the parameter is changed (together with p0311), if p0314 = 0.
If p0310 is changed during quick commissioning (p0010 = 1), then the maximum speed p1082, which is also associated with quick commissioning, is pre-assigned accordingly.
Refer to: p0311, r0313, p0314

Caution: When selecting a catalog motor (p0301), this parameter is automatically pre-assigned and is write protected. Information in p0300 should be carefully observed when removing write protection.

Notice: If p0310 is changed during quick commissioning (p0010 = 1), the maximum speed p1082, which is also associated with quick commissioning, is pre-assigned accordingly. This is not the case when commissioning the motor (p0010 = 3).

Note: For synchronous motors, the parameter is not required and must therefore be pre-assigned zero. For p0310 = 0, it is not possible to calculate the pole pair; instead, it must be entered in p0314.

p0311[0...n] Rated motor speed / Mot n_rated

SERVO_S110-DP, SERVO_S110-CAN, SERVO_S110-PN

Can be changed: C2(1, 3)	**Calculated:** -	**Access level:** 1
Data type: FloatingPoint32	**Dyn. index:** MDS, p0130	**Func. diagram:** -
P-Group: Motor	**Unit group:** -	**Unit selection:** -
Not for motor type: -	**Scaling:** -	**Expert list:** 1
Min	**Max**	**Factory setting**
0.0 [rpm]	210000.0 [rpm]	0.0 [rpm]

Description: Sets the rated motor speed (rating plate).

Dependency: If p0311 is changed and for p0314 = 0, the pole pair (r0313) is re-calculated automatically.
Refer to: p0310, r0313, p0314

Caution: When selecting a catalog motor (p0301), this parameter is automatically pre-assigned and is write protected. Information in p0300 should be carefully observed when removing write protection.

Notice: If p0311 is changed during quick commissioning (p0010 = 1), the maximum speed p1082, which is also associated with quick commissioning, is pre-assigned accordingly. This is not the case when commissioning the motor (p0010 = 3).

p0312[0...n] Rated motor torque / Mot M_rated

SERVO_S110-DP, SERVO_S110-CAN, SERVO_S110-PN

Can be changed: C2(3)	**Calculated:** -	**Access level:** 3
Data type: FloatingPoint32	**Dyn. index:** MDS, p0130	**Func. diagram:** -
P-Group: Motor	**Unit group:** 7_4	**Unit selection:** p0100
Not for motor type: ASM, REL, FEM	**Scaling:** -	**Expert list:** 1
Min	**Max**	**Factory setting**
0.00 [Nm]	1000000.00 [Nm]	0.00 [Nm]

Description: Sets the rated motor torque (rating plate).

Caution: When selecting a catalog motor (p0301), this parameter is automatically pre-assigned and is write protected. Information in p0300 should be carefully observed when removing write protection.

r0313[0...n] Motor pole pair number, actual (or calculated) / Mot PolePairNo act

SERVO_S110-DP, SERVO_S110-CAN, SERVO_S110-PN

Can be changed: -	**Calculated:** -	**Access level:** 2
Data type: Unsigned16	**Dyn. index:** MDS, p0130	**Func. diagram:** 5300
P-Group: Motor	**Unit group:** -	**Unit selection:** -
Not for motor type: -	**Scaling:** -	**Expert list:** 1
Min	**Max**	**Factory setting**
-	-	-

Description: Displays the number of motor pole pairs. The value is used for internal calculations.
r0313 = 1: 2-pole motor
r0313 = 2: 4-pole motor, etc.

Dependency: For p0314 > 0, the entered value is displayed in r0313.
For p0314 = 0, the pole pair number (r0313) is automatically calculated from the rated frequency (p0310) and the rated speed (p0311).
Refer to: p0310, p0311, p0314

Note: For the automatic calculation, the pole pair number is set to the value of 2 if the rated speed or the rated frequency is zero.

p0314[0...n] Motor pole pair number / Mot pole pair No.

SERVO_S110-DP, SERVO_S110-CAN, SERVO_S110-PN

Can be changed: C2(1, 3)	**Calculated:** -	**Access level:** 1
Data type: Unsigned16	**Dyn. index:** MDS, p0130	**Func. diagram:** -
P-Group: Motor	**Unit group:** -	**Unit selection:** -
Not for motor type: -	**Scaling:** -	**Expert list:** 1
Min	**Max**	**Factory setting**
0	4000	0

Description: Sets the motor pole pair number.

p0314 = 1: 2-pole motor

p0314 = 2: 4-pole motor, etc.

Dependency: For p0314 = 0, the pole pair number is automatically calculated from the rated frequency (p0310) and the rated speed (p0311) and displayed in r0313.

Notice: If p0314 is changed during quick commissioning (p0010 = 1), the maximum speed p1082, which is also associated with quick commissioning, is pre-assigned accordingly. This is not the case when commissioning the motor (p0010 = 3).

For induction motors, the value need only be input if the rated data of a generator is entered therefore resulting in a negative rated slip. In this case, the number of pole pairs in r0313 is too low by 1 and must be manually corrected.

p0316[0...n] Motor torque constant / Mot kT

SERVO_S110-DP, SERVO_S110-CAN, SERVO_S110-PN

Can be changed: C2(1, 3), U, T	**Calculated:** -	**Access level:** 1
Data type: FloatingPoint32	**Dyn. index:** MDS, p0130	**Func. diagram:** -
P-Group: Motor	**Unit group:** 28_1	**Unit selection:** p0100
Not for motor type: ASM, REL, FEM	**Scaling:** -	**Expert list:** 1
Min	**Max**	**Factory setting**
0.00 [Nm/A]	400.00 [Nm/A]	0.00 [Nm/A]

Description: Sets the torque constant of the synchronous motor.

p0316 = 0: The torque constant is calculated from the motor data.

p0316 > 0: The selected value is used as torque constant.

Dependency: Refer to: r0334, r1937

Caution: When selecting a catalog motor (p0301), this parameter is automatically pre-assigned and is write protected. Information in p0300 should be carefully observed when removing write protection.

Note: This parameter is not used for induction motors (p0300 = 1xx).

p0318[0...n] Motor stall current / Mot I_standstill

SERVO_S110-DP, SERVO_S110-CAN, SERVO_S110-PN

Can be changed: C2(3)	**Calculated:** -	**Access level:** 3
Data type: FloatingPoint32	**Dyn. index:** MDS, p0130	**Func. diagram:** 8017
P-Group: Motor	**Unit group:** -	**Unit selection:** -
Not for motor type: ASM, REL, FEM	**Scaling:** -	**Expert list:** 1
Min	**Max**	**Factory setting**
0.00 [Arms]	10000.00 [Arms]	0.00 [Arms]

Description: Sets the stall current for synchronous motors (p0300 = 2xx).

Caution: When selecting a catalog motor (p0301), this parameter is automatically pre-assigned and is write protected. Information in p0300 should be carefully observed when removing write protection.

Note: The parameter is used for the I2t monitoring of the motor (refer to p0611).

This parameter is not used for induction motors (p0300 = 1xx).

p0319[0...n] Motor stall torque / Mot M_standstill

SERVO_S110-DP, SERVO_S110-CAN, SERVO_S110-PN

Can be changed: C2(3)	**Calculated:** -	**Access level:** 3
Data type: FloatingPoint32	**Dyn. index:** MDS, p0130	**Func. diagram:** -
P-Group: Motor	**Unit group:** 7_4	**Unit selection:** p0100
Not for motor type: ASM, REL, FEM	**Scaling:** -	**Expert list:** 1
Min	**Max**	**Factory setting**
0.00 [Nm]	100000.00 [Nm]	0.00 [Nm]

Description: Sets the standstill (stall) torque for rotating synchronous motors (p0300 = 2xx).

Caution: When selecting a catalog motor (p0301), this parameter is automatically pre-assigned and is write protected. Information in p0300 should be carefully observed when removing write protection.

Note: This parameter is not used for induction motors (p0300 = 1xx).

This parameter value is not evaluated from a control-related perspective.

p0320[0...n] Motor rated magnetizing current/short-circuit current / Mot I_mag_rated

SERVO_S110-DP, SERVO_S110-CAN, SERVO_S110-PN

Can be changed: C2(3), U, T	**Calculated:** -	**Access level:** 3
Data type: FloatingPoint32	**Dyn. index:** MDS, p0130	**Func. diagram:** 5722
P-Group: Motor	**Unit group:** -	**Unit selection:** -
Not for motor type: REL, FEM	**Scaling:** -	**Expert list:** 1
Min	**Max**	**Factory setting**
0.000 [Arms]	5000.000 [Arms]	0.000 [Arms]

Description: Induction motors:
Sets the rated motor magnetizing current.
For p0320 = 0.000 the magnetizing current is internally calculated and displayed in r0331.
Synchronous motors:
Sets the rated motor short-circuit current.

Caution: When selecting a catalog motor (p0301), this parameter is automatically pre-assigned and is write protected. Information in p0300 should be carefully observed when removing write protection.

Note: The magnetization current p0320 for induction motors (not for catalog motors) is reset when quick commissioning is exited with p3900 > 0.

p0322[0...n] Maximum motor speed / Mot n_max

SERVO_S110-DP, SERVO_S110-CAN, SERVO_S110-PN

Can be changed: C2(1, 3)	**Calculated:** -	**Access level:** 1
Data type: FloatingPoint32	**Dyn. index:** MDS, p0130	**Func. diagram:** -
P-Group: Motor	**Unit group:** -	**Unit selection:** -
Not for motor type: -	**Scaling:** -	**Expert list:** 1
Min	**Max**	**Factory setting**
0.0 [rpm]	210000.0 [rpm]	0.0 [rpm]

Description: Sets the maximum motor speed.

Dependency: Refer to: p1082

Caution: When selecting a catalog motor (p0301), this parameter is automatically pre-assigned and is write protected. Information in p0300 should be carefully observed when removing write protection.

Notice: If p0322 is changed during quick commissioning (p0010 = 1), the maximum speed p1082, which is also associated with quick commissioning, is pre-assigned accordingly. This is not the case when commissioning the motor (p0010 = 3).

p0323[0...n] Maximum motor current / Mot I_max

SERVO_S110-DP, SERVO_S110-CAN, SERVO_S110-PN

Can be changed: C2(1, 3)	**Calculated:** -	**Access level:** 1
Data type: FloatingPoint32	**Dyn. index:** MDS, p0130	**Func. diagram:** 5722
P-Group: Motor	**Unit group:** -	**Unit selection:** -
Not for motor type: ASM, FEM	**Scaling:** -	**Expert list:** 1
Min	**Max**	**Factory setting**
0.00 [Arms]	20000.00 [Arms]	0.00 [Arms]

Description: Sets the maximum permissible motor current (e.g. de-magnetizing current for synchronous motors).

Caution: When selecting a catalog motor (p0301), this parameter is automatically pre-assigned and is write protected. Information in p0300 should be carefully observed when removing write protection.

Notice: If p0323 is changed during quick commissioning (p0010 = 1), then the maximum current p0640 is pre-assigned accordingly. This is not the case when commissioning the motor (p0010 = 3).

Note: The parameter has no effect for induction motors.
For synchronous motors, a value must always be entered for the maximum motor current.
p0323 is a motor data. The user-selectable current limit is entered into p0640.

p0324[0...n] Winding maximum speed / Winding n_max

SERVO_S110-DP, SERVO_S110-CAN, SERVO_S110-PN

Can be changed: C2(1, 3)	**Calculated:** -	**Access level:** 1
Data type: FloatingPoint32	**Dyn. index:** MDS, p0130	**Func. diagram:** -
P-Group: Motor	**Unit group:** -	**Unit selection:** -
Not for motor type: -	**Scaling:** -	**Expert list:** 1
Min	**Max**	**Factory setting**
0.0 [rpm]	210000.0 [rpm]	0.0 [rpm]

Description: Sets the electrical maximum speed of the winding.

Dependency: Refer to: p1082

Caution: When selecting a catalog motor (p0301), this parameter is automatically pre-assigned and is write protected. Information in p0300 should be carefully observed when removing write protection.

Notice: If p0324 is changed during quick commissioning (p0010 = 1), then the maximum speed p1082, which is also associated with quick commissioning, is pre-assigned appropriately. This is not the case when commissioning the motor (p0010 = 3).

p0325[0...n] Motor pole position identification current 1st phase / Mot PolID I 1st ph

SERVO_S110-DP, SERVO_S110-CAN, SERVO_S110-PN

Can be changed: U, T	**Calculated:** -	**Access level:** 3
Data type: FloatingPoint32	**Dyn. index:** MDS, p0130	**Func. diagram:** -
P-Group: Motor	**Unit group:** -	**Unit selection:** -
Not for motor type: ASM, REL, FEM	**Scaling:** -	**Expert list:** 1
Min	**Max**	**Factory setting**
0.000 [Arms]	10000.000 [Arms]	0.000 [Arms]

Description: Sets the current for the 1st phase of the two-stage technique for pole position identification routine.
The current of the 2nd phase is set in p0329.
The two-stage technique is selected with p1980 = 4.

Dependency: Refer to: p0329, p1980, p1981, p1982, p1983, r1984, r1985, r1986, r1987, p1990, r1992
Refer to: F07995

Notice: When the motor code (p0301) is changed, it is possible that p0325 is not pre-assigned.
p0325 can be pre-assigned using p0340 = 3.

Note: The value is automatically pre-assigned for the following events:
- For p0325 = 0 and automatic calculation of the closed-loop control parameters (p0340 = 1, 2, 3).
- for quick commissioning (p3900 = 1, 2, 3).

p0326[0...n] Motor stall torque correction factor / Mot M_stall_corr

SERVO_S110-DP, SERVO_S110-CAN, SERVO_S110-PN

Can be changed: C2(3), U, T	**Calculated:** -	**Access level:** 3
Data type: FloatingPoint32	**Dyn. index:** MDS, p0130	**Func. diagram:** -
P-Group: Motor	**Unit group:** -	**Unit selection:** -
Not for motor type: REL, FEM	**Scaling:** -	**Expert list:** 1
Min	**Max**	**Factory setting**
5 [%]	300 [%]	60 [%]

Description: Sets the correction factor for the stall torque/force at a 600 V DC link voltage.

Caution: When selecting a catalog motor (p0301), this parameter is automatically pre-assigned and is write protected. Information in p0300 should be carefully observed when removing write protection.

Note: When quick commissioning is exited with p3900 > 0, then the parameter is reset if a catalog motor has not been selected (refer to p0300).
The reference value for this parameter is inversely proportional to the leakage inductance of the motor (p0353, p0354, p0356).
The following applies for firmware version 2.6 SP2 and higher:
If leakage inductances are changed for motor data identification, the value in p0326 is automatically adapted to maintain the stall torque.

p0327[0...n] Optimum motor load angle / Mot phi_load opt

SERVO_S110-DP, SERVO_S110-CAN, SERVO_S110-PN

Can be changed: C2(3), U, T	**Calculated:** -	**Access level:** 3
Data type: FloatingPoint32	**Dyn. index:** MDS, p0130	**Func. diagram:** 5722
P-Group: Motor	**Unit group:** -	**Unit selection:** -
Not for motor type: ASM, REL, FEM	**Scaling:** -	**Expert list:** 1
Min	**Max**	**Factory setting**
0.0 [°]	135.0 [°]	90.0 [°]

Description: Sets the optimum load angle for synchronous motors with reluctance torque (e.g. 1FE ... motors).
The load angle is measured at 1.5x the rated motor current.

Dependency: Refer to: r1947

Caution: When selecting a catalog motor (p0301), this parameter is automatically pre-assigned and is write protected.
Information in p0300 should be carefully observed when removing write protection.

Note: This parameter has no significance for induction motors.
For synchronous motors without reluctance torque, a angle of 90 degrees must be set.
When quick commissioning is exited with p3900 > 0, then the parameter is reset if a catalog motor has not been selected (refer to p0300).

p0328[0...n] Motor reluctance torque constant / Mot kT_reluctance

SERVO_S110-DP, SERVO_S110-CAN, SERVO_S110-PN

Can be changed: C2(3), U, T	**Calculated:** -	**Access level:** 3
Data type: FloatingPoint32	**Dyn. index:** MDS, p0130	**Func. diagram:** -
P-Group: Motor	**Unit group:** -	**Unit selection:** -
Not for motor type: ASM, REL, FEM	**Scaling:** -	**Expert list:** 1
Min	**Max**	**Factory setting**
-1000.00 [mH]	1000.00 [mH]	0.00 [mH]

Description: Sets the reluctance torque constant for synchronous motors with reluctance torque (e.g. 1FE ... motors).
This parameter has no significance for induction motors.

Dependency: Refer to: r1939

Caution: When selecting a catalog motor (p0301), this parameter is automatically pre-assigned and is write protected.
Information in p0300 should be carefully observed when removing write protection.

Note: For synchronous motors without reluctance torque, the value 0 must be set.

p0329[0...n] Motor pole position identification current / Mot PolID current

SERVO_S110-DP, SERVO_S110-CAN, SERVO_S110-PN

Can be changed: C2(3), U, T	**Calculated:** -	**Access level:** 3
Data type: FloatingPoint32	**Dyn. index:** MDS, p0130	**Func. diagram:** -
P-Group: Motor	**Unit group:** -	**Unit selection:** -
Not for motor type: ASM, REL, FEM	**Scaling:** -	**Expert list:** 1
Min	**Max**	**Factory setting**
0.00 [Arms]	10000.00 [Arms]	0.00 [Arms]

Description: Sets the current for the pole position identification routine.
For a two-stage technique, the current is set for the 2nd phase.

Dependency: Refer to: p0325, p1980, p1981, p1982, p1983, r1984, r1985, r1986, r1987, p1990, r1992
Refer to: F07995

Caution: When selecting a catalog motor (p0301), this parameter is automatically pre-assigned and is write protected.
Information in p0300 should be carefully observed when removing write protection.

r0330[0...n] Rated motor slip / Mot slip_rated

SERVO_S110-DP, SERVO_S110-CAN, SERVO_S110-PN

Can be changed: -	**Calculated:** -	**Access level:** 3
Data type: FloatingPoint32	**Dyn. index:** MDS, p0130	**Func. diagram:** -
P-Group: Motor	**Unit group:** -	**Unit selection:** -
Not for motor type: PMSM, REL, FEM	**Scaling:** -	**Expert list:** 1
Min	**Max**	**Factory setting**
- [Hz]	- [Hz]	- [Hz]

Description: Displays the rated motor slip.

Dependency: The rated slip is calculated from the rated frequency, rated speed and number of pole pairs.
Refer to: p0310, p0311, r0313

Note: The parameter is not used for synchronous motors (p0300 = 2xx).

r0331[0...n] Actual motor magnetizing current/short-circuit current / Mot I_mag_rtd act

SERVO_S110-DP, SERVO_S110-CAN, SERVO_S110-PN

Can be changed: -	**Calculated:** -	**Access level:** 3
Data type: FloatingPoint32	**Dyn. index:** MDS, p0130	**Func. diagram:** 5722, 6722, 6724
P-Group: Motor	**Unit group:** -	**Unit selection:** -
Not for motor type: REL, FEM	**Scaling:** -	**Expert list:** 1
Min	**Max**	**Factory setting**
- [Arms]	- [Arms]	- [Arms]

Description: Induction motor:
Displays the rated magnetizing current from p0320.
For p0320 = 0, the internally calculated magnetizing current is displayed.
Synchronous motor:
Displays the rated short-circuit current from p0320.

Dependency: If p0320 was not entered, then the parameter is calculated from the rating plate parameters.

Note: In the case of multi-motor operation r0331 is increased by the factor p0306 compared to p0320.

r0332[0...n] Rated motor power factor / Mot cos_phi_rated

SERVO_S110-DP, SERVO_S110-CAN, SERVO_S110-PN

Can be changed: -	**Calculated:** -	**Access level:** 3
Data type: FloatingPoint32	**Dyn. index:** MDS, p0130	**Func. diagram:** -
P-Group: Motor	**Unit group:** -	**Unit selection:** -
Not for motor type: PMSM, REL	**Scaling:** -	**Expert list:** 1
Min	**Max**	**Factory setting**
-	-	-

Description: Displays the rated power factor for induction motors.
For IEC motors, the following applies (p0100 = 0):
For p0308 = 0, the internally-calculated power factor is displayed.
For p0308 > 0, this value is displayed.
For NEMA motors, the following applies (p0100 = 1):
For p0309 = 0, the internally-calculated power factor is displayed.
For p0309 > 0, this value is converted into the power factor and displayed.

Dependency: If p0308 is not entered, the parameter is calculated from the rating plate parameters.

Note: The parameter is not used for synchronous motors (p0300 = 2xx).

r0333[0...n] Rated motor torque / Mot M_rated

SERVO_S110-DP, SERVO_S110-CAN, SERVO_S110-PN

Can be changed: -	**Calculated:** -	**Access level:** 3
Data type: FloatingPoint32	**Dyn. index:** MDS, p0130	**Func. diagram:** -
P-Group: Motor	**Unit group:** 7_4	**Unit selection:** p0100
Not for motor type: -	**Scaling:** -	**Expert list:** 1
Min	**Max**	**Factory setting**
- [Nm]	- [Nm]	- [Nm]

Description: Displays the rated motor torque.

Dependency: IEC drives (p0100 = 0): unit Nm
NEMA drives (p0100 = 1): unit lbf ft

Note: For induction and reluctance motors, r0333 is calculated from p0307 and p0311.
For synchronous motors, r0333 is calculated from p0305, p0316, p0327 and p0328. The result can deviate from the input in p0312. If p0316 = 0, then r0333 = p0312 is displayed.
In the case of multi-motor operation r0333 is increased by the factor p0306 compared to the rated torque of an individual motor.

r0334[0...n] Actual motor-torque constant / Mot kT act

SERVO_S110-DP, SERVO_S110-CAN, SERVO_S110-PN

Can be changed: -	**Calculated:** -	**Access level:** 3
Data type: FloatingPoint32	**Dyn. index:** MDS, p0130	**Func. diagram:** -
P-Group: Motor	**Unit group:** 28_1	**Unit selection:** p0100
Not for motor type: ASM, REL, FEM	**Scaling:** -	**Expert list:** 1
Min	**Max**	**Factory setting**
- [Nm/A]	- [Nm/A]	- [Nm/A]

Description: Displays the torque constant of the synchronous motor used.

Dependency: IEC drives (p0100 = 0): unit Nm / A

NEMA drives (p0100 = 1): unit lbf ft / A

Refer to: p0316

Note: This parameter is not used for induction motors (p0300 = 1xx).

For synchronous motors, parameter r0334 = p0316 is displayed. if p0316 = 0, r0334 is calculated from p0305 and p0312.

p0335[0...n] Motor cooling type / Motor cooling type

SERVO_S110-DP, SERVO_S110-CAN, SERVO_S110-PN

Can be changed: C2(1, 3), T	**Calculated:** -	**Access level:** 1
Data type: Integer16	**Dyn. index:** MDS, p0130	**Func. diagram:** -
P-Group: Motor	**Unit group:** -	**Unit selection:** -
Not for motor type: PMSM, REL, FEM	**Scaling:** -	**Expert list:** 1
Min	**Max**	**Factory setting**
0	128	0

Description: Sets the motor cooling system used.

Value:
0: Non-ventilated
1: Forced cooling
2: Liquid cooling
4: Non-ventilated and internal fan
5: Forced cooling and internal fan
6: Liquid cooling and internal fan
128: No fan

Dependency: For 1LA5 and 1LA7 motors (refer to p0300), the parameter is pre-set as a function of p0307 and p0311.

Caution: When selecting a catalog motor (p0301), this parameter is automatically pre-assigned and is write protected. Information in p0300 should be carefully observed when removing write protection.

Note: The parameter influences the thermal 3-mass motor model.

1LA1 and 1LA8 motors are characterized by the fact that they have an internal rotor fan. This "internal cooling" lies within the motor frame and is not visible. Air is not directly exchanged with the motor ambient air. For 1PQ8 motors, p0335 should be set to 5 as these motors are force-ventilated motors.

1LA7 motors, frame size 56 are operated without fan.

r0336[0...n] Actual rated motor frequency / Mot f_rated act

SERVO_S110-DP, SERVO_S110-CAN, SERVO_S110-PN

Can be changed: -	**Calculated:** -	**Access level:** 3
Data type: FloatingPoint32	**Dyn. index:** MDS, p0130	**Func. diagram:** -
P-Group: Motor	**Unit group:** -	**Unit selection:** -
Not for motor type: -	**Scaling:** -	**Expert list:** 1
Min	**Max**	**Factory setting**
- [Hz]	- [Hz]	- [Hz]

Description: Displays the rated frequency of the motor.

For p0310 > 0, this value is displayed.

Dependency: Refer to: p0311, p0314

Note: For p0310 = 0 or for synchronous motors, the rated motor frequency r0336 is calculated from the rated speed and the pole pair number.

For p0310 > 0, this value is displayed (not for synchronous motors).

r0337[0...n] Rated motor EMF / Mot EMF_rated

SERVO_S110-DP, SERVO_S110-CAN, SERVO_S110-PN

Can be changed: -	**Calculated:** -	**Access level:** 3
Data type: FloatingPoint32	**Dyn. index:** MDS, p0130	**Func. diagram:** -
P-Group: Motor	**Unit group:** -	**Unit selection:** -
Not for motor type: REL	**Scaling:** -	**Expert list:** 1
Min	**Max**	**Factory setting**
- [Vrms]	- [Vrms]	- [Vrms]

Description: Displays the rated EMF of the motor.

Note: EMF: Electromagnetic force

p0338[0...n] Motor limit current / Mot I_limit

SERVO_S110-DP, SERVO_S110-CAN, SERVO_S110-PN

Can be changed: C2(1, 3)	**Calculated:** -	**Access level:** 2
Data type: FloatingPoint32	**Dyn. index:** MDS, p0130	**Func. diagram:** -
P-Group: Motor	**Unit group:** -	**Unit selection:** -
Not for motor type: ASM, REL, FEM	**Scaling:** -	**Expert list:** 1
Min	**Max**	**Factory setting**
0.00 [Arms]	10000.00 [Arms]	0.00 [Arms]

Description: Sets the motor limit current for synchronous motors (for a 600 V DC link voltage).

Using this current, the maximum torque is achieved at the rated speed (voltage limit characteristic).

Caution: When selecting a catalog motor (p0301), this parameter is automatically pre-assigned and is write protected. Information in p0300 should be carefully observed when removing write protection.

Notice: If p0338 is changed during quick commissioning (p0010 = 1), then the maximum current p0640 is appropriately pre-assigned. This is not the case when commissioning the motor (p0010 = 3).

r0339[0...n] Rated motor voltage / Mot U_rated

SERVO_S110-DP, SERVO_S110-CAN, SERVO_S110-PN

Can be changed: -	**Calculated:** -	**Access level:** 3
Data type: FloatingPoint32	**Dyn. index:** MDS, p0130	**Func. diagram:** -
P-Group: Motor	**Unit group:** -	**Unit selection:** -
Not for motor type: REL	**Scaling:** -	**Expert list:** 1
Min	**Max**	**Factory setting**
- [Vrms]	- [Vrms]	- [Vrms]

Description: Displays the rated motor voltage.

Note: For induction motors (p0300 = 1xx) the parameter is set to p0304.

For synchronous motors, parameter r0339 = p0304 is displayed. If p0304 = 0, then r0339 is calculated from p0305 and p0316.

p0340[0...n] Automatic calculation motor/control parameters / Calc auto par

SERVO_S110-DP, SERVO_S110-CAN, SERVO_S110-PN

Can be changed: C2(3), T	**Calculated:** -	**Access level:** 2
Data type: Integer16	**Dyn. index:** DDS, p0180	**Func. diagram:** -
P-Group: Motor	**Unit group:** -	**Unit selection:** -
Not for motor type: -	**Scaling:** -	**Expert list:** 1
Min	**Max**	**Factory setting**
0	5	0

Description: Setting to automatically calculate motor parameters and U/f open-loop and closed-loop control parameters from the rating plate data.

Value:
0: No calculation
1: Complete calculation
2: Calculation of equivalent circuit diagram parameters
3: Calculation of closed-loop control parameters
4: Calculation of controller parameters
5: Calculation of technological limits and threshold values

Notice: It is not possible to modify parameters after changing the value.
The following parameters are influenced using p0340:
The parameters designated with (*) are not overwritten for catalog motors (p0300 > 100).
p0340 = 1:
--> All of the parameters influenced for p0340 = 2, 3, 4, 5
--> p0341 (*)
--> p0342, p0344, p0600, p0640, p1082, p2000, p2001, p2002, p2003, p2005, p2007
p0340 = 2:
--> p0350 (*), p0354 (*), p0356 (*), p0358 (*), p0360 (*)
--> p0625 (matching p0350)
p0340 = 3:
--> All of the parameters influenced for p0340 = 4, 5
--> p0325 (is only calculated for p0325 = 0)
--> p0348 (*) (is only calculated for p0348 = 0)
--> p0441, p0442, p0443, p0444, p0445 (only for 1FT6, 1FK6, 1FK7 motors)
--> p0492, p1082, p1980, p1319, p1326, p1327, p1612, p1752, p1755
p0340 = 4:
--> p1441, p1460, p1462, p1463, p1464, p1465, p1470, p1472, p1590, p1592, p1596, p1656, p1657, p1658, p1659, p1715, p1717
--> p1461 (for p0348 > p0322, p1461 is set to 100 %)
--> p1463 (for p0348 > p0322, p1463 is set to 400 %)
p0340 = 5:
--> p1037, p1038, p1520, p1521, p1530, p1531, p2140 ... p2142, p2148, p2150, p2155, p2161, p2162, p2163, p2164, p2175, p2177, p2194, p3820 ... p3829

Note: p0340 = 1 contains the calculations of p0340 = 2, 3, 4, 5 without overwriting the motor parameters from the Siemens motor lists (p0301 > 0).
p0340 = 2 calculates the motor parameters (p0350 ... p0360), but only if it does involve a Siemens catalog motor (p0301 = 0).
p0340 = 3 contains the calculations of p0340 = 4, 5.
p0340 = 4 only calculates the controller parameters.
p0340 = 5 only calculates the controller limits.
When quick commissioning is exited using p3900 > 0, p0340 is automatically set to 1.
At the end of the calculations, p0340 is automatically set to 0.
If the STARTER commissioning software writes a 3 into p0340 when "downloading to target device", then this corresponds to a "complete calculation of the motor/control parameters without equivalent circuit diagram data". The same calculations are carried out as for p0340 = 1, however, without the equivalent circuit diagram parameters of the motor (p0340 = 2), the motor moment of inertia (p0341) and the motor weight (p0344).

p0341[0...n] Motor moment of inertia / Mot M_mom of inert

SERVO_S110-DP, SERVO_S110-CAN, SERVO_S110-PN

Can be changed: C2(3), U, T	**Calculated:** CALC_MOD_ALL	**Access level:** 3
Data type: FloatingPoint32	**Dyn. index:** MDS, p0130	**Func. diagram:** 5042, 5210
P-Group: Motor	**Unit group:** 25_1	**Unit selection:** p0100
Not for motor type: REL	**Scaling:** -	**Expert list:** 1
Min	**Max**	**Factory setting**
0.000000 [kgm²]	100000.000000 [kgm²]	0.000000 [kgm²]

Description: Sets the motor moment of inertia (without load).

Dependency: IEC drives (p0100 = 0): unit kg m^2
NEMA drives (p0100 = 1): unit lb ft^2
The parameter value is included, together with p0342, in the rated starting time of the motor.
Refer to: p0342

Caution: When selecting a catalog motor (p0301), this parameter is automatically pre-assigned and is write protected. Information in p0300 should be carefully observed when removing write protection.

Note: p0341 * p0342 + p1498 influence the speed/torque pre-control in encoderless operation.

p0342[0...n] Ratio between the total and motor moment of inertia / Mot MomInert Ratio

SERVO_S110-DP, SERVO_S110-CAN, SERVO_S110-PN

Can be changed: C2(3), U, T	**Calculated:** CALC_MOD_ALL	**Access level:** 3
Data type: FloatingPoint32	**Dyn. index:** MDS, p0130	**Func. diagram:** 5042, 5210
P-Group: Motor	**Unit group:** -	**Unit selection:** -
Not for motor type: REL	**Scaling:** -	**Expert list:** 1
Min	**Max**	**Factory setting**
1.000	10000.000	1.000

Description: Sets the ratio between the total moment of inertia/mass (load + motor) and the intrinsic motor moment of inertia/mass (no load).

Dependency: Refer to: p0341, p1498

Note: p0341 * p0342 + p1498 influence the speed/torque pre-control in encoderless operation.

p0344[0...n] Motor weight (for the thermal motor model) / Mot weight th mod

SERVO_S110-DP, SERVO_S110-CAN, SERVO_S110-PN

Can be changed: C2(3), T	**Calculated:** CALC_MOD_ALL	**Access level:** 3
Data type: FloatingPoint32	**Dyn. index:** MDS, p0130	**Func. diagram:** -
P-Group: Motor	**Unit group:** 27_1	**Unit selection:** p0100
Not for motor type: PMSM, REL, FEM	**Scaling:** -	**Expert list:** 1
Min	**Max**	**Factory setting**
0.0 [kg]	50000.0 [kg]	0.0 [kg]

Description: Sets the motor weight.

Dependency: IEC drives (p0100 = 0): unit kg
NEMA drives (p0100 = 1): unit lb

Caution: When selecting a catalog motor (p0301), this parameter is automatically pre-assigned and is write protected. Information in p0300 should be carefully observed when removing write protection.

Note: The parameter influences the thermal 3 mass model of the induction motor.
The parameter is not used for synchronous motors (p0300 = 2xx).

p0347[0...n] Motor de-excitation time / Mot t_de-excitat

SERVO_S110-DP, SERVO_S110-CAN, SERVO_S110-PN

Can be changed: C2(3), U, T	**Calculated:** CALC_MOD_REG	**Access level:** 3
Data type: FloatingPoint32	**Dyn. index:** MDS, p0130	**Func. diagram:** -
P-Group: Motor	**Unit group:** -	**Unit selection:** -
Not for motor type: -	**Scaling:** -	**Expert list:** 1
Min	**Max**	**Factory setting**
0.000 [s]	20.000 [s]	0.000 [s]

Description: Sets the de-magnetizing time (for induction motors) after the inverter pulses have been canceled.
The inverter pulses cannot be switched in (enabled) within this delay time.
For SERVO, the de-excitation time is only used for DC current braking.

Note: The parameter is calculated using p0340 = 1, 3.
For induction motors, the result depends on the rotor time constant (r0384).
if this time is shortened too much, then this can result in an inadequate de-magnetizing of the induction motor and in an overcurrent condition when the pulses are subsequently enabled (only when the flying restart function is activated and the motor is rotating).

p0348[0...n] Speed at the start of field weakening Vdc = 600 V / Mot n_field weaken

SERVO_S110-DP, SERVO_S110-CAN, SERVO_S110-PN

Can be changed: C2(3), U, T	**Calculated:** CALC_MOD_REG	**Access level:** 3
Data type: FloatingPoint32	**Dyn. index:** MDS, p0130	**Func. diagram:** 5722
P-Group: Motor	**Unit group:** -	**Unit selection:** -
Not for motor type: -	**Scaling:** -	**Expert list:** 1
Min	**Max**	**Factory setting**
0.0 [rpm]	210000.0 [rpm]	0.0 [rpm]

Description: Sets the speed at the start of field weakening for a DC link voltage of 600 V.

Dependency: Refer to: p0320, r0331

Caution: When selecting a catalog motor (p0301), this parameter is automatically pre-assigned and is write protected. Information in p0300 should be carefully observed when removing write protection.

p0349 System of units motor equivalent circuit diagram data / Unit_sys mot ESB

SERVO_S110-DP, SERVO_S110-CAN, SERVO_S110-PN

Can be changed: C2(3)	**Calculated:** -	**Access level:** 1
Data type: Integer16	**Dyn. index:** -	**Func. diagram:** -
P-Group: Motor	**Unit group:** -	**Unit selection:** -
Not for motor type: -	**Scaling:** -	**Expert list:** 1
Min	**Max**	**Factory setting**
1	1	1

Description: Sets the actual system of units for motor equivalent circuit diagram data.

Value: 1: System of units, physical

Dependency: Refer to: p0304, p0305, p0310

Note: The reference parameter for resistances of the rated motor impedance Z = p0304 / (1.732 * p0305) is in the % units system.

Inductances are converted into a resistance using the factor 2 * Pi * p0310.

If a reference parameter (p0304, p305, p0310) is zero, then it is not possible to make a changeover to "referred" values (per unit values).

p0350[0...n] Motor stator resistance cold / Mot R_stator cold

SERVO_S110-DP, SERVO_S110-CAN, SERVO_S110-PN

Can be changed: C2(3), U, T	**Calculated:** CALC_MOD_EQU	**Access level:** 2
Data type: FloatingPoint32	**Dyn. index:** MDS, p0130	**Func. diagram:** -
P-Group: Motor	**Unit group:** 16_1	**Unit selection:** p0349
Not for motor type: -	**Scaling:** -	**Expert list:** 1
Min	**Max**	**Factory setting**
0.00000 [ohm]	2000.00000 [ohm]	0.00000 [ohm]

Description: Sets the stator resistance of the motor at ambient temperature p0625.

Dependency: Refer to: p0625, r1912

Caution: When selecting a catalog motor (p0301), this parameter is automatically pre-assigned and is write protected. Information in p0300 should be carefully observed when removing write protection.

Note: The motor identification routine determines the stator resistance from the total stator resistance minus the cable resistance (p0352).

p0352[0...n] Cable resistance / Mot R_cable cold

SERVO_S110-DP, SERVO_S110-CAN, SERVO_S110-PN

Can be changed: C2(3), U, T	**Calculated:** -	**Access level:** 3
Data type: FloatingPoint32	**Dyn. index:** MDS, p0130	**Func. diagram:** -
P-Group: Motor	**Unit group:** 16_1	**Unit selection:** p0349
Not for motor type: -	**Scaling:** -	**Expert list:** 1
Min	**Max**	**Factory setting**
0.00000 [ohm]	120.00000 [ohm]	0.00000 [ohm]

Description: Resistance of the power cable between the Motor Module and motor.

Caution:

The cable resistance should be entered prior to motor data identification. If it is used subsequently, the difference by which p0352 was changed must be subtracted from the stator resistance p0350 or motor data identification must be repeated.

Note: The parameter influences the temperature adaptation of the stator resistance.

The motor identification routine does not change the cable resistance. This is subtracted from the total measured stator resistance in order to calculate the stator resistance (p0350, p0352).

The cable resistance is reset when quick commissioning is exited with p3900 > 0.

p0353[0...n] Motor series inductance / Mot L_series

SERVO_S110-DP, SERVO_S110-CAN, SERVO_S110-PN

Can be changed: C2(3), U, T	**Calculated:** -	**Access level:** 2
Data type: FloatingPoint32	**Dyn. index:** MDS, p0130	**Func. diagram:** -
P-Group: Motor	**Unit group:** 15_1	**Unit selection:** p0349
Not for motor type: -	**Scaling:** -	**Expert list:** 1
Min	**Max**	**Factory setting**
0.000 [mH]	1000000.000 [mH]	0.000 [mH]

Description: Sets the series inductance.

Note: For the automatic calculation with p0340 = 1 or 3, the calculation of p0348 is influenced by p0353 if p0348 was 0.
For the automatic calculation with p0340 = 1, 3 or 4, the calculation of p1715 is influenced by p0353.
The series inductance is reset when quick commissioning is exited with p3900 > 0.
The reference value for p0326 is inversely proportional to the leakage inductance of the motor (p0353, p0354, p0356).

p0354[0...n] Motor rotor resistance cold / damping resistance d axis / Mot R_r cold/R_D d

SERVO_S110-DP, SERVO_S110-CAN, SERVO_S110-PN

Can be changed: C2(3), U, T	**Calculated:** CALC_MOD_EQU	**Access level:** 3
Data type: FloatingPoint32	**Dyn. index:** MDS, p0130	**Func. diagram:** -
P-Group: Motor	**Unit group:** 16_1	**Unit selection:** p0349
Not for motor type: PMSM, REL	**Scaling:** -	**Expert list:** 1
Min	**Max**	**Factory setting**
0.00000 [ohm]	300.00000 [ohm]	0.00000 [ohm]

Description: Sets the rotor/secondary section resistance of the motor at the ambient temperature p0625.
For separately-excited synchronous motors: Sets the damping resistance in the rotor direction (d-axis).
This parameter value is automatically calculated using the motor model (p0340 = 1, 2) or using the motor data identification routine (p1910) (not for separately-excited synchronous motors).

Dependency: Refer to: p0625

Caution: When selecting a catalog motor (p0301), this parameter is automatically pre-assigned and is write protected. Information in p0300 should be carefully observed when removing write protection.

Note: The parameter is not used for synchronous motors (p0300 = 2xx).
The reference value for p0326 is inversely proportional to the leakage inductance of the motor (p0353, p0354, p0356).

p0356[0...n] Motor stator leakage inductance / Mot L_stator leak.

SERVO_S110-DP, SERVO_S110-CAN, SERVO_S110-PN

Can be changed: C2(3), U, T	**Calculated:** CALC_MOD_EQU	**Access level:** 3
Data type: FloatingPoint32	**Dyn. index:** MDS, p0130	**Func. diagram:** -
P-Group: Motor	**Unit group:** 15_1	**Unit selection:** p0349
Not for motor type: -	**Scaling:** -	**Expert list:** 1
Min	**Max**	**Factory setting**
0.00000 [mH]	1000.00000 [mH]	0.00000 [mH]

Description: Induction motor, separately-excited synchronous motor: Sets the rotor leakage inductance of the motor.
Synchronous motor: Sets the stator quadrature axis inductance of the motor.
This parameter value is automatically calculated using the motor model (p0340 = 1, 2) or using the motor identification routine (p1910).

Caution: When selecting a catalog motor (p0301), this parameter is automatically pre-assigned and is write protected. Information in p0300 should be carefully observed when removing write protection.

Note: The reference value for p0326 is inversely proportional to the leakage inductance of the motor (p0353, p0354, p0356).

p0358[0...n] Motor rotor leakage inductance / damping inductance d axis / Mot L_r leak / LDd

SERVO_S110-DP, SERVO_S110-CAN, SERVO_S110-PN

Can be changed: C2(3), U, T	**Calculated:** CALC_MOD_EQU	**Access level:** 3
Data type: FloatingPoint32	**Dyn. index:** MDS, p0130	**Func. diagram:** -
P-Group: Motor	**Unit group:** 15_1	**Unit selection:** p0349
Not for motor type: PMSM, REL	**Scaling:** -	**Expert list:** 1
Min	**Max**	**Factory setting**
0.00000 [mH]	1000.00000 [mH]	0.00000 [mH]

Description: Sets the rotor/secondary section leakage inductance of the motor.
For separately-excited synchronous motors: Sets the damping inductance in the rotor direction (d-axis).
This value is automatically calculated using the motor model (p0340 = 1, 2) or using the motor identification routine (p1910) (not for separately-excited synchronous motors).

Caution: When selecting a catalog motor (p0301), this parameter is automatically pre-assigned and is write protected. Information in p0300 should be carefully observed when removing write protection.

Note: The parameter is not used for synchronous motors (p0300 = 2xx).

p0360[0...n] Motor magnetizing inductance/magn. inductance d axis saturated / Mot Lh/Lh d sat

SERVO_S110-DP, SERVO_S110-CAN, SERVO_S110-PN

Can be changed: C2(3), U, T	**Calculated:** CALC_MOD_EQU	**Access level:** 3
Data type: FloatingPoint32	**Dyn. index:** MDS, p0130	**Func. diagram:** -
P-Group: Motor	**Unit group:** 15_1	**Unit selection:** p0349
Not for motor type: PMSM, REL	**Scaling:** -	**Expert list:** 1
Min	**Max**	**Factory setting**
0.00000 [mH]	10000.00000 [mH]	0.00000 [mH]

Description: Sets the magnetizing inductance of the motor.
For separately-excited synchronous motors: Sets the saturated magnetizing inductance in the rotor direction (d-axis).
This parameter value is automatically calculated using the motor model (p0340 = 1, 2) or using the motor identification routine (p1910) (not for separately-excited synchronous motors).

Caution: When selecting a catalog motor (p0301), this parameter is automatically pre-assigned and is write protected. Information in p0300 should be carefully observed when removing write protection.

Note: The parameter is not used for synchronous motors (p0300 = 2xx).

r0370[0...n] Motor stator resistance cold / Mot R_stator cold

SERVO_S110-DP, SERVO_S110-CAN, SERVO_S110-PN

Can be changed: -	**Calculated:** -	**Access level:** 4
Data type: FloatingPoint32	**Dyn. index:** MDS, p0130	**Func. diagram:** -
P-Group: Motor	**Unit group:** 16_1	**Unit selection:** p0349
Not for motor type: -	**Scaling:** -	**Expert list:** 1
Min	**Max**	**Factory setting**
- [ohm]	- [ohm]	- [ohm]

Description: Displays the motor stator resistance at an ambient temperature (p0625).
The value does not include the cable resistance.

Dependency: Refer to: p0625

r0373[0...n] Motor rated stator resistance / Mot R_stator rated

SERVO_S110-DP, SERVO_S110-CAN, SERVO_S110-PN

Can be changed: -	**Calculated:** -	**Access level:** 4
Data type: FloatingPoint32	**Dyn. index:** MDS, p0130	**Func. diagram:** -
P-Group: Motor	**Unit group:** 16_1	**Unit selection:** p0349
Not for motor type: PMSM, REL, FEM	**Scaling:** -	**Expert list:** 1
Min	**Max**	**Factory setting**
- [ohm]	- [ohm]	- [ohm]

Description: Displays the rated motor stator resistance at rated temperature (total of p0625 and p0627).

Dependency: Refer to: p0627

Note: The parameter is not used for synchronous motors (p0300 = 2xx).

r0374[0...n] Motor rotor resistance cold / damping resistance d axis / Mot R_r cold / RDd

SERVO_S110-DP, SERVO_S110-CAN, SERVO_S110-PN

Can be changed: -	**Calculated:** -	**Access level:** 4
Data type: FloatingPoint32	**Dyn. index:** MDS, p0130	**Func. diagram:** -
P-Group: Motor	**Unit group:** 16_1	**Unit selection:** p0349
Not for motor type: PMSM, REL	**Scaling:** -	**Expert list:** 1
Min	**Max**	**Factory setting**
- [ohm]	- [ohm]	- [ohm]

Description: Displays the rotor/secondary section resistance of the motor for the ambient temperature p0625.
For separately-excited synchronous motors: Displays the damping resistance in the rotor direction (d-axis).

Dependency: Refer to: p0625

Note: The parameter is not used for synchronous motors (p0300 = 2xx).

r0376[0...n] Rated motor rotor resistance / Mot R_rotor rated

SERVO_S110-DP, SERVO_S110-CAN, SERVO_S110-PN

Can be changed: -	**Calculated:** -	**Access level:** 4
Data type: FloatingPoint32	**Dyn. index:** MDS, p0130	**Func. diagram:** -
P-Group: Motor	**Unit group:** 16_1	**Unit selection:** p0349
Not for motor type: PMSM, REL, FEM	**Scaling:** -	**Expert list:** 1
Min	**Max**	**Factory setting**
- [ohm]	- [ohm]	- [ohm]

Description: Displays the rated (nominal) rotor/secondary section resistance of the motor at the rated temperature (total of p0625 and p0628).

Dependency: Refer to: p0628

Note: The parameter is not used for synchronous motors (p0300 = 2xx).

r0377[0...n] Motor leakage inductance total / Mot L_leak total

SERVO_S110-DP, SERVO_S110-CAN, SERVO_S110-PN

Can be changed: -	**Calculated:** -	**Access level:** 4
Data type: FloatingPoint32	**Dyn. index:** MDS, p0130	**Func. diagram:** 6640
P-Group: Motor	**Unit group:** 15_1	**Unit selection:** p0349
Not for motor type: -	**Scaling:** -	**Expert list:** 1
Min	**Max**	**Factory setting**
- [mH]	- [mH]	- [mH]

Description: Induction motor:
Displays the stator leakage inductance of the motor including the series inductance (p0353).
Synchronous motor:
Displays the stator quadrature axis inductance of the motor including the series inductance (p0353).

r0382[0...n] Motor magnetizing inductance transformed / Lh d axis saturated / Mot L_m tr/Lhd sat

SERVO_S110-DP, SERVO_S110-CAN, SERVO_S110-PN

Can be changed: -	**Calculated:** -	**Access level:** 4
Data type: FloatingPoint32	**Dyn. index:** MDS, p0130	**Func. diagram:** -
P-Group: Motor	**Unit group:** 15_1	**Unit selection:** p0349
Not for motor type: PMSM, REL	**Scaling:** -	**Expert list:** 1
Min	**Max**	**Factory setting**
- [mH]	- [mH]	- [mH]

Description: Displays the magnetizing inductance of the motor.
For separately-excited synchronous motors: Displays the saturated magnetizing inductance in the rotor direction (d-axis).

Note: The parameter is not used for synchronous motors (p0300 = 2xx).

r0384[0...n] Motor rotor time constant / damping time constant d axis / Mot T_rotor/T_Dd

SERVO_S110-DP, SERVO_S110-CAN, SERVO_S110-PN

Can be changed: -	**Calculated:** -	**Access level:** 4
Data type: FloatingPoint32	**Dyn. index:** MDS, p0130	**Func. diagram:** 6722
P-Group: Motor	**Unit group:** -	**Unit selection:** -
Not for motor type: PMSM, REL	**Scaling:** -	**Expert list:** 1
Min	**Max**	**Factory setting**
- [ms]	- [ms]	- [ms]

Description: Displays the rotor time constant.
For separately-excited synchronous motors: Displays the damping time constant in the rotor direction (d-axis).

Note: The parameter is not used for synchronous motors.
The value is calculated from the total of the inductances on the rotor side (p0358, p0360) divided by the rotor/damping resistance (p0354). The temperature adaptation of the rotor resistance for induction motors is not taken into account.

r0386[0...n] Motor stator leakage time constant / Mot T_stator leak

SERVO_S110-DP, SERVO_S110-CAN, SERVO_S110-PN

Can be changed: -	**Calculated:** -	**Access level:** 4
Data type: FloatingPoint32	**Dyn. index:** MDS, p0130	**Func. diagram:** -
P-Group: Motor	**Unit group:** -	**Unit selection:** -
Not for motor type: -	**Scaling:** -	**Expert list:** 1
Min	**Max**	**Factory setting**
- [ms]	- [ms]	- [ms]

Description: Displays the stator leakage time constant.

Note: The value is calculated from the total of all leakage inductances (p0353, p0356, p0358) divided by the total of all motor resistances (p0350, p0352, p0354). The temperature adaptation of the resistances is not taken into account.

p0391[0...n] Current controller adaptation starting point KP / I_adapt pt KP

SERVO_S110-DP, SERVO_S110-CAN, SERVO_S110-PN

Can be changed: C2(3), U, T	**Calculated:** -	**Access level:** 3
Data type: FloatingPoint32	**Dyn. index:** MDS, p0130	**Func. diagram:** 5714
P-Group: Motor	**Unit group:** -	**Unit selection:** -
Not for motor type: REL	**Scaling:** -	**Expert list:** 1
Min	**Max**	**Factory setting**
0.00 [Arms]	6000.00 [Arms]	0.00 [Arms]

Description: Sets the starting point of the current-dependent current controller adaptation where the current controller gain p1715 is effective.

Dependency: Refer to: p0392, p0393, p1402, p1715

Caution: When selecting a catalog motor (p0301), this parameter is automatically pre-assigned and is write protected. Information in p0300 should be carefully observed when removing write protection.

Note: For p0393 = 100 % or p1402.2 = 0, the current controller adaptation is disabled and p1715 is effective over the entire range.

p0392[0...n] Current controller adaptation starting point KP adapted / I_adapt pt KP adap

SERVO_S110-DP, SERVO_S110-CAN, SERVO_S110-PN

Can be changed: C2(3), U, T	**Calculated:** -	**Access level:** 3
Data type: FloatingPoint32	**Dyn. index:** MDS, p0130	**Func. diagram:** 5714
P-Group: Motor	**Unit group:** -	**Unit selection:** -
Not for motor type: REL	**Scaling:** -	**Expert list:** 1
Min	**Max**	**Factory setting**
0.00 [Arms]	6000.00 [Arms]	0.00 [Arms]

Description: Sets the starting point of the current-dependent current controller adaptation where the adapted current controller gain p1715 x p0393 is effective.

Dependency: Refer to: p0391, p0393, p1402, p1715

Caution: When selecting a catalog motor (p0301), this parameter is automatically pre-assigned and is write protected. Information in p0300 should be carefully observed when removing write protection.

Note: For p0393 = 100 % or p1402.2 = 0, the current controller adaptation is disabled and p1715 is effective over the entire range.

p0393[0...n] Current controller adaptation p gain adaptation / I_adapt Kp adapt

SERVO_S110-DP, SERVO_S110-CAN, SERVO_S110-PN

Can be changed: C2(3), U, T	**Calculated:** -	**Access level:** 3
Data type: FloatingPoint32	**Dyn. index:** MDS, p0130	**Func. diagram:** 5714
P-Group: Motor	**Unit group:** -	**Unit selection:** -
Not for motor type: REL	**Scaling:** -	**Expert list:** 1
Min	**Max**	**Factory setting**
0.00 [%]	1000.00 [%]	100.00 [%]

Description: Sets the factor for the current controller P gain in the adaptation range (current > p0392).
The value is referred to p1715.

Dependency: Refer to: p0391, p0392, p1402, p1715

Caution: When selecting a catalog motor (p0301), this parameter is automatically pre-assigned and is write protected. Information in p0300 should be carefully observed when removing write protection.

Note: For p0393 = 100 % or p1402.2 = 0, the current controller adaptation is disabled and p1715 is effective over the entire range.

r0395[0...n] Actual stator resistance / R_stator act

SERVO_S110-DP, SERVO_S110-CAN, SERVO_S110-PN

Can be changed: -	**Calculated:** -	**Access level:** 3
Data type: FloatingPoint32	**Dyn. index:** MDS, p0130	**Func. diagram:** 6300, 6730, 6731, 6732
P-Group: Motor	**Unit group:** 16_1	**Unit selection:** p0349
Not for motor type: -	**Scaling:** -	**Expert list:** 1
Min	**Max**	**Factory setting**
- [ohm]	- [ohm]	- [ohm]

Description: Displays the actual stator resistance (phase value).
The parameter value also contains the temperature-independent cable resistance.

Dependency: In the case of induction motors the parameter is also affected by the motor temperature model.
Refer to: p0350, p0352, p0620

Note: In each case, only the stator resistance of the active Motor Data Set is included with the stator temperature of the thermal motor model.

r0396[0...n] Actual rotor resistance / R_rotor act

SERVO_S110-DP, SERVO_S110-CAN, SERVO_S110-PN

Can be changed: -	**Calculated:** -	**Access level:** 3
Data type: FloatingPoint32	**Dyn. index:** MDS, p0130	**Func. diagram:** 6730
P-Group: Motor	**Unit group:** 16_1	**Unit selection:** p0349
Not for motor type: PMSM, REL, FEM	**Scaling:** -	**Expert list:** 1
Min	**Max**	**Factory setting**
- [ohm]	- [ohm]	- [ohm]

Description: Displays the actual rotor/secondary section resistance (phase value).
The parameter is affected by the motor temperature model.

Dependency: Refer to: p0354, p0620

Note: In each case, only the rotor resistance of the active Motor Data Set is included with the rotor temperature of the thermal motor model.
This parameter is not used for synchronous motors (p0300 = 2xx).

p0400[0...n] Encoder type selection / Enc_typ sel

SERVO_S110-DP, SERVO_S110-CAN, SERVO_S110-PN

Can be changed: C2(1, 4)	**Calculated:** -	**Access level:** 1
Data type: Integer16	**Dyn. index:** EDS, p0140	**Func. diagram:** 1580, 4704
P-Group: Encoder	**Unit group:** -	**Unit selection:** -
Not for motor type: -	**Scaling:** -	**Expert list:** 1
Min	**Max**	**Factory setting**
0	10100	0

Description: Selects the encoder from the list of encoder types supported.

Value:

0: No encoder
202: DRIVE-CLiQ encoder AS20, singleturn
204: DRIVE-CLiQ encoder AM20, multiturn 4096
242: DRIVE-CLiQ encoder AS24, singleturn
244: DRIVE-CLiQ encoder AM24, multiturn 4096
1001: Resolver 1 speed
1002: Resolver 2 speed
1003: Resolver 3 speed
1004: Resolver 4 speed
2001: 2048, 1 Vpp, A/B C/D R
2002: 2048, 1 Vpp, A/B R
2003: 256, 1 Vpp, A/B R
2004: 400, 1 Vpp, A/B R
2005: 512, 1 Vpp, A/B R
2006: 192, 1 Vpp, A/B R
2007: 480, 1 Vpp, A/B R
2008: 800, 1 Vpp, A/B R
2010: 18000, 1 Vpp, A/B R distance-coded
2051: 2048, 1 Vpp, A/B, EnDat, Multiturn 4096
2052: 32, 1 Vpp, A/B, EnDat, Multiturn 4096
2053: 512, 1 Vpp, A/B, EnDat, Multiturn 4096
2054: 16, 1 Vpp, A/B, EnDat, Multiturn 4096
2055: 2048, 1 Vpp, A/B, EnDat, Singleturn
2081: 2048, 1 Vpp, A/B, SSI, Singleturn
2082: 2048, 1 Vpp, A/B, SSI, Multiturn 4096
2083: 2048, 1 Vpp, A/B, SSI, singleturn, error bit
2084: 2048, 1 Vpp, A/B, SSI, multiturn 4096, error bit
3001: 1024 HTL A/B R
3002: 1024 TTL A/B R
3003: 2048 HTL A/B R
3005: 1024 HTL A/B
3006: 1024 TTL A/B
3007: 2048 HTL A/B
3008: 2048 TTL A/B
3009: 1024 HTL A/B unipolar
3011: 2048 HTL A/B unipolar
3020: 2048 TTL A/B R, with sense
3081: SSI, Singleturn, 24 V
3082: SSI, Multiturn 4096, 24 V
3090: 4096, HTL, A/B, SSI, Singleturn
9000: Pulse encoder s_set
9001: Pulse encoder n_set
9999: User-defined
10000: Identify encoder
10050: Encoder with EnDat interface identified
10051: DRIVE-CLiQ encoder identified
10100: Identify encoder (waiting)

Caution: An encoder type with p0400 < 9000 defines an encoder for which there is an encoder parameter list. When selecting a catalog encoder (p0400 < 9000) the parameters from the encoder parameter list cannot be changed (write protection). To remove write protection, the encoder type should be set to a third-party encoder (p0400 = 9999).

Notice: If required, the list of motor codes/encoder codes can be found in the Appendix of the List Manual.

Note: The connected encoder can be identified by setting p0400 to 10000 or 10100. This assumes that the encoder supports this method, which is possible in the following cases: Motor with DRIVE-CLiQ, encoder with EnDat interface, DRIVE-CLiQ encoder.

The encoder data (e.g. pulse number p0408) can only be changed when p0400 = 9999.

When using an encoder with track A/B and zero pulse, as standard, fine synchronization is not set using a zero mark. If, for a synchronous motor, fine synchronization is to be realized using a zero mark, then the following must be executed:

- set p0400 to 9999
- set p0404.15 to 1

Prerequisite:

Coarse synchronization must be selected (e.g. pole position identification) and the zero pulse of the encoder must be either mechanically or electronically (p0431) adjusted to the pole position.

For p0400 = 10000 the following applies:

If an identification is not possible, then p0400 is set to 0.

For p0400 = 10100 the following applies:

If an identification is not possible, p0400 remains set to 10100 until it becomes possible.

For p0400 = 9000, 9001 the following applies:

- for p0400 = 9000 and p0184 > 0 the following BICO interconnection is established: CI: p2530 = CO: r2531
- for p0400 = 9001 and p0184 > 0 the following BICO interconnection is established: CI: p1155 = CO: r0061
- write protection for the parameters from the encoder parameter list is lifted
- check the encoder parameters and make any necessary corrections

p0401[0...n] Encoder type OEM selection / Enc type OEM sel

SERVO_S110-DP, SERVO_S110-CAN, SERVO_S110-PN

Can be changed: C2(1, 4)	**Calculated:** -	**Access level:** 2
Data type: Integer16	**Dyn. index:** EDS, p0140	**Func. diagram:** 1580, 4704
P-Group: Encoder	**Unit group:** -	**Unit selection:** -
Not for motor type: -	**Scaling:** -	**Expert list:** 1
Min	**Max**	**Factory setting**
0	32767	0

Description: Selects the encoder from the list of encoder types that the OEM supports.

Note: The connected encoder can be identified by p0400 = 10000. This means that the encoder must support this and is possible in the following cases: Motor with DRIVE-CLiQ, encoder with EnDat interface.

If an identification is not possible, then p0400 is set to 0.

The encoder data (e.g. pulse number p0408) can only be changed when p0400 = 9999.

Using p0400 = 20000, the encoder type can be selected from the list of OEM encoders using p0401.

p0404[0...n] Encoder configuration effective / Enc_config eff

SERVO_S110-DP, SERVO_S110-CAN, SERVO_S110-PN

Can be changed: C2(4)	**Calculated:** -	**Access level:** 3
Data type: Unsigned32	**Dyn. index:** EDS, p0140	**Func. diagram:** 4010, 4704
P-Group: Encoder	**Unit group:** -	**Unit selection:** -
Not for motor type: -	**Scaling:** -	**Expert list:** 1
Min	**Max**	**Factory setting**
-	-	0000 0000 0000 0000 0000 0000 0000 0000 bin

Description: Settings for the basic encoder properties.

Bit field:

Bit	Signal name	1 signal	0 signal	FP
00	Linear encoder	Yes	No	-
01	Absolute encoder	Yes	No	-
02	Multiturn encoder	Yes	No	-
03	Track A/B sq-wave	Yes	No	-
04	Track A/B sine	Yes	No	-
05	Track C/D	Yes	No	-
06	Hall sensor	Yes	No	-
08	EnDat encoder	Yes	No	-
09	SSI encoder	Yes	No	-
10	DRIVE-CLiQ encoder	Yes	No	-
11	Digital encoder	Yes	No	-

12	Equidistant zero mark	Yes	No	-
13	Irregular zero mark	Yes	No	-
14	Distance-coded zero mark	Yes	No	-
15	Commutation with zero mark (not ASM)	Yes	No	-
16	Acceleration	Yes	No	-
17	Track A/B analog	Yes	No	-
20	Voltage level 5 V	Yes	No	-
21	Voltage level 24 V	Yes	No	-
22	Remote sense (only SMC30)	Yes	No	-
23	Resolver excit	Yes	No	-

Caution: This parameter is automatically pre-set for encoders from the encoder list (p0400).

When selecting a catalog encoder, this parameter cannot be changed (write protection). Information in p0400 should be carefully observed when removing write protection.

Notice: If an SSI encoder (bit 9 = 1) is used as motor encoder for permanent-magnet synchronous motors, then this is only permissible in conjunction with an additional A/B track (bit 3 = 1 or bit 4 = 1).

Note: ZM: Zero mark

SMC: Sensor Module Cabinet

If a technique to determine the commutation information/data has not been selected (e.g. track C/D, Hall sensor), and the encoder pulse number is an integer multiple of the pole number, then the following applies:

The track A/B is adjusted to match the magnetic position of the motor.

Re bit 01, 02 (absolute encoder, multiturn encoder):

These bits can only be selected for EnDat encoders, SSI encoders or DRIVE-CLiQ encoders.

Re bit 10 (DRIVE-CLiQ encoder):

This bit is only used for the large-scale integrated DRIVE-CLiQ encoders that provide their encoder data directly in DRIVE-CLiQ format without converting this data. This bit is not, therefore, set for first-generation DRIVE-CLiQ encoders.

Re bit 12 (equidistant zero mark):

The zero marks occur at regular intervals (e.g. rotary encoder with 1 zero mark per revolution or linear encoder with constant zero mark distance).

The bit activates monitoring of the zero mark distance (p0424/p0425, linear/rotary) or in the case of the linear encoder with 1 zero mark and p0424 = 0 zero mark monitoring is activated.

Re bit 13 (irregular zero mark):

The zero marks occur at irregular intervals (e.g. a linear scale with only 1 zero mark in the traversing range). The zero mark distance is not monitored.

Re bit 14 (distance-coded zero mark):

The distance (clearance) between two or several consecutive zero marks allows the absolute position to be calculated.

Re bit 15 (commutation with zero mark):

Only applicable for synchronous motors.

The function can be de-selected by priority via p0430.23.

For distance-coded zero marks, the following applies:

The phase sequence of the C/D track (if available) must be the same as the phase sequence of the encoder (A/B track).

The phase sequence of the Hall signal (if available) must be the same as the phase sequence of the motor. Further, the position of the Hall sensor must be mechanically adjusted to the motor EMF.

The fine synchronization is only started after two zero marks have been passed.

p0405[0...n] Square-wave encoder track A/B / Sq-wave enc A/B

SERVO_S110-DP, SERVO_S110-CAN, SERVO_S110-PN

Can be changed: C2(4)	**Calculated:** -	**Access level:** 3
Data type: Unsigned32	**Dyn. index:** EDS, p0140	**Func. diagram:** 4704
P-Group: Encoder	**Unit group:** -	**Unit selection:** -
Not for motor type: -	**Scaling:** -	**Expert list:** 1
Min	**Max**	**Factory setting**
-	-	0000 1111 bin

Description: Settings for the track A/B in a square-wave encoder.

For square-wave encoders, p0404.3 must also be 1.

Bit field:

Bit	Signal name	1 signal	0 signal	FP
00	Signal	Bipolar	Unipolar	-
01	Level	TTL	HTL	-
02	Track monitoring	A/B <> -A/B	None	-
03	Zero pulse	Same as A/B track	24 V unipolar	-
04	Switching threshold	High	Low	-
05	Pulse/direction	Active	Inactive	-

Caution: This parameter is automatically pre-set for encoders from the encoder list (p0400). When selecting a catalog encoder, this parameter cannot be changed (write protection). Information in p0400 should be carefully observed when removing write protection.

Note: Re bit 02:

When the function is activated, track monitoring can be de-activated by setting p0437.26.

Re bit 05:

When the function is activated, a frequency setpoint and a direction for traveling can be entered via an encoder interface.

p0408[0...n] Rotary encoder pulse number / Rot enc pulse No.

SERVO_S110-DP, SERVO_S110-CAN, SERVO_S110-PN

Can be changed: C2(4)	**Calculated:** -	**Access level:** 3
Data type: Unsigned32	**Dyn. index:** EDS, p0140	**Func. diagram:** 4010, 4704
P-Group: Encoder	**Unit group:** -	**Unit selection:** -
Not for motor type: -	**Scaling:** -	**Expert list:** 1
Min	**Max**	**Factory setting**
0	16777215	2048

Description: Sets the number of pulses for a rotary encoder.

Caution: This parameter is automatically pre-set for encoders from the encoder list (p0400). When selecting a catalog encoder, this parameter cannot be changed (write protection). Information in p0400 should be carefully observed when removing write protection.

Note: The number of pole pairs for a resolver is entered here.

The smallest permissible value is 1 pulse.

p0410[0...n] Encoder inversion actual value / Enc inv act value

SERVO_S110-DP, SERVO_S110-CAN, SERVO_S110-PN

Can be changed: C2(4)	**Calculated:** -	**Access level:** 3
Data type: Unsigned16	**Dyn. index:** EDS, p0140	**Func. diagram:** -
P-Group: Encoder	**Unit group:** -	**Unit selection:** -
Not for motor type: -	**Scaling:** -	**Expert list:** 1
Min	**Max**	**Factory setting**
-	-	0000 bin

Description: Setting to invert actual values.

Bit field:

Bit	Signal name	1 signal	0 signal	FP
00	Invert speed actual value	Yes	No	4710, 4715
01	Invert position actual value	Yes	No	4704

Note: The inversion influences the following parameters:

Bit 00: r0061, r0063 (exception: encoderless control), r0094

Bit 01: r0482, r0483

p0414[0...n] Redundant coarse position value relevant bits (identified) / Relevant bits

SERVO_S110-DP, SERVO_S110-CAN, SERVO_S110-PN

Can be changed: C2(4)	**Calculated:** -	**Access level:** 3
Data type: Unsigned16	**Dyn. index:** EDS, p0140	**Func. diagram:** -
P-Group: Encoder	**Unit group:** -	**Unit selection:** -
Not for motor type: -	**Scaling:** -	**Expert list:** 1
Min	**Max**	**Factory setting**
0	16	16

Description: Sets the number of relevant bits for the redundant coarse position value.

p0415[0...n] Gx_XIST1 Coarse position safe most significant bit (identified) / Gx_XIST1 safe MSB

SERVO_S110-DP, SERVO_S110-CAN, SERVO_S110-PN

Can be changed: C2(4)	**Calculated:** -	**Access level:** 3
Data type: Unsigned16	**Dyn. index:** EDS, p0140	**Func. diagram:** -
P-Group: Encoder	**Unit group:** -	**Unit selection:** -
Not for motor type: -	**Scaling:** -	**Expert list:** 1
Min	**Max**	**Factory setting**
0	31	14

Description: Sets the bit number for the safe most significant bit (MSB) of the Gx_XIST1 coarse position.

Note: MSB: Most Significant Bit

p0418[0...n] Fine resolution Gx_XIST1 (in bits) / Enc fine Gx_XIST1

SERVO_S110-DP, SERVO_S110-CAN, SERVO_S110-PN

Can be changed: C2(4)	**Calculated:** -	**Access level:** 3
Data type: Unsigned8	**Dyn. index:** EDS, p0140	**Func. diagram:** 4010, 4704
P-Group: Encoder	**Unit group:** -	**Unit selection:** -
Not for motor type: -	**Scaling:** -	**Expert list:** 1
Min	**Max**	**Factory setting**
2	18	11

Description: Sets the fine resolution in bits of the incremental position actual values.

Note: The parameter applies for the following process data:

- Gx_XIST1
- Gx_XIST2 for reference mark or flying measurement

The fine resolution specifies the fraction between encoder pulses. Depending on the physical measurement principle, an encoder pulse can be broken down into a different number of fractions (e.g. squarewave encoder: 2 bit = resolution 4, sin/cos encoder: Typical 11 bit = resolution 2048).

For a squarewave encoder, with the factory setting, the least significant bits have the value zero, i.e. they do not supply any useful information.

For especially high quality measuring systems, the fine resolution must be increased corresponding to the available accuracy.

p0419[0...n] Fine resolution absolute value Gx_XIST2 (in bits) / Enc fine Gx_XIST2

SERVO_S110-DP, SERVO_S110-CAN, SERVO_S110-PN

Can be changed: C2(4)	**Calculated:** -	**Access level:** 3
Data type: Unsigned8	**Dyn. index:** EDS, p0140	**Func. diagram:** 4704, 4710
P-Group: Encoder	**Unit group:** -	**Unit selection:** -
Not for motor type: -	**Scaling:** -	**Expert list:** 1
Min	**Max**	**Factory setting**
2	18	9

Description: Sets the fine resolution in bits of the absolute position actual values.

Dependency: Refer to: p0418

Note: This parameter applies to process data Gx_XIST2 when reading the absolute value.

p0421[0...n] Absolute encoder rotary multiturn resolution / Enc abs multiturn

SERVO_S110-DP, SERVO_S110-CAN, SERVO_S110-PN

Can be changed: C2(4)	**Calculated:** -	**Access level:** 3
Data type: Unsigned16	**Dyn. index:** EDS, p0140	**Func. diagram:** 4704
P-Group: Encoder	**Unit group:** -	**Unit selection:** -
Not for motor type: -	**Scaling:** -	**Expert list:** 1
Min	**Max**	**Factory setting**
0	65535	4096

Description: Sets the number of rotations that can be resolved for a rotary absolute encoder.

Caution: This parameter is automatically pre-set for encoders from the encoder list (p0400). When selecting a catalog encoder, this parameter cannot be changed (write protection). Information in p0400 should be carefully observed when removing write protection.

p0423[0...n] Absolute encoder rotary singleturn resolution / Enc abs singleturn

SERVO_S110-DP, SERVO_S110-CAN, SERVO_S110-PN

Can be changed: C2(4)	**Calculated:** -	**Access level:** 3
Data type: Unsigned32	**Dyn. index:** EDS, p0140	**Func. diagram:** 4704
P-Group: Encoder	**Unit group:** -	**Unit selection:** -
Not for motor type: -	**Scaling:** -	**Expert list:** 1
Min	**Max**	**Factory setting**
0	1073741823	8192

Description: Sets the number of measuring steps per revolution for a rotary absolute encoder. The resolution refers to the absolute position.

Caution: This parameter is automatically pre-set for encoders from the encoder list (p0400). When selecting a catalog encoder, this parameter cannot be changed (write protection). Information in p0400 should be carefully observed when removing write protection.

p0425[0...n] Encoder rotary zero mark distance / Enc rot dist ZM

SERVO_S110-DP, SERVO_S110-CAN, SERVO_S110-PN

Can be changed: C2(4)	**Calculated:** -	**Access level:** 3
Data type: Unsigned32	**Dyn. index:** EDS, p0140	**Func. diagram:** 4704, 8570
P-Group: Encoder	**Unit group:** -	**Unit selection:** -
Not for motor type: -	**Scaling:** -	**Expert list:** 1
Min	**Max**	**Factory setting**
0	16777215	2048

Description: Sets the distance in pulses between two zero marks for a rotary encoder. This information is used for zero mark monitoring.

Caution: This parameter is automatically pre-set for encoders from the encoder list (p0400). When selecting a catalog encoder, this parameter cannot be changed (write protection). Information in p0400 should be carefully observed when removing write protection.

Note: For distance-coded zero marks, this means the basic distance.

p0426[0...n] Encoder zero mark differential distance / Enc ZM Dif_dist

SERVO_S110-DP, SERVO_S110-CAN, SERVO_S110-PN

Can be changed: C2(4)	**Calculated:** -	**Access level:** 3
Data type: Unsigned16	**Dyn. index:** EDS, p0140	**Func. diagram:** -
P-Group: Encoder	**Unit group:** -	**Unit selection:** -
Not for motor type: -	**Scaling:** -	**Expert list:** 1
Min	**Max**	**Factory setting**
1	65535	1

Description: Sets the differential distance with distance-coded zero marks [signal periods].
The value corresponds to jump displacement of "zero mark with interference".

Caution: This parameter is automatically pre-set for encoders from the encoder list (p0400). When selecting a catalog encoder, this parameter cannot be changed (write protection). Information in p0400 should be carefully observed when removing write protection.

p0427[0...n] Encoder SSI baud rate / Enc SSI baud rate

SERVO_S110-DP, SERVO_S110-CAN, SERVO_S110-PN

Can be changed: C2(4)	**Calculated:** -	**Access level:** 3
Data type: FloatingPoint32	**Dyn. index:** EDS, p0140	**Func. diagram:** -
P-Group: Encoder	**Unit group:** -	**Unit selection:** -
Not for motor type: -	**Scaling:** -	**Expert list:** 1
Min	**Max**	**Factory setting**
0 [kHz]	65535 [kHz]	100 [kHz]

Description: Sets the baud rate for an SSI encoder.

Caution: This parameter is automatically pre-set for encoders from the encoder list (p0400). When selecting a catalog encoder, this parameter cannot be changed (write protection). Information in p0400 should be carefully observed when removing write protection.

Note: SSI: Synchronous Serial Interface

p0428[0...n] Encoder SSI monoflop time / Enc SSI t_monoflop

SERVO_S110-DP, SERVO_S110-CAN, SERVO_S110-PN

Can be changed: C2(4)	**Calculated:** -	**Access level:** 3
Data type: Unsigned16	**Dyn. index:** EDS, p0140	**Func. diagram:** -
P-Group: Encoder	**Unit group:** -	**Unit selection:** -
Not for motor type: -	**Scaling:** -	**Expert list:** 1
Min	**Max**	**Factory setting**
0 [µs]	65535 [µs]	30 [µs]

Description: Sets the minimum delay time between two data transfers of the absolute value for an SSI encoder.

Caution: This parameter is automatically pre-set for encoders from the encoder list (p0400). When selecting a catalog encoder, this parameter cannot be changed (write protection). Information in p0400 should be carefully observed when removing write protection.

p0429[0...n] Encoder SSI configuration / Enc SSI config

SERVO_S110-DP, SERVO_S110-CAN, SERVO_S110-PN

Can be changed: C2(4)	**Calculated:** -	**Access level:** 3
Data type: Unsigned16	**Dyn. index:** EDS, p0140	**Func. diagram:** -
P-Group: Encoder	**Unit group:** -	**Unit selection:** -
Not for motor type: -	**Scaling:** -	**Expert list:** 1
Min	**Max**	**Factory setting**
-	-	0000 0000 bin

Description: Sets the configuration for an SSI encoder.

Bit field:

Bit	Signal name	1 signal	0 signal	FP
00	Transfer code	Binary code	Gray code	-
02	Transfer absolute value twice	Yes	No	-
06	Data line during the monoflop time	High level	Low level	-

Caution: This parameter is automatically pre-set for encoders from the encoder list (p0400). When selecting a catalog encoder, this parameter cannot be changed (write protection). Information in p0400 should be carefully observed when removing write protection.

Note: Re bit 06:

The quiescent signal level of the data line corresponds to the inverted, set level.

p0430[0...n] Sensor Module configuration / SM config

SERVO_S110-DP, SERVO_S110-CAN, SERVO_S110-PN

Can be changed: C2(4)	**Calculated:** -	**Access level:** 3
Data type: Unsigned32	**Dyn. index:** EDS, p0140	**Func. diagram:** -
P-Group: Encoder	**Unit group:** -	**Unit selection:** -
Not for motor type: -	**Scaling:** -	**Expert list:** 1
Min	**Max**	**Factory setting**
-	-	1110 0000 0000 1000 0000 0000 0000 0000 bin

Description: Sets the configuration of the Sensor Module.

Bit field:

Bit	Signal name	1 signal	0 signal	FP
17	Burst oversampling	Yes	No	-
18	Continuous oversampling (reserved)	Yes	No	-
19	Safety position actual value sensing	Yes	No	-
20	Speed calculation mode (only SMC30)	Incremental diff	Flank time meas	-
21	Zero mark tolerance	Yes	No	-
22	Rot pos adapt	Yes	No	-
23	De-select commutation with zero mark	Yes	No	-
24	Commutation with selected zero mark	Yes	No	-
25	Switch off encoder voltage supply during parking	Yes	No	-
27	Extrapolate position values	Yes	No	-
28	Cubic correction	Yes	No	-
29	Phase correction	Yes	No	-
30	Amplitude correction	Yes	No	-
31	Offset correction	Yes	No	-

Notice: A bit-wise configuration is only possible if the corresponding property is also present in r0458.

Note: Re bit 17 (burst oversampling):
- if bit = 1, burst oversampling is switched on.

Re bit 18 (continuous oversampling):
- if bit = 1, continuous oversampling is switched on.

Re bit 19 (Safety position actual value sensing):
- if bit = 1, the Safety position actual value is transferred in the cyclic telegram.

Re bit 20 (speed calculation mode):
- if bit = 1, the speed is calculated via incremental difference without extrapolation.
- if bit = 0, the speed is calculated via edge time measurement with extrapolation. p0453 is effective in this mode.

Re bit 21 (zero mark tolerance):
- if bit = 1, a one-off zero mark distance error is tolerated. In the event of a defect, the fault F3x100/F3x101 does not appear, but alarm A3x400/A3x401 does.

Re bit 22 (rotor position adaptation):
- if bit = 1, the rotor position is corrected automatically. The correction speed is +/-1/4 encoder pulse per zero mark distance.

Re bit 23 (de-select commutation with zero mark):
- The bit should only be set for encoders that have not been adjusted.

Re bit 24 (commutation with selected zero mark):
- if bit = 1, the commutation position is corrected via a selected zero mark.

Re bit 25 (disconnect the encoder power supply on parking):
- if bit = 1, the encoder power supply is switched off on parking (0 V).
- if bit = 0, the encoder power supply is not switched off on parking, it is reduced from 24 V to 5 V.

Re bit 27 (extrapolate position values):
- if bit = 1, the extrapolation of the position values is activated.

Re bit 28 (cubic correction);
- if bit = 1, the cubic correction for track A/B sine is activated.

Re bit 29 (phase correction):
- if bit = 1, the phase correction for track A/B sine is activated.

Re bit 30 (amplitude correction):
- if bit = 1, the amplitude correction for track A/B sine is activated.

Re bit 31 (offset correction):
- if bit = 1, the offset correction for track A/B sine is activated.

p0431[0...n] Angular commutation offset / Ang_com offset

SERVO_S110-DP, SERVO_S110-CAN, SERVO_S110-PN

Can be changed: C2(4)	**Calculated:** -	**Access level:** 3
Data type: FloatingPoint32	**Dyn. index:** EDS, p0140	**Func. diagram:** -
P-Group: Encoder	**Unit group:** -	**Unit selection:** -
Not for motor type: -	**Scaling:** -	**Expert list:** 1
Min	**Max**	**Factory setting**
-180.00 [°]	180.00 [°]	0.00 [°]

Description: Sets the angular commutation offset.

Dependency: The value is taken into account in r0094.
Refer to: r0094, r1778

Caution: When the firmware is upgraded from V2.3 to V2.4 or higher, the value must be reduced by 60° if all the following conditions are fulfilled:
- The motor is a synchronous motor (p0300 = 2, 2xx, 4, 4xx).
- The encoder is a resolver (p0404.23 = 1).
- The actual speed value is inverted (p0410.0 = 1).

Notice: The angular commutation offset cannot be generally taken from other drive systems. As a minimum - the sign of the offset determined for SIMODRIVE 611 digital and SIMODRIVE 611 universal must be reversed for SINAMICS (p0431 (SINAMICS) = -p1016 (SIMODRIVE)).

Note: Angular commutation offset, angular difference between electrical position of encoder and flux position.
For p0404.5 = 1 (track C/D) the following applies:
The angular offset in p0431 acts on track A/B, the zero mark on track C/D.

For p0404.6 = 1 (Hall sensor) the following applies:
The angular offset in p0431 acts on track A/B and the zero mark.

p0432[0...n] Gearbox factor encoder revolutions / Grbx_fact enc_rev

SERVO_S110-DP, SERVO_S110-CAN, SERVO_S110-PN

Can be changed: C2(4)	**Calculated:** -	**Access level:** 3
Data type: Integer16	**Dyn. index:** EDS, p0140	**Func. diagram:** -
P-Group: Encoder	**Unit group:** -	**Unit selection:** -
Not for motor type: -	**Scaling:** -	**Expert list:** 1
Min	**Max**	**Factory setting**
1	10000	1

Description: Sets the encoder revolutions for the gearbox factor of the encoder evaluation.
The gearbox factor specifies the ratio between the encoder shaft and motor shaft (for motor encoders) or between the encoder shaft and the load.

Dependency: This parameter can only be set for p0402 = 9999.
Refer to: p0410, p0433

Note: Negative gearbox factors should be implemented with p0410.

p0433[0...n] Gearbox factor motor/load revolutions / Grbx_fact mot_rev

SERVO_S110-DP, SERVO_S110-CAN, SERVO_S110-PN

Can be changed: C2(4)	**Calculated:** -	**Access level:** 3
Data type: Integer16	**Dyn. index:** EDS, p0140	**Func. diagram:** -
P-Group: Encoder	**Unit group:** -	**Unit selection:** -
Not for motor type: -	**Scaling:** -	**Expert list:** 1
Min	**Max**	**Factory setting**
1	10000	1

Description: Sets the motor and load revolutions for the gearbox factor of the encoder evaluation.
The gearbox factor specifies the ratio between the encoder shaft and motor shaft (for motor encoders) or between the encoder shaft and the load.

Dependency: This parameter can only be set for p0402 = 9999.
Refer to: p0410, p0432

Note: Negative gearbox factors should be implemented with p0410.

p0434[0...n] Encoder SSI error bit / Enc SSI error bit

SERVO_S110-DP, SERVO_S110-CAN, SERVO_S110-PN

Can be changed: C2(4)	**Calculated:** -	**Access level:** 3
Data type: Unsigned16	**Dyn. index:** EDS, p0140	**Func. diagram:** -
P-Group: Encoder	**Unit group:** -	**Unit selection:** -
Not for motor type: -	**Scaling:** -	**Expert list:** 1
Min	**Max**	**Factory setting**
0	65535	0

Description: Sets the position and level of the error bit in the SSI protocol.

Notice: The bit may only be positioned before (p0446) or after (p0448) the absolute value in the SSI protocol.

Note: Value = dcba
ba: Position of the error bit in the protocol (0 ... 63).
c: Level (0: Low level, 1: High level).
d: Status of the evaluation (0: Off, 1: On with 1 error bit, 2: On with 2 error bits ... 9: On with 9 error bits).
For several error error bits, the following applies:
- the position specified under ba and the additional bits are assigned increasing consecutively.
- the level set under c applies to all error bits.
Example:
p0434 = 1013
--> The evaluation is switched in and the error bit is at position 13 with a low level.
p0434 = 1113
--> The evaluation is switched in and the error bit is at position 13 with a high level.

p0435[0...n] Encoder SSI alarm bit / Enc SSI alarm bit

SERVO_S110-DP, SERVO_S110-CAN, SERVO_S110-PN

Can be changed: C2(4)	**Calculated:** -	**Access level:** 3
Data type: Unsigned16	**Dyn. index:** EDS, p0140	**Func. diagram:** -
P-Group: Encoder	**Unit group:** -	**Unit selection:** -
Not for motor type: -	**Scaling:** -	**Expert list:** 1
Min	**Max**	**Factory setting**
0	65535	0

Description: Sets the position and level of the alarm bit in the SSI protocol.

Notice: The bit may only be positioned before (p0446) or after (p0448) the absolute value in the SSI protocol.

Note: Value = dcba
ba: Position of the alarm bit in protocol (0 ... 63).
c: Level (0: Low level, 1: High level).
d: State of the evaluation (0: Off, 1: On).
Example:
p0435 = 1014
--> The evaluation is switched in and the alarm bit is at position 14 with a low level.
p0435 = 1114
--> The evaluation is switched in and the alarm bit is at position 14 with a high level.

p0436[0...n] Encoder SSI parity bit / Enc SSI parity bit

SERVO_S110-DP, SERVO_S110-CAN, SERVO_S110-PN

Can be changed: C2(4)	**Calculated:** -	**Access level:** 3
Data type: Unsigned16	**Dyn. index:** EDS, p0140	**Func. diagram:** -
P-Group: Encoder	**Unit group:** -	**Unit selection:** -
Not for motor type: -	**Scaling:** -	**Expert list:** 1
Min	**Max**	**Factory setting**
0	65535	0

Description: Sets the position and parity of the parity bit in the SSI protocol.

Notice: The bit may only be positioned before (p0446) or after (p0448) the absolute value in the SSI protocol.

Note: Value = dcba
ba: Position of the parity bit in the protocol (0 ... 63).
c: Parity (0: even, 1: uneven).
d: State of the evaluation (0: Off, 1: On).
Example:
p0436 = 1015
--> The evaluation is switched in and the parity bit is at position 15 with even parity.
p0436 = 1115
--> The evaluation is switched in and the parity bit is at position 15 with uneven parity.

p0437[0...n] Sensor Module configuration extended / SM config ext

SERVO_S110-DP, SERVO_S110-CAN, SERVO_S110-PN

Can be changed: C2(4)	**Calculated:** -	**Access level:** 3
Data type: Unsigned32	**Dyn. index:** EDS, p0140	**Func. diagram:** -
P-Group: Encoder	**Unit group:** -	**Unit selection:** -
Not for motor type: -	**Scaling:** -	**Expert list:** 1
Min	**Max**	**Factory setting**
-	-	0011 0000 0000 0000 0000 1000 0000 0000 bin

Description: Sets the extended configuration of the Sensor Module.

Bit field:

Bit	Signal name	1 signal	0 signal	FP
00	Data logger	Yes	No	-
01	Zero mark edge detection	Yes	No	-
02	Correction position actual value XIST1	Yes	No	-
04	Edge evaluation bit 0	Yes	No	-
05	Edge evaluation bit 1	Yes	No	-

06	Freeze the speed actual value for dn/dt errors	Yes	No	-
07	Accumulate uncorrected encoder pulses	Yes	No	-
11	Fault handling after PROFIdrive	Yes	No	-
12	Activate additional messages	Yes	No	-
26	Track monitoring de-selection	Yes	No	-
28	EnDat linear encoder monitoring incremental/absolute	Yes	No	-
29	EnDat encoder initialization with high accuracy	Yes	No	-
31	Analog unipolar track monitoring	Yes	No	-

Dependency: Refer to: p0430, r0459

Note: A value of zero is displayed if an encoder is not present.

Re bit 00:

When the data logger (trace) is activated, in the case of a fault, data before and after the event are recorded (traced) and saved in files on the non-volatile memory medium. Experts can then evaluate this data.

Re bit 01:

If bit = 0, the zero mark is evaluated by ANDing tracks A and B and the zero mark.

For bit = 1, the zero mark is evaluated depending on the direction of rotation detected. For a positive direction of rotation, the positive edge of the zero mark is considered and for a negative direction of rotation, the negative edge of the zero mark.

Re bit 02:

If the bit is set, in the event of a deviation less than the tolerance window for the zero mark (p4681, p4682), the pulses per revolution are corrected. If the bit is not set, encoder fault F3x131 is triggered.

Re Bit 04 and Bit 05:

The actual hardware only supports 1x or 4x signal evaluation.

Bit 5/4 = 0/0: Signal evaluation per period, 4x.

Bit 5/4 = 1/0: Illegal setting.

Bit 5/4 = 0/1: Signal evaluation per period, 1x.

Bit 5/4 = 1/1: Illegal setting.

Re bit 06:

If the function is active, when dn/dt monitoring responds, the speed actual value is internally frozen for a time equivalent to two current controller clock cycles. The rotor position continues to be integrated. The actual value is then re-enabled after this time has expired.

Re bit 07:

If the bit is set, the encoder pulses which have not been corrected are added to p4688 at the zero mark.

Re bit 11:

If the bit is set, the Sensor Module checks within a certain time grid whether the fault cause is still present. This enables the Sensor Module to switch from the fault state to the operating state and provide valid actual values automatically. The faults are displayed until the user acknowledges them.

Re bit 12:

Additional fault messages can be activated for extended fault diagnostics.

Re bit 20:

If the bit is set, the bandwidth of the analog filter for SMx10 (resolver) and SMx20 (sin/cos encoder) can be set via p4660.

Re bit 26:

Track monitoring is de-activated for the square-wave encoders when the bit is set, even if the monitoring function is selected in p0405.2.

Re bit 28:

Monitoring of the difference between incremental and absolute position in the case of linear encoders.

Re bit 29:

When the bit is set, the EnDat encoder is initialized under a certain speed and, therefore, with high accuracy. If initialization at a higher speed is requested, fault F31151, F32151, or F33151 is output.

Re bit 31:

When monitoring is active, the levels of the individual track signals and the corresponding inverted track signals are monitored separately.

p0438[0...n] Squarewave encoder filter time / Enc t_filt

SERVO_S110-DP, SERVO_S110-CAN, SERVO_S110-PN

Can be changed: C2(4)	**Calculated:** -	**Access level:** 3
Data type: FloatingPoint32	**Dyn. index:** EDS, p0140	**Func. diagram:** -
P-Group: Encoder	**Unit group:** -	**Unit selection:** -
Not for motor type: -	**Scaling:** -	**Expert list:** 1
Min	**Max**	**Factory setting**
0.00 [µs]	100.00 [µs]	0.64 [µs]

Description: Sets the filter time for a squarewave encoder.
The hardware of the squarewave encoder only supports the following values:
0: No filtering
0.04 µs
0.64 µs
2.56 µs
10.24 µs
20.48 µs

Dependency: Refer to: r0452

Notice: If the filter time is too long, the track signals A/B/R may be suppressed and the appropriate messages output.

Note: The most suitable filter time depends on the number of pulses and maximum speed of the square-wave encoder.
The filter time is automatically corrected to the next value when entering a non-specified value. In this case, no message is output.
The effective filter time is displayed in r0452.

p0439[0...n] Encoder ramp-up time / Enc ramp-up time

SERVO_S110-DP, SERVO_S110-CAN, SERVO_S110-PN

Can be changed: C2(4)	**Calculated:** -	**Access level:** 3
Data type: Unsigned16	**Dyn. index:** EDS, p0140	**Func. diagram:** -
P-Group: Encoder	**Unit group:** -	**Unit selection:** -
Not for motor type: -	**Scaling:** -	**Expert list:** 1
Min	**Max**	**Factory setting**
0 [ms]	65535 [ms]	0 [ms]

Description: Sets the ramp-up time for the encoder.
The encoder supplies stable track signals once this time has elapsed.

Caution: This parameter is automatically pre-set for encoders from the encoder list (p0400). When selecting a catalog encoder, this parameter cannot be changed (write protection). Information in p0400 should be carefully observed when removing write protection.

p0440[0...n] Copy encoder serial number / Copy enc ser_no

SERVO_S110-DP, SERVO_S110-CAN, SERVO_S110-PN

Can be changed: C2(4)	**Calculated:** -	**Access level:** 3
Data type: Integer16	**Dyn. index:** EDS, p0140	**Func. diagram:** -
P-Group: Encoder	**Unit group:** -	**Unit selection:** -
Not for motor type: -	**Scaling:** -	**Expert list:** 1
Min	**Max**	**Factory setting**
0	1	0

Description: Copies the actual serial number of the encoder belonging to this Encoder Data Set (EDS) to p0441 ... p0445.
Example:
For p0440[0] = 1, the serial number of the encoder belonging EDS0 is copied to p0441[0] ... p0445[0].

Value:
0: No action
1: Transfer serial number

Dependency: Refer to: p0441, p0442, p0443, p0444, p0445, r0460, r0461, r0462, r0463, r0464, p1990

Note: For encoders with serial number, encoder replacement is monitored in order to request angular commutation calibration (adjustment) for motor encoders and absolute calibration for direct measuring systems with absolute value data. The serial number, which from then onwards is used for monitoring purposes, can be transferred using p0440.

In the following cases, copying is automatically started in the following cases:
1.) When commissioning 1FT6, 1FK6, 1FK7 motors.
2.) When writing into p0431.
3.) For p1990 = 1.
p0440 is automatically set to 0 when the copying has been completed.
In order to permanently accept the copied values, it is necessary to save in a non-volatile fashion (p0977).

p0441[0...n] Encoder commissioning serial number part 1 / Enc comm ser_no 1

SERVO_S110-DP, SERVO_S110-CAN, SERVO_S110-PN

Can be changed: C2(4)	**Calculated:** CALC_MOD_ALL	**Access level:** 4
Data type: Unsigned32	**Dyn. index:** EDS, p0140	**Func. diagram:** -
P-Group: Encoder	**Unit group:** -	**Unit selection:** -
Not for motor type: -	**Scaling:** -	**Expert list:** 1
Min	**Max**	**Factory setting**
0000 hex	FFFF FFFF hex	0000 hex

Description: Serial number part 1 of the encoder for the commissioning.
Dependency: Refer to: p0440, p0442, p0443, p0444, p0445, r0460, r0461, r0462, r0463, r0464
Refer to: F07414
Note: A value of zero is displayed if an encoder is not present.

p0442[0...n] Encoder commissioning serial number part 2 / Enc comm ser_no 2

SERVO_S110-DP, SERVO_S110-CAN, SERVO_S110-PN

Can be changed: C2(4)	**Calculated:** CALC_MOD_ALL	**Access level:** 4
Data type: Unsigned32	**Dyn. index:** EDS, p0140	**Func. diagram:** -
P-Group: Encoder	**Unit group:** -	**Unit selection:** -
Not for motor type: -	**Scaling:** -	**Expert list:** 1
Min	**Max**	**Factory setting**
0000 hex	FFFF FFFF hex	0000 hex

Description: Serial number part 2 of the encoder for the commissioning.
Dependency: Refer to: p0440, p0441, p0443, p0444, p0445, r0460, r0461, r0462, r0463, r0464
Refer to: F07414
Note: A value of zero is displayed if an encoder is not present.

p0443[0...n] Encoder commissioning serial number part 3 / Enc comm ser_no 3

SERVO_S110-DP, SERVO_S110-CAN, SERVO_S110-PN

Can be changed: C2(4)	**Calculated:** CALC_MOD_ALL	**Access level:** 4
Data type: Unsigned32	**Dyn. index:** EDS, p0140	**Func. diagram:** -
P-Group: Encoder	**Unit group:** -	**Unit selection:** -
Not for motor type: -	**Scaling:** -	**Expert list:** 1
Min	**Max**	**Factory setting**
0000 hex	FFFF FFFF hex	0000 hex

Description: Serial number part 3 of the encoder for the commissioning.
Dependency: Refer to: p0440, p0441, p0442, p0444, p0445, r0460, r0461, r0462, r0463, r0464
Refer to: F07414
Note: A value of zero is displayed if an encoder is not present.

p0444[0...n] Encoder commissioning serial number part 4 / Enc comm ser_no 4

SERVO_S110-DP, SERVO_S110-CAN, SERVO_S110-PN

Can be changed: C2(4)	**Calculated:** CALC_MOD_ALL	**Access level:** 4
Data type: Unsigned32	**Dyn. index:** EDS, p0140	**Func. diagram:** -
P-Group: Encoder	**Unit group:** -	**Unit selection:** -
Not for motor type: -	**Scaling:** -	**Expert list:** 1
Min	**Max**	**Factory setting**
0000 hex	FFFF FFFF hex	0000 hex

Description: Serial number part 4 of the encoder for the commissioning.
Dependency: Refer to: p0440, p0441, p0442, p0443, p0445, r0460, r0461, r0462, r0463, r0464
Refer to: F07414

Note: A value of zero is displayed if an encoder is not present.

p0445[0...n] Encoder commissioning serial number part 5 / Enc comm ser_no 5

SERVO_S110-DP, SERVO_S110-CAN, SERVO_S110-PN

Can be changed: C2(4)	**Calculated:** CALC_MOD_ALL	**Access level:** 4
Data type: Unsigned32	**Dyn. index:** EDS, p0140	**Func. diagram:** -
P-Group: Encoder	**Unit group:** -	**Unit selection:** -
Not for motor type: -	**Scaling:** -	**Expert list:** 1
Min	**Max**	**Factory setting**
0000 hex	FFFF FFFF hex	0000 hex

Description: Serial number part 5 of the encoder for the commissioning.

Dependency: Refer to: p0440, p0441, p0442, p0443, p0444, r0460, r0461, r0462, r0463, r0464
Refer to: F07414

Note: A value of zero is displayed if an encoder is not present.

p0446[0...n] Encoder SSI number of bits before the absolute value / Enc SSI bit before

SERVO_S110-DP, SERVO_S110-CAN, SERVO_S110-PN

Can be changed: C2(4)	**Calculated:** -	**Access level:** 3
Data type: Unsigned16	**Dyn. index:** EDS, p0140	**Func. diagram:** -
P-Group: Encoder	**Unit group:** -	**Unit selection:** -
Not for motor type: -	**Scaling:** -	**Expert list:** 1
Min	**Max**	**Factory setting**
0	65535	0

Description: Sets the number of bits before the absolute value in the SSI protocol.

Caution: This parameter is automatically pre-set for encoders from the encoder list (p0400). When selecting a catalog encoder, this parameter cannot be changed (write protection). Information in p0400 should be carefully observed when removing write protection.

Note: For example, error bit, alarm bit or parity bit can be positioned at these bits.

p0447[0...n] Encoder SSI number of bits absolute value / Enc SSI bit val

SERVO_S110-DP, SERVO_S110-CAN, SERVO_S110-PN

Can be changed: C2(4)	**Calculated:** -	**Access level:** 3
Data type: Unsigned16	**Dyn. index:** EDS, p0140	**Func. diagram:** -
P-Group: Encoder	**Unit group:** -	**Unit selection:** -
Not for motor type: -	**Scaling:** -	**Expert list:** 1
Min	**Max**	**Factory setting**
0	65535	25

Description: Sets the number of bits for the absolute value in the SSI protocol.

Caution: This parameter is automatically pre-set for encoders from the encoder list (p0400). When selecting a catalog encoder, this parameter cannot be changed (write protection). Information in p0400 should be carefully observed when removing write protection.

p0448[0...n] Encoder SSI number of bits after the absolute value / Enc SSI bit after

SERVO_S110-DP, SERVO_S110-CAN, SERVO_S110-PN

Can be changed: C2(4)	**Calculated:** -	**Access level:** 3
Data type: Unsigned16	**Dyn. index:** EDS, p0140	**Func. diagram:** -
P-Group: Encoder	**Unit group:** -	**Unit selection:** -
Not for motor type: -	**Scaling:** -	**Expert list:** 1
Min	**Max**	**Factory setting**
0	65535	0

Description: Sets the number of bits after the absolute value in the SSI protocol.

Caution: This parameter is automatically pre-set for encoders from the encoder list (p0400). When selecting a catalog encoder, this parameter cannot be changed (write protection). Information in p0400 should be carefully observed when removing write protection.

Note: For example, error bit, alarm bit or parity bit can be positioned at these bits.

p0449[0...n] Encoder SSI number of bits filler bits / Enc SSI fill bits

SERVO_S110-DP, SERVO_S110-CAN, SERVO_S110-PN

Can be changed: C2(4)	**Calculated:** -	**Access level:** 3
Data type: Unsigned16	**Dyn. index:** EDS, p0140	**Func. diagram:** -
P-Group: Encoder	**Unit group:** -	**Unit selection:** -
Not for motor type: -	**Scaling:** -	**Expert list:** 1
Min	**Max**	**Factory setting**
0	65535	1

Description: Sets the number of filler bits for double absolute value transfer in the SSI protocol.

Dependency: Refer to: p0429

Caution: This parameter is automatically pre-set for encoders from the encoder list (p0400). When selecting a catalog encoder, this parameter cannot be changed (write protection). Information in p0400 should be carefully observed when removing write protection.

Note: This parameter is only of significance for p0429.2 = 1.

r0451[0...2] Commutation angle factor / Enc commut_factor

SERVO_S110-DP, SERVO_S110-CAN, SERVO_S110-PN

Can be changed: -	**Calculated:** -	**Access level:** 3
Data type: Unsigned16	**Dyn. index:** -	**Func. diagram:** 4710
P-Group: Encoder	**Unit group:** -	**Unit selection:** -
Not for motor type: -	**Scaling:** -	**Expert list:** 1
Min	**Max**	**Factory setting**
-	-	-

Description: Displays the relationship between the electrical and mechanical pole positions.

Index: [0] = Encoder 1
[1] = Encoder 2
[2] = Reserved

Note: A value of zero is displayed if an encoder is not present.

r0452[0...2] Squarewave encoder filter time display / Enc t_filt displ

SERVO_S110-DP, SERVO_S110-CAN, SERVO_S110-PN

Can be changed: -	**Calculated:** -	**Access level:** 3
Data type: FloatingPoint32	**Dyn. index:** -	**Func. diagram:** -
P-Group: Encoder	**Unit group:** -	**Unit selection:** -
Not for motor type: -	**Scaling:** -	**Expert list:** 1
Min	**Max**	**Factory setting**
- [µs]	- [µs]	- [µs]

Description: Displays the effective filter time for a squarewave encoder.
The filter time is set using p0438.

Index: [0] = Encoder 1
[1] = Encoder 2
[2] = Reserved

Dependency: Refer to: p0438

Note: A value of zero is displayed if an encoder is not present.

p0453[0...n] Pulse encoder evaluation zero speed measuring time / Enc_ev n_0 t_meas

SERVO_S110-DP, SERVO_S110-CAN, SERVO_S110-PN

Can be changed: C2(4)	**Calculated:** -	**Access level:** 3
Data type: FloatingPoint32	**Dyn. index:** EDS, p0140	**Func. diagram:** -
P-Group: Encoder	**Unit group:** -	**Unit selection:** -
Not for motor type: -	**Scaling:** -	**Expert list:** 1
Min	**Max**	**Factory setting**
0.10 [ms]	10000.00 [ms]	1000.00 [ms]

Description: Sets the measuring time for evaluating zero speed.
If no pulses are detected from track A/B during this time, a speed actual value of zero is output.

Dependency: Refer to: r0452

Note: This function is required for slow-running motors so that actual speeds close to zero can be output correctly.

r0455[0...2] Encoder configuration recognized / Enc config act

SERVO_S110-DP, SERVO_S110-CAN, SERVO_S110-PN

Can be changed: -	**Calculated:** -	**Access level:** 3
Data type: Unsigned32	**Dyn. index:** -	**Func. diagram:** -
P-Group: Encoder	**Unit group:** -	**Unit selection:** -
Not for motor type: -	**Scaling:** -	**Expert list:** 1
Min	**Max**	**Factory setting**
-	-	-

Description: Displays the detected encoder configuration.
In this case, the encoder must automatically support the function (e.g. encoder with EnDat interface).

Index: [0] = Encoder 1
[1] = Encoder 2
[2] = Reserved

Bit field:

Bit	Signal name	1 signal	0 signal	FP
00	Linear encoder	Yes	No	-
01	Absolute encoder	Yes	No	-
02	Multiturn encoder	Yes	No	-
03	Track A/B sq-wave	Yes	No	-
04	Track A/B sine	Yes	No	-
05	Track C/D	Yes	No	-
06	Hall sensor	Yes	No	-
08	EnDat encoder	Yes	No	-
09	SSI encoder	Yes	No	-
10	DRIVE-CLiQ encoder	Yes	No	-
11	Digital encoder	Yes	No	-
12	Equidistant zero mark	Yes	No	-
13	Irregular zero mark	Yes	No	-
14	Distance-coded zero mark	Yes	No	-
15	Commutation with zero mark (not ASM)	Yes	No	-
16	Acceleration	Yes	No	-
17	Track A/B analog	Yes	No	-
20	Voltage level 5 V	Yes	No	-
21	Voltage level 24 V	Yes	No	-
22	Remote sense (only SMC30)	Yes	No	-
23	Resolver excit	Yes	No	-

Dependency: Refer to: p0404

Note: ZM: Zero mark
This parameter is only used for diagnostics.
A value of zero is displayed if an encoder is not present.
Re bit 20, 21 (voltage level 5 V, voltage level 24 V):
The voltage level cannot be detected. Therefore, these bits are always set to 0.

r0456[0...2] Encoder configuration supported / Enc config supp

SERVO_S110-DP, SERVO_S110-CAN, SERVO_S110-PN

Can be changed: -	**Calculated:** -	**Access level:** 3
Data type: Unsigned32	**Dyn. index:** -	**Func. diagram:** -
P-Group: Encoder	**Unit group:** -	**Unit selection:** -
Not for motor type: -	**Scaling:** -	**Expert list:** 1
Min	**Max**	**Factory setting**
-	-	-

Description: Contains the encoder configuration supported by the Sensor Module.

Index: [0] = Encoder 1
[1] = Encoder 2
[2] = Reserved

Bit field:

Bit	Signal name	1 signal	0 signal	FP
00	Linear encoder	Yes	No	-
01	Absolute encoder	Yes	No	-
02	Multiturn encoder	Yes	No	-
03	Track A/B sq-wave	Yes	No	-

04	Track A/B sine	Yes	No	-
05	Track C/D	Yes	No	-
06	Hall sensor	Yes	No	-
08	EnDat encoder	Yes	No	-
09	SSI encoder	Yes	No	-
10	DRIVE-CLiQ encoder	Yes	No	-
11	Digital encoder	Yes	No	-
12	Equidistant zero mark	Yes	No	-
13	Irregular zero mark	Yes	No	-
14	Distance-coded zero mark	Yes	No	-
15	Commutation with zero mark (not ASM)	Yes	No	-
16	Acceleration	Yes	No	-
17	Track A/B analog	Yes	No	-
20	Voltage level 5 V	Yes	No	-
21	Voltage level 24 V	Yes	No	-
22	Remote sense (only SMC30)	Yes	No	-
23	Resolver excit	Yes	No	-

Dependency: Refer to: p0404

Note: ZM: Zero mark

This parameter is only used for diagnostics.

A value of zero is displayed if an encoder is not present.

r0458[0...2] Sensor Module properties / SM properties

SERVO_S110-DP, SERVO_S110-CAN, SERVO_S110-PN

Can be changed: -	**Calculated:** -	**Access level:** 3
Data type: Unsigned32	**Dyn. index:** -	**Func. diagram:** 4704
P-Group: Encoder	**Unit group:** -	**Unit selection:** -
Not for motor type: -	**Scaling:** -	**Expert list:** 1
Min	**Max**	**Factory setting**
-	-	-

Description: Sets the Sensor Module configuration.

Index: [0] = Encoder 1
[1] = Encoder 2
[2] = Reserved

Bit field:

Bit	Signal name	1 signal	0 signal	FP
00	Encoder data available	Yes	No	-
01	Motor data available	Yes	No	-
02	Temperature sensor connection available	Yes	No	-
03	Connection for PTC for motor with DRIVE-CLiQ also available	Yes	No	-
04	Module temperature available	Yes	No	-
05	Absolute encoder p0408/p0421 no power of 2	Yes	No	-
06	Sensor Module permits parking/unparking	Yes	No	-
07	Hall sensor can be combined with actual value inversion	Yes	No	-
08	Evaluation through several temperature channels possible	Yes	No	-
09	Encoder fault and its associated information available	Yes	No	-
10	Speed diagnostics in the Sensor Module	Yes	No	-
11	Configuring without park state possible	Yes	No	-
12	Extended functions available	Yes	No	-
13	Extended encoder fault handling	Yes	No	-
14	Extended singleturn/multiturn information available	Yes	No	-
15	Valuation figures available	Yes	No	-
16	Pole position identification	Yes	No	-
17	Burst oversampling	Yes	No	-
18	Continuous oversampling	Yes	No	-
19	Safety position actual value sensing	Yes	No	-
20	Extended speed calculation being used (only SMC30)	Yes	No	-

21	Zero mark tolerance	Yes	No	-
22	Rot pos adapt	Yes	No	-
23	Commutation with zero mark can be de-selected	Yes	No	-
24	Commutation with selected zero mark	Yes	No	-
25	Disconnection of encoder power supply on parking supported	Yes	No	-
26	Parking with temperature evaluation	Yes	No	-
27	SSI position value extrapolation	Yes	No	-
28	Cubic correction	Yes	No	-
29	Phase correction	Yes	No	-
30	Amplitude correction	Yes	No	-
31	Offset correction	Yes	No	-

Dependency: Refer to: p0437, p0600, p0601

Note: A value of zero is displayed if an encoder is not present.

Re bit 11:

When the property is set, the following parameters can be changed without the actual value in the encoder interface becoming invalid (state r0481.14 = 1 "parking encoder active"):

p0314, p0315, p0430, p0431, p0441, p0442, p0443, p0444, p0445

Re bit 12:

The extended functions can be configured using p0437.

Re bit 13:

Encoder faults can be acknowledged via Gn_STW.15.

Re bit 14:

Only for internal Siemens use.

Re bit 23:

When the property is set, commutation with zero mark can be de-selected using p0430.23.

Re bit 24:

If the property is set, commutation to the selected zero mark can be carried out.

r0459[0...2] Sensor Module properties extended / SM prop ext

SERVO_S110-DP, SERVO_S110-CAN, SERVO_S110-PN

Can be changed: -	**Calculated:** -	**Access level:** 3
Data type: Unsigned32	**Dyn. index:** -	**Func. diagram:** -
P-Group: Encoder	**Unit group:** -	**Unit selection:** -
Not for motor type: -	**Scaling:** -	**Expert list:** 1
Min	**Max**	**Factory setting**
-	-	-

Description: Displays the extended properties supported by the Sensor Module.

Index: [0] = Encoder 1
[1] = Encoder 2
[2] = Reserved

Bit field:

Bit	Signal name	1 signal	0 signal	FP
00	Data logger	Yes	No	-
01	Zero mark edge detection	Yes	No	-
02	Correction position actual value XIST1	Yes	No	-
04	Edge evaluation bit 0	Yes	No	-
05	Edge evaluation bit 1	Yes	No	-
06	Freeze the speed actual value for dn/dt errors	Yes	No	-
07	Accumulate uncorrected encoder pulses	Yes	No	-
09	Support function p0426, p0439	Yes	No	-
10	Pulse/direction interface	Yes	No	-
11	Fault handling after PROFIdrive	Yes	No	-
12	Activate additional messages	Yes	No	-
14	Spindle functionality	Yes	No	-
25	Parameter check shift factor Gx_XIST2	Yes	No	-
26	Track monitoring de-selection	Yes	No	-
28	EnDat linear encoder monitoring incremental/absolute	Yes	No	-

29	EnDat encoder initialization with high accuracy	Yes	No	-
31	Analog unipolar track monitoring	Yes	No	-

Dependency: Refer to: p0437

Note: A value of zero is displayed if an encoder is not present.

Re bit 09:

Parameter p0426 or p0439 has been modified. These functions are not supported by the connected Sensor Module.

r0460[0...2] Encoder serial number part 1 / Enc ser_no 1

SERVO_S110-DP, SERVO_S110-CAN, SERVO_S110-PN

Can be changed: -	**Calculated:** -	**Access level:** 3
Data type: Unsigned32	**Dyn. index:** -	**Func. diagram:** -
P-Group: Encoder	**Unit group:** -	**Unit selection:** -
Not for motor type: -	**Scaling:** -	**Expert list:** 1
Min	**Max**	**Factory setting**
-	-	-

Description: Displays the actual serial number part 1 of the appropriate encoder.

Index: [0] = Encoder 1
[1] = Encoder 2
[2] = Reserved

Dependency: Refer to: p0441, p0442, p0443, p0444, p0445, r0461, r0462, r0463, r0464

r0461[0...2] Encoder serial number part 2 / Enc ser_no 2

SERVO_S110-DP, SERVO_S110-CAN, SERVO_S110-PN

Can be changed: -	**Calculated:** -	**Access level:** 3
Data type: Unsigned32	**Dyn. index:** -	**Func. diagram:** -
P-Group: Encoder	**Unit group:** -	**Unit selection:** -
Not for motor type: -	**Scaling:** -	**Expert list:** 1
Min	**Max**	**Factory setting**
-	-	-

Description: Displays the actual serial number part 2 of the appropriate encoder.

Index: [0] = Encoder 1
[1] = Encoder 2
[2] = Reserved

Dependency: Refer to: p0441, p0442, p0443, p0444, p0445, r0460, r0462, r0463, r0464

r0462[0...2] Encoder serial number part 3 / Enc ser_no 3

SERVO_S110-DP, SERVO_S110-CAN, SERVO_S110-PN

Can be changed: -	**Calculated:** -	**Access level:** 3
Data type: Unsigned32	**Dyn. index:** -	**Func. diagram:** -
P-Group: Encoder	**Unit group:** -	**Unit selection:** -
Not for motor type: -	**Scaling:** -	**Expert list:** 1
Min	**Max**	**Factory setting**
-	-	-

Description: Displays the actual serial number part 3 of the appropriate encoder.

Index: [0] = Encoder 1
[1] = Encoder 2
[2] = Reserved

Dependency: Refer to: p0441, p0442, p0443, p0444, p0445, r0460, r0461, r0463, r0464

r0463[0...2] Encoder serial number part 4 / Enc ser_no 4

SERVO_S110-DP, SERVO_S110-CAN, SERVO_S110-PN

Can be changed: -	**Calculated:** -	**Access level:** 3
Data type: Unsigned32	**Dyn. index:** -	**Func. diagram:** -
P-Group: Encoder	**Unit group:** -	**Unit selection:** -
Not for motor type: -	**Scaling:** -	**Expert list:** 1
Min	**Max**	**Factory setting**
-	-	-

Description: Displays the actual serial number part 4 of the appropriate encoder.

Index: [0] = Encoder 1
[1] = Encoder 2
[2] = Reserved

Dependency: Refer to: p0441, p0442, p0443, p0444, p0445, r0460, r0461, r0462, r0464

r0464[0...2] Encoder serial number part 5 / Enc ser_no 5

SERVO_S110-DP, SERVO_S110-CAN, SERVO_S110-PN

Can be changed: -	**Calculated:** -	**Access level:** 3
Data type: Unsigned32	**Dyn. index:** -	**Func. diagram:** -
P-Group: Encoder	**Unit group:** -	**Unit selection:** -
Not for motor type: -	**Scaling:** -	**Expert list:** 1
Min	**Max**	**Factory setting**
-	-	-

Description: Displays the actual serial number part 5 of the appropriate encoder.

Index: [0] = Encoder 1
[1] = Encoder 2
[2] = Reserved

Dependency: Refer to: p0441, p0442, p0443, p0444, p0445, r0460, r0461, r0462, r0463

r0465[0...27] Encoder 1 identification number/serial number / Enc1 ID_no/Ser_no

SERVO_S110-DP, SERVO_S110-CAN, SERVO_S110-PN

Can be changed: -	**Calculated:** -	**Access level:** 3
Data type: Unsigned8	**Dyn. index:** -	**Func. diagram:** -
P-Group: Encoder	**Unit group:** -	**Unit selection:** -
Not for motor type: -	**Scaling:** -	**Expert list:** 1
Min	**Max**	**Factory setting**
-	-	-

Description: Displays the identification/serial number of encoder 1.
Index 0 = first character of the identification number
...
Index x = 20 hex (blank) --> separation between the identification number of serial number
Index x + 1 = 2F hex (slash) --> separation between the identification number of serial number
Index x + 2 = 20 hex (blank) --> separation between the identification number of serial number
Index x + 3 = first character of the serial number
...
Index y with contents = last character of the serial number

Dependency: Refer to: r0460, r0461, r0462, r0463, r0464

Notice: An ASCII table (excerpt) can be found, for example, in the appendix to the List Manual.

Note: The individual characters of the identification number/serial number are available coded as ASCII characters.

r0466[0...27] Encoder 2 identification number/serial number / Enc2 ID_no/Ser_no

SERVO_S110-DP, SERVO_S110-CAN, SERVO_S110-PN

Can be changed: -	**Calculated:** -	**Access level:** 3
Data type: Unsigned8	**Dyn. index:** -	**Func. diagram:** -
P-Group: Encoder	**Unit group:** -	**Unit selection:** -
Not for motor type: -	**Scaling:** -	**Expert list:** 1
Min	**Max**	**Factory setting**
-	-	-

Description: Displays the identification/serial number of encoder 2.
Index 0 = first character of the identification number
...
Index x = 20 hex (blank) --> separation between the identification number of serial number
Index x + 1 = 2F hex (slash) --> separation between the identification number of serial number
Index x + 2 = 20 hex (blank) --> separation between the identification number of serial number
Index x + 3 = first character of the serial number
...
Index y with contents = last character of the serial number

Dependency: Refer to: r0460, r0461, r0462, r0463, r0464

Notice: An ASCII table (excerpt) can be found, for example, in the appendix to the List Manual.

Note: The individual characters of the identification number/serial number are available coded as ASCII characters.

r0470[0...2] Redundant coarse value valid bits / Valid bits

SERVO_S110-DP, SERVO_S110-CAN, SERVO_S110-PN

Can be changed: -	**Calculated:** -	**Access level:** 3
Data type: Unsigned16	**Dyn. index:** -	**Func. diagram:** -
P-Group: Encoder	**Unit group:** -	**Unit selection:** -
Not for motor type: -	**Scaling:** -	**Expert list:** 1
Min	**Max**	**Factory setting**
-	-	-

Description: Displays the valid bits of the redundant coarse position value.

Index: [0] = Encoder 1
[1] = Encoder 2
[2] = Reserved

Dependency: Refer to: p9323, p9523

r0471[0...2] Redundant coarse value fine resolution bits / Fine bit

SERVO_S110-DP, SERVO_S110-CAN, SERVO_S110-PN

Can be changed: -	**Calculated:** -	**Access level:** 3
Data type: Integer16	**Dyn. index:** -	**Func. diagram:** -
P-Group: Encoder	**Unit group:** -	**Unit selection:** -
Not for motor type: -	**Scaling:** -	**Expert list:** 1
Min	**Max**	**Factory setting**
-	-	-

Description: Displays the number of valid bits for the fine resolution of the redundant coarse position value.

Index: [0] = Encoder 1
[1] = Encoder 2
[2] = Reserved

Dependency: Refer to: p9324, p9524

r0472[0...2] Redundant coarse position value relevant bits / Relevant bits

SERVO_S110-DP, SERVO_S110-CAN, SERVO_S110-PN

Can be changed: -	**Calculated:** -	**Access level:** 3
Data type: Unsigned16	**Dyn. index:** -	**Func. diagram:** -
P-Group: Encoder	**Unit group:** -	**Unit selection:** -
Not for motor type: -	**Scaling:** -	**Expert list:** 1
Min	**Max**	**Factory setting**
-	-	-

Description: Displays the number of relevant bits for the redundant coarse position value.

Index: [0] = Encoder 1
[1] = Encoder 2
[2] = Reserved

r0474[0...2] Redundant coarse position value configuration / Red pos config

SERVO_S110-DP, SERVO_S110-CAN, SERVO_S110-PN

Can be changed: -	**Calculated:** -	**Access level:** 3
Data type: Unsigned32	**Dyn. index:** -	**Func. diagram:** -
P-Group: Encoder	**Unit group:** -	**Unit selection:** -
Not for motor type: -	**Scaling:** -	**Expert list:** 1
Min	**Max**	**Factory setting**
-	-	-

Description: Displays the encoder configuration for the redundant coarse position value.

Index: [0] = Encoder 1
[1] = Encoder 2
[2] = Reserved

Bit field:

Bit	Signal name	1 signal	0 signal	FP
00	Incrementer	Yes	No	-
01	Encoder CRC least significant byte first	Yes	No	-
02	Redundant coarse position val. most significant bit left-aligned	Yes	No	-

Dependency: Refer to: p9315, p9515

r0475[0...2] Gx_XIST1 coarse position safe most significant bit / Gx_XIST1 safe MSB

SERVO_S110-DP, SERVO_S110-CAN, SERVO_S110-PN

Can be changed: -	**Calculated:** -	**Access level:** 3
Data type: Unsigned16	**Dyn. index:** -	**Func. diagram:** -
P-Group: Encoder	**Unit group:** -	**Unit selection:** -
Not for motor type: -	**Scaling:** -	**Expert list:** 1
Min	**Max**	**Factory setting**
-	-	-

Description: Displays the bit number for the safe most significant bit (MSB) of the Gx_XIST1 coarse position.

Index: [0] = Encoder 1
[1] = Encoder 2
[2] = Reserved

Note: MSB: Most Significant Bit

r0479[0...2] CO: Diagnostics encoder position actual value Gn_XIST1 / Diag Gn_XIST1

SERVO_S110-DP, SERVO_S110-CAN, SERVO_S110-PN

Can be changed: -	**Calculated:** -	**Access level:** 3
Data type: Integer32	**Dyn. index:** -	**Func. diagram:** 4704
P-Group: Encoder	**Unit group:** -	**Unit selection:** -
Not for motor type: -	**Scaling:** -	**Expert list:** 1
Min	**Max**	**Factory setting**
-	-	-

Description: Displays the encoder actual position value Gn_XIST1 according to PROFIdrive for diagnostics.
In contrast to r0482, the value is updated in each DRIVE-CLiQ basic clock cycle and displayed with sign.

Index: [0] = Encoder 1
[1] = Encoder 2
[2] = Reserved

Caution: Following ramping-up or after a data set changeover, the new value is present at connector inputs which are interconnected to connector output r0479 and under certain circumstances take 100 ms to become available.

Reason:

These interconnections are updated in the background, unlike interconnections involving other connector outputs (e.g. CO: r0482).

The value is immediately available when non-cyclically reading r0479 (e.g. via the expert list).

p0480[0...2] CI: Signal source for encoder control word Gn_STW / Enc S_src Gn_STW

SERVO_S110-DP, SERVO_S110-CAN, SERVO_S110-PN

Can be changed: T	**Calculated:** -	**Access level:** 3
Data type: Unsigned32 / Integer16	**Dyn. index:** -	**Func. diagram:** 1580, 4720
P-Group: Encoder	**Unit group:** -	**Unit selection:** -
Not for motor type: -	**Scaling:** -	**Expert list:** 1
Min	**Max**	**Factory setting**
-	-	0

Description: Sets the signal source for the encoder control word Gn_STW according to PROFIdrive.

Index: [0] = Encoder 1
[1] = Encoder 2
[2] = Reserved

Note: When the function module "basic positioner" (r0108.4 = 1) is activated, the following BICO interconnection is established:

CI: p0480[0] = r2520[0], CI: p0480[1] = r2520[1] and CI: p0480[2] = r2520[2]

r0481[0...2] CO: Encoder status word Gn_ZSW / Enc Gn_ZSW

SERVO_S110-DP, SERVO_S110-CAN, SERVO_S110-PN

Can be changed: -	**Calculated:** -	**Access level:** 3
Data type: Unsigned16	**Dyn. index:** -	**Func. diagram:** 4010, 4704, 4730
P-Group: Encoder	**Unit group:** -	**Unit selection:** -
Not for motor type: -	**Scaling:** -	**Expert list:** 1
Min	**Max**	**Factory setting**
-	-	-

Description: Displays the encoder status word Gn_ZSW according to PROFIdrive.

Index: [0] = Encoder 1
[1] = Encoder 2
[2] = Reserved

Bit field:

Bit	Signal name	1 signal	0 signal	FP
00	Function 1 active	Yes	No	-
01	Function 2 active	Yes	No	-
02	Function 3 active	Yes	No	-
03	Function 4 active	Yes	No	-
04	Value 1	Displayed in r0483	Not present	-
05	Value 2	Displayed in r0483	Not present	-
06	Value 3	Displayed in r0483	Not present	-
07	Value 4	Displayed in r0483	Not present	-
08	Measuring probe 1 deflected	Yes	No	-
09	Measuring probe 2 deflected	Yes	No	-
11	Encoder fault acknowledge active	Yes	No	9676
13	Absolute value cyclically	Displayed in r0483	No	-
14	Parking encoder active	Yes	No	-
15	Encoder fault	Displayed in r0483	None	-

Notice: Information on Gn_STW/Gn_ZSW can, e.g. be found in the following literature:

SINAMICS S120 Function Manual Drive Functions

Note: Re bit 14:
Displays the acknowledgement for "activate parking encoder" (Gn_STW.14 = 1) or encoder position actual value (Gn_XIST1) invalid.
Re bit 14, 15:
r0481.14 = 1 and r0481.15 = 0 can have one of the following causes:
- the encoder is parked.
- the encoder is de-activated.
- the encoder is being commissioned.
- no parameterized encoder available.
- encoder data set is being changed over.
r0481.14 = 1 and r0481.15 = 1 has the following significance:
An encoder error has occurred and the encoder position actual value (Gn_XIST1) is invalid.

r0482[0...2] CO: Encoder actual position value Gn_XIST1 / Enc Gn_XIST1

SERVO_S110-DP, SERVO_S110-CAN, SERVO_S110-PN

Can be changed: -	**Calculated:** -	**Access level:** 3
Data type: Unsigned32	**Dyn. index:** -	**Func. diagram:** 1580, 2450, 4010, 4704, 4735, 4740
P-Group: Encoder	**Unit group:** -	**Unit selection:** -
Not for motor type: -	**Scaling:** -	**Expert list:** 1
Min	**Max**	**Factory setting**
-	-	-

Description: Displays the encoder actual position value Gn_XIST1 according to PROFIdrive.
Index: [0] = Encoder 1
[1] = Encoder 2
[2] = Reserved
Note: - this value is reset if necessary when the "parking encoder" (r0481.14) function is de-selected.
- in this value, the measuring gear (p0432, p0433) is only taken into account when the position tracking is activated (p0411.0 = 1).

r0483[0...2] CO: Encoder actual position value Gn_XIST2 / Enc Gn_XIST2

SERVO_S110-DP, SERVO_S110-CAN, SERVO_S110-PN

Can be changed: -	**Calculated:** -	**Access level:** 3
Data type: Unsigned32	**Dyn. index:** -	**Func. diagram:** 1580, 2450, 4010, 4704
P-Group: Encoder	**Unit group:** -	**Unit selection:** -
Not for motor type: -	**Scaling:** -	**Expert list:** 1
Min	**Max**	**Factory setting**
-	-	-

Description: Displays the encoder actual position value Gn_XIST2 according to PROFIdrive.
Recommendation: Possible causes of the error codes:
Error code 4097 and 4098: Defective Control Unit hardware.
Error codes 4099 and 4100: Too many measuring pulses have occurred.
Index: [0] = Encoder 1
[1] = Encoder 2
[2] = Reserved
Notice: The encoder position actual value must be requested using the encoder control word Gn_STW.13.
Note: - in this value, the measuring gear (p0432, p0433) is only taken into account when the position tracking is activated (p0411.0 = 1).
- if GxZSW.15 = 1 (r0481), then an error code with the following significance is located in Gx_XIST2 (r0483):
1: Encoder fault.
2: Possible position shift in Gx_XIST1.
3: Encoder parking not possible.
4: Abort, reference mark search.
5: Abort, retrieve reference value.
6: Abort, flying measurement.
7: Abort, retrieve measured value.

8: Abort, absolute value transfer.
3841: Function not supported.
4097: Abort, reference mark search due to an initialization error.
4098: Abort, flying measurement due to an initialization error.
4099: Abort, reference mark search due to a measuring error.
4100: Abort, flying measurement due to a measuring error.

r0484[0...2] CO: Redundant coarse encoder position + CRC Gn_XIST1 / Enc red pos+CRC

SERVO_S110-DP, SERVO_S110-CAN, SERVO_S110-PN

Can be changed: -	**Calculated:** -	**Access level:** 3
Data type: Unsigned32	**Dyn. index:** -	**Func. diagram:** -
P-Group: Encoder	**Unit group:** -	**Unit selection:** -
Not for motor type: -	**Scaling:** -	**Expert list:** 1
Min	**Max**	**Factory setting**
-	-	-

Description: Displays the redundant coarse encoder position including CRC (Cyclic Redundancy Check).
Upper 16 bits:
CRC over the redundant coarse encoder position.
Lower 16 bits:
Redundant coarse encoder position.
On an SMx Sensor Module, the encoder coarse position count direction is opposite to r0482 (encoder actual value Gn_XIST1). The value contains 2 bit fine resolution.
With a DRIVE-CLiQ encoder, the encoder coarse position count direction is the same as r0482. The encoder coarse position contains 9 valid bits and no bits for fine resolution.

Index: [0] = Encoder 1
[1] = Encoder 2
[2] = Reserved

Dependency: The values are valid when the safety position actual value sensing is activated (p0430.19 = 1).
Refer to: p0430

Note: This absolute value does not change, contrary to r0482, when de-selecting the function "parking axis".

r0487[0...2] Diagnostic encoder control word Gn_STW / Enc Gn_STW

SERVO_S110-DP, SERVO_S110-CAN, SERVO_S110-PN

Can be changed: -	**Calculated:** -	**Access level:** 3
Data type: Unsigned16	**Dyn. index:** -	**Func. diagram:** 1580, 4704, 4720, 4740
P-Group: Encoder	**Unit group:** -	**Unit selection:** -
Not for motor type: -	**Scaling:** -	**Expert list:** 1
Min	**Max**	**Factory setting**
-	-	-

Description: Displays the encoder control word Gn_STW according to PROFIdrive for diagnostics.

Index: [0] = Encoder 1
[1] = Encoder 2
[2] = Reserved

Bit field:

Bit	Signal name	1 signal	0 signal	FP
00	Request function 1	Yes	No	-
01	Request function 2	Yes	No	-
02	Request function 3	Yes	No	-
03	Request function 4	Yes	No	-
04	Request command bit 0	Yes	No	-
05	Request command bit 1	Yes	No	-
06	Request command bit 2	Yes	No	-
07	Flying measurement mode/search for reference mark	Flying measurement	Reference marks	-
13	Request absolute value cyclic	Yes	No	-
14	Request parking encoder	Yes	No	-
15	Request acknowledge encoder fault	Yes	No	-

Notice: Information on Gn_STW/Gn_ZSW should be taken from the corresponding product documentation.

Note: The signal source for the encoder control word is set with p0480.

p0488[0...2] Measuring probe 1 input terminal / Meas probe 1 inp

SERVO_S110-DP, SERVO_S110-CAN, SERVO_S110-PN

Can be changed: U, T	**Calculated:** -	**Access level:** 3
Data type: Integer16	**Dyn. index:** -	**Func. diagram:** 4740
P-Group: Encoder	**Unit group:** -	**Unit selection:** -
Not for motor type: -	**Scaling:** -	**Expert list:** 1
Min	**Max**	**Factory setting**
0	7	0

Description: Sets the input terminal to connect probe 1.

Value:
0: No meas probe
1: DI/DO 9 (X132.2)
2: DI/DO 10 (X132.3)
3: DI/DO 11 (X132.4)
7: DI/DO 8 (X132.1)

Index:
[0] = Encoder 1
[1] = Encoder 2
[2] = Reserved

Dependency: Refer to: p0489, p0490, p0728

Note: DI/DO: Bidirectional Digital Input/Output
The terminal must be set as input (p0728).
Refer to the encoder interface for PROFIdrive.
If parameterization is rejected, check whether the terminal is already being used in p0580, p0680, p2517 or p2518.

p0489[0...2] Measuring probe 2 input terminal / Meas probe 2 inp

SERVO_S110-DP, SERVO_S110-CAN, SERVO_S110-PN

Can be changed: U, T	**Calculated:** -	**Access level:** 3
Data type: Integer16	**Dyn. index:** -	**Func. diagram:** 4740
P-Group: Encoder	**Unit group:** -	**Unit selection:** -
Not for motor type: -	**Scaling:** -	**Expert list:** 1
Min	**Max**	**Factory setting**
0	7	0

Description: Sets the input terminal to connect probe 2.

Value:
0: No meas probe
1: DI/DO 9 (X132.2)
2: DI/DO 10 (X132.3)
3: DI/DO 11 (X132.4)
7: DI/DO 8 (X132.1)

Index:
[0] = Encoder 1
[1] = Encoder 2
[2] = Reserved

Dependency: Refer to: p0488, p0490, p0728

Note: DI/DO: Bidirectional Digital Input/Output
The terminal must be set as input (p0728).
Refer to the encoder interface for PROFIdrive.
If parameterization is rejected, check whether the terminal is already being used in p0580, p0680, p2517 or p2518.

p0490 Invert measuring probe or equivalent zero mark / Pr or ZM_equiv inv

CU_S110-DP, CU_S110-CAN, CU_S110-PN

Can be changed: U, T	**Calculated:** -	**Access level:** 3
Data type: Unsigned32	**Dyn. index:** -	**Func. diagram:** 4735, 4740
P-Group: Encoder	**Unit group:** -	**Unit selection:** -
Not for motor type: -	**Scaling:** -	**Expert list:** 1
Min	**Max**	**Factory setting**
-	-	0000 0000 0000 0000 bin

Description: Setting to invert the digital input signals to connect a measuring probe or an equivalent zero mark.

Bit field:

Bit	Signal name	1 signal	0 signal	FP
08	DI/DO 8 (X132.1)	Inverted	Not inverted	-
09	DI/DO 9 (X132.2)	Inverted	Not inverted	-

10	DI/DO 10 (X132.3)	Inverted	Not inverted	-
11	DI/DO 11 (X132.4)	Inverted	Not inverted	-

Dependency: Refer to: p0488, p0489, p0493, p0495, p0728

Note: The terminal must be set as input.

When the measuring probe or the equivalent zero mark is inverted, this has no effect on the status displays of the digital inputs (r0721, r0722, r0723).

DI/DO: Bidirectional Digital Input/Output

p0491 Motor encoder fault response ENCODER / Fault resp ENCODER

SERVO_S110-DP, SERVO_S110-CAN, SERVO_S110-PN

Can be changed: T	**Calculated:** -	**Access level:** 3
Data type: Integer16	**Dyn. index:** -	**Func. diagram:** -
P-Group: Encoder	**Unit group:** -	**Unit selection:** -
Not for motor type: -	**Scaling:** -	**Expert list:** 1
Min	**Max**	**Factory setting**
0	5	0

Description: Sets the behavior for the ENCODER fault response (motor encoder).

This means, for example, if an encoder fault occurs, encoderless operation can be automatically selected with a shutdown behavior that can be selected.

Value:
0: Encoder fault results in OFF2
1: Enc fault results in encoderless oper. and oper. continues
2: Encoder fault results in encoderless operation and OFF1
3: Encoder fault results in encoderless operation and OFF3
4: Encoder fault results in DC braking
5: Enc fault results in encoderless op, operation continues, alarm

Dependency: The following parameters are relevant for encoderless operation.

Refer to: p0341, p0342, p1470, p1472, p1517, p1612, p1755

Refer to: F07575

Caution:

For a value = 1, 2, 3, 5 the following applies:

- encoderless operation must have been started.
- if, for synchronous motors, an encoder fault occurs below the switchover speed p1755, when switching over to encoderless operation, the motor can stall.

For a value = 1, 5 the following applies:

- in spite of the motor encoder fault that has occurred, the motor continues to operate.

Note: For a value = 1, 2, 3, the following applies:

- for encoderless operation the following condition must be fulfilled: p1800 >= n / (2 * p0115[0]), n = 1, 2, etc.
- Refer to the status signal "encoderless operation due to a fault" (BO: r1407.13).
- If, when setting r1407.13, a different drive data set is selected (e.g. interconnection from p0820), then the open-loop or closed-loop control type p1300 of this data set must match that of the original data set (e.g. p1300 = 21). Encoderless closed-loop controlled operation is kept when changing over.

For a value = 4, the following applies:

- the value can only be set for all motor data sets when p1231 = 4
- the function is not supported on synchronous motors
- For induction motors, DC braking is initiated on an encoder fault. DC braking must be commissioned (p1232, p1233, p1234).

p0492 Square-wave encoder maximum speed difference per sampling cycle / n_dif max/samp_cyc

SERVO_S110-DP, SERVO_S110-CAN, SERVO_S110-PN

Can be changed: U, T	**Calculated:** CALC_MOD_REG	**Access level:** 3
Data type: FloatingPoint32	**Dyn. index:** -	**Func. diagram:** -
P-Group: Encoder	**Unit group:** -	**Unit selection:** -
Not for motor type: -	**Scaling:** -	**Expert list:** 1
Min	**Max**	**Factory setting**
0.00 [rpm]	210000.00 [rpm]	0.00 [rpm]

Description: Sets the maximum permissible speed difference within the current controller sampling time for squarewave encoders.

When the value is exceeded, depending on p0491, either encoderless closed-loop speed/torque control is selected or the drive is powered down.

Dependency: Refer to: F31118, A31418, F32118, A32418

Note: For a value of 0.0, the speed change monitoring is disabled.

if the set maximum speed difference is only exceeded for one sampling time of the current controller, then an appropriate alarm is output. However, if the maximum speed difference is exceeded over several sampling times, then a corresponding fault is output.

p0493[0...n] Zero mark selection input terminal / ZM_sel inp_term

SERVO_S110-DP, SERVO_S110-CAN, SERVO_S110-PN

Can be changed: U, T	**Calculated:** -	**Access level:** 3
Data type: Integer16	**Dyn. index:** EDS, p0140	**Func. diagram:** -
P-Group: Encoder	**Unit group:** -	**Unit selection:** -
Not for motor type: -	**Scaling:** -	**Expert list:** 1
Min	**Max**	**Factory setting**
0	7	0

Description: Sets the input terminal for selecting the reference mark via BERO/switching signal when performing referencing with several zero marks.

The encoder interface supplies the position of the reference mark, which was detected immediately after the positive edge of the BERO signal.

Value:
0: No selection via BERO
1: DI/DO 9 (X132.2)
2: DI/DO 10 (X132.3)
3: DI/DO 11 (X132.4)
7: DI/DO 8 (X132.1)

Dependency: Refer to: p0490

Notice: For CU310, CX32, NX10 and NX15, only DI/DO 9, 10, 11 can be selected as fast inputs (refer to the Equipment Manual).

Note: Refer to the encoder interface for PROFIdrive.

The terminal must be set as input (p0728).

For p0493 = 0 (factory setting) the following applies:

- there is no logic operation between the reference mark search and an input signal.

For p0493 > 0, the following applies:

- the positive edge of the input signal is evaluated. If the negative edge is to be evaluated, signal inversion must be parameterized via p0490.
- if a parameter change is rejected, a check should be performed as to whether the input terminal is already being used in p0580, p0680, p2517, or p2518.

p0494[0...n] Equivalent zero mark input terminal / ZM_equiv input

SERVO_S110-DP, SERVO_S110-CAN, SERVO_S110-PN

Can be changed: U, T	**Calculated:** -	**Access level:** 3
Data type: Integer16	**Dyn. index:** EDS, p0140	**Func. diagram:** -
P-Group: Encoder	**Unit group:** -	**Unit selection:** -
Not for motor type: -	**Scaling:** -	**Expert list:** 1
Min	**Max**	**Factory setting**
0	7	0

Description: Selects the input terminal for connecting an equivalent zero mark (external encoder zero mark).

Value:
0: No equivalent zero mark (evaluation of the encoder zero mark)
1: DI/DO 9 (X132.2)
2: DI/DO 10 (X132.3)
3: DI/DO 11 (X132.4)
7: DI/DO 8 (X132.1)

Dependency: Refer to: p0490

Notice: For p0494 = 0 (factory setting), the setting in p0495 is effective.

Note: Refer to the encoder interface for PROFIdrive.

The terminal must be set as input.

p0495[0...2] Equivalent zero mark input terminal / ZM_equiv input

SERVO_S110-DP, SERVO_S110-CAN, SERVO_S110-PN

Can be changed: U, T	**Calculated:** -	**Access level:** 3
Data type: Integer16	**Dyn. index:** -	**Func. diagram:** 4735
P-Group: Encoder	**Unit group:** -	**Unit selection:** -
Not for motor type: -	**Scaling:** -	**Expert list:** 1
Min	**Max**	**Factory setting**
0	7	0

Description: Selects the input terminal for connecting an equivalent zero mark (external encoder zero mark).

Value:
0: No equivalent zero mark (evaluation of the encoder zero mark)
1: DI/DO 9 (X132.2)
2: DI/DO 10 (X132.3)
3: DI/DO 11 (X132.4)
7: DI/DO 8 (X132.1)

Index:
[0] = Encoder 1
[1] = Encoder 2
[2] = Reserved

Dependency: Refer to: p0490, p0494

Notice: For p0494 > 0, the setting in p0494 and p0495 is invalid.

Note:
Refer to the encoder interface for PROFIdrive.

The terminal must be set as input.

For p0495 = 0 (factory setting), the encoder zero mark is evaluated as zero mark.

For p0495 > 0, the following applies:

Depending on the direction of motion, the positive or negative edge at the appropriate input is evaluated.

- increasing position actual values (r0482) --> the 0/1 edge is evaluated.

- decreasing position actual values (r0482) --> the 1/0 edge is evaluated.

Only one zero mark is supported. If function 2, 3 or 4 is selected, this results in a fault message in Gn_ZSW.

The inversion of the inputs via p0490 affects the function "referencing with equivalent zero mark". This is the reason that the edge evaluation is interchanged as a function of the direction of motion.

An input can only be assigned to one encoder as measuring probe 1, 2 or equivalent zero mark. Exception: The same encoder can be simultaneously used as measuring probe and equivalent zero mark as both functions cannot be simultaneously requested.

p0496[0...2] Encoder diagnostic signal selection / Enc diag select

SERVO_S110-DP, SERVO_S110-CAN, SERVO_S110-PN

Can be changed: U, T	**Calculated:** -	**Access level:** 4
Data type: Integer16	**Dyn. index:** -	**Func. diagram:** -
P-Group: Encoder	**Unit group:** -	**Unit selection:** -
Not for motor type: -	**Scaling:** -	**Expert list:** 1
Min	**Max**	**Factory setting**
0	86	0

Description: Selects the trace signal to be output in r0497, r0498 and r0499 for encoder diagnostics.

Value:
0: Inactive
1: r0497: Mechanical revolution
10: r0498: Raw value track A, r0499: Raw value track B
11: r0498: Fine position X (-A/2), r0499: Fine position Y (-B/2)
12: r0498: Fine position Phi, r0499: -
13: r0498: Offset correction X, r0499: Offset correction Y
14: r0498: Phase correction X, r0499: Amplitude correction Y
15: r0498: Cubic correction X, r0499: Fine position X
16: r0498: oversampling channel A, r0499: oversampling channel B
17: r0498: fan-out amount, r0499: fan-out number
18: r0498: Oversampling angle, r0499: Oversampling amount
20: r0498: Raw value track C, r0499: Raw value track D
21: r0498: CD position X (-D/2), r0499: CD position Y (C/2)
22: r0498: CD position Phi, r0499: CD pos. Phi - mech. revolution
23: r0497: Zero mark status
24: r0498: Raw value track R, r0499: Zero mark status
25: r0498: Raw value track A, r0499: Raw value track R

30: r0497: Absolute position serial
31: r0497: Absolute position incremental
32: r0497: Zero mark position
33: r0497: Correction absolute position difference
40: r0498: Raw temperature, r0499: Temperature in 0.1 °C
41: r0498: Resistance in 0.1 Ohm, r0499: Temperature in 0.1 °C
42: r0497: Resistance 2500 Ohm
51: r0497: Absolute speed difference (dn/dt)
52: r0497: Xact1 corrected quadrants
60: Analog sensor: r0498: raw val chann. A, r0499: raw val chann. B
61: Analog sensor: r0498: fine pos chann. A,r0499: fine pos chann. B
62: Analog sensor: r0498: Fine pos before characteristic, r0499: -
70: Resolver: r0498: Transformation ratio, r0499: phase
80: Spindle: r0498: Sensor S1 (raw), r0499: Sensor S4 (raw)
81: Spindle: r0498: Sensor S5 (raw), r0499: -
85: Spindle: r0498: Sensor S1 (cal), r0499: Sensor S4 (cal)
86: Spindle: r0498: Sensor S5 (cal), r0499: -

Index: [0] = Encoder 1
[1] = Encoder 2
[2] = Reserved

Dependency: Refer to: r0497, r0498, r0499

Notice: The setting option depends on the following properties:

Sensor Module type, hardware version, firmware version (Sensor Module and Control Units), order number (last digit).

Not all combinations are supported.

Note: Re p0496 = 1: 360 ° <--> 2^32

Re p0496 = 10 (resolver): 2900 mV <--> 26214 dec

Re p0496 = 10, 20 (sin/cos 1 Vpp, EnDat): 500 mV <--> 21299 dec

Re p0496 = 11 (resolver): 2900 mV <--> 13107 dec, internal processor offset is corrected

Re p0496 = 11, 21 (sin/cos 1 Vpp, EnDat): 500 mV <--> 10650 dec, internal processor offset is corrected

Re p0496 = 12: 180 ° fine position <--> 32768 dec

Re p0496 = 13 (resolver): 2900 mV <--> 13107 dec

Re p0496 = 13 (sin/cos 1 Vpp, EnDat): 500 mV <--> 10650 dec

Re p0496 = 14: 1 ° <--> 286 dec, 100% <--> 16384 dec

Re p0496 = 15: 100 % <--> 16384 dec

Re p0496 = 16: (resolver): channel A: 2900 mV <--> 26214 dec, channel B: 2900 mV <--> 26214 dec

Re p0496 = 16: (sin/cos 1 Vpp, EnDat) channel A: 500 mV <--> 21299 dec, channel B: 500 mV <--> 21299 dec

Re p0496 = 17 (resolver): absolute value: 2900 mV <--> 13107 dec, number: 1 ... 8

Re p0496 = 17 (sin/cos 1 Vpp, EnDat): absolute value 500 mV <--> 10650 dec, number: 1 ... 8

Re p0496 = 18 (resolver): angle: signal period <--> 2^16, absolute value: 2900 mV <--> 13107 dec

Re p0496 = 18 (sin/cos 1 Vpp, EnDat): angle: signal period <--> 2^16, absolute value: 500 mV <--> 10650 dec

Re p0496 = 22: 180 ° <--> 32768 dec

Re p0496 = 23, 24: r0497.31 (r0499.15) set for at least 1 current controller cycle when encoder zero mark detected

Re p0496 = 24, 25: 500 mV <--> 21299 dec

Re p0496 = 30: Rotary: 1 singleturn measuring step <--> 1 dec, linear: 1 measuring step <--> 1 dec

Re p0496 = 31: Absolute position, incremental in 1/4 encoder pulses

Re p0496 = 32: Zero mark position in 1/4 encoder pulses

Re p0496 = 33: counter offset absolute value in 1/4 encoder pulses

Re p0496 = 40: r0498 <--> (R_KTY/1 kOhm - 0.9) * 32768

Re p0496 = 42: 2500 Ohm <--> 2^32

Re p0496 = 51: 1 rpm <--> 1000 dec

Re p0496 = 52: In 1/4 encoder pulses

Re p0496 = 60: voltage, channel A in mV, voltage, channel B in mV

Re p0496 = 61: Channel A: encoder periods <--> 2^16, channel B: encoder periods <--> 2^16

Re p0496 = 62: encoder periods <--> 2^16

Re p0496 = 70: r: 100% <--> 10000 dec, phase: 180 ° <--> 18000 dec

Re p0496 = 80, 81, 85, 86: 1V <--> 1000 inc

r0497[0...2] CO: Encoder diagnostic signal double word / Enc diag DW

SERVO_S110-DP, SERVO_S110-CAN, SERVO_S110-PN

Can be changed: -	**Calculated:** -	**Access level:** 4
Data type: Unsigned32	**Dyn. index:** -	**Func. diagram:** -
P-Group: Encoder	**Unit group:** -	**Unit selection:** -
Not for motor type: -	**Scaling:** -	**Expert list:** 1
Min	**Max**	**Factory setting**
-	-	-

Description: Displays the trace signal for encoder diagnostics (double word).
The signal to be output is selected in p0496.

Index: [0] = Encoder 1
[1] = Encoder 2
[2] = Reserved

Dependency: Refer to: p0496, r0498, r0499

r0498[0...2] CO: Encoder diagnostic signal low word / Enc diag low word

SERVO_S110-DP, SERVO_S110-CAN, SERVO_S110-PN

Can be changed: -	**Calculated:** -	**Access level:** 4
Data type: Integer16	**Dyn. index:** -	**Func. diagram:** -
P-Group: Encoder	**Unit group:** -	**Unit selection:** -
Not for motor type: -	**Scaling:** -	**Expert list:** 1
Min	**Max**	**Factory setting**
-	-	-

Description: Displays the trace signal for encoder diagnostics (low component).
The signal to be output is selected in p0496.

Index: [0] = Encoder 1
[1] = Encoder 2
[2] = Reserved

Dependency: Refer to: p0496, r0497, r0499

r0499[0...2] CO: Encoder diagnostic signal high word / Enc diag high word

SERVO_S110-DP, SERVO_S110-CAN, SERVO_S110-PN

Can be changed: -	**Calculated:** -	**Access level:** 4
Data type: Integer16	**Dyn. index:** -	**Func. diagram:** -
P-Group: Encoder	**Unit group:** -	**Unit selection:** -
Not for motor type: -	**Scaling:** -	**Expert list:** 1
Min	**Max**	**Factory setting**
-	-	-

Description: Displays the trace signal for encoder diagnostics (high component).
The signal to be output is selected in p0496.

Index: [0] = Encoder 1
[1] = Encoder 2
[2] = Reserved

Dependency: Refer to: p0496, r0497, r0498

p0500 Technology application / Tec application

SERVO_S110-DP, SERVO_S110-CAN, SERVO_S110-PN

Can be changed: C2(1, 5), T	**Calculated:** -	**Access level:** 2
Data type: Integer16	**Dyn. index:** -	**Func. diagram:** -
P-Group: Applications	**Unit group:** -	**Unit selection:** -
Not for motor type: -	**Scaling:** -	**Expert list:** 1
Min	**Max**	**Factory setting**
100	102	100

Description: Sets the technology application.
The parameter influences the calculation of open-loop and closed-loop control parameters that is e.g. initiated using p0578.

Value:
100: Standard drive (SERVO)
101: Feed drive (limit current limitation)
102: Spindle drive (rated current limitation)

Dependency: Refer to: p1520, p1521, p1530, p1531, p2000, p2175, p2177

Caution: After changing over the technological application and then calculating the open-loop and closed-loop parameters, the behavior of the motor can have changed very significantly (e.g. the same setpoint results in a higher speed due to a different reference speed). For this reason extreme caution must be taken when the motor is started for the first time.

Note: The calculation of parameters dependent on the technology application can be called up as follows:
- when exiting quick commissioning using p3900 > 0
- when writing p0340 = 1, 3, 5
- when writing p0578 = 1

For p0500 = 100 and when the calculation is initiated, the following parameters are set:
- p1520/p1521 = rated motor torque (r0333)
- p1530/p1531= 2*pi*r0333*p0311 (rotary) or r0333*p0311 (linear)
- p2000 = rated motor speed (p0311)
- p2175 = factory setting
- p2177 = factory setting

For p0500 = 101 and when the calculation is initiated, the following parameters are set:
- p1520/p1521 = torque at the maximum motor current (p0323)
- p1530/p1531= power at the maximum motor current (p0323) and rated motor speed (p0311)
- p2000 = rated motor speed (p0311)
- p2175 = maximum value
- p2177 = 0.2 s

For p0500 = 102 and when the calculation is initiated, the following parameters are set:
- p1520/p1521 = rated motor torque (r0333)
- p1530/p1531= 2*pi*r0333*p0311 (rotary) or r0333*p0311 (linear)
- p2000 = maximum motor speed (p0322) if p0322 is not equal to 0, otherwise rated motor speed (p0311)
- p2175 = factory setting
- p2177 = factory setting

p0505 Selecting the system of units / Unit sys select

SERVO_S110-DP, SERVO_S110-CAN, SERVO_S110-PN

Can be changed: C2(5)	**Calculated:** -	**Access level:** 1
Data type: Integer16	**Dyn. index:** -	**Func. diagram:** -
P-Group: Applications	**Unit group:** -	**Unit selection:** -
Not for motor type: -	**Scaling:** -	**Expert list:** 1
Min	**Max**	**Factory setting**
1	4	1

Description: Adjustable parameter of the actual system of units.

Value:
1: SI system of units
2: System of units referred/SI
3: US system of units
4: System of units referred/US

Dependency: The parameter cannot be changed if the master control was fetched.

Caution: If a per unit representation is selected and if the reference parameters (e.g. p2000) are subsequently changed, then the physical significance of several control parameters is also adapted at the same time. As a consequence, the control behavior can change (see p1576, p1621, p1744, p1752, p1755 and p1609, p1612, p1619, p1620).

Note: Reference parameter for the unit system % are, for example, p2000 ... p2004. Depending on what has been selected, these are displayed using either SI or US units.

p0528 Controller gain system of units / Ctrl_gain unit_sys

SERVO_S110-DP, SERVO_S110-CAN, SERVO_S110-PN

Can be changed: C2(5)	**Calculated:** -	**Access level:** 4
Data type: Integer16	**Dyn. index:** -	**Func. diagram:** -
P-Group: Applications	**Unit group:** -	**Unit selection:** -
Not for motor type: -	**Scaling:** -	**Expert list:** 1
Min	**Max**	**Factory setting**
0	1	0

Description: Sets the system of units for the controller gains.

Value:
0: Representation physical/% (p0505)
1: Representation no dimensions (referred)

Note:
For p0528 = 0 (physical/%), the following applies:
Using p0505, the dependent parameters can be changed over between physical and % representation.
For SERVO (r0107) the following applies:
The parameter is pre-assigned a value of 0 and cannot be changed.

p0530[0...n] Bearing type selection / Bearing type sel

SERVO_S110-DP, SERVO_S110-CAN, SERVO_S110-PN

Can be changed: C2(1, 3)	**Calculated:** -	**Access level:** 1
Data type: Unsigned16	**Dyn. index:** MDS, p0130	**Func. diagram:** -
P-Group: Motor	**Unit group:** -	**Unit selection:** -
Not for motor type: FEM	**Scaling:** -	**Expert list:** 1
Min	**Max**	**Factory setting**
0	104	0

Description: Sets the bearing type.
0 = No selection
1 = Manual entry
101 = STANDARD
102 = PERFORMANCE
103 = HIGH PERFORMANCE
104 = ADVANCED LIFETIME
If the bearing type changes the bearing code number (p0531) is pre-assigned accordingly.

Dependency: Refer to: p0301, p0531, p1082

Caution: If a valid bearing type (p0530) is entered, the parameters in the bearing list cannot be changed (write protection). Write protection is canceled if bearing type 1 is entered.

Notice: If p0530 is changed during quick commissioning (p0010 = 1), then the maximum speed p1082, which is also associated with quick commissioning, is pre-assigned appropriately. This is not the case when commissioning the motor (p0010 = 3). The maximum speed of the bearing is factored into the limit for the maximum speed p1082.

Note: For a motor with DRIVE-CLiQ, p0530 can only be changed to the value 1 (manual entry).

p0531[0...n] Bearing code number selection / Bear. code no sel

SERVO_S110-DP, SERVO_S110-CAN, SERVO_S110-PN

Can be changed: C2(3)	**Calculated:** -	**Access level:** 1
Data type: Unsigned16	**Dyn. index:** MDS, p0130	**Func. diagram:** -
P-Group: Motor	**Unit group:** -	**Unit selection:** -
Not for motor type: FEM	**Scaling:** -	**Expert list:** 1
Min	**Max**	**Factory setting**
0	65535	0

Description: Display and setting the bearing code number.
It is pre-assigned automatically (from the parameter lists which are available internally) when p0301 and p0530 are entered and cannot be changed (write protection). The information in p0530 should be observed when removing write protection.
When changing the bearing code number (except in the case of changing the value to 0), all of the bearing parameters are pre-assigned from the parameter lists which are available internally.

Dependency: Refer to: p0301, p0530, p1082

Notice: If p0531 is changed during quick commissioning (p0010 = 1), then the maximum speed p1082, which is also associated with quick commissioning, is pre-assigned appropriately. This is not the case when commissioning the motor (p0010 = 3). The maximum speed of the bearing is factored into the limit for the maximum speed p1082.

Note: p0531 cannot be changed on a motor with DRIVE-CLiQ.

p0532[0...n] Bearing maximum speed / Bearing n_max

SERVO_S110-DP, SERVO_S110-CAN, SERVO_S110-PN

Can be changed: C2(1, 3)	**Calculated:** -	**Access level:** 1
Data type: FloatingPoint32	**Dyn. index:** MDS, p0130	**Func. diagram:** -
P-Group: Motor	**Unit group:** -	**Unit selection:** -
Not for motor type: FEM	**Scaling:** -	**Expert list:** 1
Min	**Max**	**Factory setting**
0.0 [rpm]	210000.0 [rpm]	0.0 [rpm]

Description: Sets the maximum speed for the bearing.

Dependency: Refer to: p1082

Caution: This parameter is pre-assigned in the case of motors from the motor list (p0301) if a bearing type (p0530) or a bearing code (p0531) is selected. When selecting a catalog motor, this parameter cannot be changed (write protection). The information in p0530 should be observed when removing write protection.

Notice: If p0532 is changed during quick commissioning (p0010 = 1), then the maximum speed p1082, which is also associated with quick commissioning, is pre-assigned appropriately. This is not the case when commissioning the motor (p0010 = 3). The maximum speed of the bearing is factored into the limit for the maximum speed p1082.

p0570 Inhibit list values effective number / Inhib list no

SERVO_S110-DP, SERVO_S110-CAN, SERVO_S110-PN

Can be changed: U, T	**Calculated:** -	**Access level:** 2
Data type: Unsigned8	**Dyn. index:** -	**Func. diagram:** -
P-Group: Applications	**Unit group:** -	**Unit selection:** -
Not for motor type: -	**Scaling:** -	**Expert list:** 1
Min	**Max**	**Factory setting**
0	50	0

Description: Sets the number of parameters in the inhibit list p0571 that should be withdrawn from the automatic motor and closed-loop control parameter calculation (refer to p0340, p0578), starting from index 0.

Note: Defines the number of entries in p0571 that should be taken into account. This means that a value of 0 de-activates the complete list.

p0571[0...49] Inhibit list motor/closed-loop control parameter calculation / Inhib list calc

SERVO_S110-DP, SERVO_S110-CAN, SERVO_S110-PN

Can be changed: U, T	**Calculated:** -	**Access level:** 2
Data type: Integer16	**Dyn. index:** -	**Func. diagram:** -
P-Group: Applications	**Unit group:** -	**Unit selection:** -
Not for motor type: -	**Scaling:** -	**Expert list:** 1
Min	**Max**	**Factory setting**
0	2142	0

Description: The inhibit list contains parameters that should be withdrawn from the automatic motor and closed-loop control parameter calculation (p0340, p0578).

Value:
0: No parameter
348: Speed at the start of field weakening Vdc = 600 V
600: Motor temperature sensor
640: Current limit
1082: Maximum speed
1441: Actual speed smoothing time
1460: Speed controller P gain
1462: Speed controller integral time
1470: Speed controller P gain encoderless
1472: Speed controller integral time encoderless
1520: Torque limit upper/motoring
1521: Torque limit lower/regenerative
1530: Power limit motoring
1531: Power limit regenerative
1590: Flux controller P gain

1592: Flux controller integral time
1656: Activates current setpoint filter
2141: Speed threshold 1
2142: Hysteresis speed 1

Note: p0570 defines the number of entries (starting at index 0) for which the inhibit should apply. p0572 can be used to define for which drive data sets the inhibit list should apply.

If a motor data set is entered into a parameter number, then this is not overwritten as soon as only one drive data set refers to the motor data set (p0186).

p0572[0...n] Activate inhibit list / Act inhib list

SERVO_S110-DP, SERVO_S110-CAN, SERVO_S110-PN

Can be changed: U, T	**Calculated:** -	**Access level:** 2
Data type: Integer16	**Dyn. index:** DDS, p0180	**Func. diagram:** -
P-Group: Applications	**Unit group:** -	**Unit selection:** -
Not for motor type: -	**Scaling:** -	**Expert list:** 1
Min	**Max**	**Factory setting**
0	1	0

Description: Enable ID as to whether the parameters of the inhibit list p0571 should be overwritten when calculating the motor and closed-loop control parameters for the particular drive data set (index = DDS).

Value:
0: No
1: Yes

Note: 0: The automatic calculation (p0340, p0578) also overwrites the parameters of list p0571.

1: The automatic calculation (p0340, p0578) does not overwrite the parameters of list p0571.

p0573 Inhibit automatic reference value calculation / Inhibit calc

SERVO_S110-DP, SERVO_S110-CAN, SERVO_S110-PN

Can be changed: U, T	**Calculated:** -	**Access level:** 2
Data type: Integer16	**Dyn. index:** -	**Func. diagram:** -
P-Group: Applications	**Unit group:** -	**Unit selection:** -
Not for motor type: -	**Scaling:** -	**Expert list:** 1
Min	**Max**	**Factory setting**
0	1	0

Description: Setting to inhibit the calculation of reference parameters (e.g. p2000) when automatically calculating the motor and closed-loop control parameters (p0340, p3900).

Value:
0: No
1: Yes

Notice: The inhibit for the reference value calculation is canceled when new motor parameters (e.g. p0305) are entered and only one drive data set exists (p0180 = 1). This is the case during initial commissioning.

Once the motor and control parameters have been calculated (p0340, p3900), the inhibit for the reference value calculation is automatically re-activated.

Note: If value = 0:

The automatic calculation (p0340, p3900) overwrites the reference parameters.

If value = 1:

The automatic calculation (p0340, p3900) does not overwrite the reference parameters.

p0578[0...n] Calculate technology-dependent parameters / Calc tec par

SERVO_S110-DP, SERVO_S110-CAN, SERVO_S110-PN

Can be changed: C2(5), T	**Calculated:** -	**Access level:** 2
Data type: Integer16	**Dyn. index:** DDS, p0180	**Func. diagram:** -
P-Group: Applications	**Unit group:** -	**Unit selection:** -
Not for motor type: -	**Scaling:** -	**Expert list:** 1
Min	**Max**	**Factory setting**
0	1	0

Description: This parameter is used to calculate all parameters that depend on the technology of the application (p0500).

All of the parameters are calculated that can also be determined using p0340 = 5.

Value:
0: No calculation
1: Complete calculation

Note: At the end of the calculations, p0578 is automatically set to 0.

p0580 Measuring probe input terminal / MT input terminal

SERVO_S110-DP, SERVO_S110-CAN, SERVO_S110-PN

Can be changed: U, T	**Calculated:** -	**Access level:** 3
Data type: Integer16	**Dyn. index:** -	**Func. diagram:** -
P-Group: Encoder	**Unit group:** -	**Unit selection:** -
Not for motor type: -	**Scaling:** -	**Expert list:** 1
Min	**Max**	**Factory setting**
0	7	0

Description: Sets the input terminal for the measuring probe for speed actual value measurement.

Value:
0: No meas probe
1: DI/DO 9 (X132.2)
2: DI/DO 10 (X132.3)
3: DI/DO 11 (X132.4)
7: DI/DO 8 (X132.1)

Dependency: Refer to: p0728
Refer to: A07498

Note: The terminal must be set as input (p0728).
If a parameter change is rejected, a check should be performed as to whether the input terminal is already being used in p0488, p0489, p0493, p0494, p0495, p0680, p2517 or p2518.
DI/DO: Bidirectional Digital Input/Output

p0595 Selecting technological units / Select tech units

SERVO_S110-DP (Tech_ctrl), SERVO_S110-CAN (Tech_ctrl), SERVO_S110-PN (Tech_ctrl)

Can be changed: C2(5)	**Calculated:** -	**Access level:** 1
Data type: Integer16	**Dyn. index:** -	**Func. diagram:** -
P-Group: Applications	**Unit group:** -	**Unit selection:** -
Not for motor type: -	**Scaling:** -	**Expert list:** 1
Min	**Max**	**Factory setting**
1	32	1

Description: Selects the units for the parameters of the technology controller.

Value:
1: %
2: 1 referred, no dimensions
3: bar
4: °C
5: Pa
6: ltr/s
7: m³/s
8: ltr/min
9: m³/min
10: ltr/h
11: m³/h
12: kg/s
13: kg/min
14: kg/h
15: t/min
16: t/h
17: N
18: kN
19: Nm
20: psi
21: °F
22: gallon/s
23: inch³/s
24: gallon/min
25: inch³/min
26: gallon/h
27: inch³/h
28: lb/s
29: lb/min
30: lb/h

31: lbf
32: lbf ft

Dependency: Only units of parameters with unit group 9_1 can be changed over using this parameter.
Refer to: p0596

p0596 Reference quantity, technological units / Ref tech units

SERVO_S110-DP (Tech_ctrl), SERVO_S110-CAN (Tech_ctrl), SERVO_S110-PN (Tech_ctrl)

Can be changed: T	**Calculated:** -	**Access level:** 1
Data type: FloatingPoint32	**Dyn. index:** -	**Func. diagram:** -
P-Group: -	**Unit group:** -	**Unit selection:** -
Not for motor type: -	**Scaling:** -	**Expert list:** 1
Min	**Max**	**Factory setting**
0.01	340.28235E36	1.00

Description: Sets the reference quantity for the technological units. When changing over using changeover parameter 595 to absolute units, all of the parameters involved refer to the reference quantity.

Dependency: Refer to: p0595

p0600[0...n] Motor temperature sensor for monitoring / Mot temp_sensor

SERVO_S110-DP, SERVO_S110-CAN, SERVO_S110-PN

Can be changed: C2(3), U, T	**Calculated:** CALC_MOD_ALL	**Access level:** 2
Data type: Integer16	**Dyn. index:** MDS, p0130	**Func. diagram:** 8016
P-Group: Motor	**Unit group:** -	**Unit selection:** -
Not for motor type: -	**Scaling:** -	**Expert list:** 1
Min	**Max**	**Factory setting**
0	11	1

Description: Sets the sensor to monitor the motor temperature.

Value:
0: No sensor
1: Temperature sensor via encoder 1
10: Temperature sensor via a BICO interconnection
11: Temperature sensor via Motor Module / CU terminals

Dependency: Refer to: r0458, p0601, p0603

Caution:
If, for a selected temperature sensor (p0600 > 0), the motor temperature sensor is not connected but another encoder, then the temperature adaptation of the motor resistances must be switched out. Otherwise, in controlled-loop operation, torque errors will occur that will mean that the drive will not be able to be stopped.

Notice: The parameter is calculated in the drive using p0340 and is inhibited for p0340 > 0.

Note: Re p0600 = 0:
With induction motors, the motor temperature is calculated using the motor temperature model (see also p0612.1).
Re p0600 = 10:
The BICO interconnection should be executed via connector input p0603.
Re p0600 = 11:
For the CU305, a temperature sensor can be connected to terminal X133.7/8.
Information on how to connect up a temperature sensor is provided in the following reference:
SINAMICS S110 Manual

p0601[0...n] Motor temperature sensor type / Mot_temp_sens type

SERVO_S110-DP, SERVO_S110-CAN, SERVO_S110-PN

Can be changed: C2(3), U, T	**Calculated:** -	**Access level:** 2
Data type: Integer16	**Dyn. index:** MDS, p0130	**Func. diagram:** 8016
P-Group: Motor	**Unit group:** -	**Unit selection:** -
Not for motor type: -	**Scaling:** -	**Expert list:** 1
Min	**Max**	**Factory setting**
0	3	2

Description: Sets the sensor type for the motor temperature monitoring.

Value:
0: No sensor
1: PTC alarm & timer
2: KTY84
3: KTY84 and PTC (only for motors with DRIVE-CLiQ):

Dependency: The thermal motor model is only calculated for p0612.1 = 1.
Refer to: r0458, p0600, p0612

Note: The temperature sensor for the temperature evaluation is set in p0600.
For p0600 = 10 (temperature sensor via a BICO interconnection), the setting in p0601 has no significance.
Information on using temperature sensors is provided in the following literature:
- hardware description of the appropriate components
- SINAMICS S120 Commissioning Manual
Re p0601 = 1 (PTC alarm & timer):
Tripping resistance = 1650 Ohm.
After the tripping resistance has been exceeded, an appropriate alarm is output and after the delay time set in p0606 has expired, an appropriate fault is output.
Re p0601 = 3 (KTY84 and PTC (only for motors with DRIVE-CLiQ)):
For motors with DRIVE-CLiQ and 2 temperature sensors, the value is automatically set. More than one temperature channel can only be evaluated using this particular setting.

p0603 CI: Motor temperature signal source / Mot temp S_src

SERVO_S110-DP, SERVO_S110-CAN, SERVO_S110-PN

Can be changed: C2(3), T	**Calculated:** -	**Access level:** 2
Data type: Unsigned32 / FloatingPoint32	**Dyn. index:** -	**Func. diagram:** 8016
P-Group: Motor	**Unit group:** -	**Unit selection:** -
Not for motor type: -	**Scaling:** p2006	**Expert list:** 1
Min	**Max**	**Factory setting**
-	-	0

Description: Sets the signal source to evaluate the motor temperature via a BICO interconnection.

Dependency: Refer to: p0600

Note: Temperature sensor KTY: Valid temperature range -48 °C ... 248 °C.
PTC temperature sensor:
For a value = -50 °C, the following applies: Motor temperature < nominal response temperature of the PTC.
For a value = 250 °C, the following applies: Motor temperature >= nominal response temperature of the PTC.
Note:
When using a Terminal Module 31 (TM31), the following applies:
- the sensor type used is set using p4100.
- the temperature signal is interconnected using CO: r4105.

p0604[0...n] Motor temperature alarm threshold / Mot_temp al thr

SERVO_S110-DP, SERVO_S110-CAN, SERVO_S110-PN

Can be changed: C2(3), U, T	**Calculated:** -	**Access level:** 2
Data type: FloatingPoint32	**Dyn. index:** MDS, p0130	**Func. diagram:** 8016
P-Group: Motor	**Unit group:** 21_1	**Unit selection:** p0505
Not for motor type: -	**Scaling:** -	**Expert list:** 1
Min	**Max**	**Factory setting**
0.0 [°C]	200.0 [°C]	120.0 [°C]

Description: Sets the alarm threshold for monitoring the motor temperature.

Dependency: Refer to: p0606

Caution: When selecting a catalog motor (p0301), this parameter is automatically pre-assigned and is write protected. Information in p0300 should be carefully observed when removing write protection.

Note: The hysteresis for canceling the alarm is 2 Kelvin.
When quick commissioning is exited with p3900 > 0, then the parameter is reset if a catalog motor has not been selected (refer to p0300).

p0605[0...n] Motor temperature fault threshold / Mot_temp flt thr

SERVO_S110-DP, SERVO_S110-CAN, SERVO_S110-PN

Can be changed: C2(3), U, T	**Calculated:** -	**Access level:** 2
Data type: FloatingPoint32	**Dyn. index:** MDS, p0130	**Func. diagram:** 8016, 8017
P-Group: Motor	**Unit group:** 21_1	**Unit selection:** p0505
Not for motor type: -	**Scaling:** -	**Expert list:** 1
Min	**Max**	**Factory setting**
0.0 [°C]	200.0 [°C]	145.0 [°C]

Description: Sets the fault threshold for monitoring the motor temperature.

Caution: When selecting a catalog motor (p0301), this parameter is automatically pre-assigned and is write protected. Information in p0300 should be carefully observed when removing write protection.

Note: The hysteresis for canceling the fault is 2 Kelvin.

When quick commissioning is exited with p3900 > 0, then the parameter is reset if a catalog motor has not been selected (refer to p0300).

p0606[0...n] Motor temperature timer / Mot_temp timer

SERVO_S110-DP, SERVO_S110-CAN, SERVO_S110-PN

Can be changed: C2(3), U, T	**Calculated:** -	**Access level:** 2
Data type: FloatingPoint32	**Dyn. index:** MDS, p0130	**Func. diagram:** 8016
P-Group: Motor	**Unit group:** -	**Unit selection:** -
Not for motor type: -	**Scaling:** -	**Expert list:** 1
Min	**Max**	**Factory setting**
0.000 [s]	600.000 [s]	240.000 [s]

Description: Sets the timer for the alarm threshold for the motor temperature monitoring function.

This timer is started when the temperature alarm threshold (p0604) is exceeded.

If the timer expires before the temperature in the meantime falls below the alarm threshold, the fault F07011 is output.

If the temperature fault threshold (p0605) is prematurely exceeded before the timer has expired, then fault F07011 is immediately output.

As long as the motor temperature has still not exceeded the fault threshold and the alarm thresholds have again been undershot, the fault can be acknowledged.

Dependency: Refer to: p0604, p0605

Refer to: F07011, A07910

Note: With p0606 = 0 s, the timer is de-activated and only the fault threshold is effective.

KTY sensor: When setting the minimum value, the timer is disabled and a fault is not output until p0605 is exceeded.

PTC sensor, bimetallic NC contact: The timer minimum value has no special significance.

p0607[0...n] Temperature sensor fault timer / Sensor fault time

SERVO_S110-DP, SERVO_S110-CAN, SERVO_S110-PN

Can be changed: C2(3), U, T	**Calculated:** -	**Access level:** 2
Data type: FloatingPoint32	**Dyn. index:** MDS, p0130	**Func. diagram:** -
P-Group: Motor	**Unit group:** -	**Unit selection:** -
Not for motor type: -	**Scaling:** -	**Expert list:** 1
Min	**Max**	**Factory setting**
0.000 [s]	600.000 [s]	0.100 [s]

Description: Sets the timer between the output of alarm and fault for a temperature sensor fault.

If there is a sensor fault, this timer is started. If the sensor fault is still present after the timer has expired, a corresponding fault message is output.

Notice: The parameterized time is internally rounded-off to an integer multiple of 48 ms.

Note: If the motor is an induction motor, the timer is switched off when setting the minimum value and no alarm is output. Temperature monitoring is then based on the thermal model.

p0611[0...n] I2t motor model thermal time constant / I2t mot_mod T

SERVO_S110-DP, SERVO_S110-CAN, SERVO_S110-PN

Can be changed: C2(3), U, T	**Calculated:** -	**Access level:** 3
Data type: FloatingPoint32	**Dyn. index:** MDS, p0130	**Func. diagram:** 8017
P-Group: Motor	**Unit group:** -	**Unit selection:** -
Not for motor type: ASM, REL, FEM	**Scaling:** -	**Expert list:** 1
Min	**Max**	**Factory setting**
0 [s]	20000 [s]	0 [s]

Description: Sets the winding time constant.

The time constant specifies the warm-up time of the cold stator winding when loaded with the motor standstill current up until a temperature rise of 63 % of the continuously permissible winding temperature has been reached.

Dependency: This parameter is only used for synchronous motors (p0300 = 2xx).

Refer to: r0034, p0612, p0615

Refer to: F07011, A07012, A07910

Caution: This parameter is automatically pre-set from the motor database for motors from the motor list (p0301).

When selecting a catalog motor, this parameter cannot be changed (write protection). Information in p0300 should be carefully observed when removing write protection.

Note: When parameter p0611 is reset to 0, then this switches out the thermal I2t motor model (also refer to p0612).

If no temperature sensor is parameterized, then the ambient temperature for the thermal motor model is referred to p0625.

p0612[0...n] Thermal motor model configuration / Therm Mot_mod conf

SERVO_S110-DP, SERVO_S110-CAN, SERVO_S110-PN

Can be changed: U, T	**Calculated:** -	**Access level:** 2
Data type: Unsigned16	**Dyn. index:** MDS, p0130	**Func. diagram:** 8017
P-Group: -	**Unit group:** -	**Unit selection:** -
Not for motor type: REL, FEM	**Scaling:** -	**Expert list:** 1
Min	**Max**	**Factory setting**
-	-	0010 bin

Description: Sets the configuration for the thermal motor model.

Bit field:

Bit	Signal name	1 signal	0 signal	FP
00	Activate I2t motor model	Yes	No	-
01	Activate motor temperature model	Yes	No	-

Dependency: Refer to: r0034, p0611, p0615

Note: Re bit 00:

This bit is only used for permanent-magnet synchronous motors (p0300 = 2xx). It is only possible to switch in thermal I2t monitoring with a time constant greater than zero (p0611 > 0).

Re bit 01:

This bit is used to activate/de-activate the thermal motor model for induction motors.

p0615[0...n] I2t motor model fault threshold / I2t mot_mod thresh

SERVO_S110-DP, SERVO_S110-CAN, SERVO_S110-PN

Can be changed: C2(3), U, T	**Calculated:** -	**Access level:** 2
Data type: FloatingPoint32	**Dyn. index:** MDS, p0130	**Func. diagram:** 8017
P-Group: Motor	**Unit group:** 21_1	**Unit selection:** p0505
Not for motor type: ASM, REL, FEM	**Scaling:** -	**Expert list:** 1
Min	**Max**	**Factory setting**
0.0 [°C]	220.0 [°C]	180.0 [°C]

Description: Sets the fault threshold for monitoring using the thermal I2t motor model.

Dependency: The parameter is only used for permanent-magnet synchronous motors (p0300 = 2xx).

Refer to: r0034, p0611, p0612

Refer to: F07011, A07012

Caution: When selecting a catalog motor (p0301), this parameter is automatically pre-assigned and is write protected. Information in p0300 should be carefully observed when removing write protection.

p0616[0...n] Motor overtemperature alarm threshold 1 / Mot temp alarm 1

SERVO_S110-DP, SERVO_S110-CAN, SERVO_S110-PN

Can be changed: C2(3), U, T	**Calculated:** -	**Access level:** 2
Data type: FloatingPoint32	**Dyn. index:** MDS, p0130	**Func. diagram:** 8016
P-Group: Motor	**Unit group:** 21_1	**Unit selection:** p0505
Not for motor type: -	**Scaling:** -	**Expert list:** 1
Min	**Max**	**Factory setting**
0.0 [°C]	200.0 [°C]	195.0 [°C]

Description: Sets the alarm threshold 1 for monitoring the motor temperature.

Note: The alarm threshold is not, as for p0604, coupled to the timer p0606. The hysteresis for canceling the fault is 2 Kelvin.

p0620[0...n] Thermal adaptation, stator and rotor resistance / Mot therm_adapt R

SERVO_S110-DP, SERVO_S110-CAN, SERVO_S110-PN

Can be changed: C2(3), U, T	**Calculated:** -	**Access level:** 2
Data type: Integer16	**Dyn. index:** MDS, p0130	**Func. diagram:** -
P-Group: Motor	**Unit group:** -	**Unit selection:** -
Not for motor type: -	**Scaling:** -	**Expert list:** 1
Min	**Max**	**Factory setting**
0	2	2

Description: Sets the thermal adaptation of the stator/primary section resistance and rotor/secondary section resistance according to r0395 and r0396.

Value:
0: No thermal adaptation of stator and rotor resistances
1: Resistances adapted to the temperatures of the thermal model
2: Resistances adapted to the measured stator winding temperature

Note: For p0620 = 1, the following applies:

The stator resistance is adapted using the temperature in r0035 and the rotor resistance together with the model temperature in r0633.

For p0620 = 2, the following applies:

The stator resistance is adapted using the temperature in r0035. If applicable, the rotor temperature for adapting the rotor resistance is calculated from the stator temperature (r0035) as follows:

theta_R = (r0628 + r0625) / (r0627 + r0625) * r0035

p0624[0...n] Motor temperature offset PT100 / Mot T_offset PT100

SERVO_S110-DP, SERVO_S110-CAN, SERVO_S110-PN

Can be changed: C2(3), U, T	**Calculated:** -	**Access level:** 3
Data type: FloatingPoint32	**Dyn. index:** MDS, p0130	**Func. diagram:** 8016
P-Group: Motor	**Unit group:** 21_2	**Unit selection:** p0505
Not for motor type: -	**Scaling:** -	**Expert list:** 1
Min	**Max**	**Factory setting**
-100.0 [K]	100.0 [K]	0.0 [K]

Description: Sets the temperature offset for the PT100 measured value.

If there is a difference between the motor temperature displayed in r0035 and the actual motor temperature, this offset can be entered in this parameter, thereby compensating for the difference.

Dependency: Refer to: p0600, p0601

Note: The parameter only takes effect with the following settings:

- Temperature sensor of the power unit detected (p0600 = 11).
- Sensor type PT100 selected (p0601 = 5).

If the resistance in series with the PT100 (e.g. the cable resistance of the feeder cable) is known, the following conversion formula must be used:

Offset in p0624 = Measured resistance in ohms x 2.5 K/Ohm

Example:

Measured cable resistance = 2 Ohm

--> 2 Ohm x 2.5 K / Ohm = 5.0 K

p0625[0...n] Motor ambient temperature / Mot T_ambient

SERVO_S110-DP, SERVO_S110-CAN, SERVO_S110-PN

Can be changed: C2(3), U, T	**Calculated:** CALC_MOD_EQU	**Access level:** 3
Data type: FloatingPoint32	**Dyn. index:** MDS, p0130	**Func. diagram:** 8016
P-Group: Motor	**Unit group:** 21_1	**Unit selection:** p0505
Not for motor type: -	**Scaling:** -	**Expert list:** 1
Min	**Max**	**Factory setting**
-40 [°C]	80 [°C]	20 [°C]

Description: Defines the ambient temperature of the motor for calculating the motor temperature model.

Note: The parameters for stator and rotor resistance (p0350, p0354) refer to this temperature.

If the thermal I2t motor model is activated for permanent-magnet synchronous motors (refer to p0611), p0625 is included in the model calculation if a temperature sensor is not being used (see p0601).

p0626[0...n] Motor overtemperature, stator core / Mot T_over core

SERVO_S110-DP, SERVO_S110-CAN, SERVO_S110-PN

Can be changed: C2(3), U, T	**Calculated:** -	**Access level:** 3
Data type: FloatingPoint32	**Dyn. index:** MDS, p0130	**Func. diagram:** 8016
P-Group: Motor	**Unit group:** 21_2	**Unit selection:** p0505
Not for motor type: PMSM, REL, FEM	**Scaling:** -	**Expert list:** 1
Min	**Max**	**Factory setting**
20 [K]	200 [K]	50 [K]

Description: Defines the rated overtemperature of the stator core referred to the ambient temperature.

Dependency: For 1LA5 and 1LA7 motors (refer to p0300), the parameter is pre-set as a function of p0307 and p0311.

Refer to: p0625

Note: When quick commissioning is exited with p3900 > 0, then the parameter is reset if a catalog motor has not been selected (refer to p0300).

p0627[0...n] Motor overtemperature, stator winding / Mot T_over stator

SERVO_S110-DP, SERVO_S110-CAN, SERVO_S110-PN

Can be changed: C2(3), U, T	**Calculated:** -	**Access level:** 3
Data type: FloatingPoint32	**Dyn. index:** MDS, p0130	**Func. diagram:** 8016
P-Group: Motor	**Unit group:** 21_2	**Unit selection:** p0505
Not for motor type: PMSM, REL, FEM	**Scaling:** -	**Expert list:** 1
Min	**Max**	**Factory setting**
20 [K]	200 [K]	80 [K]

Description: Defines the rated overtemperature of the stator winding referred to the ambient temperature.

Dependency: For 1LA5 and 1LA7 motors (refer to p0300), the parameter is pre-set as a function of p0307 and p0311.

Refer to: p0625

Note: When quick commissioning is exited with p3900 > 0, then the parameter is reset if a catalog motor has not been selected (refer to p0300).

p0628[0...n] Motor overtemperature rotor winding / Mot T_over rotor

SERVO_S110-DP, SERVO_S110-CAN, SERVO_S110-PN

Can be changed: C2(3), U, T	**Calculated:** -	**Access level:** 3
Data type: FloatingPoint32	**Dyn. index:** MDS, p0130	**Func. diagram:** 8016
P-Group: Motor	**Unit group:** 21_2	**Unit selection:** p0505
Not for motor type: PMSM, REL, FEM	**Scaling:** -	**Expert list:** 1
Min	**Max**	**Factory setting**
20 [K]	200 [K]	100 [K]

Description: Defines the rated overtemperature of the squirrel cage rotor referred to ambient temperature.

Dependency: For 1LA5 and 1LA7 motors (refer to p0300), the parameter is pre-set as a function of p0307 and p0311.

Refer to: p0625

Note: When quick commissioning is exited with p3900 > 0, then the parameter is reset if a catalog motor has not been selected (refer to p0300).

r0630[0...n] Motor temperature model ambient temperature / MotTMod T_amb

SERVO_S110-DP, SERVO_S110-CAN, SERVO_S110-PN

Can be changed: -	**Calculated:** -	**Access level:** 4
Data type: FloatingPoint32	**Dyn. index:** MDS, p0130	**Func. diagram:** 8016
P-Group: Motor	**Unit group:** 21_1	**Unit selection:** p0505
Not for motor type: PMSM, REL, FEM	**Scaling:** p2006	**Expert list:** 1
Min	**Max**	**Factory setting**
- [°C]	- [°C]	- [°C]

Description: Displays the ambient temperature of the motor temperature model.

r0631[0...n] Motor temperature model, stator core temperature / MotTMod T_core

SERVO_S110-DP, SERVO_S110-CAN, SERVO_S110-PN

Can be changed: -	**Calculated:** -	**Access level:** 4
Data type: FloatingPoint32	**Dyn. index:** MDS, p0130	**Func. diagram:** 8016
P-Group: Motor	**Unit group:** 21_1	**Unit selection:** p0505
Not for motor type: PMSM, REL, FEM	**Scaling:** p2006	**Expert list:** 1
Min	**Max**	**Factory setting**
- [°C]	- [°C]	- [°C]

Description: Displays the stator core temperature of the motor temperature model.

r0632[0...n] Motor temperature model, stator winding temperature / MotTMod T_copper

SERVO_S110-DP, SERVO_S110-CAN, SERVO_S110-PN

Can be changed: -	**Calculated:** -	**Access level:** 4
Data type: FloatingPoint32	**Dyn. index:** MDS, p0130	**Func. diagram:** 8016
P-Group: Motor	**Unit group:** 21_1	**Unit selection:** p0505
Not for motor type: PMSM, REL, FEM	**Scaling:** p2006	**Expert list:** 1
Min	**Max**	**Factory setting**
- [°C]	- [°C]	- [°C]

Description: Displays the stator winding temperature of the motor temperature model.

r0633[0...n] Motor temperature model, rotor temperature / MotTMod T_rotor

SERVO_S110-DP, SERVO_S110-CAN, SERVO_S110-PN

Can be changed: -	**Calculated:** -	**Access level:** 4
Data type: FloatingPoint32	**Dyn. index:** MDS, p0130	**Func. diagram:** 8016
P-Group: Motor	**Unit group:** 21_1	**Unit selection:** p0505
Not for motor type: PMSM, REL, FEM	**Scaling:** p2006	**Expert list:** 1
Min	**Max**	**Factory setting**
- [°C]	- [°C]	- [°C]

Description: Displays the rotor temperature of the motor temperature model.

p0640[0...n] Current limit / Current limit

SERVO_S110-DP, SERVO_S110-CAN, SERVO_S110-PN

Can be changed: C2(1, 3), U, T	**Calculated:** CALC_MOD_ALL	**Access level:** 2
Data type: FloatingPoint32	**Dyn. index:** DDS, p0180	**Func. diagram:** 5722
P-Group: Motor	**Unit group:** -	**Unit selection:** -
Not for motor type: -	**Scaling:** -	**Expert list:** 1
Min	**Max**	**Factory setting**
0.00 [Arms]	10000.00 [Arms]	0.00 [Arms]

Description: Sets the current limit.

Dependency: Refer to: r0209, p0323

Note: The parameter is part of the quick commissioning (p0010 = 1); this means that it is appropriately pre-assigned when changing p0305, p0323 and p0338.

The current limit p0640 is limited to r0209 and p0323. The limit to p0323 is not realized if a value of zero is entered there.

The resulting current limit is displayed in r0067 and if required, r0067 is reduced by the thermal model of the Motor Module.

The torque and power limits (p1520, p1521, p1530, p1531) matching the current limit are automatically calculated when exiting the quick commissioning using p3900 > 0 or using the automatic parameterization with p0340 = 3, 5.

Parameter p0640 is pre-assigned as follows using the automatic parameterization (p0340 = 1, p3900 > 0) taking into account the limits r0209 and r0323:

- for induction motors: p0640 = 1.5 x p0305
- for synchronous motors: p0640 = p0338

p0642[0...n] Encoderless operation current reduction / Encoderl op I_red

SERVO_S110-DP, SERVO_S110-CAN, SERVO_S110-PN

Can be changed: C2(1, 3), U, T	**Calculated:** -	**Access level:** 1
Data type: FloatingPoint32	**Dyn. index:** DDS, p0180	**Func. diagram:** -
P-Group: Motor	**Unit group:** -	**Unit selection:** -
Not for motor type: -	**Scaling:** -	**Expert list:** 1
Min	**Max**	**Factory setting**
0.00 [%]	100.00 [%]	100.00 [%]

Description: Sets the reduction for the current limit in encoderless operation.

The value is referred to p0640.

Dependency: Refer to: r0209, p0323, p0491, p0640, p1300, p1404

Note: If the motor is operated both with encoder as well as without encoder (e.g. p0491 is not equal to 0 or p1404 < p1082) then the maximum current can be reduced in encoderless operation. This reduces disturbing saturation-related motor data changes in encoderless operation.

p0643[0...n] Overvoltage protection for synchronous motors / Overvolt_protect

SERVO_S110-DP, SERVO_S110-CAN, SERVO_S110-PN

Can be changed: T	**Calculated:** -	**Access level:** 3
Data type: Integer16	**Dyn. index:** MDS, p0130	**Func. diagram:** -
P-Group: Motor	**Unit group:** -	**Unit selection:** -
Not for motor type: -	**Scaling:** -	**Expert list:** 1
Min	**Max**	**Factory setting**
0	1	0

Description: Sets the overvoltage protection for synchronous motors in the field-weakening range.

Value:
0: No measure
1: Voltage Protection Module (VPM)

Dependency: Refer to: p0316, p1082, p1231, p9601, p9801

Refer to: F07432, F07906, F07907

Notice: When the speed limiting is removed, the user is responsible for implementing a suitable overvoltage protection.

Note: In the field-weakening range, synchronous motors can, when a fault condition exists, generate high DC link voltages. The following possibilities exist to protect the drive system from being destroyed due to overvoltage:

- limit the maximum speed (p1082) without any additional protection.

The maximum speed without protection is calculated as follows:

p1082 [rpm] <= 11.695 * r0297/p0316 [Nm/A]

- use a Voltage Protection Module (VPM) in conjunction with the function "Safe Torque Off" (p9601, p9801).

When a fault condition exists, the VPM short-circuits the motors. During the short-circuit, the pulses must be suppressed - this means that the terminals for the function "Safe Torque Off" must be connected to the VPM.

- activating the internal voltage protection (IVP) with p1231 = 3.

p0650[0...n] Actual motor operating hours / Mot t_oper act

SERVO_S110-DP, SERVO_S110-CAN, SERVO_S110-PN

Can be changed: T	**Calculated:** -	**Access level:** 3
Data type: Unsigned32	**Dyn. index:** MDS, p0130	**Func. diagram:** -
P-Group: Motor	**Unit group:** -	**Unit selection:** -
Not for motor type: -	**Scaling:** -	**Expert list:** 1
Min	**Max**	**Factory setting**
0 [h]	4294967295 [h]	0 [h]

Description: Displays the operating hours for the corresponding motor.

The motor operating time counter continues to run when the pulses are enabled. When the pulse enable is withdrawn, the counter is held and the value saved.

Dependency: Refer to: p0651
Refer to: A01590
Note: The operating hours counter in p0650 can only be reset to 0. In this case, p0651 is automatically set to 0.
For p0651 = 0, the operating hours counter is disabled.
The operating hours counter only runs with motor data set 0 and 1 (MDS).

p0651[0...n] Motor operating hours maintenance interval / Mot t_op maint

SERVO_S110-DP, SERVO_S110-CAN, SERVO_S110-PN

Can be changed: T	**Calculated:** -	**Access level:** 3
Data type: Unsigned32	**Dyn. index:** MDS, p0130	**Func. diagram:** -
P-Group: Motor	**Unit group:** -	**Unit selection:** -
Not for motor type: -	**Scaling:** -	**Expert list:** 1
Min	**Max**	**Factory setting**
0 [h]	150000 [h]	0 [h]

Description: Sets the service/maintenance intervals in hours for the appropriate motor.
An appropriate fault is output when the operating hours set here are reached.
Dependency: Refer to: p0650
Refer to: A01590
Note: For p0651 = 0, the operating hours counter is disabled.
The operating hours counter only runs with motor data set 0 and 1 (MDS).

p0680[0...7] Central measuring probe input terminal / Cen meas inp

CU_S110-DP, CU_S110-CAN, CU_S110-PN

Can be changed: U, T	**Calculated:** -	**Access level:** 3
Data type: Integer16	**Dyn. index:** -	**Func. diagram:** -
P-Group: Encoder	**Unit group:** -	**Unit selection:** -
Not for motor type: -	**Scaling:** -	**Expert list:** 1
Min	**Max**	**Factory setting**
0	7	0

Description: Sets the digital input used for the function "central measuring probe evaluation".
p0680[0]: Digital input, measuring probe 1
p0680[1]: Digital input, measuring probe 2
...
p0680[7]: Digital input, measuring probe 8
Value:
0: No meas probe
1: DI/DO 9 (X132.2)
2: DI/DO 10 (X132.3)
3: DI/DO 11 (X132.4)
7: DI/DO 8 (X132.1)
Dependency: Refer to: p0728
Note: DI/DO: Bidirectional Digital Input/Output
Prerequisite: The DI/DO must be set as input (p0728.x = 0).
If a parameter change is rejected, a check should be performed as to whether the input terminal is already being used in p0488, p0489, p0493, p0494, p0495, p0580, p2517 or p2518.

p0681 BI: Central measuring probe synchronizing signal signal source / Cen meas sync_sig

CU_S110-DP, CU_S110-CAN, CU_S110-PN

Can be changed: T	**Calculated:** -	**Access level:** 3
Data type: Unsigned32 / Binary	**Dyn. index:** -	**Func. diagram:** -
P-Group: Commands	**Unit group:** -	**Unit selection:** -
Not for motor type: -	**Scaling:** -	**Expert list:** 1
Min	**Max**	**Factory setting**
-	-	0

Description: Sets the signal source for the synchronizing signal (SYN) of the function "central measuring probe evaluation".
The signal is used to synchronize the common system time between the master and slave.
Notice: The parameter may be protected as a result of p0922 or p2079 and cannot be changed.

p0682 CI: Central measuring probe control word signal source / Cen meas STW S_src

CU_S110-DP, CU_S110-CAN, CU_S110-PN

Can be changed: T	**Calculated:** -	**Access level:** 3
Data type: Unsigned32 / Integer16	**Dyn. index:** -	**Func. diagram:** -
P-Group: Displays, signals	**Unit group:** -	**Unit selection:** -
Not for motor type: -	**Scaling:** -	**Expert list:** 1
Min	**Max**	**Factory setting**
-	-	0

Description: Sets the signal source for the control word of the function "central measuring probe evaluation".

p0684 Central measuring probe evaluation technique / Cen meas eval_tech

CU_S110-DP, CU_S110-CAN, CU_S110-PN

Can be changed: U, T	**Calculated:** -	**Access level:** 3
Data type: Integer16	**Dyn. index:** -	**Func. diagram:** -
P-Group: Encoder	**Unit group:** -	**Unit selection:** -
Not for motor type: -	**Scaling:** -	**Expert list:** 1
Min	**Max**	**Factory setting**
0	1	0

Description: Sets the evaluation technique for the "central measuring probe evaluation" function.

Value:
0: Measurement with handshake
1: Measurement without handshake

Note: During measurement without a handshake, the probe may have a higher evaluation frequency.

The setting "Measurement without handshake" must be supported by the higher-level control. This setting cannot be used for SIMOTION D with integrated SINAMICS or with CX32.

r0685 Central measuring probe control word display / Cen meas STW disp

CU_S110-DP, CU_S110-CAN, CU_S110-PN

Can be changed: -	**Calculated:** -	**Access level:** 3
Data type: Unsigned16	**Dyn. index:** -	**Func. diagram:** -
P-Group: Commands	**Unit group:** -	**Unit selection:** -
Not for motor type: -	**Scaling:** -	**Expert list:** 1
Min	**Max**	**Factory setting**
-	-	-

Description: Displays the control word for the function "central measuring probe evaluation".

Bit field:

Bit	Signal name	1 signal	0 signal	FP
00	Falling edge measuring probe 1	Yes	No	-
01	Falling edge measuring probe 2	Yes	No	-
02	Falling edge measuring probe 3	Yes	No	-
03	Falling edge measuring probe 4	Yes	No	-
04	Falling edge measuring probe 5	Yes	No	-
05	Falling edge measuring probe 6	Yes	No	-
06	Falling edge measuring probe 7	Yes	No	-
07	Falling edge measuring probe 8	Yes	No	-
08	Rising edge measuring probe 1	Yes	No	-
09	Rising edge measuring probe 2	Yes	No	-
10	Rising edge measuring probe 3	Yes	No	-
11	Rising edge measuring probe 4	Yes	No	-
12	Rising edge measuring probe 5	Yes	No	-
13	Rising edge measuring probe 6	Yes	No	-
14	Rising edge measuring probe 7	Yes	No	-
15	Rising edge measuring probe 8	Yes	No	-

r0686[0...7] CO: Central measuring probe measuring time rising edge / CenMeas t_meas 0/1

CU_S110-DP, CU_S110-CAN, CU_S110-PN

Can be changed: -	**Calculated:** -	**Access level:** 3
Data type: Unsigned16	**Dyn. index:** -	**Func. diagram:** -
P-Group: Displays, signals	**Unit group:** -	**Unit selection:** -
Not for motor type: -	**Scaling:** -	**Expert list:** 1
Min	**Max**	**Factory setting**
-	-	-

Description: Displays the measuring time for a rising edge at the digital input for the "central measuring probe evaluation" function.
The measuring time is specified as 16-bit value with a resolution of 0.25 µs.
r0686[0]: Measuring time, rising edge measuring probe 1
r0686[1]: Measuring time, rising edge measuring probe 2
r0686[2]: Measuring time, rising edge measuring probe 3
r0686[3]: Measuring time, rising edge measuring probe 4
r0686[4]: Measuring time, rising edge measuring probe 5
r0686[5]: Measuring time, rising edge measuring probe 6
r0686[6]: Measuring time, rising edge measuring probe 7
r0686[7]: Measuring time, rising edge measuring probe 8

r0687[0...7] CO: Central measuring probe measuring time falling edge / CenMeas t_meas 1/0

CU_S110-DP, CU_S110-CAN, CU_S110-PN

Can be changed: -	**Calculated:** -	**Access level:** 3
Data type: Unsigned16	**Dyn. index:** -	**Func. diagram:** -
P-Group: Displays, signals	**Unit group:** -	**Unit selection:** -
Not for motor type: -	**Scaling:** -	**Expert list:** 1
Min	**Max**	**Factory setting**
-	-	-

Description: Displays the measuring time for a falling edge at the digital input for the "central measuring probe evaluation" function.
The measuring time is specified as 16-bit value with a resolution of 0.25 µs.
r0687[0]: Measuring time, falling edge measuring probe 1
r0687[1]: Measuring time, falling edge measuring probe 2
r0687[2]: Measuring time, falling edge measuring probe 3
r0687[3]: Measuring time, falling edge measuring probe 4
r0687[4]: Measuring time, falling edge measuring probe 5
r0687[5]: Measuring time, falling edge measuring probe 6
r0687[6]: Measuring time, falling edge measuring probe 7
r0687[7]: Measuring time, falling edge measuring probe 8

r0688 CO: Central measuring probe status word display / Cen meas ZSW disp

CU_S110-DP, CU_S110-CAN, CU_S110-PN

Can be changed: -	**Calculated:** -	**Access level:** 3
Data type: Unsigned16	**Dyn. index:** -	**Func. diagram:** -
P-Group: Displays, signals	**Unit group:** -	**Unit selection:** -
Not for motor type: -	**Scaling:** -	**Expert list:** 1
Min	**Max**	**Factory setting**
-	-	-

Description: Displays the status word for the function "central measuring probe evaluation".

Bit field:

Bit	Signal name	1 signal	0 signal	FP
00	Digital input measuring probe 1	High	Low	-
01	Digital input measuring probe 2	High	Low	-
02	Digital input measuring probe 3	High	Low	-
03	Digital input measuring probe 4	High	Low	-
04	Digital input measuring probe 5	High	Low	-
05	Digital input measuring probe 6	High	Low	-
06	Digital input measuring probe 7	High	Low	-
07	Digital input measuring probe 8	High	Low	-

08	Sub-sampling measuring probe 1	High	Low	-
09	Sub-sampling measuring probe 2	High	Low	-
10	Sub-sampling measuring probe 3	High	Low	-
11	Sub-sampling measuring probe 4	High	Low	-
12	Sub-sampling measuring probe 5	High	Low	-
13	Sub-sampling measuring probe 6	High	Low	-
14	Sub-sampling measuring probe 7	High	Low	-
15	Sub-sampling measuring probe 8	High	Low	-

r0721 CU digital inputs terminal actual value / CU DI actual value

CU_S110-DP, CU_S110-CAN, CU_S110-PN

Can be changed: - **Calculated:** - **Access level:** 2

Data type: Unsigned32 **Dyn. index:** - **Func. diagram:** 1510, 2020, 2030, 2031, 2100, 2120, 2130, 2131, 2132, 2133

P-Group: Commands **Unit group:** - **Unit selection:** -

Not for motor type: - **Scaling:** - **Expert list:** 1

Min	Max	Factory setting
-	-	-

Description: Displays the actual value at the digital inputs.

This means that the actual input signal can be checked at terminal DI x or DI/DO x prior to switching from the simulation mode (p0795.x = 1) to terminal mode (p0795.x = 0).

Bit field:

Bit	Signal name	1 signal	0 signal	FP
00	DI 0 (X133.1)	High	Low	-
01	DI 1 (X133.2)	High	Low	-
02	DI 2 (X133.3)	High	Low	-
03	DI 3 (X133.4)	High	Low	-
08	DI/DO 8 (X132.1)	High	Low	-
09	DI/DO 9 (X132.2)	High	Low	-
10	DI/DO 10 (X132.3)	High	Low	-
11	DI/DO 11 (X132.4)	High	Low	-
16	DI 16 (X130.1)	High	Low	-
17	DI 17 (X130.2)	High	Low	-
18	DI 18 (X130.4)	High	Low	-
19	DI 19 (X130.5)	High	Low	-
20	DI 20 (X131.1)	High	Low	-
21	DI 21 (X131.2)	High	Low	-
22	DI 22 (X131.4)	High	Low	-

Note: If a DI/DO is parameterized as output (p0728.x = 1), then r0721.x = 0 is displayed.

DI: Digital Input

DI/DO: Bidirectional Digital Input/Output

r0722.0...22 CO/BO: CU digital inputs status / CU DI status

CU_S110-DP, CU_S110-CAN, CU_S110-PN

Can be changed: - **Calculated:** - **Access level:** 1

Data type: Unsigned32 **Dyn. index:** - **Func. diagram:** 1510, 2020, 2030, 2031, 2100, 2120, 2130, 2131, 2132, 2133

P-Group: Commands **Unit group:** - **Unit selection:** -

Not for motor type: - **Scaling:** - **Expert list:** 1

Min	Max	Factory setting
-	-	-

Description: Displays the status of the digital inputs.

Bit field:

Bit	Signal name	1 signal	0 signal	FP
00	DI 0 (X133.1)	High	Low	-
01	DI 1 (X133.2)	High	Low	-
02	DI 2 (X133.3)	High	Low	-
03	DI 3 (X133.4)	High	Low	-
08	DI/DO 8 (X132.1)	High	Low	-
09	DI/DO 9 (X132.2)	High	Low	-
10	DI/DO 10 (X132.3)	High	Low	-

11	DI/DO 11 (X132.4)	High	Low	-
16	DI 16 (X130.1)	High	Low	-
17	DI 17 (X130.2)	High	Low	-
18	DI 18 (X130.4)	High	Low	-
19	DI 19 (X130.5)	High	Low	-
20	DI 20 (X131.1)	High	Low	-
21	DI 21 (X131.2)	High	Low	-
22	DI 22 (X131.4)	High	Low	-

Dependency: Refer to: r0723

Notice: To the terminal designation:
The first designation is valid for CU320, the second for CU310.

Note: DI: Digital Input
DI/DO: Bidirectional Digital Input/Output

r0723.0...22 CO/BO: CU digital inputs status inverted / CU DI status inv

CU_S110-DP, CU_S110-CAN, CU_S110-PN

Can be changed: - **Calculated:** - **Access level:** 1

Data type: Unsigned32 **Dyn. index:** - **Func. diagram:** 1510, 2020, 2030, 2031, 2100, 2120, 2130, 2131, 2132, 2133

P-Group: Commands **Unit group:** - **Unit selection:** -

Not for motor type: - **Scaling:** - **Expert list:** 1

Min	Max	Factory setting
-	-	-

Description: Displays the inverted status of the digital inputs.

Bit field:

Bit	Signal name	1 signal	0 signal	FP
00	DI 0 (X133.1)	High	Low	-
01	DI 1 (X133.2)	High	Low	-
02	DI 2 (X133.3)	High	Low	-
03	DI 3 (X133.4)	High	Low	-
08	DI/DO 8 (X132.1)	High	Low	-
09	DI/DO 9 (X132.2)	High	Low	-
10	DI/DO 10 (X132.3)	High	Low	-
11	DI/DO 11 (X132.4)	High	Low	-
16	DI 16 (X130.1)	High	Low	-
17	DI 17 (X130.2)	High	Low	-
18	DI 18 (X130.4)	High	Low	-
19	DI 19 (X130.5)	High	Low	-
20	DI 20 (X131.1)	High	Low	-
21	DI 21 (X131.2)	High	Low	-
22	DI 22 (X131.4)	High	Low	-

Dependency: Refer to: r0722

Notice: To the terminal designation:
The first designation is valid for CU320, the second for CU310.

Note: DI: Digital Input
DI/DO: Bidirectional Digital Input/Output

p0728 CU set input or output / CU DI or DO

CU_S110-DP, CU_S110-CAN, CU_S110-PN

Can be changed: T **Calculated:** - **Access level:** 1

Data type: Unsigned32 **Dyn. index:** - **Func. diagram:** 1510, 2030, 2031

P-Group: Commands **Unit group:** - **Unit selection:** -

Not for motor type: - **Scaling:** - **Expert list:** 1

Min	Max	Factory setting
-	-	0000 0000 0000 0000 bin

Description: Sets the bidirectional digital inputs/outputs as an input or output.

Bit field:

Bit	Signal name	1 signal	0 signal	FP
08	DI/DO 8 (X132.1)	Output	Input	2030
09	DI/DO 9 (X132.2)	Output	Input	2030

10	DI/DO 10 (X132.3)	Output	Input	2031
11	DI/DO 11 (X132.4)	Output	Input	2031

Note: DI/DO: Bidirectional Digital Input/Output

r0729 CU digital outputs access authority / CU DO acc_auth

CU_S110-DP, CU_S110-CAN, CU_S110-PN

Can be changed: - **Calculated:** - **Access level:** 1
Data type: Unsigned32 **Dyn. index:** - **Func. diagram:** 2030, 2031
P-Group: Commands **Unit group:** - **Unit selection:** -
Not for motor type: - **Scaling:** - **Expert list:** 1

Min	Max	Factory setting
-	-	-

Description: Displays the access authority at the digital outputs.
Bit = 1:
The control has access authority to the digital output via PROFIBUS or direct access.
Bit = 0:
The drive has access authority to the digital output or the digital input/output is not set as digital output or is not available.

Bit field:

Bit	Signal name	1 signal	0 signal	FP
08	DI/DO 8 (X132.1)	High	Low	-
09	DI/DO 9 (X132.2)	High	Low	-
10	DI/DO 10 (X132.3)	High	Low	-
11	DI/DO 11 (X132.4)	High	Low	-
16	DO 16 (X131.5)	High	Low	-

Dependency: Refer to: p0728, p0738, p0739, p0740, p0741, r0747, p0748
Note: The DI/DO must be connected as output (p0728).
DI/DO: Bidirectional Digital Input/Output

p0738 BI: CU signal source for terminal DI/DO 8 / CU S_src DI/DO 8

CU_S110-DP, CU_S110-CAN, CU_S110-PN

Can be changed: U, T **Calculated:** - **Access level:** 1
Data type: Unsigned32 / Binary **Dyn. index:** - **Func. diagram:** 1510, 2030
P-Group: Commands **Unit group:** - **Unit selection:** -
Not for motor type: - **Scaling:** - **Expert list:** 1

Min	Max	Factory setting
-	-	0

Description: Sets the signal source for terminal DI/DO 8 (X132.1).
Notice: The parameter may be protected as a result of p0922 or p2079 and cannot be changed.
Note: Prerequisite: The DI/DO must be set as an output (p0728.8 = 1).
DI/DO: Bidirectional Digital Input/Output

p0739 BI: CU signal source for terminal DI/DO 9 / CU S_src DI/DO 9

CU_S110-DP, CU_S110-CAN, CU_S110-PN

Can be changed: U, T **Calculated:** - **Access level:** 1
Data type: Unsigned32 / Binary **Dyn. index:** - **Func. diagram:** 1510, 2030, 2130, 2497, 2498
P-Group: Commands **Unit group:** - **Unit selection:** -
Not for motor type: - **Scaling:** - **Expert list:** 1

Min	Max	Factory setting
-	-	0

Description: Sets the signal source for terminal DI/DO 9 (X132.2).
Notice: The parameter may be protected as a result of p0922 or p2079 and cannot be changed.
Note: Prerequisite: The DI/DO must be set as an output (p0728.9 = 1).
DI/DO: Bidirectional Digital Input/Output

p0740 BI: CU signal source for terminal DI/DO 10 / CU S_src DI/DO 10

CU_S110-DP, CU_S110-CAN, CU_S110-PN

Can be changed: U, T	**Calculated:** -	**Access level:** 1
Data type: Unsigned32 / Binary	**Dyn. index:** -	**Func. diagram:** 1510, 2031, 2497, 2498
P-Group: Commands	**Unit group:** -	**Unit selection:** -
Not for motor type: -	**Scaling:** -	**Expert list:** 1
Min	**Max**	**Factory setting**
-	-	0

Description: Sets the signal source for terminal DI/DO 10 (X132.3).

Notice: The parameter may be protected as a result of p0922 or p2079 and cannot be changed.

Note: Prerequisite: The DI/DO must be set as an output (p0728.10 = 1).
DI/DO: Bidirectional Digital Input/Output

p0741 BI: CU signal source for terminal DI/DO 11 / CU S_src DI/DO 11

CU_S110-DP, CU_S110-CAN, CU_S110-PN

Can be changed: U, T	**Calculated:** -	**Access level:** 1
Data type: Unsigned32 / Binary	**Dyn. index:** -	**Func. diagram:** 1510, 2031, 2497, 2498
P-Group: Commands	**Unit group:** -	**Unit selection:** -
Not for motor type: -	**Scaling:** -	**Expert list:** 1
Min	**Max**	**Factory setting**
-	-	0

Description: Sets the signal source for terminal DI/DO 11 (X132.4).

Notice: The parameter may be protected as a result of p0922 or p2079 and cannot be changed.

Note: Prerequisite: The DI/DO must be set as an output (p0728.11 = 1).
DI/DO: Bidirectional Digital Input/Output

p0746 BI: CU signal source for terminal DO 16 / CU S_src DO 16

CU_S110-DP, CU_S110-CAN, CU_S110-PN

Can be changed: U, T	**Calculated:** -	**Access level:** 1
Data type: Unsigned32 / Binary	**Dyn. index:** -	**Func. diagram:** 1510, 2032
P-Group: Commands	**Unit group:** -	**Unit selection:** -
Not for motor type: -	**Scaling:** -	**Expert list:** 1
Min	**Max**	**Factory setting**
-	-	0

Description: Sets the signal source for terminal DO 16.

Notice: The parameter may be protected as a result of p0922 or p2079 and cannot be changed.
Terminal DO 16 is used for Safety Extended Functions if these have been enabled using p9601 and are not controlled via PROFIsafe, and provided that a signal source has been set for the F-DO using p10042.
The signal source entered in p0746 is then no longer output at terminal DO 16.

Note: DO: Digital Output

r0747 CU digital outputs status / CU DO status

CU_S110-DP, CU_S110-CAN, CU_S110-PN

Can be changed: -	**Calculated:** -	**Access level:** 1
Data type: Unsigned32	**Dyn. index:** -	**Func. diagram:** 2130, 2131, 2132, 2133
P-Group: Commands	**Unit group:** -	**Unit selection:** -
Not for motor type: -	**Scaling:** -	**Expert list:** 1
Min	**Max**	**Factory setting**
-	-	-

Description: Displays the status of digital outputs.

Bit field:

Bit	Signal name	1 signal	0 signal	FP
08	DI/DO 8 (X132.1)	High	Low	-
09	DI/DO 9 (X132.2)	High	Low	-
10	DI/DO 10 (X132.3)	High	Low	-

11	DI/DO 11 (X132.4)	High	Low	-
16	DO 16 (X131.5)	High	Low	-

Notice: Terminal DO 16 is used for Safety Extended Functions as soon as this is enabled using p9601 and assuming that it is not controlled via PROFIsafe.
The signal source set in p0746 is then no longer output at terminal DO 16.

Note: Inversion using p0748 has been taken into account.
DI/DO: Bidirectional Digital Input/Output

p0748 CU invert digital outputs / CU DO inv

CU_S110-DP, CU_S110-CAN, CU_S110-PN

Can be changed: U, T | **Calculated:** - | **Access level:** 1
Data type: Unsigned32 | **Dyn. index:** - | **Func. diagram:** -
P-Group: Commands | **Unit group:** - | **Unit selection:** -
Not for motor type: - | **Scaling:** - | **Expert list:** 1

Min	Max	Factory setting
-	-	0000 0000 0000 0000 0000 0000 0000 0000 bin

Description: Setting to invert the signals at the digital outputs.

Bit field:

Bit	Signal name	1 signal	0 signal	FP
08	DI/DO 8 (X132.1)	Inverted	Not inverted	2030
09	DI/DO 9 (X132.2)	Inverted	Not inverted	2030
10	DI/DO 10 (X132.3)	Inverted	Not inverted	2031
11	DI/DO 11 (X132.4)	Inverted	Not inverted	2031
16	DO 16 (X131.5)	Inverted	Not inverted	2032

Notice: If telegram 39x is set via p0922 in SINAMICS Integrated, the inversion of the output has no effect.

Note: DI/DO: Bidirectional Digital Input/Output

r0752 CO: CU analog input, input voltage actual / CU AI U_input act

CU_S110-DP, CU_S110-CAN, CU_S110-PN

Can be changed: - | **Calculated:** - | **Access level:** 1
Data type: FloatingPoint32 | **Dyn. index:** - | **Func. diagram:** 2040
P-Group: Terminals | **Unit group:** - | **Unit selection:** -
Not for motor type: - | **Scaling:** - | **Expert list:** 1

Min	Max	Factory setting
- [V]	- [V]	- [V]

Description: Displays the actual input voltage at the analog input.

Note: AI: Analog Input

p0753 CU analog input smoothing time constant / CU AI T_smooth

CU_S110-DP, CU_S110-CAN, CU_S110-PN

Can be changed: U, T | **Calculated:** - | **Access level:** 1
Data type: FloatingPoint32 | **Dyn. index:** - | **Func. diagram:** 2040
P-Group: Terminals | **Unit group:** - | **Unit selection:** -
Not for motor type: - | **Scaling:** - | **Expert list:** 1

Min	Max	Factory setting
0.0 [ms]	1000.0 [ms]	0.0 [ms]

Description: Sets the smoothing time constant of the 1st-order low pass filter for the analog input.

Note: AI: Analog Input

r0755 CO: CU analog input actual value in percent / CU AI value in %

CU_S110-DP, CU_S110-CAN, CU_S110-PN

Can be changed: - | **Calculated:** - | **Access level:** 1
Data type: FloatingPoint32 | **Dyn. index:** - | **Func. diagram:** 2040
P-Group: Terminals | **Unit group:** - | **Unit selection:** -
Not for motor type: - | **Scaling:** PERCENT | **Expert list:** 1

Min	Max	Factory setting
- [%]	- [%]	- [%]

Description: Displays the currently referred input value of the analog input.

When interconnected, the signals are referred to the reference quantities p200x and p205x.

Note: AI: Analog Input

p0756 CU analog input type / CU AI type

CU_S110-DP, CU_S110-CAN, CU_S110-PN

Can be changed: U, T	**Calculated:** -	**Access level:** 1
Data type: Integer16	**Dyn. index:** -	**Func. diagram:** 2040
P-Group: Terminals	**Unit group:** -	**Unit selection:** -
Not for motor type: -	**Scaling:** -	**Expert list:** 1
Min	**Max**	**Factory setting**
0	4	4

Description: Sets the type of the analog input.

Value:
0: Unipolar voltage input (0 V ... +10 V)
4: Bipolar voltage input (-10 V ... +10 V)

p0757 CU analog input characteristic value x1 / CU AI char x1

CU_S110-DP, CU_S110-CAN, CU_S110-PN

Can be changed: U, T	**Calculated:** -	**Access level:** 2
Data type: FloatingPoint32	**Dyn. index:** -	**Func. diagram:** 2040
P-Group: Terminals	**Unit group:** -	**Unit selection:** -
Not for motor type: -	**Scaling:** -	**Expert list:** 1
Min	**Max**	**Factory setting**
-11.000 [V]	11.000 [V]	0.000 [V]

Description: Sets the scaling characteristic for the analog input.
The scaling characteristic for the analog input is defined using 2 points.
This parameter specifies the x coordinate (input voltage in V) of the 1st value pair of the characteristic.

Note: The parameters for the characteristic do not have a limiting effect.

p0758 CU analog input characteristic value y1 / CU AI char y1

CU_S110-DP, CU_S110-CAN, CU_S110-PN

Can be changed: U, T	**Calculated:** -	**Access level:** 2
Data type: FloatingPoint32	**Dyn. index:** -	**Func. diagram:** 2040
P-Group: Terminals	**Unit group:** -	**Unit selection:** -
Not for motor type: -	**Scaling:** -	**Expert list:** 1
Min	**Max**	**Factory setting**
-1000.00 [%]	1000.00 [%]	0.00 [%]

Description: Sets the scaling characteristic for the analog input.
The scaling characteristic for the analog input is defined using 2 points.
This parameter specifies the y coordinate (percentage) of the 1st value pair of the characteristic.

Note: The parameters for the characteristic do not have a limiting effect.

p0759 CU analog input characteristic value x2 / CU AI char x2

CU_S110-DP, CU_S110-CAN, CU_S110-PN

Can be changed: U, T	**Calculated:** -	**Access level:** 2
Data type: FloatingPoint32	**Dyn. index:** -	**Func. diagram:** 2040
P-Group: Terminals	**Unit group:** -	**Unit selection:** -
Not for motor type: -	**Scaling:** -	**Expert list:** 1
Min	**Max**	**Factory setting**
-11.000 [V]	11.000 [V]	10.000 [V]

Description: Sets the scaling characteristic for the analog input.
The scaling characteristic for the analog input is defined using 2 points.
This parameter specifies the x coordinate (input voltage in V) of the 2nd value pair of the characteristic.

Note: The parameters for the characteristic do not have a limiting effect.

p0760 CU analog input characteristic value y2 / CU AI char y2

CU_S110-DP, CU_S110-CAN, CU_S110-PN

Can be changed: U, T	**Calculated:** -	**Access level:** 2
Data type: FloatingPoint32	**Dyn. index:** -	**Func. diagram:** 2040
P-Group: Terminals	**Unit group:** -	**Unit selection:** -
Not for motor type: -	**Scaling:** -	**Expert list:** 1
Min	**Max**	**Factory setting**
-1000.00 [%]	1000.00 [%]	100.00 [%]

Description: Sets the scaling characteristic for the analog input.
The scaling characteristic for the analog input is defined using 2 points.
This parameter specifies the y coordinate (percentage) of the 2nd value pair of the characteristic.

Note: The parameters for the characteristic do not have a limiting effect.

p0763 CU analog input offset / CU AI offset

CU_S110-DP, CU_S110-CAN, CU_S110-PN

Can be changed: U, T	**Calculated:** -	**Access level:** 2
Data type: FloatingPoint32	**Dyn. index:** -	**Func. diagram:** 2040
P-Group: Terminals	**Unit group:** -	**Unit selection:** -
Not for motor type: -	**Scaling:** -	**Expert list:** 1
Min	**Max**	**Factory setting**
-20.000 [V]	20.000 [V]	0.000 [V]

Description: Sets the offset for the analog input.
The offset is added to the input signal before the scaling characteristic.

p0766 CU analog input activate absolute value generation / CU AI absVal act

CU_S110-DP, CU_S110-CAN, CU_S110-PN

Can be changed: U, T	**Calculated:** -	**Access level:** 3
Data type: Integer16	**Dyn. index:** -	**Func. diagram:** 2040
P-Group: Terminals	**Unit group:** -	**Unit selection:** -
Not for motor type: -	**Scaling:** -	**Expert list:** 1
Min	**Max**	**Factory setting**
0	1	0

Description: Activates the absolute value generation of the analog input signal.

Value:
0: No absolute value generation
1: Absolute value generation switched in

p0767 BI: CU analog input signal source for inversion / CU AI inv S_src

CU_S110-DP, CU_S110-CAN, CU_S110-PN

Can be changed: U, T	**Calculated:** -	**Access level:** 3
Data type: Unsigned32 / Binary	**Dyn. index:** -	**Func. diagram:** 2040
P-Group: Terminals	**Unit group:** -	**Unit selection:** -
Not for motor type: -	**Scaling:** -	**Expert list:** 1
Min	**Max**	**Factory setting**
-	-	0

Description: Sets the signal source to invert the analog input signal.

p0768 CU analog input noise suppression window / CU AI window

CU_S110-DP, CU_S110-CAN, CU_S110-PN

Can be changed: U, T	**Calculated:** -	**Access level:** 3
Data type: FloatingPoint32	**Dyn. index:** -	**Func. diagram:** 2040
P-Group: Terminals	**Unit group:** -	**Unit selection:** -
Not for motor type: -	**Scaling:** -	**Expert list:** 1
Min	**Max**	**Factory setting**
0.00 [%]	20.00 [%]	0.00 [%]

Description: Sets the window for noise suppression of the analog input.
Changes less than the window are suppressed.

Note: AI: Analog Input

p0769 BI: CU analog input signal source for enable / CU AI enable

CU_S110-DP, CU_S110-CAN, CU_S110-PN

Can be changed: U, T	**Calculated:** -	**Access level:** 3
Data type: Unsigned32 / Binary	**Dyn. index:** -	**Func. diagram:** 2040
P-Group: Terminals	**Unit group:** -	**Unit selection:** -
Not for motor type: -	**Scaling:** -	**Expert list:** 1
Min	**Max**	**Factory setting**
-	-	1

Description: Sets the signal source to enable the analog input.

p0771[0...2] CI: Test sockets signal source / Test skt S_src

CU_S110-DP, CU_S110-CAN, CU_S110-PN

Can be changed: U, T	**Calculated:** -	**Access level:** 2
Data type: Unsigned32 / Integer16	**Dyn. index:** -	**Func. diagram:** 8134
P-Group: Terminals	**Unit group:** -	**Unit selection:** -
Not for motor type: -	**Scaling:** PERCENT	**Expert list:** 1
Min	**Max**	**Factory setting**
-	-	0

Description: Sets the signal source for the signal to be output at the test sockets.

Index:
[0] = T0
[1] = T1
[2] = Reserved

Dependency: Can only be set when p0776 = 99.
Refer to: r0772, r0774, p0776, p0777, p0778, p0779, p0780, p0783, p0784, r0786

r0772[0...2] Test sockets output signal / TestSktsSignalVal

CU_S110-DP, CU_S110-CAN, CU_S110-PN

Can be changed: -	**Calculated:** -	**Access level:** 2
Data type: FloatingPoint32	**Dyn. index:** -	**Func. diagram:** 8134
P-Group: Terminals	**Unit group:** -	**Unit selection:** -
Not for motor type: -	**Scaling:** -	**Expert list:** 1
Min	**Max**	**Factory setting**
- [%]	- [%]	- [%]

Description: Displays the actual value of the signal to be output.

Index:
[0] = T0
[1] = T1
[2] = Reserved

Dependency: Refer to: p0771, r0774, p0776, p0777, p0778, p0779, p0780, p0783, p0784, r0786

r0774[0...2] Test sockets output voltage / TestSkts U_output

CU_S110-DP, CU_S110-CAN, CU_S110-PN

Can be changed: -	**Calculated:** -	**Access level:** 2
Data type: FloatingPoint32	**Dyn. index:** -	**Func. diagram:** -
P-Group: Terminals	**Unit group:** -	**Unit selection:** -
Not for motor type: -	**Scaling:** -	**Expert list:** 1
Min	**Max**	**Factory setting**
- [V]	- [V]	- [V]

Description: Displays the actual output voltage for the test sockets.

Index:
[0] = T0
[1] = T1
[2] = Reserved

Dependency: Refer to: p0771, r0772, p0776, p0777, p0778, p0779, p0780, p0783, p0784, r0786

p0776[0...2] Test socket mode / Test skt mode

CU_S110-DP, CU_S110-CAN, CU_S110-PN

Can be changed: U, T	**Calculated:** -	**Access level:** 4
Data type: Integer16	**Dyn. index:** -	**Func. diagram:** 8134
P-Group: Terminals	**Unit group:** -	**Unit selection:** -
Not for motor type: -	**Scaling:** -	**Expert list:** 1
Min	**Max**	**Factory setting**
96	99	99

Description: Sets the mode for the test sockets.

Value:
96: Physical address (32-bit integer signal unsigned)
97: Physical address (32-bit integer signal)
98: Physical address (32-bit floating-point signal)
99: BICO signal

Index:
[0] = T0
[1] = T1
[2] = Reserved

Dependency: Refer to: p0771, r0772, r0774, p0777, p0778, p0779, p0780, p0783, p0784, r0786, p0788, p0789, r0790

p0777[0...2] Test socket characteristic value x1 / Test skt char x1

CU_S110-DP, CU_S110-CAN, CU_S110-PN

Can be changed: U, T	**Calculated:** -	**Access level:** 2
Data type: FloatingPoint32	**Dyn. index:** -	**Func. diagram:** 8134
P-Group: Terminals	**Unit group:** -	**Unit selection:** -
Not for motor type: -	**Scaling:** -	**Expert list:** 1
Min	**Max**	**Factory setting**
-100000.00 [%]	100000.00 [%]	0.00 [%]

Description: The scaling characteristic for the test sockets is defined using two points. This parameter specifies the x coordinate (percentage) of the first point on the characteristic.

Index:
[0] = T0
[1] = T1
[2] = Reserved

Dependency: Can only be set when p0776 = 99.
Refer to: p0778, p0779, p0780, r0786

Note: The value 0.00 % corresponds to 2.49 V.

p0778[0...2] Test socket characteristic value y1 / Test skt char y1

CU_S110-DP, CU_S110-CAN, CU_S110-PN

Can be changed: U, T	**Calculated:** -	**Access level:** 2
Data type: FloatingPoint32	**Dyn. index:** -	**Func. diagram:** 8134
P-Group: Terminals	**Unit group:** -	**Unit selection:** -
Not for motor type: -	**Scaling:** -	**Expert list:** 1
Min	**Max**	**Factory setting**
0.00 [V]	4.98 [V]	2.49 [V]

Description: The scaling characteristic for the test sockets is defined using two points. This parameter specifies the y coordinate (output voltage) of the first point on the characteristic.

Index:
[0] = T0
[1] = T1
[2] = Reserved

Dependency: Can only be set when p0776 = 99.
Refer to: p0777, p0779, p0780, r0786

p0779[0...2] Test socket characteristic value x2 / Test skt char x2

CU_S110-DP, CU_S110-CAN, CU_S110-PN

Can be changed: U, T	**Calculated:** -	**Access level:** 2
Data type: FloatingPoint32	**Dyn. index:** -	**Func. diagram:** 8134
P-Group: Terminals	**Unit group:** -	**Unit selection:** -
Not for motor type: -	**Scaling:** -	**Expert list:** 1
Min	**Max**	**Factory setting**
-100000.00 [%]	427.9E9 [%]	100.00 [%]

Description: The scaling characteristic for the test sockets is defined using two points. This parameter specifies the x coordinate (percentage) of the second point on the characteristic.

Index: [0] = T0
[1] = T1
[2] = Reserved

Dependency: Can only be set when p0776 = 99.
Refer to: p0777, p0778, p0780, r0786

Note: The value 100.00 % corresponds to 4.98 V.

p0780[0...2] Test socket characteristic value y2 / Test skt char y2

CU_S110-DP, CU_S110-CAN, CU_S110-PN

Can be changed: U, T	**Calculated:** -	**Access level:** 2
Data type: FloatingPoint32	**Dyn. index:** -	**Func. diagram:** 8134
P-Group: Terminals	**Unit group:** -	**Unit selection:** -
Not for motor type: -	**Scaling:** -	**Expert list:** 1
Min	**Max**	**Factory setting**
0.00 [V]	4.98 [V]	4.98 [V]

Description: The scaling characteristic for the test sockets is defined using two points. This parameter specifies the y coordinate (output voltage) of the second point on the characteristic.

Index: [0] = T0
[1] = T1
[2] = Reserved

Dependency: Can only be set when p0776 = 99.
Refer to: p0777, p0778, p0779, r0786

p0783[0...2] Test sockets offset / Test skt offset

CU_S110-DP, CU_S110-CAN, CU_S110-PN

Can be changed: U, T	**Calculated:** -	**Access level:** 2
Data type: FloatingPoint32	**Dyn. index:** -	**Func. diagram:** 8134
P-Group: Terminals	**Unit group:** -	**Unit selection:** -
Not for motor type: -	**Scaling:** -	**Expert list:** 1
Min	**Max**	**Factory setting**
-4.60 [V]	4.60 [V]	0.00 [V]

Description: Sets an additional offset for the test sockets.

Index: [0] = T0
[1] = T1
[2] = Reserved

p0784[0...2] Test socket limit on/off / TestSktLim on/off

CU_S110-DP, CU_S110-CAN, CU_S110-PN

Can be changed: U, T	**Calculated:** -	**Access level:** 2
Data type: Integer16	**Dyn. index:** -	**Func. diagram:** 8134
P-Group: Terminals	**Unit group:** -	**Unit selection:** -
Not for motor type: -	**Scaling:** -	**Expert list:** 1
Min	**Max**	**Factory setting**
0	1	0

Description: Sets the limit for a signal to be output via test sockets.

Value: 0: Limiting off
1: Limiting on

Index: [0] = T0
[1] = T1
[2] = Reserved

Note: Limiting on:
If signals are output outside the permissible measuring range, the signal is limited to 4.98 V or to 0 V.
Limiting off:
If signals are output outside the permissible measuring range, this causes signal overflow. In the case of signal overflow, the signal jumps from 0 V to 4.98 V or from 4.98 V to 0 V.

r0786[0...2] Test socket scaling per volt / TestSktScale/Volt

CU_S110-DP, CU_S110-CAN, CU_S110-PN

Can be changed: -	**Calculated:** -	**Access level:** 2
Data type: FloatingPoint32	**Dyn. index:** -	**Func. diagram:** 8134
P-Group: Terminals	**Unit group:** -	**Unit selection:** -
Not for motor type: -	**Scaling:** -	**Expert list:** 1
Min	**Max**	**Factory setting**
-	-	-

Description: Displays the scaling of the signal to be output. A change in the output voltage by 1 volt corresponds to the value in this parameter. The units are determined by the interconnected test signal.

Index: [0] = T0
[1] = T1
[2] = Reserved

Dependency: Refer to: p0771, r0772, r0774, p0777, p0778, p0779, p0780, p0783, p0784

Note: Example:
r0786[0] = 1500.0 and the measuring signal is r0063 (CO: Actual speed smoothed [rpm]).
A change of 1 V at the output of test socket T0 corresponds to 1500.0 [rpm].

p0788[0...2] Test sockets physical address / Test skt PhyAddr

CU_S110-DP, CU_S110-CAN, CU_S110-PN

Can be changed: U, T	**Calculated:** -	**Access level:** 4
Data type: Unsigned32	**Dyn. index:** -	**Func. diagram:** -
P-Group: Terminals	**Unit group:** -	**Unit selection:** -
Not for motor type: -	**Scaling:** -	**Expert list:** 1
Min	**Max**	**Factory setting**
0000 bin	1111 1111 1111 1111 1111 1111 1111 1111 bin	0000 bin

Description: Sets the physical address to output signals via the test sockets.

Index: [0] = T0
[1] = T1
[2] = Reserved

Dependency: Changes only become effective if p0776 does not equal 99.
Refer to: p0789, r0790

p0789[0...2] Test sockets physical address gain / TestSktPhyAddrGain

CU_S110-DP, CU_S110-CAN, CU_S110-PN

Can be changed: U, T	**Calculated:** -	**Access level:** 4
Data type: FloatingPoint32	**Dyn. index:** -	**Func. diagram:** -
P-Group: Terminals	**Unit group:** -	**Unit selection:** -
Not for motor type: -	**Scaling:** -	**Expert list:** 1
Min	**Max**	**Factory setting**
-340.28235E36	340.28235E36	1.00000

Description: Sets the gain of a signal output of a physical address via test sockets.

Index: [0] = T0
[1] = T1
[2] = Reserved

Dependency: Changes only become effective if p0776 does not equal 99.
Refer to: p0788

r0790[0...2] Test sockets physical address signal value / TestSktsPhyAddrVal

CU_S110-DP, CU_S110-CAN, CU_S110-PN

Can be changed: -	**Calculated:** -	**Access level:** 4
Data type: Unsigned32	**Dyn. index:** -	**Func. diagram:** -
P-Group: Terminals	**Unit group:** -	**Unit selection:** -
Not for motor type: -	**Scaling:** -	**Expert list:** 1
Min	**Max**	**Factory setting**
-	-	-

Description: Displays the actual value of a signal determined via a physical address.

Index: [0] = T0
[1] = T1
[2] = Reserved

Dependency: Only effective when p0776 = 97 or p0776 = 96.
Refer to: p0788

p0795 CU digital inputs simulation mode / CU DI simulation

CU_S110-DP, CU_S110-CAN, CU_S110-PN

Can be changed: U, T	**Calculated:** -	**Access level:** 2
Data type: Unsigned32	**Dyn. index:** -	**Func. diagram:** 1510, 2020, 2030, 2031, 2100, 2120, 2130, 2131, 2132, 2133
P-Group: Commands	**Unit group:** -	**Unit selection:** -
Not for motor type: -	**Scaling:** -	**Expert list:** 1
Min	**Max**	**Factory setting**
-	-	0000 0000 0000 0000 0000 0000 0000 0000 bin

Description: Sets the simulation mode for digital inputs.

Bit field:

Bit	Signal name	1 signal	0 signal	FP
00	DI 0 (X133.1)	Simulation	Terminal eval	-
01	DI 1 (X133.2)	Simulation	Terminal eval	-
02	DI 2 (X133.3)	Simulation	Terminal eval	-
03	DI 3 (X133.4)	Simulation	Terminal eval	-
08	DI/DO 8 (X132.1)	Simulation	Terminal eval	-
09	DI/DO 9 (X132.2)	Simulation	Terminal eval	-
10	DI/DO 10 (X132.3)	Simulation	Terminal eval	-
11	DI/DO 11 (X132.4)	Simulation	Terminal eval	-
16	DI 16 (X130.1)	Simulation	Terminal eval	-
17	DI 17 (X130.2)	Simulation	Terminal eval	-
18	DI 18 (X130.4)	Simulation	Terminal eval	-
19	DI 19 (X130.5)	Simulation	Terminal eval	-
20	DI 20 (X131.1)	Simulation	Terminal eval	-
21	DI 21 (X131.2)	Simulation	Terminal eval	-
22	DI 22 (X131.4)	Simulation	Terminal eval	-

Dependency: The setpoint for the input signals is specified using p0796.
Refer to: p0796

Notice: If a digital input is used as signal source for the function "STO" (BI: p9620) then it is not permissible to select the simulation mode and this is rejected.

Note: This parameter is not saved when data is backed-up (p0971, p0977).
DI: Digital Input
DI/DO: Bidirectional Digital Input/Output

p0796 CU digital inputs simulation mode setpoint / CU DI simul setp

CU_S110-DP, CU_S110-CAN, CU_S110-PN

Can be changed: U, T | **Calculated:** - | **Access level:** 2
Data type: Unsigned32 | **Dyn. index:** - | **Func. diagram:** 1510, 2020, 2030, 2031, 2100, 2120, 2130, 2131, 2132, 2133
P-Group: Commands | **Unit group:** - | **Unit selection:** -
Not for motor type: - | **Scaling:** - | **Expert list:** 1

Min	Max	Factory setting
-	-	0000 0000 0000 0000 0000 0000 0000 0000 bin

Description: Sets the setpoint for the input signals in the digital input simulation mode.

Bit field:

Bit	Signal name	1 signal	0 signal	FP
00	DI 0 (X133.1)	High	Low	-
01	DI 1 (X133.2)	High	Low	-
02	DI 2 (X133.3)	High	Low	-
03	DI 3 (X133.4)	High	Low	-
08	DI/DO 8 (X132.1)	High	Low	-
09	DI/DO 9 (X132.2)	High	Low	-
10	DI/DO 10 (X132.3)	High	Low	-
11	DI/DO 11 (X132.4)	High	Low	-
16	DI 16 (X130.1)	High	Low	-
17	DI 17 (X130.2)	High	Low	-
18	DI 18 (X130.4)	High	Low	-
19	DI 19 (X130.5)	High	Low	-
20	DI 20 (X131.1)	High	Low	-
21	DI 21 (X131.2)	High	Low	-
22	DI 22 (X131.4)	High	Low	-

Dependency: The simulation of a digital input is selected using p0795.
Refer to: p0795

Notice: To the terminal designation:
The first designation is valid for CU320, the second for CU310.

Note: This parameter is not saved when data is backed-up (p0971, p0977).
DI: Digital Input
DI/DO: Bidirectional Digital Input/Output

p0797 CU analog input simulation mode / CU AI sim_mode

CU_S110-DP, CU_S110-CAN, CU_S110-PN

Can be changed: U, T | **Calculated:** - | **Access level:** 2
Data type: Integer16 | **Dyn. index:** - | **Func. diagram:** -
P-Group: Terminals | **Unit group:** - | **Unit selection:** -
Not for motor type: - | **Scaling:** - | **Expert list:** 1

Min	Max	Factory setting
0	1	0

Description: Sets the simulation mode for the analog input.

Value:
0: No simulation mode for analog input x
1: Simulation mode for analog input x

Dependency: The setpoint for the input voltage is specified via p0798.
Refer to: p0798

Note: This parameter is not saved when data is backed-up (p0971, p0977).
AI: Analog Input

p0798 CU analog input simulation mode setpoint / CU AI sim setp

CU_S110-DP, CU_S110-CAN, CU_S110-PN

Can be changed: U, T	**Calculated:** -	**Access level:** 2
Data type: FloatingPoint32	**Dyn. index:** -	**Func. diagram:** -
P-Group: Terminals	**Unit group:** -	**Unit selection:** -
Not for motor type: -	**Scaling:** -	**Expert list:** 1
Min	**Max**	**Factory setting**
-20.000 [V]	20.000 [V]	0.000 [V]

Description: Sets the setpoint for the input value in the simulation mode of the analog input.

Dependency: The simulation of an analog input is selected using p797.
If AI is parameterized as voltage input (p756), then the setpoint is a voltage in V.
If AI is parameterized as current input (p756), then the setpoint is current in mA.
Refer to: p0756, p0797

Note: This parameter is not saved when data is backed-up (p0971, p0977).
AI: Analog Input

p0799[0...2] CU inputs/outputs sampling time / CU I/O t_sampl

CU_S110-DP, CU_S110-CAN, CU_S110-PN

Can be changed: C1(3)	**Calculated:** -	**Access level:** 3
Data type: FloatingPoint32	**Dyn. index:** -	**Func. diagram:** 2020, 2030, 2031
P-Group: Commands	**Unit group:** -	**Unit selection:** -
Not for motor type: -	**Scaling:** -	**Expert list:** 1
Min	**Max**	**Factory setting**
1000.00 [µs]	5000.00 [µs]	4000.00 [µs]

Description: Sets the sampling time for the inputs and outputs of the Control Unit.

Index: [0] = Digital inputs/outputs (DI/DO)
[1] = Analog inputs (AI)
[2] = Not available - analog outputs (AO)

Dependency: The parameter can only be modified for p0009 = 3, 29.
Refer to: p0009

Note: The changed sampling time is immediately effective after a completed sub-boot (p0009 -> 0).

p0802 Data transfer: memory card as source/target / mem_card src/targ

CU_S110-DP, CU_S110-CAN, CU_S110-PN

Can be changed: T	**Calculated:** -	**Access level:** 3
Data type: Integer16	**Dyn. index:** -	**Func. diagram:** -
P-Group: -	**Unit group:** -	**Unit selection:** -
Not for motor type: -	**Scaling:** -	**Expert list:** 1
Min	**Max**	**Factory setting**
0	100	0

Description: Sets the number for data transfer of a parameter backup from/to memory card.
Transfer from memory card to device memory (p0804 = 1):
- Sets the source of parameter backup (e.g. p0802 = 48 --> PS048xxx.ACX is the source).
Transfer from non-volatile device memory to memory card (p0804 = 2):
- Sets the target of parameter backup (e.g. p0802 = 23 --> PS023xxx.ACX is the target).
No setting is required for the transfer of the communication configuration (p0804 = 12).

Dependency: Refer to: p0803, p0804

Notice: If the data between the volatile and non-volatile device memories differ, then it may be necessary to save the data on the memory card in a non-volatile fashion prior to the transfer (e.g. p0971 = 1).

p0803 Data transfer: device memory as source/target / Dev_mem src/targ

CU_S110-DP, CU_S110-CAN, CU_S110-PN

Can be changed: T	**Calculated:** -	**Access level:** 3
Data type: Integer16	**Dyn. index:** -	**Func. diagram:** -
P-Group: -	**Unit group:** -	**Unit selection:** -
Not for motor type: -	**Scaling:** -	**Expert list:** 1
Min	**Max**	**Factory setting**
0	12	0

Description: Sets the number for data transfer of a parameter backup from/to device memory.

Transfer from memory card to device memory (p0804 = 1):

- Sets the target of the parameter backup (e.g. p0803 = 10 --> PS010xxx.ACX is the target).

Transfer from non-volatile device memory to memory card (p0804 = 2):

- Sets the source of the parameter backup (e.g. p0803 = 11 --> PS011xxx.ACX is the source).

No setting is required for the transfer of the communication configuration (p0804 = 12).

Value:
0: Source/target standard
10: Source/target with setting 10
11: Source/target with setting 11
12: Source/target with setting 12

Dependency: Refer to: p0802, p0804

Notice: If the data between the volatile and non-volatile device memories differ, then it may be necessary to save the data on the memory card in a non-volatile fashion prior to the transfer (e.g. p0971 = 1).

p0804 Data transfer start / Data transf start

CU_S110-DP, CU_S110-CAN, CU_S110-PN

Can be changed: T	**Calculated:** -	**Access level:** 3
Data type: Integer16	**Dyn. index:** -	**Func. diagram:** -
P-Group: -	**Unit group:** -	**Unit selection:** -
Not for motor type: -	**Scaling:** -	**Expert list:** 1
Min	**Max**	**Factory setting**
0	1100	0

Description: Sets the transfer direction and start of data transfer between the memory card and non-volatile device memory.

Example 1:

The parameter backup is to be transferred from the device memory to the memory card with setting 0. The parameter backup is to be stored on the memory card with setting 22.

p0802 = 22 (parameter backup stored on memory card as target with setting 22)

p0803 = 0 (parameter backup stored in device memory as source with setting 0)

p0804 = 2 (start data transfer from device memory to memory card)

--> PS000xxx.ACX is transferred from device memory to memory card and stored as PS022xxx.ACX.

Example 2:

The parameter backup is to be transferred from the memory card to the device memory with setting 22. The parameter backup is to be stored in the device memory as setting 0.

p0802 = 22 (parameter backup stored on memory card as source with setting 22)

p0803 = 0 (parameter backup stored in device memory as target with setting 0)

p0804 = 1 (start data transfer from memory card to device memory)

--> PS022xxx.ACX is transferred from memory card to device memory and stored as PS000xxx.ACX.

Example 3:

The communication configuration is to be transferred from the device memory to the memory card.

p0802 = (not relevant)

p0803 = (not relevant)

p0804 = 12 (start data transfer from device memory to memory card)

--> The files that are relevant for the communication configuration are transferred from the device memory to the memory card and stored in the /SIEMENS/SINAMICS/DATA/CFG directory.

Value:
0: Inactive
1: Memory card to device memory
2: Device memory to memory card
12: Device memory (communication configuration) to memory card
1001: File on memory card cannot be opened

1002: File in device memory cannot be opened
1003: Memory card not found
1100: File cannot be transferred

Dependency: Refer to: p0802, p0803

Notice: The memory card must not be removed while data is being transferred.

Note: If a parameter backup with setting 0 is detected on the memory card when the Control Unit is switched on (PS000xxx.ACX), this is transferred automatically to the device memory.

When the memory card is inserted, a parameter backup with setting 0 (PS000xxx.ACX) is automatically written to the memory card when the parameters are saved in a non-volatile memory (e.g. by means of "Copy RAM to ROM").

Once the data has been successfully transferred, this parameter is automatically reset to 0. If an error occurs, the parameter is set to a value > 1000. Possible fault causes:

p0804 = 1001:

The parameter backup set in p0802 as the source on the memory card does not exist or there is not sufficient memory space available on the memory card.

p0804 = 1002:

The parameter backup set in p0803 as the source in the device memory does not exist or there is not sufficient memory space available in the device memory.

p0804 = 1003:

No memory card has been inserted.

p0806 BI: Inhibit master control / PcCtrl inhibit

SERVO_S110-DP, SERVO_S110-CAN, SERVO_S110-PN

Can be changed: T	**Calculated:** -	**Access level:** 3
Data type: Unsigned32 / Binary	**Dyn. index:** -	**Func. diagram:** -
P-Group: Commands	**Unit group:** -	**Unit selection:** -
Not for motor type: -	**Scaling:** -	**Expert list:** 1
Min	**Max**	**Factory setting**
-	-	0

Description: Sets the signal source to block the master control.

Dependency: Refer to: r0807

Note: The master control is used from the commissioning software (drive control panel) and from the Advanced Operator Panel (AOP, LOCAL mode).

r0807.0 BO: Master control active / PcCtrl active

SERVO_S110-DP, SERVO_S110-CAN, SERVO_S110-PN

Can be changed: -	**Calculated:** -	**Access level:** 2
Data type: Unsigned8	**Dyn. index:** -	**Func. diagram:** -
P-Group: Displays, signals	**Unit group:** -	**Unit selection:** -
Not for motor type: -	**Scaling:** -	**Expert list:** 1
Min	**Max**	**Factory setting**
-	-	-

Description: Displays what has the master control.

The drive can be controlled via the BICO interconnection or from external (e.g. the commissioning software).

Bit field:

Bit	Signal name	1 signal	0 signal	FP
00	Master control active	Yes	No	5030, 6031

Dependency: Refer to: p0806

Notice: The master control only influences control word 1 and speed setpoint 1. Other control words/setpoints can be transferred from another automation device.

Note: Bit 0 = 0: BICO interconnection active

Bit 0 = 1: Master control for PC/AOP

The master control is used from the commissioning software (drive control panel) and from the Advanced Operator Panel (AOP, LOCAL mode).

p0809[0...2] Copy Command Data Set CDS / Copy CDS

SERVO_S110-DP, SERVO_S110-CAN, SERVO_S110-PN

Can be changed: T	**Calculated:** -	**Access level:** 2
Data type: Unsigned8	**Dyn. index:** -	**Func. diagram:** 8560
P-Group: Commands	**Unit group:** -	**Unit selection:** -
Not for motor type: -	**Scaling:** -	**Expert list:** 1
Min	**Max**	**Factory setting**
0	1	0

Description: Copies one Command Data Set (CDS) into another.

Index: [0] = Source Command Data Set
[1] = Target Command Data Set
[2] = Start copying procedure

Note: Procedure:
1. In Index 0, enter which command data set should be copied.
2. In Index 1, enter the command data set that is to be copied into.
3. Start copying: Set index 2 from 0 to 1.
p0809[2] is automatically set to 0 when copying is completed.

p0810 BI: Command data set selection CDS bit 0 / CDS select., bit 0

SERVO_S110-DP, SERVO_S110-CAN, SERVO_S110-PN

Can be changed: T	**Calculated:** -	**Access level:** 3
Data type: Unsigned32 / Binary	**Dyn. index:** -	**Func. diagram:** 8560
P-Group: Commands	**Unit group:** -	**Unit selection:** -
Not for motor type: -	**Scaling:** -	**Expert list:** 1
Min	**Max**	**Factory setting**
-	-	0

Description: Sets the signal source to select the Command Data Set bit 0 (CDS bit 0).

Dependency: Refer to: r0050, r0836

Notice: The parameter may be protected as a result of p0922 or p2079 and cannot be changed.

Note: The Command Data Set selected using the binector inputs is displayed in r0836.
The currently effective command data set is displayed in r0050.
A Command Data Set can be copied using p0809.

p0819[0...2] Copy Drive Data Set DDS / Copy DDS

SERVO_S110-DP, SERVO_S110-CAN, SERVO_S110-PN

Can be changed: C2(15)	**Calculated:** -	**Access level:** 2
Data type: Unsigned8	**Dyn. index:** -	**Func. diagram:** 8565
P-Group: Data sets	**Unit group:** -	**Unit selection:** -
Not for motor type: -	**Scaling:** -	**Expert list:** 1
Min	**Max**	**Factory setting**
0	31	0

Description: Copies one Drive Data Set (DDS) into another.

Index: [0] = Source Drive Data Set
[1] = Target Drive Data Set
[2] = Start copying procedure

Note: Procedure:
1. In Index 0, enter which drive data set is to be copied.
2. In Index 1, enter the drive data set data that is to be copied into.
3. Start copying: Set index 2 from 0 to 1.
p0819[2] is automatically set to 0 when copying is completed.

p0820[0...n] BI: Drive Data Set selection DDS bit 0 / DDS select., bit 0

SERVO_S110-DP, SERVO_S110-CAN, SERVO_S110-PN

Can be changed: C2(15), T	**Calculated:** -	**Access level:** 3
Data type: Unsigned32 / Binary	**Dyn. index:** CDS, p0170	**Func. diagram:** 8565, 8575
P-Group: Data sets	**Unit group:** -	**Unit selection:** -
Not for motor type: -	**Scaling:** -	**Expert list:** 1
Min	**Max**	**Factory setting**
-	-	0

Description: Sets the signal source to select the Drive Data Set, bit 0 (DDS, bit 0).
Dependency: Refer to: r0051, r0837
Notice: The parameter may be protected as a result of p0922 or p2079 and cannot be changed.

p0826[0...n] Motor changeover motor number / Mot_chng mot No.

SERVO_S110-DP, SERVO_S110-CAN, SERVO_S110-PN

Can be changed: C2(3)	**Calculated:** -	**Access level:** 2
Data type: Unsigned16	**Dyn. index:** MDS, p0130	**Func. diagram:** 8575
P-Group: Motor	**Unit group:** -	**Unit selection:** -
Not for motor type: -	**Scaling:** -	**Expert list:** 1
Min	**Max**	**Factory setting**
0	15	0

Description: Sets the freely-assignable motor number for the motor changeover.
Dependency: Refer to: p0827
Caution: When changing over motor data sets with the same motor number (e.g. star-delta changeover) and for a motor with brake, the motor brake remains open during the changeover.
Note: When the motor data sets are changed over, the following applies:
The same motor number signifies the same thermal model.

p0827[0...n] Motor changeover status word bit number / Mot_chg ZSW bitNo.

SERVO_S110-DP, SERVO_S110-CAN, SERVO_S110-PN

Can be changed: C2(3)	**Calculated:** -	**Access level:** 2
Data type: Unsigned16	**Dyn. index:** MDS, p0130	**Func. diagram:** 8575
P-Group: Motor	**Unit group:** -	**Unit selection:** -
Not for motor type: -	**Scaling:** -	**Expert list:** 1
Min	**Max**	**Factory setting**
0	15	0

Description: Sets the bit number for every motor data set.
Example:
p0827[0] = 0: For MDS0, r0830.0 is switched.
p0827[1] = 5: For MDS1, r0830.5 is switched.
Dependency: Refer to: p0826, r0830
Note: A motor is only changed over (a new motor selected) after the pulses have been suppressed.
When the motor data sets are changed over, the following applies:
Bit numbers that are not identical, signify that the motor must be changed over.

p0828[0...n] BI: Motor changeover feedback signal / Mot_chng fdbk sig

SERVO_S110-DP, SERVO_S110-CAN, SERVO_S110-PN

Can be changed: C2(3), T	**Calculated:** -	**Access level:** 3
Data type: Unsigned32 / Binary	**Dyn. index:** CDS, p0170	**Func. diagram:** 8575
P-Group: Motor	**Unit group:** -	**Unit selection:** -
Not for motor type: -	**Scaling:** -	**Expert list:** 1
Min	**Max**	**Factory setting**
-	-	0

Description: Sets the signal source for the feedback signal when changing over the motor.
For p0833.0 = 1 the following applies:
This feedback signal (0/1 edge) is required after a motor changeover to enable the pulses.
Dependency: Refer to: p0833

Notice: The parameter may be protected as a result of p0922 or p2079 and cannot be changed.

r0830.0...15 CO/BO: Motor changeover status word / Mot_chngov ZSW

SERVO_S110-DP, SERVO_S110-CAN, SERVO_S110-PN

Can be changed: -	**Calculated:** -	**Access level:** 2
Data type: Unsigned16	**Dyn. index:** -	**Func. diagram:** 8575
P-Group: Displays, signals	**Unit group:** -	**Unit selection:** -
Not for motor type: -	**Scaling:** -	**Expert list:** 1
Min	**Max**	**Factory setting**
-	-	-

Description: Displays the status word of the motor changeover.

These signals can be connected to digital outputs to change over the motor.

Bit field:

Bit	Signal name	1 signal	0 signal	FP
00	Motor selection bit 0	High	Low	-
01	Motor selection bit 1	High	Low	-
02	Motor selection bit 2	High	Low	-
03	Motor selection bit 3	High	Low	-
04	Motor selection bit 4	High	Low	-
05	Motor selection bit 5	High	Low	-
06	Motor selection bit 6	High	Low	-
07	Motor selection bit 7	High	Low	-
08	Motor selection bit 8	High	Low	-
09	Motor selection bit 9	High	Low	-
10	Motor selection bit 10	High	Low	-
11	Motor selection bit 11	High	Low	-
12	Motor selection bit 12	High	Low	-
13	Motor selection bit 13	High	Low	-
14	Motor selection bit 14	High	Low	-
15	Motor selection bit 15	High	Low	-

Dependency: Refer to: p0827

p0831[0...15] BI: Motor changeover contactor feedback / Mot_chg cont fdbk

SERVO_S110-DP, SERVO_S110-CAN, SERVO_S110-PN

Can be changed: U, T	**Calculated:** -	**Access level:** 3
Data type: Unsigned32 / Binary	**Dyn. index:** -	**Func. diagram:** 8575
P-Group: Motor	**Unit group:** -	**Unit selection:** -
Not for motor type: -	**Scaling:** -	**Expert list:** 1
Min	**Max**	**Factory setting**
-	-	0

Description: Sets the signal source for the feedback signal of the contactors when changing over motors.

There is a fixed inter-relationship between energizing the contactor and the feedback signal.

Example:

A changeover is to be made between MDS0 (motor 0) and MDS1 (motor 1). The contactors should be switched using bit 4 (contactor 0) and 5 (contactor 1). The changeover should be made with an interconnection of the feedback signal.

Implementation:

MDS0: p0827[0] = 4, interconnect output to switch contactor 0 to r0830.4, p0831[4] = "input, feedback signal, contactor 0"

MDS1: p0827[1] = 5, interconnect output to switch contactor 1 to r0830.5, p0831[5] = "input, feedback signal, contactor 1"

The following sequence applies when changing over from MDS0 to MDS1:

1. The status bit r0830.4 is deleted. When the feedback signal (p0831[4]) is connected, the system waits until the feedback signal "contactor open" is displayed. If the feedback signal is not connected, then the system waits for the switch-off interlocking time of 320 ms.

2. The status bit r0830.5 is set. If the feedback signal (p0831[5]) is connected, the system waits until the feedback signal "contactor closed" is displayed. If the feedback signal is not connected, then the system waits for the switch-on interlocking time of 160 ms.

Index:
[0] = Feedback signal contactor 0
[1] = Feedback signal contactor 1
[2] = Feedback signal contactor 2
[3] = Feedback signal contactor 3
[4] = Feedback signal contactor 4
[5] = Feedback signal contactor 5
[6] = Feedback signal contactor 6
[7] = Feedback signal contactor 7
[8] = Feedback signal contactor 8
[9] = Feedback signal contactor 9
[10] = Feedback signal contactor 10
[11] = Feedback signal contactor 11
[12] = Feedback signal contactor 12
[13] = Feedback signal contactor 13
[14] = Feedback signal contactor 14
[15] = Feedback signal contactor 15

r0832.0...15 CO/BO: Mot. changeover contactor feedback sig. status word / Mot_chng fdbk ZSW

SERVO_S110-DP, SERVO_S110-CAN, SERVO_S110-PN

Can be changed: -	**Calculated:** -	**Access level:** 2
Data type: Unsigned32	**Dyn. index:** -	**Func. diagram:** 8575
P-Group: Displays, signals	**Unit group:** -	**Unit selection:** -
Not for motor type: -	**Scaling:** -	**Expert list:** 1
Min	**Max**	**Factory setting**
-	-	-

Description: Displays the status word of the contactor feedback signals when changing over a motor.

Bit field:

Bit	Signal name	1 signal	0 signal	FP
00	Feedback signal contactor 0	Closed	Opened	-
01	Feedback signal contactor 1	Closed	Opened	-
02	Feedback signal contactor 2	Closed	Opened	-
03	Feedback signal contactor 3	Closed	Opened	-
04	Feedback signal contactor 4	Closed	Opened	-
05	Feedback signal contactor 5	Closed	Opened	-
06	Feedback signal contactor 6	Closed	Opened	-
07	Feedback signal contactor 7	Closed	Opened	-
08	Feedback signal contactor 8	Closed	Opened	-
09	Feedback signal contactor 9	Closed	Opened	-
10	Feedback signal contactor 10	Closed	Opened	-
11	Feedback signal contactor 11	Closed	Opened	-
12	Feedback signal contactor 12	Closed	Opened	-
13	Feedback signal contactor 13	Closed	Opened	-
14	Feedback signal contactor 14	Closed	Opened	-
15	Feedback signal contactor 15	Closed	Opened	-

Dependency: Refer to: p0831

p0833 Data set changeover configuration / DS_chng config

SERVO_S110-DP, SERVO_S110-CAN, SERVO_S110-PN

Can be changed: C2(15)	**Calculated:** -	**Access level:** 2
Data type: Unsigned16	**Dyn. index:** -	**Func. diagram:** 8575
P-Group: Data sets	**Unit group:** -	**Unit selection:** -
Not for motor type: -	**Scaling:** -	**Expert list:** 1
Min	**Max**	**Factory setting**
-	-	0000 bin

Description: Sets the configuration for the motor and encoder changeover.

Bit field:

Bit	Signal name	1 signal	0 signal	FP
00	Contactor changeover from the application/drive	application	Drive	-
01	Pulse suppression by application/drive	application	Drive	-
02	Suppress drive parking for EDS changeover	Yes	No	-

Note: Re bit 00:
When the bit is set and the motor has to be changed over, then p0827 must be set differently in the appropriate motor data sets.
Re bit 02:
The bit defines whether, for an EDS changeover, the status signal Gn_ZSW.14 is suppressed (parking encoder active).

r0835.0...11 CO/BO: Data set changeover status word / DDS_ZSW

SERVO_S110-DP, SERVO_S110-CAN, SERVO_S110-PN

Can be changed: -	**Calculated:** -	**Access level:** 2
Data type: Unsigned16	**Dyn. index:** -	**Func. diagram:** 8575
P-Group: Displays, signals	**Unit group:** -	**Unit selection:** -
Not for motor type: -	**Scaling:** -	**Expert list:** 1
Min	**Max**	**Factory setting**
-	-	-

Description: Displays the status word for the drive data set changeover.

Bit field:

Bit	Signal name	1 signal	0 signal	FP
00	Motor changeover active	Yes	No	8575
01	Encoder changeover active	Yes	No	-
02	Internal parameter calculation active	Yes	No	-
04	Armature short circuit active	Yes	No	-
05	Identification running	Yes	No	-
06	Friction characteristic record running	Yes	No	-
07	Rotating measurement running	Yes	No	-
08	Motor data identification running	Yes	No	-
10	Wait for pulse suppression	Yes	No	-
11	Wait for motor changeover feedback signal	Yes	No	-

Note: This parameter is only supplied with up-to-date values if data set changeover has been selected or is running.
Re bit 00:
The signal is only influenced when a motor changeover is set via p0827 (unequal bit numbers).
Re bit 01:
The signal is only influenced when an encoder changeover is set via p0187 or p0188.
Re bit 02:
A data set changeover is delayed by the time required for the internal parameter calculation.
Re bit 04:
A data set changeover is only carried out when the armature short circuit is not activated.
Re bit 05:
A data set changeover is only carried out when pole position identification, encoder adjustment, motor data identification, and rotating measurement are not running.
Re bit 06:
A data set changeover is only carried out when the friction characteristic record is not running.
Re bit 07 (VECTOR only):
A data set changeover is only carried out when rotating measurement is not running.
Re bit 08 (VECTOR only):
A data set changeover is only carried out when motor data identification is not running.
Re bit 10:
A motor changeover is set with p0833.1 = 1. It can only be carried out when the application performs pulse suppression.
Re bit 11:
A motor changeover is set with p0833.0 = 1. The pulses are only enabled when the "Motor changeover feedback" signal is detected.

r0836.0...1 CO/BO: Command Data Set CDS selected / CDS selected

SERVO_S110-DP, SERVO_S110-CAN, SERVO_S110-PN

Can be changed: -	**Calculated:** -	**Access level:** 2
Data type: Unsigned8	**Dyn. index:** -	**Func. diagram:** 1530, 8560
P-Group: Displays, signals	**Unit group:** -	**Unit selection:** -
Not for motor type: -	**Scaling:** -	**Expert list:** 1
Min	**Max**	**Factory setting**
-	-	-

Description: Displays the command data set (CDS) selected via the binector input.

Bit field:

Bit	Signal name	1 signal	0 signal	FP
00	CDS select. bit 0	ON	OFF	-
01	CDS select. bit 1	ON	OFF	-

Dependency: Refer to: r0050, p0810

Note: Command data sets are selected via binector input p0810 and following.
The currently effective command data set is displayed in r0050.

r0837.0...1 CO/BO: Drive Data Set DDS selected / DDS selected

SERVO_S110-DP, SERVO_S110-CAN, SERVO_S110-PN

Can be changed: -	**Calculated:** -	**Access level:** 2
Data type: Unsigned8	**Dyn. index:** -	**Func. diagram:** 8565
P-Group: Displays, signals	**Unit group:** -	**Unit selection:** -
Not for motor type: -	**Scaling:** -	**Expert list:** 1
Min	**Max**	**Factory setting**
-	-	-

Description: Displays the drive data set (DDS) selected via the binector input.

Bit field:

Bit	Signal name	1 signal	0 signal	FP
00	DDS select. bit 0	ON	OFF	-
01	DDS select. bit 1	ON	OFF	-

Dependency: Refer to: r0051, p0820

Note: Drive data sets are selected via binector input p0820 and following.
The currently effective drive data set is displayed in r0051.
If there is only one data set, then a value of 0 is displayed in this parameter and not the selection via binector inputs.

r0838[0...3] Motor/Encoder Data Set selected / MDS/EDS selected

SERVO_S110-DP, SERVO_S110-CAN, SERVO_S110-PN

Can be changed: -	**Calculated:** -	**Access level:** 2
Data type: Unsigned8	**Dyn. index:** -	**Func. diagram:** 8565
P-Group: Displays, signals	**Unit group:** -	**Unit selection:** -
Not for motor type: -	**Scaling:** -	**Expert list:** 1
Min	**Max**	**Factory setting**
-	-	-

Description: Displays the selected Motor Data Set (MDS) and the selected Encoder Data Sets (EDS).

Index: [0] = Motor Data Set MDS selected
[1] = Encoder 1 Encoder Data Set EDS selected
[2] = Encoder 2 Encoder Data Set EDS selected
[3] = Reserved

Dependency: Refer to: r0049, p0186, p0187, p0188

Note: Value 99 means the following: No encoder assigned (not configured).

p0839 Motor changeover contactor control delay time / Mot_chg ctrl t_del

SERVO_S110-DP, SERVO_S110-CAN, SERVO_S110-PN

Can be changed: C2(3)	**Calculated:** -	**Access level:** 2
Data type: Unsigned16	**Dyn. index:** -	**Func. diagram:** -
P-Group: Motor	**Unit group:** -	**Unit selection:** -
Not for motor type: -	**Scaling:** -	**Expert list:** 1
Min	**Max**	**Factory setting**
0 [ms]	500 [ms]	0 [ms]

Description: Sets the delay time for the contactor control for the motor changeover.

Note: The delay time is taken into account in the following cases:

- for feedback signal, previous contactor "Open". The new motor contactor is controlled (energized) after the delay time has expired.
- for the feedback signal, new motor contactor "Closed". The pulses are enabled after the delay time has expired.

p0840[0...n] BI: ON / OFF (OFF1) / ON / OFF (OFF1)

SERVO_S110-DP, SERVO_S110-CAN, SERVO_S110-PN

Can be changed: T	**Calculated:** -	**Access level:** 3
Data type: Unsigned32 / Binary	**Dyn. index:** CDS, p0170	**Func. diagram:** 2501, 2610, 8720, 8820, 8920
P-Group: Commands	**Unit group:** -	**Unit selection:** -
Not for motor type: -	**Scaling:** -	**Expert list:** 1
Min	**Max**	**Factory setting**
-	-	0

Description: Sets the signal source for the command "ON/OFF (OFF1)".

For the PROFIdrive profile, this command corresponds to control word 1 bit 0 (STW1.0).

Recommendation: When the setting for this binector input is changed, the motor can only be switched on by means of an appropriate signal change of the source.

Dependency: Refer to: p1055, p1056

Caution: When "master control from PC" is activated, this binector input is ineffective.

Notice: For binector input p0840 = 0 signal, the motor can be moved, jogging using binector input p1055 or p1056.

The command "ON/OFF (OFF1)" can be issued using binector input p0840 or p1055/p1056.

For binector input p0840 = 0 signal, the switch-on inhibit is acknowledged.

Only the signal source that originally powered up can also power down again.

The parameter may be protected as a result of p0922 or p2079 and cannot be changed.

Note: For drives with closed-loop speed control (p1300 = 20, 21), the following applies:

- BI: p0840 = 0 signal: OFF1 (braking with the ramp-function generator, then pulse suppression)

For drives with closed-loop torque control (p1300 = 22, 23), the following applies:

- BI: p0840 = 0 signal: immediate pulse suppression

For drives with closed-loop torque control (activated using p1501), the following applies:

- BI: p0840 = 0 signal: No dedicated braking response, but pulse cancelation when standstill is detected (p1226, p1227)

For drives with closed-loop speed/torque control, the following applies:

- BI: p0840 = 0/1 signal: ON (pulses can be enabled)

For active infeeds (Active Line Module and Smart Line Module) the following applies:

- BI: p0840 = 0 signal: OFF1 (reduce Vdc along the ramp, then pulse suppression and pre-charging contactor/line contactor open)
- BI: p0840 = 0/1 signal: ON (pre-charging contactor/line contactor close, pulses can be enabled)

For passive infeeds (Basic Line Module) the following applies:

- BI: p0840 = 0 signal: OFF1 (pre-charging contactor/line contactor open)
- BI: p0840 = 0/1 signal: ON (pre-charging contactor/line contactor close)

r0863.1 of a drive can also be selected as signal source.

p0844[0...n] BI: No coast-down / coast-down (OFF2) signal source 1 / OFF2 S_src 1

SERVO_S110-DP, SERVO_S110-CAN, SERVO_S110-PN

Can be changed: T	**Calculated:** -	**Access level:** 3
Data type: Unsigned32 / Binary	**Dyn. index:** CDS, p0170	**Func. diagram:** 2501, 8720, 8820, 8920
P-Group: Commands	**Unit group:** -	**Unit selection:** -
Not for motor type: -	**Scaling:** -	**Expert list:** 1
Min	**Max**	**Factory setting**
-	-	1

Description: Sets the first signal source for the command "No coast down/coast down (OFF2)".
The following signals are AND'ed:
- BI: p0844 "No coast-down / coast-down (OFF2) signal source 1"
- BI: p0845 "No coast-down / coast-down (OFF2) signal source 2"

For the PROFIdrive profile, the result of the AND logic operation corresponds to control word 1 bit 1 (STW1.1).
BI: p0844 = 0 signal or BI: p0845 = 0 signal
- OFF2 (immediate pulse suppression and switch on inhibit)

BI: p0844 = 1 signal and BI: p0845 = 1 signal
- No OFF2 (enable is possible)

Caution: When "master control from PC" is activated, this binector input is ineffective.

Notice: The parameter may be protected as a result of p0922 or p2079 and cannot be changed.

Note: For Active Line Modules, Smart Line Modules and binector input p0844 = 0 signal or p0845 = 0 signal, the following applies:
- pre-charging contactor/line contactor is additionally opened.

p0845[0...n] BI: No coast-down / coast-down (OFF2) signal source 2 / OFF2 S_src 2

SERVO_S110-DP, SERVO_S110-CAN, SERVO_S110-PN

Can be changed: T	**Calculated:** -	**Access level:** 3
Data type: Unsigned32 / Binary	**Dyn. index:** CDS, p0170	**Func. diagram:** 2501, 8720, 8820, 8920
P-Group: Commands	**Unit group:** -	**Unit selection:** -
Not for motor type: -	**Scaling:** -	**Expert list:** 1
Min	**Max**	**Factory setting**
-	-	1

Description: Sets the second signal source for the command "No coast down/coast down (OFF2)".
The following signals are AND'ed:
- BI: p0844 "No coast-down / coast-down (OFF2) signal source 1"
- BI: p0845 "No coast-down / coast-down (OFF2) signal source 2"

For the PROFIdrive profile, the result of the AND logic operation corresponds to control word 1 bit 1 (STW1.1).
BI: p0844 = 0 signal or BI: p0845 = 0 signal
- OFF2 (immediate pulse suppression and switch on inhibit)

BI: p0844 = 1 signal and BI: p0845 = 1 signal
- No OFF2 (enable is possible)

Caution: When "master control from PC" is activated, this binector input is effective.

Note: For Active Line Modules, Smart Line Modules and binector input p0844 = 0 signal or p0845 = 0 signal, the following applies:
- pre-charging contactor/line contactor is additionally opened.

p0848[0...n] BI: No Quick Stop / Quick Stop (OFF3) signal source 1 / OFF3 S_src 1

SERVO_S110-DP, SERVO_S110-CAN, SERVO_S110-PN

Can be changed: T	**Calculated:** -	**Access level:** 3
Data type: Unsigned32 / Binary	**Dyn. index:** CDS, p0170	**Func. diagram:** 2501
P-Group: Commands	**Unit group:** -	**Unit selection:** -
Not for motor type: -	**Scaling:** -	**Expert list:** 1
Min	**Max**	**Factory setting**
-	-	1

Description: Sets the first signal source for the command "No quick stop/quick stop (OFF3)".
The following signals are AND'ed:
- BI: p0848 "No quick stop / quick stop (OFF3) signal source 1"
- BI: p0849 "No quick stop / quick stop (OFF3) signal source 2"

For the PROFIdrive profile, the result of the AND logic operation corresponds to control word 1 bit 2 (STW1.2).
BI: p0848 = 0 signal or BI: p0849 = 0 signal
- OFF3 (braking along the OFF3 ramp (p1135), then pulse suppression and switch on inhibit)

BI: p0848 = 1 signal and BI: p0849 = 1 signal
- No OFF3 (enable is possible)

Caution: When "master control from PC" is activated, this binector input is ineffective.

Notice: The parameter may be protected as a result of p0922 or p2079 and cannot be changed.

p0849[0...n] BI: No Quick Stop / Quick Stop (OFF3) signal source 2 / OFF3 S_src 2

SERVO_S110-DP, SERVO_S110-CAN, SERVO_S110-PN

Can be changed: T	**Calculated:** -	**Access level:** 3
Data type: Unsigned32 / Binary	**Dyn. index:** CDS, p0170	**Func. diagram:** 2501
P-Group: Commands	**Unit group:** -	**Unit selection:** -
Not for motor type: -	**Scaling:** -	**Expert list:** 1
Min	**Max**	**Factory setting**
-	-	1

Description: Sets the second signal source for the command "No quick stop/quick stop (OFF3)".
The following signals are AND'ed:
- BI: p0848 "No quick stop / quick stop (OFF3) signal source 1"
- BI: p0849 "No quick stop / quick stop (OFF3) signal source 2"

For the PROFIdrive profile, the result of the AND logic operation corresponds to control word 1 bit 2 (STW1.2).
BI: p0848 = 0 signal or BI: p0849 = 0 signal
- OFF3 (braking along the OFF3 ramp (p1135), then pulse suppression and switch on inhibit)

BI: p0848 = 1 signal and BI: p0849 = 1 signal
- No OFF3 (enable is possible)

Caution: When "master control from PC" is activated, this binector input is effective.

p0852[0...n] BI: Enable operation/inhibit operation / Operation enable

SERVO_S110-DP, SERVO_S110-CAN, SERVO_S110-PN

Can be changed: T	**Calculated:** -	**Access level:** 3
Data type: Unsigned32 / Binary	**Dyn. index:** CDS, p0170	**Func. diagram:** 2501, 8820, 8920
P-Group: Commands	**Unit group:** -	**Unit selection:** -
Not for motor type: -	**Scaling:** -	**Expert list:** 1
Min	**Max**	**Factory setting**
-	-	1

Description: Sets the signal source for the command "enable operation/inhibit operation".

For the PROFIdrive profile, this command corresponds to control word 1 bit 3 (STW1.3).
BI: p0852 = 0 signal
Inhibit operation (suppress pulses).
BI: p0852 = 1 signal
Enable operation (pulses can be enabled).

Caution: When "master control from PC" is activated, this binector input is ineffective.

Notice: The parameter may be protected as a result of p0922 or p2079 and cannot be changed.

p0854[0...n] BI: Control by PLC/no control by PLC / Master ctrl by PLC

SERVO_S110-DP, SERVO_S110-CAN, SERVO_S110-PN

Can be changed: T	**Calculated:** -	**Access level:** 3
Data type: Unsigned32 / Binary	**Dyn. index:** CDS, p0170	**Func. diagram:** 2501, 8720, 8820, 8920
P-Group: Commands	**Unit group:** -	**Unit selection:** -
Not for motor type: -	**Scaling:** -	**Expert list:** 1
Min	**Max**	**Factory setting**
-	-	1

Description: Sets the signal source for the command "control by PLC/no control by PLC".
For the PROFIdrive profile, this command corresponds to control word 1 bit 10 (STW1.10).
BI: p0854 = 0 signal
No control by PLC
BI: p0852 = 1 signal
Master control by PLC.

Caution: When "master control from PC" is activated, this binector input is ineffective.

Notice: The parameter may be protected as a result of p0922 or p2079 and cannot be changed.

Note: This bit is used to initiate a response for the drives when the control fails (F07220). If there is no control available, then binector input p0854 should be set to 1.
If a control is available, then STW1.10 must be set to 1 (PZD1) so that the received data is updated. This applies regardless of the setting in p0854 and even in the case of free telegram configuration (p0922 = 999).

p0855[0...n] BI: Unconditionally release holding brake / Uncond open brake

SERVO_S110-DP, SERVO_S110-CAN, SERVO_S110-PN

Can be changed: T	**Calculated:** -	**Access level:** 3
Data type: Unsigned32 / Binary	**Dyn. index:** CDS, p0170	**Func. diagram:** 2501, 2701, 2707
P-Group: Commands	**Unit group:** -	**Unit selection:** -
Not for motor type: -	**Scaling:** -	**Expert list:** 1
Min	**Max**	**Factory setting**
-	-	0

Description: Sets the signal source for the command "unconditionally open holding brake".

Dependency: Refer to: p0858

Notice: The parameter may be protected as a result of p0922 or p2079 and cannot be changed.

Note: The signal via BI: p0858 (unconditionally close holding brake) has a higher priority than via BI: p0855 (unconditionally open holding brake).

p0856[0...n] BI: Enable speed controller / n_ctrl enable

SERVO_S110-DP, SERVO_S110-CAN, SERVO_S110-PN

Can be changed: T	**Calculated:** -	**Access level:** 3
Data type: Unsigned32 / Binary	**Dyn. index:** CDS, p0170	**Func. diagram:** 2501, 2701, 2707
P-Group: Commands	**Unit group:** -	**Unit selection:** -
Not for motor type: -	**Scaling:** -	**Expert list:** 1
Min	**Max**	**Factory setting**
-	-	1

Description: Sets the signal source for the command "enable speed controller" (r0898.12).

0 signal: Set the I component and speed controller output to zero.
1 signal: Enable speed controller.

Dependency: Refer to: r0898

Note: If "enable speed controller" is withdrawn, then an existing brake will be closed.
If "enable speed controller" is withdrawn, the pulses are not suppressed.

p0857 Power unit monitoring time / PU t_monit

SERVO_S110-DP, SERVO_S110-CAN, SERVO_S110-PN

Can be changed: T	**Calculated:** -	**Access level:** 2
Data type: FloatingPoint32	**Dyn. index:** -	**Func. diagram:** 8760, 8864, 8964
P-Group: Commands	**Unit group:** -	**Unit selection:** -
Not for motor type: -	**Scaling:** -	**Expert list:** 1
Min	**Max**	**Factory setting**
100.0 [ms]	60000.0 [ms]	6000.0 [ms]

Description: Sets the monitoring time for the power unit.
The monitoring time is started after an 0/1 edge of the ON/OFF1 command. If the power unit does not return a READY signal within the monitoring time, then fault F06000 (infeeds) or F07802 (drives) is output.

Dependency: Refer to: F07802, F30027

Notice: The maximum time to pre-charge the DC link is monitored in the power unit and cannot be changed. The maximum duration of the pre-charging depends on the power class and the power unit design.
The monitoring time for the pre-charging is started after the ON command (BI: p0840 = 0/1 signal). Fault F30027 is output when the maximum pre-charging duration is exceeded.

Note: The factory setting for p0857 depends on the power class and the design of the power unit.
The monitoring time for the ready signal of the power unit includes the time to pre-charge the DC link and, if relevant, the de-bounce time of the contactors.
If an excessively low value is entered into p0857, then after enable, this results in the corresponding fault.

p0858[0...n] BI: Unconditionally close holding brake / Uncond close brake

SERVO_S110-DP, SERVO_S110-CAN, SERVO_S110-PN

Can be changed: T	**Calculated:** -	**Access level:** 2
Data type: Unsigned32 / Binary	**Dyn. index:** CDS, p0170	**Func. diagram:** 2501, 2701, 2707
P-Group: Commands	**Unit group:** -	**Unit selection:** -
Not for motor type: -	**Scaling:** -	**Expert list:** 1
Min	**Max**	**Factory setting**
-	-	9719.13

Description: Sets the signal source for the command "unconditionally close holding brake".

Dependency: Refer to: p0855

Note: The signal via BI: p0858 (unconditionally close holding brake) has a higher priority than via BI: p0855 (unconditionally open holding brake).
For a 1 signal via BI: p0858, the command "unconditionally close the holding brake" is executed and internally a zero setpoint is entered.

p0860 BI: Line contactor feedback signal / Line contact feedb

SERVO_S110-DP, SERVO_S110-CAN, SERVO_S110-PN

Can be changed: T	**Calculated:** -	**Access level:** 3
Data type: Unsigned32 / Binary	**Dyn. index:** -	**Func. diagram:** 2634, 8734, 8834, 8934
P-Group: Commands	**Unit group:** -	**Unit selection:** -
Not for motor type: -	**Scaling:** -	**Expert list:** 1
Min	**Max**	**Factory setting**
-	-	863.1

Description: Sets the signal source for the feedback signal from the line contactor.

Recommendation: When the monitoring is activated (BI: p0860 not equal to r0863.1), then to control the line contactor, signal BO: r0863.1 of its own drive object should be used.

Dependency: Refer to: p0861, r0863
Refer to: F07300

Notice: The line contactor monitoring is de-activated if the control signal of the particular drive object is set as the signal source for the feedback signal of the line contactor (BI: p0860 = r0863.1).

Note: The state of the line contactor is monitored depending on signal BO: r0863.1.

When the monitoring is activated (BI: p0860 not equal to r0863.1), fault F07300 is then also output if the contactor is closed before it is controlled using r0863.1.

p0861 Line contactor monitoring time / LineContact t_mon

SERVO_S110-DP, SERVO_S110-CAN, SERVO_S110-PN

Can be changed: T	**Calculated:** -	**Access level:** 2
Data type: FloatingPoint32	**Dyn. index:** -	**Func. diagram:** 2634, 8734, 8834, 8934
P-Group: Commands	**Unit group:** -	**Unit selection:** -
Not for motor type: -	**Scaling:** -	**Expert list:** 1
Min	**Max**	**Factory setting**
0 [ms]	5000 [ms]	100 [ms]

Description: Sets the monitoring time of the line contactor.

This time starts each time that the line contactor switches (r0863.1). If a feedback signal is not received from the line contactor within the time, a message is output.

Dependency: Refer to: p0860, r0863

Refer to: F07300

Note: The monitoring function is disabled for the factory setting of p0860.

p0862 Power unit ON delay / PU t_on

SERVO_S110-DP, SERVO_S110-CAN, SERVO_S110-PN

Can be changed: T	**Calculated:** -	**Access level:** 3
Data type: FloatingPoint32	**Dyn. index:** -	**Func. diagram:** 2610
P-Group: Commands	**Unit group:** -	**Unit selection:** -
Not for motor type: -	**Scaling:** -	**Expert list:** 1
Min	**Max**	**Factory setting**
0 [ms]	65000 [ms]	0 [ms]

Description: Sets the delay time for the control command of the power unit and a line contactor, if used.

Note: This means that it is possible to realize a shifted (delayed) pre-charging or power-on using a single ON command.

When the infeed units are active, before the line contactor is closed, an offset adjustment of the current measurement is carried out for a duration of 120 ms (p3491).

r0863.0...2 CO/BO: Drive coupling status word/control word / CoupleZSW/STW

SERVO_S110-DP, SERVO_S110-CAN, SERVO_S110-PN

Can be changed: -	**Calculated:** -	**Access level:** 2
Data type: Unsigned16	**Dyn. index:** -	**Func. diagram:** -
P-Group: Commands	**Unit group:** -	**Unit selection:** -
Not for motor type: -	**Scaling:** -	**Expert list:** 1
Min	**Max**	**Factory setting**
-	-	-

Description: Displays the status and control words of the drive coupling.

Bit field:

Bit	Signal name	1 signal	0 signal	FP
00	Closed-loop control operation	Yes	No	2610
01	Energize contactor	Yes	No	2610, 2634
02	Infeed line supply failure	Yes	No	-

Note: Re bit 00:

Bit 0 signals that the infeed is ready.

When the operating signal is transferred via BO: r0863.0 this allows several drives to start (run-up) staggered over time when they are simultaneously powered up.

To realize this, the following connections/interconnections are required:

Drive 1: Interconnect BI: p0864 with BO: r0863.0 of the infeed

Drive 2: Interconnect BI: p0864 with BO: r0863.0 of drive 1

Drive 3: Interconnect BI: p0864 with BO: r0863.0 of drive 2, etc.

The first drive only transfers the operating signal to the next drive after it has reached its ready condition.

Re bit 01:
Bit 1 is used to control an external line contactor.
Re bit 02:
This bit only signals line supply failure for Active Infeed (A_INF) and Smart Infeed (S_INF).

p0868 Power unit DC switch debounce time / PU DC sw t_deboun

SERVO_S110-DP, SERVO_S110-CAN, SERVO_S110-PN

Can be changed: T	**Calculated:** -	**Access level:** 3
Data type: FloatingPoint32	**Dyn. index:** -	**Func. diagram:** -
P-Group: Commands	**Unit group:** -	**Unit selection:** -
Not for motor type: -	**Scaling:** -	**Expert list:** 1
Min	**Max**	**Factory setting**
0 [ms]	65000 [ms]	65000 [ms]

Description: Sets the debounce time for the DC circuit breaker for Motor Modules in "chassis" format.

Note: The following applies if p0868 = 65000 ms:
The debounce time defined internally in the power unit's EEPROM is implemented.

p0894 Parking pre-setting / Parking pre-set

SERVO_S110-DP, SERVO_S110-CAN, SERVO_S110-PN

Can be changed: U, T	**Calculated:** -	**Access level:** 4
Data type: Unsigned32	**Dyn. index:** -	**Func. diagram:** -
P-Group: Displays, signals	**Unit group:** -	**Unit selection:** -
Not for motor type: -	**Scaling:** -	**Expert list:** 1
Min	**Max**	**Factory setting**
-	-	0000 bin

Description: Pre-setting for the "Parking axis" and "Parking encoder" function.

Bit field:

Bit	Signal name	1 signal	0 signal	FP
00	Default with interconnection	Park	Do not park	-

Dependency: Refer to: p0480, p0897

Note: Re bit 00:
If there is at least one BICO interconnection for "Parking axis" or "Parking encoder", this default setting is taken into consideration during power-up.

r0896.0 BO: Parking axis, status word / Parking axis, ZSW

SERVO_S110-DP, SERVO_S110-CAN, SERVO_S110-PN

Can be changed: -	**Calculated:** -	**Access level:** 2
Data type: Unsigned8	**Dyn. index:** -	**Func. diagram:** -
P-Group: Displays, signals	**Unit group:** -	**Unit selection:** -
Not for motor type: -	**Scaling:** -	**Expert list:** 1
Min	**Max**	**Factory setting**
-	-	-

Description: Displays the status word for the "parking axis" function.

Bit field:

Bit	Signal name	1 signal	0 signal	FP
00	Parking axis active	Yes	No	-

Dependency: Refer to: p0897

p0897 BI: Parking axis selection / Parking axis sel

SERVO_S110-DP, SERVO_S110-CAN, SERVO_S110-PN

Can be changed: T	**Calculated:** -	**Access level:** 2
Data type: Unsigned32 / Binary	**Dyn. index:** -	**Func. diagram:** -
P-Group: Displays, signals	**Unit group:** -	**Unit selection:** -
Not for motor type: -	**Scaling:** -	**Expert list:** 1
Min	**Max**	**Factory setting**
-	-	0

Description: Sets the signal source to select the "parking axis" function.

Dependency: BI: p0897 = 0 signal
The function "parking axis" is not selected.
BI: p0897 = 1 signal
The function "parking axis" is selected.
Refer to: r0896

Notice: The parameter may be protected as a result of p0922 or p2079 and cannot be changed.

Note: After it has been selected the "parking axis" function only becomes active when the pulses are suppressed.

r0898.0...15 CO/BO: Control word drive object 1 / STW DO1

CU_S110-DP, CU_S110-CAN, CU_S110-PN

Can be changed: - **Calculated:** - **Access level:** 2
Data type: Unsigned16 **Dyn. index:** - **Func. diagram:** -
P-Group: Displays, signals **Unit group:** - **Unit selection:** -
Not for motor type: - **Scaling:** - **Expert list:** 1

Min	Max	Factory setting
-	-	-

Description: Displays the control word of drive object 1 (Control Unit).

Bit field:

Bit	Signal name	1 signal	0 signal	FP
00	Synchronization signal SYN	Yes	No	-
01	Real time synchronization PING	Yes	No	-
07	Acknowledge fault	Yes	No	-
12	Master sign-of-life bit 0	Yes	No	-
13	Master sign-of-life bit 1	Yes	No	-
14	Master sign-of-life bit 2	Yes	No	-
15	Master sign-of-life bit 3	Yes	No	-

r0898.0...14 CO/BO: Control word sequence control / STW seq_ctrl

SERVO_S110-DP, SERVO_S110-CAN, SERVO_S110-PN

Can be changed: - **Calculated:** - **Access level:** 2
Data type: Unsigned16 **Dyn. index:** - **Func. diagram:** 1530, 2501
P-Group: Displays, signals **Unit group:** - **Unit selection:** -
Not for motor type: - **Scaling:** - **Expert list:** 1

Min	Max	Factory setting
-	-	-

Description: Displays the control word of the sequence control.

Bit field:

Bit	Signal name	1 signal	0 signal	FP
00	ON/OFF1	Yes	No	-
01	OC / OFF2	Yes	No	-
02	OC / OFF3	Yes	No	-
03	Operation enable	Yes	No	-
04	Ramp-function generator enable	Yes	No	-
05	Continue ramp-function generator	Yes	No	-
06	Speed setpoint enable	Yes	No	-
07	Command open brake	Yes	No	-
08	Jog 1	Yes	No	-
09	Jog 2	Yes	No	-
10	Master control by PLC	Yes	No	-
12	Speed controller enable	Yes	No	-
14	Command close brake	Yes	No	-

Note: OC: Operating condition

r0899.0...15 CO/BO: Status word drive object 1 / ZSW DO1

CU_S110-DP, CU_S110-CAN, CU_S110-PN

Can be changed: - **Calculated:** - **Access level:** 2
Data type: Unsigned16 **Dyn. index:** - **Func. diagram:** -
P-Group: Displays, signals **Unit group:** - **Unit selection:** -
Not for motor type: - **Scaling:** - **Expert list:** 1

Min	Max	Factory setting
-	-	-

Description: Displays the status word from drive object 1 (Control Unit).

Bit field:

Bit	Signal name	1 signal	0 signal	FP
00	reserved	Yes	No	-
03	Fault present	Yes	No	-
07	Alarm present	Yes	No	-
08	System time synchronized	Yes	No	-
12	Slave sign-of-life bit 0	Yes	No	-
13	Slave sign-of-life bit 1	Yes	No	-
14	Slave sign-of-life bit 2	Yes	No	-
15	Slave sign-of-life bit 3	Yes	No	-

r0899.0...15 CO/BO: Status word sequence control / ZSW seq_ctrl

SERVO_S110-DP, SERVO_S110-CAN, SERVO_S110-PN

Can be changed: - **Calculated:** - **Access level:** 2
Data type: Unsigned16 **Dyn. index:** - **Func. diagram:** 1530, 2503
P-Group: Displays, signals **Unit group:** - **Unit selection:** -
Not for motor type: - **Scaling:** - **Expert list:** 1

Min	Max	Factory setting
-	-	-

Description: Displays the status word of the sequence control.

Bit field:

Bit	Signal name	1 signal	0 signal	FP
00	Ready for switching on	Yes	No	-
01	Ready	Yes	No	-
02	Operation enabled	Yes	No	-
03	Jog active	Yes	No	-
04	No coasting active	OFF2 inactive	OFF2 active	-
05	No Quick Stop active	OFF3 inactive	OFF3 active	-
06	Switching on inhibited active	Yes	No	-
07	Drive ready	Yes	No	-
08	Controller enable	Yes	No	-
09	Control request	Yes	No	-
11	Pulses enabled	Yes	No	-
12	Open holding brake	Yes	No	-
13	Command close holding brake	Yes	No	-
14	Pulse enable from the brake control	Yes	No	-
15	Setpoint enable from the brake control	Yes	No	-

Note:
Re bits 00, 01, 02, 04, 05, 06, 09:
For PROFIdrive, these signals are used for status word 1.
Re bit 13:
When the "Safe Brake Control" (SBC) is activated and selected, the brake is no longer controlled using this signal.
Re bit 14, 15:
These signals are only of significance when the "extended brake control" function module is activated (r0108.14 = 1).

p0918 PROFIBUS address / PB address

CU_S110-DP

Can be changed: T | **Calculated:** - | **Access level:** 2
Data type: Unsigned16 | **Dyn. index:** - | **Func. diagram:** 1520, 2410
P-Group: Communications | **Unit group:** - | **Unit selection:** -
Not for motor type: - | **Scaling:** - | **Expert list:** 1

Min	Max	Factory setting
1	126	126

Description: Displays or sets the PROFIBUS address for PROFIBUS interface on the Control Unit.
The address can be set as follows:
1) Using the DIP switch on the Control Unit.
--> p0918 can then only be read and displays the selected address.
--> A change only becomes effective after a POWER ON.
2) Using p0918
--> Only if all of the DIP switches are set to ON or OFF.
--> The address is saved in a non-volatile fashion using the function "copy from RAM to ROM".
--> A change only becomes effective after a POWER ON.

Note: Permissible PROFIBUS addresses: 1 ... 126
Address 126 is used for commissioning.
Every PROFIBUS address change only becomes effective after a POWER ON.

p0922 IF1 PROFIdrive telegram selection / IF1 PD Telegr_sel

CU_S110-DP, CU_S110-PN

Can be changed: C2(1), T | **Calculated:** - | **Access level:** 1
Data type: Unsigned16 | **Dyn. index:** - | **Func. diagram:** 1520, 2420, 2422, 2424
P-Group: Communications | **Unit group:** - | **Unit selection:** -
Not for motor type: - | **Scaling:** - | **Expert list:** 1

Min	Max	Factory setting
390	999	999

Description: Sets the send and receive telegram.

Value:
390: SIEMENS telegram 390, PZD-2/2
391: SIEMENS telegram 391, PZD-3/7
392: SIEMENS telegram 392, PZD-3/15
393: SIEMENS telegram 393, PZD-4/21
394: SIEMENS telegram 394, PZD-3/3
999: Free telegram configuration with BICO

p0922 IF1 PROFIdrive telegram selection / IF1 PD Telegr_sel

SERVO_S110-DP, SERVO_S110-PN

Can be changed: C2(1), T | **Calculated:** - | **Access level:** 1
Data type: Unsigned16 | **Dyn. index:** - | **Func. diagram:** 1520, 2420, 2422, 2423, 2424
P-Group: Communications | **Unit group:** - | **Unit selection:** -
Not for motor type: - | **Scaling:** - | **Expert list:** 1

Min	Max	Factory setting
1	999	999

Description: Sets the send and receive telegram.

Value:
1: Standard telegram 1, PZD-2/2
2: Standard telegram 2, PZD-4/4
3: Standard telegram 3, PZD-5/9
4: Standard telegram 4, PZD-6/14
102: SIEMENS telegram 102, PZD-6/10
103: SIEMENS telegram 103, PZD-7/15
999: Free telegram configuration with BICO

Dependency: Refer to: p2038
Refer to: F01505, F01506

Note: For p0922 = 100 ... 199, p2038 is automatically set to 1 and p2038 can no longer be changed. This means that for these telegrams, the "SIMODRIVE 611 universal" interface mode is set and cannot be changed.
If a value is not equal to 999, a telegram is set and the automatically set interconnections in the telegram are inhibited.
The inhibited interconnections can only be changed again after setting value 999.

p0922 IF1 PROFIdrive telegram selection / IF1 PD Telegr_sel

SERVO_S110-DP (Cl-loop pos ctrl, EPOS), SERVO_S110-PN (Cl-loop pos ctrl, EPOS)

Can be changed: C2(1), T	**Calculated:** -	**Access level:** 1
Data type: Unsigned16	**Dyn. index:** -	**Func. diagram:** 1520, 2420, 2422, 2423, 2424
P-Group: Communications	**Unit group:** -	**Unit selection:** -
Not for motor type: -	**Scaling:** -	**Expert list:** 1
Min	**Max**	**Factory setting**
7	999	999

Description: Sets the send and receive telegram.

Value:
7: Standard telegram 7, PZD-2/2
9: Standard telegram 9, PZD-10/5
110: SIEMENS telegram 110, PZD-12/7
111: SIEMENS telegram 111, PZD-12/12
999: Free telegram configuration with BICO

Dependency: Refer to: p2038
Refer to: F01505, F01506

Note: For p0922 = 100 ... 199, p2038 is automatically set to 1 and p2038 can no longer be changed. This means that for these telegrams, the "SIMODRIVE 611 universal" interface mode is set and cannot be changed.
If a value is not equal to 999, a telegram is set and the automatically set interconnections in the telegram are inhibited.
The inhibited interconnections can only be changed again after setting value 999.

p0922 IF1 PROFIdrive telegram selection / IF1 PD Telegr_sel

SERVO_S110-DP (Cl-loop pos ctrl), SERVO_S110-PN (Cl-loop pos ctrl)

Can be changed: C2(1), T	**Calculated:** -	**Access level:** 1
Data type: Unsigned16	**Dyn. index:** -	**Func. diagram:** 1520, 2420, 2422, 2423, 2424
P-Group: Communications	**Unit group:** -	**Unit selection:** -
Not for motor type: -	**Scaling:** -	**Expert list:** 1
Min	**Max**	**Factory setting**
999	999	999

Description: Sets the send and receive telegram.

Value:
999: Free telegram configuration with BICO

Dependency: Refer to: p2038
Refer to: F01505, F01506

Note: For p0922 = 100 ... 199, p2038 is automatically set to 1 and p2038 can no longer be changed. This means that for these telegrams, the "SIMODRIVE 611 universal" interface mode is set and cannot be changed.
If a value is not equal to 999, a telegram is set and the automatically set interconnections in the telegram are inhibited.
The inhibited interconnections can only be changed again after setting value 999.

r0924[0...1] ZSW bit pulses enabled / ZSW pulse enab

SERVO_S110-DP, SERVO_S110-CAN, SERVO_S110-PN

Can be changed: -	**Calculated:** -	**Access level:** 3
Data type: Unsigned16	**Dyn. index:** -	**Func. diagram:** 2454, 2456
P-Group: Communications	**Unit group:** -	**Unit selection:** -
Not for motor type: -	**Scaling:** -	**Expert list:** 1
Min	**Max**	**Factory setting**
-	-	-

Description: Displays the position of the "Pulses enabled" status signal in the PROFIdrive telegram.

Index:
[0] = Signal number
[1] = Bit position

p0925 PROFIdrive clock synchronous sign-of-life tolerance / PD SoL_tol

CU_S110-DP, CU_S110-PN, SERVO_S110-DP, SERVO_S110-PN

Can be changed: U, T	**Calculated:** -	**Access level:** 3
Data type: Unsigned16	**Dyn. index:** -	**Func. diagram:** 2410
P-Group: Communications	**Unit group:** -	**Unit selection:** -
Not for motor type: -	**Scaling:** -	**Expert list:** 1
Min	**Max**	**Factory setting**
0	65535	1

Description: Sets the number of tolerated consecutive sign-of-life errors of the clock-cycle synchronous master.
The sign-of-life signal is normally received in PZD4 (control word 2) from the master.

Dependency: Refer to: p2045, r2065
Refer to: F01912

Note: The sign-of-life monitoring is disabled for p0925 = 65535.

r0930 PROFIdrive operating mode / PD operating mode

SERVO_S110-DP, SERVO_S110-CAN, SERVO_S110-PN

Can be changed: -	**Calculated:** -	**Access level:** 3
Data type: Unsigned16	**Dyn. index:** -	**Func. diagram:** -
P-Group: Setpoints	**Unit group:** -	**Unit selection:** -
Not for motor type: -	**Scaling:** -	**Expert list:** 1
Min	**Max**	**Factory setting**
-	-	-

Description: Displays the operating mode.
1: Closed-loop speed controlled operation with ramp-function generator
2: Closed-loop position controlled operation
3: Closed-loop speed controlled operation without ramp-function generator

r0944 CO: Counter for fault buffer changes / Fault buff change

CU_S110-DP, CU_S110-CAN, CU_S110-PN, SERVO_S110-DP, SERVO_S110-CAN, SERVO_S110-PN

Can be changed: -	**Calculated:** -	**Access level:** 2
Data type: Unsigned16	**Dyn. index:** -	**Func. diagram:** 8060
P-Group: Messages	**Unit group:** -	**Unit selection:** -
Not for motor type: -	**Scaling:** -	**Expert list:** 1
Min	**Max**	**Factory setting**
-	-	-

Description: Displays fault buffer changes. This counter is incremented every time the fault buffer changes.

Recommendation: Used to check whether the fault buffer has been read out consistently.

Dependency: Refer to: r0945, r0947, r0948, r0949, r2109

r0945[0...63] Fault code / Fault code

CU_S110-DP, CU_S110-CAN, CU_S110-PN, SERVO_S110-DP, SERVO_S110-CAN, SERVO_S110-PN

Can be changed: -	**Calculated:** -	**Access level:** 2
Data type: Unsigned16	**Dyn. index:** -	**Func. diagram:** 1750, 8060
P-Group: Messages	**Unit group:** -	**Unit selection:** -
Not for motor type: -	**Scaling:** -	**Expert list:** 1
Min	**Max**	**Factory setting**
-	-	-

Description: Displays the numbers of faults that have occurred.

Dependency: Refer to: r0947, r0948, r0949, r2109, r2130, r2133, r2136, r3120, r3122

Note: The buffer parameters are cyclically updated in the background (refer to status signal in r2139).
Fault buffer structure (general principle):
r0945[0], r0949[0], r0948[0], r2109[0], r3115[0] --> actual fault case, fault 1
. . .
r0945[7], r0949[7], r0948[7], r2109[7], r3115[7] --> actual fault case, fault 8
r0945[8], r0949[8], r0948[8], r2109[8], r3115[8] --> 1st acknowledged fault case, fault 1
. . .

r0945[15], r0949[15], r0948[15], r2109[15], r3115[15] --> 1st acknowledged fault case, fault 8
. . .
r0945[56], r0949[56], r0948[56], r2109[56], r3115[56] --> 7th acknowledged fault case, fault 1
. . .
r0945[63], r0949[63], r0948[63], r2109[63], r3115[63] --> 7th acknowledged fault case, fault 8

r0946[0...65534] Fault code list / Fault code list

CU_S110-DP, CU_S110-CAN, CU_S110-PN, SERVO_S110-DP, SERVO_S110-CAN, SERVO_S110-PN

Can be changed: -	**Calculated:** -	**Access level:** 3
Data type: Unsigned16	**Dyn. index:** -	**Func. diagram:** 8060
P-Group: Messages	**Unit group:** -	**Unit selection:** -
Not for motor type: -	**Scaling:** -	**Expert list:** 0
Min	**Max**	**Factory setting**
-	-	-

Description: Lists the fault codes stored in the drive unit.
The indices can only be accessed with a valid fault code.
Dependency: The parameter assigned to the fault code is entered in r0951 under the same index.

r0947[0...63] Fault number / Fault number

CU_S110-DP, CU_S110-CAN, CU_S110-PN, SERVO_S110-DP, SERVO_S110-CAN, SERVO_S110-PN

Can be changed: -	**Calculated:** -	**Access level:** 3
Data type: Unsigned16	**Dyn. index:** -	**Func. diagram:** 1750, 8060
P-Group: Messages	**Unit group:** -	**Unit selection:** -
Not for motor type: -	**Scaling:** -	**Expert list:** 1
Min	**Max**	**Factory setting**
-	-	-

Description: This parameter is identical to r0945.

r0948[0...63] Fault time received in milliseconds / t_fault recv ms

CU_S110-DP, CU_S110-CAN, CU_S110-PN, SERVO_S110-DP, SERVO_S110-CAN, SERVO_S110-PN

Can be changed: -	**Calculated:** -	**Access level:** 3
Data type: Unsigned32	**Dyn. index:** -	**Func. diagram:** 1750, 8060
P-Group: Messages	**Unit group:** -	**Unit selection:** -
Not for motor type: -	**Scaling:** -	**Expert list:** 1
Min	**Max**	**Factory setting**
- [ms]	- [ms]	- [ms]

Description: Displays the system runtime in milliseconds when the fault occurred.
Dependency: Refer to: r0945, r0947, r0949, r2109, r2114, r2130, r2133, r2136, r3115, r3120, r3122
Notice: The time comprises r2130 (days) and r0948 (milliseconds).
Note: The buffer parameters are cyclically updated in the background (refer to status signal in r2139).
The structure of the fault buffer and the assignment of the indices is shown in r0945.
When the parameter is read via PROFIdrive, the TimeDifference data type applies.

r0949[0...63] Fault value / Fault value

CU_S110-DP, CU_S110-CAN, CU_S110-PN, SERVO_S110-DP, SERVO_S110-CAN, SERVO_S110-PN

Can be changed: -	**Calculated:** -	**Access level:** 3
Data type: Integer32	**Dyn. index:** -	**Func. diagram:** 1750, 8060
P-Group: Messages	**Unit group:** -	**Unit selection:** -
Not for motor type: -	**Scaling:** -	**Expert list:** 1
Min	**Max**	**Factory setting**
-	-	-

Description: Displays additional information about the fault that occurred (as integer number).
Dependency: Refer to: r0945, r0947, r0948, r2109, r2130, r2133, r2136, r3115, r3120, r3122
Note: The buffer parameters are cyclically updated in the background (refer to status signal in r2139).
The structure of the fault buffer and the assignment of the indices is shown in r0945.

p0952 Fault cases counter / Fault cases qty

CU_S110-DP, CU_S110-CAN, CU_S110-PN, SERVO_S110-DP, SERVO_S110-CAN, SERVO_S110-PN

Can be changed: U, T	**Calculated:** -	**Access level:** 3
Data type: Unsigned16	**Dyn. index:** -	**Func. diagram:** 1710, 8060
P-Group: Messages	**Unit group:** -	**Unit selection:** -
Not for motor type: -	**Scaling:** -	**Expert list:** 1
Min	**Max**	**Factory setting**
0	65535	0

Description: Number of fault situations that have occurred since the last reset.

Dependency: The fault buffer is deleted (cleared) by setting p0952 to 0.
Refer to: r0945, r0947, r0948, r0949, r2109, r2130, r2133, r2136

r0963 PROFIBUS baud rate / PB baud rate

CU_S110-DP

Can be changed: -	**Calculated:** -	**Access level:** 3
Data type: Unsigned16	**Dyn. index:** -	**Func. diagram:** -
P-Group: Communications	**Unit group:** -	**Unit selection:** -
Not for motor type: -	**Scaling:** -	**Expert list:** 1
Min	**Max**	**Factory setting**
0	255	-

Description: Displays the corresponding value for the PROFIBUS baud rate.

Value:
0: 9.6 kbit/s
1: 19.2 kbit/s
2: 93.75 kbit/s
3: 187.5 kbit/s
4: 500 kbit/s
6: 1.5 Mbit/s
7: 3 Mbit/s
8: 6 Mbit/s
9: 12 Mbit/s
10: 31.25 kbit/s
11: 45.45 kbit/s
255: Baud rate unknown

r0964[0...6] Device identification / Device ident

CU_S110-DP, CU_S110-CAN, CU_S110-PN

Can be changed: -	**Calculated:** -	**Access level:** 2
Data type: Unsigned16	**Dyn. index:** -	**Func. diagram:** -
P-Group: Communications	**Unit group:** -	**Unit selection:** -
Not for motor type: -	**Scaling:** -	**Expert list:** 1
Min	**Max**	**Factory setting**
-	-	-

Description: Displays the device identification.

Index:
[0] = Company (Siemens = 42)
[1] = Device type
[2] = Firmware version
[3] = Firmware date (year)
[4] = Firmware date (day/month)
[5] = Number of drive objects
[6] = Firmware patch/hot fix

Note: Example:
r0964[0] = 42 --> SIEMENS
r0964[1] = device type, see below
r0964[2] = 403 --> first part of the firmware version V04.03 (for second part, refer to index 6)
r0964[3] = 2010 --> year 2010
r0964[4] = 1705 --> 17th of May
r0964[5] = 2 --> 2 drive objects
r0964[6] = 200 --> second part, firmware version (complete version: V04.03.02.00)

Device type:
r0964[1] = 5400 --> SINAMICS S110 CU305 DP
r0964[1] = 5401 --> SINAMICS S110 CU305 PN
r0964[1] = 5402 --> SINAMICS S110 CU305 CAN

r0965 PROFIdrive profile number / PD profile number

CU_S110-DP, CU_S110-PN

Can be changed: -	**Calculated:** -	**Access level:** 3
Data type: Unsigned16	**Dyn. index:** -	**Func. diagram:** -
P-Group: Communications	**Unit group:** -	**Unit selection:** -
Not for motor type: -	**Scaling:** -	**Expert list:** 1
Min	**Max**	**Factory setting**
-	-	-

Description: Displays the PROFIdrive profile number and profile version.
Constant value = 0329 hex.
Byte 1: Profile number = 03 hex = PROFIdrive profile
Byte 2: Profile version = 29 hex = Version 4.1

Note: When the parameter is read via PROFIdrive, the Octet String 2 data type applies.

p0969 System runtime relative / t_System relative

CU_S110-DP, CU_S110-CAN, CU_S110-PN

Can be changed: T	**Calculated:** -	**Access level:** 3
Data type: Unsigned32	**Dyn. index:** -	**Func. diagram:** 1750, 8060
P-Group: Displays, signals	**Unit group:** -	**Unit selection:** -
Not for motor type: -	**Scaling:** -	**Expert list:** 1
Min	**Max**	**Factory setting**
0 [ms]	4294967295 [ms]	0 [ms]

Description: Displays the system runtime in ms since the last POWER ON.

Note: The value in p0969 can only be reset to 0.
The value overflows after approx. 49 days.
When the parameter is read via PROFIdrive, the TimeDifference data type applies.

p0970 Reset drive parameters / Drive par reset

SERVO_S110-DP, SERVO_S110-CAN, SERVO_S110-PN

Can be changed: C2(30)	**Calculated:** -	**Access level:** 2
Data type: Unsigned16	**Dyn. index:** -	**Func. diagram:** -
P-Group: Factory settings	**Unit group:** -	**Unit selection:** -
Not for motor type: -	**Scaling:** -	**Expert list:** 1
Min	**Max**	**Factory setting**
0	100	0

Description: The parameter is used to initiate the reset of the parameters of an individual drive unit.
Parameters of the basic drive commissioning (p0009) are not reset (p0107, p0108, p0111, p0112, p0115, p0121, p0130, p0131, p0140, p0141, p0142, p0170, p0186 ... p0188). These can only be reset using the factory setting of the complete drive unit (p0976).

Value:
0: Inactive
1: Start a parameter reset
5: Starts a safety parameter reset
100: Start a BICO interconnection reset

Dependency: Refer to: F01659

Notice: It is not possible to modify parameters after changing the value.

Note: A factory setting run can only be started if p0010 was first set to 30 (parameter reset).
At the end of the calculations, p0970 is automatically set to 0.
Parameter reset has been completed if p0970 and p0010 have been set to 0.

For p0970 = 5 the following applies:

The password for Safety Integrated must be set.

When Safety Integrated is enabled, this can result in error messages, which then require an acceptance test to be performed.

Then save the parameters and carry out a POWER ON.

For p0970 = 1 the following applies:

If a Safety Integrated function is parameterized (p9601), then the safety parameters are not reset. In this case, a fault F01659 is output with fault value 2.

p0971 Save drive object parameters / Drv_obj par save

CU_S110-DP, CU_S110-CAN, CU_S110-PN, SERVO_S110-DP, SERVO_S110-CAN, SERVO_S110-PN

Can be changed: U, T	**Calculated:** -	**Access level:** 1
Data type: Unsigned16	**Dyn. index:** -	**Func. diagram:** -
P-Group: Factory settings	**Unit group:** -	**Unit selection:** -
Not for motor type: -	**Scaling:** -	**Expert list:** 1
Min	**Max**	**Factory setting**
0	1	0

Description: Setting to save the parameter of the particular drive object in the non-volatile memory.

Value:
0: Inactive
1: Save drive object

Dependency: Refer to: p0977, p1960

Caution: If a memory card (optional) is inserted, the following applies:

The parameters are also saved on the card and therefore overwrite any existing data!

Caution: The Control Unit power supply may only be powered down after data has been saved (i.e. after data save has been started, wait until the parameter again has the value 0).

Notice: Writing to parameters is inhibited while saving.

Note: Starting from the particular drive object, the following parameters are saved:

CU3xx: Device-specific parameters and PROFIBUS device parameters.

Other objects: Parameters of the actual object and PROFIBUS device parameters.

Prerequisite:

In order that the parameter of a drive object, saved with p0971 = 1, is read the next time that the Control Unit is booted, then all parameters must, as a minimum, have first been saved once with p0977 = 1.

p0972 Drive unit reset / Drv_unit reset

CU_S110-DP, CU_S110-CAN, CU_S110-PN

Can be changed: U, T	**Calculated:** -	**Access level:** 1
Data type: Unsigned16	**Dyn. index:** -	**Func. diagram:** -
P-Group: -	**Unit group:** -	**Unit selection:** -
Not for motor type: -	**Scaling:** -	**Expert list:** 1
Min	**Max**	**Factory setting**
0	3	0

Description: Sets the required procedure to execute a hardware reset for the drive unit.

Value:
0: Inactive
1: Hardware-Reset immediate
2: Hardware reset preparation
3: Hardware reset after cyclic communication has failed

Danger: It must be absolutely ensured that the system is in a safe condition.

The memory card/device memory of the Control Unit must not be accessed.

Note: If value = 1:

Reset is immediately executed and communications interrupted.

After communications have been established, check the reset operation (refer below).

If value = 2:

Help to check the reset operation.

Firstly, set p0972 = 2 and then read back. Secondly, set p0972 = 1 (it is possible that this request is possibly no longer acknowledged). The communication is then interrupted.

After communications have been established, check the reset operation (refer below).

If value = 3:

The reset is executed after interrupting cyclic communication. This setting is used to implement a synchronized reset by a control for several drive units.

If the cyclic communication is active for both PROFIdrive interfaces, then the reset is executed after completing both cycle communications.

After communications have been established, check the reset operation (refer below).

To check the reset operation:

After the drive unit has been restarted and communications have been established, read p0972 and check the following:

p0972 = 0? --> The reset was successfully executed.

p0972 > 0? --> The reset was not executed.

r0975[0...10] Drive object identification / DO identification

CU_S110-DP, CU_S110-CAN, CU_S110-PN, SERVO_S110-DP, SERVO_S110-CAN, SERVO_S110-PN

Can be changed: -	**Calculated:** -	**Access level:** 2
Data type: Unsigned16	**Dyn. index:** -	**Func. diagram:** -
P-Group: Communications	**Unit group:** -	**Unit selection:** -
Not for motor type: -	**Scaling:** -	**Expert list:** 1
Min	**Max**	**Factory setting**
-	-	-

Description: Displays the identification of the drive object.

Index:
[0] = Company (Siemens = 42)
[1] = Drive object type
[2] = Firmware version
[3] = Firmware date (year)
[4] = Firmware date (day/month)
[5] = PROFIdrive drive object type class
[6] = PROFIdrive drive object sub-type Class 1
[7] = Drive object number
[8] = Reserved
[9] = Reserved
[10] = Firmware patch/hot fix

Note: Example:

r0975[0] = 42 --> SIEMENS

r0975[1] = 11 --> SERVO drive object type

r0975[2] = 102 --> first part, firmware version V01.02 (second part, refer to index 10)

r0975[3] = 2003 --> year 2003

r0975[4] = 1401 --> 14th of January

r0975[5] = 1 --> PROFIdrive drive object, type class

r0975[6] = 9 --> PROFIdrive drive object sub-type class 1

r0975[7] = 2 --> drive object number = 2

r0975[8] = 0 (reserved)

r0975[9] = 0 (reserved)

r0975[10] = 600 --> second part, firmware version (complete version: V01.02.06.00)

p0976 Reset and load all parameters / Reset load all par

CU_S110-DP, CU_S110-CAN, CU_S110-PN

Can be changed: C1(30)	**Calculated:** -	**Access level:** 1
Data type: Unsigned16	**Dyn. index:** -	**Func. diagram:** -
P-Group: Factory settings	**Unit group:** -	**Unit selection:** -
Not for motor type: -	**Scaling:** -	**Expert list:** 1
Min	**Max**	**Factory setting**
0	1013	0

Description: Resets or downloads all parameters of the drive system.

Value:
0: Inactive
1: Start reset of all parameters to factory setting
2: Start dnload of param. saved in non-volatile mem w/ p0977=1
3: Start download of volatile parameters from RAM
10: Start dnload of param. saved in non-volatile mem w/ p0977=10

11: Start dnload of param. saved in non-volatile mem w/ p0977=11
12: Start dnload of param. saved in non-volatile mem w/ p0977=12
20: Start download Siemens internal setting 20
21: Start download Siemens internal setting 21
22: Start download Siemens internal setting 22
23: Start download Siemens internal setting 23
24: Start download Siemens internal setting 24
25: Start download Siemens internal setting 25
26: Start download Siemens internal setting 26
100: Start resetting of all BICO interconnections
1011: Start dnload of param. saved in volatile mem w/ p0977=1011
1012: Start dnload of param. saved in volatile mem w/ p0977=1012
1013: Start dnload of param. saved in volatile mem w/ p0977=1013

Notice: It is not possible to modify parameters after changing the value.

Note: After all of the parameters have been reset to their factory setting, the system must be commissioned for the first time again.

Resetting or loading is realized in the non-volatile memory.

Procedure:

1. Set p0009 = 30 (parameter reset).
2. Set p0976 to "required value". The system is rebooted.

p0976 is automatically set to 0 and p0009 is automatically set to 1 after this has been carried out.

p0977 Save all parameters / Save all par

CU_S110-DP, CU_S110-CAN, CU_S110-PN

Can be changed: U, T	**Calculated:** -	**Access level:** 1
Data type: Unsigned16	**Dyn. index:** -	**Func. diagram:** -
P-Group: Factory settings	**Unit group:** -	**Unit selection:** -
Not for motor type: -	**Scaling:** -	**Expert list:** 1
Min	**Max**	**Factory setting**
0	1013	0

Description: Saves all parameters of the drive system to the non-volatile memory.

Value:
0: Inactive
1: Save in non-volatile memory - downloaded at POWER ON
10: Save as opt. in non-vol. memory - downloaded w/ p0976=10
11: Save as opt. in non-vol. memory - downloaded w/ p0976=11
12: Save as opt. in non-vol. memory - downloaded w/ p0976=12
20: Save in non-volatile memory as setting 20 (reserved)
21: Save in non-volatile memory as setting 21 (reserved)
22: Save in non-volatile memory as setting 22 (reserved)
23: Save in non-volatile memory as setting 23 (reserved)
24: Save in non-volatile memory as setting 24 (reserved)
25: Save in non-volatile memory as setting 25 (reserved)
26: Save in non-volatile memory as setting 26 (reserved)
80: Save in non-volatile memory time-optimized (reserved)
1011: Save in volatile memory, downloaded with p0976=1011
1012: Save in volatile memory, downloaded with p0976=1012
1013: Save in volatile memory, downloaded with p0976=1013

Dependency: Refer to: p0976, p1960

Caution: Memory card inserted:

The drive parameterization is also saved on the card. Any backed-up data is overwritten!!!

Caution: The Control Unit power supply may only be powered down after data has been saved (i.e. after data save has been started, wait until the parameter again has the value 0).

Notice: Writing to parameters is inhibited while saving.

Note: Parameters saved with p0977 = 10, 11 or 12 can be downloaded again with p0976 = 10, 11 or 12.

r0979[0...30] PROFIdrive encoder format / PD encoder format

SERVO_S110-DP, SERVO_S110-CAN, SERVO_S110-PN

Can be changed: -	**Calculated:** -	**Access level:** 3
Data type: Unsigned32	**Dyn. index:** -	**Func. diagram:** 4010, 4704
P-Group: Encoder	**Unit group:** -	**Unit selection:** -
Not for motor type: -	**Scaling:** -	**Expert list:** 1
Min	**Max**	**Factory setting**
-	-	-

Description: Displays the actual position encoder used according to PROFIdrive.

Index:
[0] = Header
[1] = Type encoder 1
[2] = Resolution enc 1
[3] = Shift factor G1_XIST1
[4] = Shift factor G1_XIST2
[5] = Distinguishable revolutions encoder 1
[6...10] = Reserved
[11] = Type encoder 2
[12] = Resolution enc 2
[13] = Shift factor G2_XIST1
[14] = Shift factor G2_XIST2
[15] = Distinguishable revolutions encoder 2
[16...30] = Reserved

Note: Information about the individual indices can be taken from the following literature:
PROFIdrive Profile Drive Technology

r0980[0...299] List of existing parameters 1 / List avail par 1

CU_S110-DP, CU_S110-CAN, CU_S110-PN, SERVO_S110-DP, SERVO_S110-CAN, SERVO_S110-PN

Can be changed: -	**Calculated:** -	**Access level:** 4
Data type: Unsigned16	**Dyn. index:** -	**Func. diagram:** -
P-Group: -	**Unit group:** -	**Unit selection:** -
Not for motor type: -	**Scaling:** -	**Expert list:** 0
Min	**Max**	**Factory setting**
-	-	-

Description: Displays the parameters that exist for this drive.

Dependency: Refer to: r0981, r0989

Note: The existing parameters are displayed in indices 0 to 298. If an index contains the value 0, then the list ends here. In a long list, index 299 contains the parameter number at which position the list continues.
This list consists solely of the following parameters:
r0980[0...299], r0981[0...299] ... r0989[0...299]
The parameters in this list are not displayed in the expert list of the commissioning software. However, they can be read from a higher-level control system (e.g. PROFIBUS master).

r0981[0...299] List of existing parameters 2 / List avail par 2

CU_S110-DP, CU_S110-CAN, CU_S110-PN, SERVO_S110-DP, SERVO_S110-CAN, SERVO_S110-PN

Can be changed: -	**Calculated:** -	**Access level:** 4
Data type: Unsigned16	**Dyn. index:** -	**Func. diagram:** -
P-Group: -	**Unit group:** -	**Unit selection:** -
Not for motor type: -	**Scaling:** -	**Expert list:** 0
Min	**Max**	**Factory setting**
-	-	-

Description: Displays the parameters that exist for this drive.

Dependency: Refer to: r0980, r0989

Note: The existing parameters are displayed in indices 0 to 298. If an index contains the value 0, then the list ends here. In a long list, index 299 contains the parameter number at which position the list continues.
This list consists solely of the following parameters:
r0980[0...299], r0981[0...299] ... r0989[0...299]
The parameters in this list are not displayed in the expert list of the commissioning software. However, they can be read from a higher-level control system (e.g. PROFIBUS master).

r0989[0...299] List of existing parameters 10 / List avail par 10

CU_S110-DP, CU_S110-CAN, CU_S110-PN, SERVO_S110-DP, SERVO_S110-CAN, SERVO_S110-PN

Can be changed: -	**Calculated:** -	**Access level:** 4
Data type: Unsigned16	**Dyn. index:** -	**Func. diagram:** -
P-Group: -	**Unit group:** -	**Unit selection:** -
Not for motor type: -	**Scaling:** -	**Expert list:** 0
Min	**Max**	**Factory setting**
-	-	-

Description: Displays the parameters that exist for this drive.

Dependency: Refer to: r0980, r0981

Note: The existing parameters are displayed in indices 0 to 298. If an index contains the value 0, then the list ends here.
This list consists solely of the following parameters:
r0980[0...299], r0981[0...299] ... r0989[0...299]
The parameters in this list are not displayed in the expert list of the commissioning software. However, they can be read from a higher-level control system (e.g. PROFIBUS master).

p1001[0...n] CO: Fixed speed setpoint 1 / n_set_fixed 1

SERVO_S110-DP (Ext setp), SERVO_S110-CAN (Ext setp), SERVO_S110-PN (Ext setp)

Can be changed: U, T	**Calculated:** -	**Access level:** 2
Data type: FloatingPoint32	**Dyn. index:** DDS, p0180	**Func. diagram:** 1021, 3010
P-Group: Setpoints	**Unit group:** 3_1	**Unit selection:** p0505
Not for motor type: -	**Scaling:** p2000	**Expert list:** 1
Min	**Max**	**Factory setting**
-210000.000 [rpm]	210000.000 [rpm]	0.000 [rpm]

Description: Sets a value for the fixed speed / velocity setpoint 1.

Dependency: Refer to: p1020, p1021, p1022, p1023, r1024, r1197

Notice: A BICO interconnection to a parameter that belongs to a drive data set always acts on the effective data set.

p1002[0...n] CO: Fixed speed setpoint 2 / n_set_fixed 2

SERVO_S110-DP (Ext setp), SERVO_S110-CAN (Ext setp), SERVO_S110-PN (Ext setp)

Can be changed: U, T	**Calculated:** -	**Access level:** 2
Data type: FloatingPoint32	**Dyn. index:** DDS, p0180	**Func. diagram:** 3010
P-Group: Setpoints	**Unit group:** 3_1	**Unit selection:** p0505
Not for motor type: -	**Scaling:** p2000	**Expert list:** 1
Min	**Max**	**Factory setting**
-210000.000 [rpm]	210000.000 [rpm]	0.000 [rpm]

Description: Sets a value for the fixed speed / velocity setpoint 2.

Dependency: Refer to: p1020, p1021, p1022, p1023, r1024, r1197

Notice: A BICO interconnection to a parameter that belongs to a drive data set always acts on the effective data set.

p1003[0...n] CO: Fixed speed setpoint 3 / n_set_fixed 3

SERVO_S110-DP (Ext setp), SERVO_S110-CAN (Ext setp), SERVO_S110-PN (Ext setp)

Can be changed: U, T	**Calculated:** -	**Access level:** 2
Data type: FloatingPoint32	**Dyn. index:** DDS, p0180	**Func. diagram:** 3010
P-Group: Setpoints	**Unit group:** 3_1	**Unit selection:** p0505
Not for motor type: -	**Scaling:** p2000	**Expert list:** 1
Min	**Max**	**Factory setting**
-210000.000 [rpm]	210000.000 [rpm]	0.000 [rpm]

Description: Sets a value for the fixed speed / velocity setpoint 3.

Dependency: Refer to: p1020, p1021, p1022, p1023, r1024, r1197

Notice: A BICO interconnection to a parameter that belongs to a drive data set always acts on the effective data set.

p1004[0...n] CO: Fixed speed setpoint 4 / n_set_fixed 4

SERVO_S110-DP (Ext setp), SERVO_S110-CAN (Ext setp), SERVO_S110-PN (Ext setp)

Can be changed: U, T	**Calculated:** -	**Access level:** 2
Data type: FloatingPoint32	**Dyn. index:** DDS, p0180	**Func. diagram:** 3010
P-Group: Setpoints	**Unit group:** 3_1	**Unit selection:** p0505
Not for motor type: -	**Scaling:** p2000	**Expert list:** 1
Min	**Max**	**Factory setting**
-210000.000 [rpm]	210000.000 [rpm]	0.000 [rpm]

Description: Sets a value for the fixed speed / velocity setpoint 4.
Dependency: Refer to: p1020, p1021, p1022, p1023, r1024, r1197
Notice: A BICO interconnection to a parameter that belongs to a drive data set always acts on the effective data set.

p1005[0...n] CO: Fixed speed setpoint 5 / n_set_fixed 5

SERVO_S110-DP (Ext setp), SERVO_S110-CAN (Ext setp), SERVO_S110-PN (Ext setp)

Can be changed: U, T	**Calculated:** -	**Access level:** 2
Data type: FloatingPoint32	**Dyn. index:** DDS, p0180	**Func. diagram:** 3010
P-Group: Setpoints	**Unit group:** 3_1	**Unit selection:** p0505
Not for motor type: -	**Scaling:** p2000	**Expert list:** 1
Min	**Max**	**Factory setting**
-210000.000 [rpm]	210000.000 [rpm]	0.000 [rpm]

Description: Sets a value for the fixed speed / velocity setpoint 5.
Dependency: Refer to: p1020, p1021, p1022, p1023, r1024, r1197
Notice: A BICO interconnection to a parameter that belongs to a drive data set always acts on the effective data set.

p1006[0...n] CO: Fixed speed setpoint 6 / n_set_fixed 6

SERVO_S110-DP (Ext setp), SERVO_S110-CAN (Ext setp), SERVO_S110-PN (Ext setp)

Can be changed: U, T	**Calculated:** -	**Access level:** 2
Data type: FloatingPoint32	**Dyn. index:** DDS, p0180	**Func. diagram:** 3010
P-Group: Setpoints	**Unit group:** 3_1	**Unit selection:** p0505
Not for motor type: -	**Scaling:** p2000	**Expert list:** 1
Min	**Max**	**Factory setting**
-210000.000 [rpm]	210000.000 [rpm]	0.000 [rpm]

Description: Sets a value for the fixed speed / velocity setpoint 6.
Dependency: Refer to: p1020, p1021, p1022, p1023, r1024, r1197
Notice: A BICO interconnection to a parameter that belongs to a drive data set always acts on the effective data set.

p1007[0...n] CO: Fixed speed setpoint 7 / n_set_fixed 7

SERVO_S110-DP (Ext setp), SERVO_S110-CAN (Ext setp), SERVO_S110-PN (Ext setp)

Can be changed: U, T	**Calculated:** -	**Access level:** 2
Data type: FloatingPoint32	**Dyn. index:** DDS, p0180	**Func. diagram:** 3010
P-Group: Setpoints	**Unit group:** 3_1	**Unit selection:** p0505
Not for motor type: -	**Scaling:** p2000	**Expert list:** 1
Min	**Max**	**Factory setting**
-210000.000 [rpm]	210000.000 [rpm]	0.000 [rpm]

Description: Sets a value for the fixed speed / velocity setpoint 7.
Dependency: Refer to: p1020, p1021, p1022, p1023, r1024, r1197
Notice: A BICO interconnection to a parameter that belongs to a drive data set always acts on the effective data set.

p1008[0...n] CO: Fixed speed setpoint 8 / n_set_fixed 8

SERVO_S110-DP (Ext setp), SERVO_S110-CAN (Ext setp), SERVO_S110-PN (Ext setp)

Can be changed: U, T	**Calculated:** -	**Access level:** 2
Data type: FloatingPoint32	**Dyn. index:** DDS, p0180	**Func. diagram:** 3010
P-Group: Setpoints	**Unit group:** 3_1	**Unit selection:** p0505
Not for motor type: -	**Scaling:** p2000	**Expert list:** 1
Min	**Max**	**Factory setting**
-210000.000 [rpm]	210000.000 [rpm]	0.000 [rpm]

Description: Sets a value for the fixed speed / velocity setpoint 8.
Dependency: Refer to: p1020, p1021, p1022, p1023, r1024, r1197
Notice: A BICO interconnection to a parameter that belongs to a drive data set always acts on the effective data set.

p1009[0...n] CO: Fixed speed setpoint 9 / n_set_fixed 9

SERVO_S110-DP (Ext setp), SERVO_S110-CAN (Ext setp), SERVO_S110-PN (Ext setp)

Can be changed: U, T	**Calculated:** -	**Access level:** 2
Data type: FloatingPoint32	**Dyn. index:** DDS, p0180	**Func. diagram:** 3010
P-Group: Setpoints	**Unit group:** 3_1	**Unit selection:** p0505
Not for motor type: -	**Scaling:** p2000	**Expert list:** 1
Min	**Max**	**Factory setting**
-210000.000 [rpm]	210000.000 [rpm]	0.000 [rpm]

Description: Sets a value for the fixed speed / velocity setpoint 9.
Dependency: Refer to: p1020, p1021, p1022, p1023, r1024, r1197
Notice: A BICO interconnection to a parameter that belongs to a drive data set always acts on the effective data set.

p1010[0...n] CO: Fixed speed setpoint 10 / n_set_fixed 10

SERVO_S110-DP (Ext setp), SERVO_S110-CAN (Ext setp), SERVO_S110-PN (Ext setp)

Can be changed: U, T	**Calculated:** -	**Access level:** 2
Data type: FloatingPoint32	**Dyn. index:** DDS, p0180	**Func. diagram:** 3010
P-Group: Setpoints	**Unit group:** 3_1	**Unit selection:** p0505
Not for motor type: -	**Scaling:** p2000	**Expert list:** 1
Min	**Max**	**Factory setting**
-210000.000 [rpm]	210000.000 [rpm]	0.000 [rpm]

Description: Sets a value for the fixed speed / velocity setpoint 10.
Dependency: Refer to: p1020, p1021, p1022, p1023, r1024, r1197
Notice: A BICO interconnection to a parameter that belongs to a drive data set always acts on the effective data set.

p1011[0...n] CO: Fixed speed setpoint 11 / n_set_fixed 11

SERVO_S110-DP (Ext setp), SERVO_S110-CAN (Ext setp), SERVO_S110-PN (Ext setp)

Can be changed: U, T	**Calculated:** -	**Access level:** 2
Data type: FloatingPoint32	**Dyn. index:** DDS, p0180	**Func. diagram:** 3010
P-Group: Setpoints	**Unit group:** 3_1	**Unit selection:** p0505
Not for motor type: -	**Scaling:** p2000	**Expert list:** 1
Min	**Max**	**Factory setting**
-210000.000 [rpm]	210000.000 [rpm]	0.000 [rpm]

Description: Sets a value for the fixed speed / velocity setpoint 11.
Dependency: Refer to: p1020, p1021, p1022, p1023, r1024, r1197
Notice: A BICO interconnection to a parameter that belongs to a drive data set always acts on the effective data set.

p1012[0...n] CO: Fixed speed setpoint 12 / n_set_fixed 12

SERVO_S110-DP (Ext setp), SERVO_S110-CAN (Ext setp), SERVO_S110-PN (Ext setp)

Can be changed: U, T	**Calculated:** -	**Access level:** 2
Data type: FloatingPoint32	**Dyn. index:** DDS, p0180	**Func. diagram:** 3010
P-Group: Setpoints	**Unit group:** 3_1	**Unit selection:** p0505
Not for motor type: -	**Scaling:** p2000	**Expert list:** 1
Min	**Max**	**Factory setting**
-210000.000 [rpm]	210000.000 [rpm]	0.000 [rpm]

Description: Sets a value for the fixed speed / velocity setpoint 12.
Dependency: Refer to: p1020, p1021, p1022, p1023, r1024, r1197
Notice: A BICO interconnection to a parameter that belongs to a drive data set always acts on the effective data set.

p1013[0...n] CO: Fixed speed setpoint 13 / n_set_fixed 13

SERVO_S110-DP (Ext setp), SERVO_S110-CAN (Ext setp), SERVO_S110-PN (Ext setp)

Can be changed: U, T	**Calculated:** -	**Access level:** 2
Data type: FloatingPoint32	**Dyn. index:** DDS, p0180	**Func. diagram:** 3010
P-Group: Setpoints	**Unit group:** 3_1	**Unit selection:** p0505
Not for motor type: -	**Scaling:** p2000	**Expert list:** 1
Min	**Max**	**Factory setting**
-210000.000 [rpm]	210000.000 [rpm]	0.000 [rpm]

Description: Sets a value for the fixed speed / velocity setpoint 13.
Dependency: Refer to: p1020, p1021, p1022, p1023, r1024, r1197
Notice: A BICO interconnection to a parameter that belongs to a drive data set always acts on the effective data set.

p1014[0...n] CO: Fixed speed setpoint 14 / n_set_fixed 14

SERVO_S110-DP (Ext setp), SERVO_S110-CAN (Ext setp), SERVO_S110-PN (Ext setp)

Can be changed: U, T	**Calculated:** -	**Access level:** 2
Data type: FloatingPoint32	**Dyn. index:** DDS, p0180	**Func. diagram:** 3010
P-Group: Setpoints	**Unit group:** 3_1	**Unit selection:** p0505
Not for motor type: -	**Scaling:** p2000	**Expert list:** 1
Min	**Max**	**Factory setting**
-210000.000 [rpm]	210000.000 [rpm]	0.000 [rpm]

Description: Sets a value for the fixed speed / velocity setpoint 14.
Dependency: Refer to: p1020, p1021, p1022, p1023, r1024, r1197
Notice: A BICO interconnection to a parameter that belongs to a drive data set always acts on the effective data set.

p1015[0...n] CO: Fixed speed setpoint 15 / n_set_fixed 15

SERVO_S110-DP (Ext setp), SERVO_S110-CAN (Ext setp), SERVO_S110-PN (Ext setp)

Can be changed: U, T	**Calculated:** -	**Access level:** 2
Data type: FloatingPoint32	**Dyn. index:** DDS, p0180	**Func. diagram:** 1021, 3010
P-Group: Setpoints	**Unit group:** 3_1	**Unit selection:** p0505
Not for motor type: -	**Scaling:** p2000	**Expert list:** 1
Min	**Max**	**Factory setting**
-210000.000 [rpm]	210000.000 [rpm]	0.000 [rpm]

Description: Sets a value for the fixed speed / velocity setpoint 15.
Dependency: Refer to: p1020, p1021, p1022, p1023, r1024, r1197
Notice: A BICO interconnection to a parameter that belongs to a drive data set always acts on the effective data set.

p1020[0...n] BI: Fixed speed setpoint selection Bit 0 / n_set_fixed Bit 0

SERVO_S110-DP (Ext setp), SERVO_S110-CAN (Ext setp), SERVO_S110-PN (Ext setp)

Can be changed: T	**Calculated:** -	**Access level:** 3
Data type: Unsigned32 / Binary	**Dyn. index:** CDS, p0170	**Func. diagram:** 2505
P-Group: Setpoints	**Unit group:** -	**Unit selection:** -
Not for motor type: -	**Scaling:** -	**Expert list:** 1
Min	**Max**	**Factory setting**
-	-	0

Description: Sets the signal source for selecting the fixed speed setpoint.

Dependency: Selects the required fixed speed setpoint using p1020 ... p1023.
Displays the number of the actual fixed speed setpoint in r1197.
Sets the values for the fixed speed setpoints 1 ... 15 using p1001 ... p1015.
Refer to: p1021, p1022, p1023, r1197

Note: If a fixed speed setpoint has not been selected (p1020 ... p1023 = 0, r1197 = 0), then r1024 = 0 (setpoint = 0).

p1021[0...n] BI: Fixed speed setpoint selection Bit 1 / n_set_fixed Bit 1

SERVO_S110-DP (Ext setp), SERVO_S110-CAN (Ext setp), SERVO_S110-PN (Ext setp)

Can be changed: T	**Calculated:** -	**Access level:** 3
Data type: Unsigned32 / Binary	**Dyn. index:** CDS, p0170	**Func. diagram:** 2505
P-Group: Setpoints	**Unit group:** -	**Unit selection:** -
Not for motor type: -	**Scaling:** -	**Expert list:** 1
Min	**Max**	**Factory setting**
-	-	0

Description: Sets the signal source for selecting the fixed speed setpoint.

Dependency: Selects the required fixed speed setpoint using p1020 ... p1023.
Displays the number of the actual fixed speed setpoint in r1197.
Sets the values for the fixed speed setpoints 1 ... 15 using p1001 ... p1015.
Refer to: p1020, p1022, p1023, r1197

Note: If a fixed speed setpoint has not been selected (p1020 ... p1023 = 0, r1197 = 0), then r1024 = 0 (setpoint = 0).

p1022[0...n] BI: Fixed speed setpoint selection Bit 2 / n_set_fixed Bit 2

SERVO_S110-DP (Ext setp), SERVO_S110-CAN (Ext setp), SERVO_S110-PN (Ext setp)

Can be changed: T	**Calculated:** -	**Access level:** 3
Data type: Unsigned32 / Binary	**Dyn. index:** CDS, p0170	**Func. diagram:** 2505
P-Group: Setpoints	**Unit group:** -	**Unit selection:** -
Not for motor type: -	**Scaling:** -	**Expert list:** 1
Min	**Max**	**Factory setting**
-	-	0

Description: Sets the signal source for selecting the fixed speed setpoint.

Dependency: Selects the required fixed speed setpoint using p1020 ... p1023.
Displays the number of the actual fixed speed setpoint in r1197.
Sets the values for the fixed speed setpoints 1 ... 15 using p1001 ... p1015.
Refer to: p1020, p1021, p1023, r1197

Note: If a fixed speed setpoint has not been selected (p1020 ... p1023 = 0, r1197 = 0), then r1024 = 0 (setpoint = 0).

p1023[0...n] BI: Fixed speed setpoint selection Bit 3 / n_set_fixed Bit 3

SERVO_S110-DP (Ext setp), SERVO_S110-CAN (Ext setp), SERVO_S110-PN (Ext setp)

Can be changed: T	**Calculated:** -	**Access level:** 3
Data type: Unsigned32 / Binary	**Dyn. index:** CDS, p0170	**Func. diagram:** 2505
P-Group: Setpoints	**Unit group:** -	**Unit selection:** -
Not for motor type: -	**Scaling:** -	**Expert list:** 1
Min	**Max**	**Factory setting**
-	-	0

Description: Sets the signal source for selecting the fixed speed setpoint.

Dependency: Selects the required fixed speed setpoint using p1020 ... p1023.
Displays the number of the actual fixed speed setpoint in r1197.
Sets the values for the fixed speed setpoints 1 ... 15 using p1001 ... p1015.
Refer to: p1020, p1021, p1022, r1197

Note: If a fixed speed setpoint has not been selected (p1020 ... p1023 = 0, r1197 = 0), then r1024 = 0 (setpoint = 0).

r1024 CO: Fixed speed setpoint effective / n_set_fixed eff

SERVO_S110-DP (Ext setp), SERVO_S110-CAN (Ext setp), SERVO_S110-PN (Ext setp)

Can be changed: -	**Calculated:** -	**Access level:** 3
Data type: FloatingPoint32	**Dyn. index:** -	**Func. diagram:** 1550, 3010
P-Group: Setpoints	**Unit group:** 3_1	**Unit selection:** p0505
Not for motor type: -	**Scaling:** p2000	**Expert list:** 1
Min	**Max**	**Factory setting**
- [rpm]	- [rpm]	- [rpm]

Description: Displays the selected and effective fixed speed setpoint.
This setpoint is the output value for the fixed speed setpoints and must be appropriately interconnected (e.g. with the main setpoint).

Recommendation: Interconnect the signal with main setpoint (p1070).

Dependency: Selects the required fixed speed setpoint using p1020 ... p1023.
Displays the number of the actual fixed speed setpoint in r1197.
Sets the values for the fixed speed setpoints 1 ... 15 using p1001 ... p1015.
Refer to: p1070, r1197

Note: If a fixed speed setpoint has not been selected (p1020 ... p1023 = 0, r1197 = 0), then r1024 = 0 (setpoint = 0).

p1030[0...n] Motorized potentiometer configuration / Mop configuration

SERVO_S110-DP (Ext setp), SERVO_S110-CAN (Ext setp), SERVO_S110-PN (Ext setp)

Can be changed: U, T	**Calculated:** -	**Access level:** 3
Data type: Unsigned16	**Dyn. index:** DDS, p0180	**Func. diagram:** 3020
P-Group: Setpoints	**Unit group:** -	**Unit selection:** -
Not for motor type: -	**Scaling:** -	**Expert list:** 1
Min	**Max**	**Factory setting**
-	-	0000 0110 bin

Description: Sets the configuration for the motorized potentiometer.

Bit field:

Bit	Signal name	1 signal	0 signal	FP
00	Data save active	Yes	No	-
01	Automatic mode ramp-function generator active	Yes	No	-
02	Initial rounding-off active	Yes	No	-
03	Save in NVRAM active	Yes	No	-
04	Ramp-function generator always active	Yes	No	-

Note: Re bit 00:
0: The setpoint for the motorized potentiometer is not saved and after ON is entered using p1040.
1: The setpoint for the motorized potentiometer is saved after OFF and after ON set to the saved value. In order to save in a non-volatile fashion, bit 03 should be set to 1.
Re bit 01:
0: Without ramp-function generator in the automatic mode (ramp-up/ramp-down time = 0).
1: With ramp-function generator in the automatic mode.
For manual operation (0 signal via BI: p1041), the ramp-function generator is always active.
Re bit 02:
0: Without initial rounding-off
1: With initial rounding-off. The selected ramp-up/down time is correspondingly exceeded. The initial rounding-off is a sensitive way of specifying small changes (progressive reaction when keys are pressed).
The jerk for the initial rounding-off is independent of the ramp-up time and only depends on the selected maximum speed (p1082). It is calculated as follows:
r = 0.01 % * p1082 [1/s] / 0.13^2 [s^2]
The jerk acts up until the maximum acceleration is reached (a_max = p1082 [1/s] / p1047 [s]), and then the drive continues to run linearly with a constant rate of acceleration. The higher the maximum acceleration (the lower that p1047 is), the longer the ramp-up time increases with respect to the set ramp-up time.

Re bit 03:

0: Non-volatile data save de-activated.

1: The setpoint for the motorized potentiometer is saved in a non-volatile fashion (for bit 00 = 1).

Re bit 04:

When the bit is set, the ramp-function generator is computed independent of the pulse enable. The actual output value of the motorized potentiometer is always in r1050.

p1035[0...n] BI: Motorized potentiometer setpoint raise / Mop raise

SERVO_S110-DP (Ext setp), SERVO_S110-CAN (Ext setp), SERVO_S110-PN (Ext setp)

Can be changed: T	**Calculated:** -	**Access level:** 3
Data type: Unsigned32 / Binary	**Dyn. index:** CDS, p0170	**Func. diagram:** 2505, 3020
P-Group: Setpoints	**Unit group:** -	**Unit selection:** -
Not for motor type: -	**Scaling:** -	**Expert list:** 1
Min	**Max**	**Factory setting**
-	-	0

Description: Sets the signal source to continually increase the setpoint for the motorized potentiometer.

The setpoint change (CO: r1050) depends on the set ramp-up time (p1047) and the duration of the signal that is present (BI: p1035).

Dependency: Refer to: p1036

Notice: The parameter may be protected as a result of p0922 or p2079 and cannot be changed.

p1036[0...n] BI: Motorized potentiometer lower setpoint / Mop lower

SERVO_S110-DP (Ext setp), SERVO_S110-CAN (Ext setp), SERVO_S110-PN (Ext setp)

Can be changed: T	**Calculated:** -	**Access level:** 3
Data type: Unsigned32 / Binary	**Dyn. index:** CDS, p0170	**Func. diagram:** 2505, 3020
P-Group: Setpoints	**Unit group:** -	**Unit selection:** -
Not for motor type: -	**Scaling:** -	**Expert list:** 1
Min	**Max**	**Factory setting**
-	-	0

Description: Sets the signal source to continuously lower the setpoint for the motorized potentiometer.

The setpoint change (CO: r1050) depends on the set ramp-down time (p1048) and the duration of the signal that is present (BI: p1036).

Dependency: Refer to: p1035

Notice: The parameter may be protected as a result of p0922 or p2079 and cannot be changed.

p1037[0...n] Motorized potentiometer maximum speed / MotP n_max

SERVO_S110-DP (Ext setp), SERVO_S110-CAN (Ext setp), SERVO_S110-PN (Ext setp)

Can be changed: U, T	**Calculated:** CALC_MOD_LIM_REF	**Access level:** 2
Data type: FloatingPoint32	**Dyn. index:** DDS, p0180	**Func. diagram:** 3020
P-Group: Setpoints	**Unit group:** 3_1	**Unit selection:** p0505
Not for motor type: -	**Scaling:** -	**Expert list:** 1
Min	**Max**	**Factory setting**
-210000.000 [rpm]	210000.000 [rpm]	0.000 [rpm]

Description: Sets the maximum speed/velocity for the motorized potentiometer.

Note: This parameter is automatically pre-assigned in the commissioning phase.

The setpoint output from the motorized potentiometer is limited to this value.

p1038[0...n] Motorized potentiometer minimum speed / MotP n_min

SERVO_S110-DP (Ext setp), SERVO_S110-CAN (Ext setp), SERVO_S110-PN (Ext setp)

Can be changed: U, T	**Calculated:** CALC_MOD_LIM_REF	**Access level:** 2
Data type: FloatingPoint32	**Dyn. index:** DDS, p0180	**Func. diagram:** 3020
P-Group: Setpoints	**Unit group:** 3_1	**Unit selection:** p0505
Not for motor type: -	**Scaling:** -	**Expert list:** 1
Min	**Max**	**Factory setting**
-210000.000 [rpm]	210000.000 [rpm]	0.000 [rpm]

Description: Sets the minimum speed/velocity for the motorized potentiometer.

Note: This parameter is automatically pre-assigned in the commissioning phase.
The setpoint output from the motorized potentiometer is limited to this value.

p1039[0...n] BI: Motorized potentiometer inversion / MotP inv

SERVO_S110-DP (Ext setp), SERVO_S110-CAN (Ext setp), SERVO_S110-PN (Ext setp)

Can be changed: T	**Calculated:** -	**Access level:** 3
Data type: Unsigned32 / Binary	**Dyn. index:** CDS, p0170	**Func. diagram:** 3020
P-Group: Setpoints	**Unit group:** -	**Unit selection:** -
Not for motor type: -	**Scaling:** -	**Expert list:** 1
Min	**Max**	**Factory setting**
-	-	0

Description: Sets the signal source to invert the minimum speed/velocity or the maximum speed/velocity for the motorized potentiometer.
Dependency: Refer to: p1037, p1038
Note: The inversion is only active during "motorized potentiometer raise" or "motorized potentiometer lower".

p1040[0...n] Motorized potentiometer starting value / Mop start value

SERVO_S110-DP (Ext setp), SERVO_S110-CAN (Ext setp), SERVO_S110-PN (Ext setp)

Can be changed: U, T	**Calculated:** -	**Access level:** 2
Data type: FloatingPoint32	**Dyn. index:** DDS, p0180	**Func. diagram:** 3020
P-Group: Setpoints	**Unit group:** 3_1	**Unit selection:** p0505
Not for motor type: -	**Scaling:** -	**Expert list:** 1
Min	**Max**	**Factory setting**
-210000.000 [rpm]	210000.000 [rpm]	0.000 [rpm]

Description: Sets the starting value for the motorized potentiometer. This starting value becomes effective after the drive has been powered up.
Dependency: Only effective if p1030.0 = 0.
Refer to: p1030

p1041[0...n] BI: Motorized potentiometer manual/automatic / Mop manual/auto

SERVO_S110-DP (Ext setp), SERVO_S110-CAN (Ext setp), SERVO_S110-PN (Ext setp)

Can be changed: T	**Calculated:** -	**Access level:** 3
Data type: Unsigned32 / Binary	**Dyn. index:** CDS, p0170	**Func. diagram:** 3020
P-Group: Setpoints	**Unit group:** -	**Unit selection:** -
Not for motor type: -	**Scaling:** -	**Expert list:** 1
Min	**Max**	**Factory setting**
-	-	0

Description: Sets the signal source to change over from manual to automatic when using a motorized potentiometer.
In the manual mode, the setpoint is changed using two signals - raise and lower. In the automatic mode, the setpoint must be interconnected via a connector input.
Dependency: Refer to: p1030, p1035, p1036, p1042
Note: The effectiveness of the internal ramp-function generator can be set in automatic mode.

p1042[0...n] CI: Motorized potentiometer automatic setpoint / Mop auto setpoint

SERVO_S110-DP (Ext setp), SERVO_S110-CAN (Ext setp), SERVO_S110-PN (Ext setp)

Can be changed: T	**Calculated:** -	**Access level:** 3
Data type: Unsigned32 / FloatingPoint32	**Dyn. index:** CDS, p0170	**Func. diagram:** 3020
P-Group: Setpoints	**Unit group:** -	**Unit selection:** -
Not for motor type: -	**Scaling:** p2000	**Expert list:** 1
Min	**Max**	**Factory setting**
-	-	0

Description: Sets the signal source for the setpoint of the motorized potentiometer in the automatic mode.
Dependency: Refer to: p1041

p1043[0...n] BI: Motorized potentiometer accept setting value / MotP acc set val

SERVO_S110-DP (Ext setp), SERVO_S110-CAN (Ext setp), SERVO_S110-PN (Ext setp)

Can be changed: T	**Calculated:** -	**Access level:** 3
Data type: Unsigned32 / Binary	**Dyn. index:** CDS, p0170	**Func. diagram:** 3020
P-Group: Setpoints	**Unit group:** -	**Unit selection:** -
Not for motor type: -	**Scaling:** -	**Expert list:** 1
Min	**Max**	**Factory setting**
-	-	0

Description: Sets the signal source to accept the setting value for the motorized potentiometer.
Dependency: Refer to: p1044
Note: The setting value (CI: p1044) becomes effective for a 0/1 edge of the setting command (BI: p1043).

p1044[0...n] CI: Motorized potentiometer setting value / Mop set val

SERVO_S110-DP (Ext setp), SERVO_S110-CAN (Ext setp), SERVO_S110-PN (Ext setp)

Can be changed: T	**Calculated:** -	**Access level:** 3
Data type: Unsigned32 / FloatingPoint32	**Dyn. index:** CDS, p0170	**Func. diagram:** 3020
P-Group: Setpoints	**Unit group:** -	**Unit selection:** -
Not for motor type: -	**Scaling:** p2000	**Expert list:** 1
Min	**Max**	**Factory setting**
-	-	0

Description: Sets the signal source for the setting value for the motorized potentiometer.
Dependency: Refer to: p1043
Note: The setting value (CI: p1044) becomes effective for a 0/1 edge of the setting command (BI: p1043).

r1045 CO: Mot. potentiometer speed setp. in front of ramp-fct. gen. / Mop n_set bef RFG

SERVO_S110-DP (Ext setp), SERVO_S110-CAN (Ext setp), SERVO_S110-PN (Ext setp)

Can be changed: -	**Calculated:** -	**Access level:** 3
Data type: FloatingPoint32	**Dyn. index:** -	**Func. diagram:** 3020
P-Group: Setpoints	**Unit group:** 3_1	**Unit selection:** p0505
Not for motor type: -	**Scaling:** p2000	**Expert list:** 1
Min	**Max**	**Factory setting**
- [rpm]	- [rpm]	- [rpm]

Description: Sets the effective setpoint in front of the internal motorized potentiometer ramp-function generator.

p1047[0...n] Motorized potentiometer ramp-up time / Mop ramp-up time

SERVO_S110-DP (Ext setp), SERVO_S110-CAN (Ext setp), SERVO_S110-PN (Ext setp)

Can be changed: U, T	**Calculated:** -	**Access level:** 2
Data type: FloatingPoint32	**Dyn. index:** DDS, p0180	**Func. diagram:** 3020
P-Group: Setpoints	**Unit group:** -	**Unit selection:** -
Not for motor type: -	**Scaling:** -	**Expert list:** 1
Min	**Max**	**Factory setting**
0.000 [s]	1000.000 [s]	10.000 [s]

Description: Sets the ramp-up time for the internal ramp-function generator for the motorized potentiometer.
The setpoint is changed from zero up to the speed/velocity limit (p1082) within this time (if no initial rounding-off has been activated).
Dependency: Refer to: p1030, p1048, p1082
Note: When the initial rounding-off is activated (p1030.2) the ramp-up time is correspondingly extended.

p1048[0...n] Motorized potentiometer ramp-down time / Mop ramp-down time

SERVO_S110-DP (Ext setp), SERVO_S110-CAN (Ext setp), SERVO_S110-PN (Ext setp)

Can be changed: U, T	**Calculated:** -	**Access level:** 2
Data type: FloatingPoint32	**Dyn. index:** DDS, p0180	**Func. diagram:** 3020
P-Group: Setpoints	**Unit group:** -	**Unit selection:** -
Not for motor type: -	**Scaling:** -	**Expert list:** 1
Min	**Max**	**Factory setting**
0.000 [s]	1000.000 [s]	10.000 [s]

Description: Sets the ramp-down time for the internal ramp-function generator for the motorized potentiometer.

The setpoint is changed from the speed/velocity limit (p1082) to zero within this time (if no initial rounding-off has been activated).

Dependency: Refer to: p1030, p1047, p1082

Note: The deceleration time is extended corresponding to the activated initial rounding-off (p1030.2).

r1050 CO: Motor. potentiometer setpoint after the ramp-function generator / Mop setp after RFG

SERVO_S110-DP (Ext setp), SERVO_S110-CAN (Ext setp), SERVO_S110-PN (Ext setp)

Can be changed: -	**Calculated:** -	**Access level:** 3
Data type: FloatingPoint32	**Dyn. index:** -	**Func. diagram:** 1550, 3020
P-Group: Setpoints	**Unit group:** 3_1	**Unit selection:** p0505
Not for motor type: -	**Scaling:** p2000	**Expert list:** 1
Min	**Max**	**Factory setting**
- [rpm]	- [rpm]	- [rpm]

Description: Sets the effective setpoint after the internal motorized potentiometer ramp-function generator.

This setpoint is the output value of the motorized potentiometer and must be appropriately interconnected onwards (e.g. with the main setpoint).

Recommendation: Interconnect the signal with main setpoint (p1070).

Dependency: Refer to: p1070

Note: For "With ramp-function generator", after an OFF1, OFF2, OFF3 or for a 0 signal via BI: p0852 (inhibit operation, suppress pulses) the ramp-function generator output (r1050) is set to the starting value (configuration via p1030.0).

p1051[0...n] CI: Speed limit RFG positive direction of rotation / n_limit RFG pos

SERVO_S110-DP (Ext setp), SERVO_S110-CAN (Ext setp), SERVO_S110-PN (Ext setp)

Can be changed: T	**Calculated:** -	**Access level:** 3
Data type: Unsigned32 / FloatingPoint32	**Dyn. index:** CDS, p0170	**Func. diagram:** 3050
P-Group: Setpoints	**Unit group:** -	**Unit selection:** -
Not for motor type: -	**Scaling:** p2000	**Expert list:** 1
Min	**Max**	**Factory setting**
-	-	1083[0]

Description: Sets the signal source for the speed limit of the positive direction on the ramp-function generator input.

p1052[0...n] CI: Speed limit RFG negative direction of rotation / n_limit RFG neg

SERVO_S110-DP (Ext setp), SERVO_S110-CAN (Ext setp), SERVO_S110-PN (Ext setp)

Can be changed: T	**Calculated:** -	**Access level:** 3
Data type: Unsigned32 / FloatingPoint32	**Dyn. index:** CDS, p0170	**Func. diagram:** 3050
P-Group: Setpoints	**Unit group:** -	**Unit selection:** -
Not for motor type: -	**Scaling:** p2000	**Expert list:** 1
Min	**Max**	**Factory setting**
-	-	1086[0]

Description: Sets the signal source for the speed limit of the negative direction on the ramp-function generator input.

p1055[0...n] BI: Jog bit 0 / Jog bit 0

SERVO_S110-DP (Ext setp), SERVO_S110-CAN (Ext setp), SERVO_S110-PN (Ext setp)

Can be changed: T	**Calculated:** -	**Access level:** 3
Data type: Unsigned32 / Binary	**Dyn. index:** CDS, p0170	**Func. diagram:** 2501, 3030
P-Group: Setpoints	**Unit group:** -	**Unit selection:** -
Not for motor type: -	**Scaling:** -	**Expert list:** 1
Min	**Max**	**Factory setting**
-	-	0

Description: Sets the signal source for jog 1.

Recommendation: When the setting for this binector input is changed, the motor can only be switched on by means of an appropriate signal change of the source.

Dependency: Refer to: p0840, p1058

Notice: The drive is enabled for jogging using BI: p1055 or BI: p1056.

The command "ON/OFF1" can be issued using BI: p0840 or using BI: p1055/p1056.

Only the signal source that was used to power up can also be used to power down again.

p1056[0...n] BI: Jog bit 1 / Jog bit 1

SERVO_S110-DP (Ext setp), SERVO_S110-CAN (Ext setp), SERVO_S110-PN (Ext setp)

Can be changed: T	**Calculated:** -	**Access level:** 3
Data type: Unsigned32 / Binary	**Dyn. index:** CDS, p0170	**Func. diagram:** 2501, 3030
P-Group: Setpoints	**Unit group:** -	**Unit selection:** -
Not for motor type: -	**Scaling:** -	**Expert list:** 1
Min	**Max**	**Factory setting**
-	-	0

Description: Sets the signal source for jog 2.

Recommendation: When the setting for this binector input is changed, the motor can only be switched on by means of an appropriate signal change of the source.

Dependency: Refer to: p0840, p1059

Notice: The drive is enabled for jogging using BI: p1055 or BI: p1056.
The command "ON/OFF1" can be issued using BI: p0840 or using BI: p1055/p1056.
Only the signal source that was used to power up can also be used to power down again.

p1058[0...n] Jog 1 speed setpoint / Jog 1 n_set

SERVO_S110-DP (Ext setp), SERVO_S110-CAN (Ext setp), SERVO_S110-PN (Ext setp)

Can be changed: T	**Calculated:** -	**Access level:** 2
Data type: FloatingPoint32	**Dyn. index:** DDS, p0180	**Func. diagram:** 1550, 3030
P-Group: Setpoints	**Unit group:** 3_1	**Unit selection:** p0505
Not for motor type: -	**Scaling:** -	**Expert list:** 1
Min	**Max**	**Factory setting**
-210000.000 [rpm]	210000.000 [rpm]	0.000 [rpm]

Description: Sets the speed/velocity for jog 1. Jogging is level-triggered and allows the motor to be incrementally moved.

Dependency: Refer to: p1055, p1056

p1059[0...n] Jog 2 speed setpoint / Jog 2 n_set

SERVO_S110-DP (Ext setp), SERVO_S110-CAN (Ext setp), SERVO_S110-PN (Ext setp)

Can be changed: T	**Calculated:** -	**Access level:** 2
Data type: FloatingPoint32	**Dyn. index:** DDS, p0180	**Func. diagram:** 1550, 3030
P-Group: Setpoints	**Unit group:** 3_1	**Unit selection:** p0505
Not for motor type: -	**Scaling:** -	**Expert list:** 1
Min	**Max**	**Factory setting**
-210000.000 [rpm]	210000.000 [rpm]	0.000 [rpm]

Description: Sets the speed/velocity for jog 2. Jogging is level-triggered and allows the motor to be incrementally moved.

Dependency: Refer to: p1055, p1056

p1063[0...n] Speed limit setpoint channel / n_limit setp

SERVO_S110-DP (Ext setp), SERVO_S110-CAN (Ext setp), SERVO_S110-PN (Ext setp)

Can be changed: U, T	**Calculated:** -	**Access level:** 1
Data type: FloatingPoint32	**Dyn. index:** DDS, p0180	**Func. diagram:** 3040
P-Group: Setpoints	**Unit group:** 3_1	**Unit selection:** p0505
Not for motor type: -	**Scaling:** -	**Expert list:** 1
Min	**Max**	**Factory setting**
0.000 [rpm]	210000.000 [rpm]	210000.000 [rpm]

Description: Sets the speed limit/velocity limit effective in the setpoint channel.

Dependency: Refer to: p1082, p1083, p1085, p1086, p1088

p1070[0...n] CI: Main setpoint / Main setpoint

SERVO_S110-DP (Ext setp), SERVO_S110-CAN (Ext setp), SERVO_S110-PN (Ext setp)

Can be changed: T	**Calculated:** -	**Access level:** 3
Data type: Unsigned32 / FloatingPoint32	**Dyn. index:** CDS, p0170	**Func. diagram:** 1550, 3030
P-Group: Setpoints	**Unit group:** -	**Unit selection:** -
Not for motor type: -	**Scaling:** p2000	**Expert list:** 1
Min	**Max**	**Factory setting**
-	-	1024[0]

Description: Sets the signal source for the main setpoint.
Examples:
r1024: Fixed speed setpoint effective
r1050: Motor. potentiometer setpoint after the ramp-function generator

Dependency: Refer to: p1071, r1073, r1078

Notice: The parameter may be protected as a result of p0922 or p2079 and cannot be changed.

p1071[0...n] CI: Main setpoint scaling / Main setp scal

SERVO_S110-DP (Ext setp), SERVO_S110-CAN (Ext setp), SERVO_S110-PN (Ext setp)

Can be changed: T	**Calculated:** -	**Access level:** 3
Data type: Unsigned32 / FloatingPoint32	**Dyn. index:** CDS, p0170	**Func. diagram:** 1550, 3030
P-Group: Setpoints	**Unit group:** -	**Unit selection:** -
Not for motor type: -	**Scaling:** PERCENT	**Expert list:** 1
Min	**Max**	**Factory setting**
-	-	1

Description: Sets the signal source for scaling the main setpoint.

r1073 CO: Main setpoint effective / Main setpoint eff

SERVO_S110-DP (Ext setp), SERVO_S110-CAN (Ext setp), SERVO_S110-PN (Ext setp)

Can be changed: -	**Calculated:** -	**Access level:** 3
Data type: FloatingPoint32	**Dyn. index:** -	**Func. diagram:** 3030
P-Group: Setpoints	**Unit group:** 3_1	**Unit selection:** p0505
Not for motor type: -	**Scaling:** p2000	**Expert list:** 1
Min	**Max**	**Factory setting**
- [rpm]	- [rpm]	- [rpm]

Description: Displays the effective main setpoint. The value shown is the main setpoint after scaling.

p1075[0...n] CI: Supplementary setpoint / Suppl setp

SERVO_S110-DP (Ext setp), SERVO_S110-CAN (Ext setp), SERVO_S110-PN (Ext setp)

Can be changed: T	**Calculated:** -	**Access level:** 3
Data type: Unsigned32 / FloatingPoint32	**Dyn. index:** CDS, p0170	**Func. diagram:** 1550, 3030
P-Group: Setpoints	**Unit group:** -	**Unit selection:** -
Not for motor type: -	**Scaling:** p2000	**Expert list:** 1
Min	**Max**	**Factory setting**
-	-	0

Description: Sets the signal source for the supplementary setpoint.

Dependency: Refer to: p1076, r1077, r1078

p1076[0...n] CI: Supplementary setpoint scaling / Suppl setp scal

SERVO_S110-DP (Ext setp), SERVO_S110-CAN (Ext setp), SERVO_S110-PN (Ext setp)

Can be changed: T	**Calculated:** -	**Access level:** 3
Data type: Unsigned32 / FloatingPoint32	**Dyn. index:** CDS, p0170	**Func. diagram:** 1550, 3030
P-Group: Setpoints	**Unit group:** -	**Unit selection:** -
Not for motor type: -	**Scaling:** PERCENT	**Expert list:** 1
Min	**Max**	**Factory setting**
-	-	1

Description: Sets the signal source for scaling the supplementary setpoint.

r1077 CO: Supplementary setpoint effective / Suppl setpoint eff

SERVO_S110-DP (Ext setp), SERVO_S110-CAN (Ext setp), SERVO_S110-PN (Ext setp)

Can be changed: -	**Calculated:** -	**Access level:** 3
Data type: FloatingPoint32	**Dyn. index:** -	**Func. diagram:** 3030
P-Group: Setpoints	**Unit group:** 3_1	**Unit selection:** p0505
Not for motor type: -	**Scaling:** p2000	**Expert list:** 1
Min	**Max**	**Factory setting**
- [rpm]	- [rpm]	- [rpm]

Description: Displays the effective supplementary setpoint. The value shown is the additional setpoint after scaling.

r1078 CO: Total setpoint effective / Total setpoint eff

SERVO_S110-DP (Ext setp), SERVO_S110-CAN (Ext setp), SERVO_S110-PN (Ext setp)

Can be changed: -	**Calculated:** -	**Access level:** 3
Data type: FloatingPoint32	**Dyn. index:** -	**Func. diagram:** 3030
P-Group: Setpoints	**Unit group:** 3_1	**Unit selection:** p0505
Not for motor type: -	**Scaling:** p2000	**Expert list:** 1
Min	**Max**	**Factory setting**
- [rpm]	- [rpm]	- [rpm]

Description: Displays the total effective setpoint. The value indicates the sum of the effective main setpoint and supplementary setpoint.

p1080[0...n] Minimum speed / n_min

SERVO_S110-DP (Ext setp), SERVO_S110-CAN (Ext setp), SERVO_S110-PN (Ext setp)

Can be changed: C2(1), T	**Calculated:** -	**Access level:** 1
Data type: FloatingPoint32	**Dyn. index:** DDS, p0180	**Func. diagram:** 3050
P-Group: Setpoints	**Unit group:** 3_1	**Unit selection:** p0505
Not for motor type: -	**Scaling:** -	**Expert list:** 1
Min	**Max**	**Factory setting**
0.000 [rpm]	19500.000 [rpm]	0.000 [rpm]

Description: Sets the lowest possible motor speed.
This value is not undershot in operation.

Note: The parameter value applies for both motor directions.
In exceptional cases, the motor can operate below this value (e.g. when reversing).

p1082[0...n] Maximum speed / n_max

SERVO_S110-DP, SERVO_S110-CAN, SERVO_S110-PN

Can be changed: C2(1), T	**Calculated:** CALC_MOD_ALL	**Access level:** 1
Data type: FloatingPoint32	**Dyn. index:** DDS, p0180	**Func. diagram:** 3020, 3050, 3060, 3070, 3095, 5300
P-Group: Setpoints	**Unit group:** 3_1	**Unit selection:** p0505
Not for motor type: -	**Scaling:** -	**Expert list:** 1
Min	**Max**	**Factory setting**
0.000 [rpm]	210000.000 [rpm]	1500.000 [rpm]

Description: Sets the highest possible speed.

Dependency: Refer to: p0115, p0322, p0324, p0532

Notice: It is not possible to modify parameters after changing the value.

Note: The parameter applies for both motor directions. The parameter has a limiting effect and is the reference quantity for all ramp-up and ramp-down times (e.g. down ramps, ramp-function generator, motor potentiometer).
Since the parameter is part of quick commissioning (p0010 = 1), it is defined appropriately when p0310, p0311, p0322, p0324, p0530, p0531, and p0532 are changed.
The following limits are always effective for p1082:
p1082 <= min(p0324, p0532) if p0324 > 0 and p0532 > 0
p1082 <= p0322 if p0324 = 0 or p0532 = 0 and p0322 > 0
p1082 <= 60 / (10.0 * p0115[0] * r0313)
p1082 <= 60 * Maximum power unit pulse frequency / (5.0 * r0313)

For the automatic calculation (p0340 = 1) the value of the parameter is pre-assigned the maximum motor speed (p0322). If p0322 = 0, the rated motor speed (p0311) is used as default (pre-assignment) value. For induction motors that are not catalog motors (p0301 = 0), the synchronous no-load speed is used as default (pre-assignment) value (p0310 * 60 / r0313).

For synchronous motors, the following additionally applies:

In the automatic calculation (p0340 = 1), p1082 is limited to speeds for which the rated current of the power unit (S1 continuous operation r0207[3]) is not sufficient as field current: p1082 < p0348 / (1 - r0207 / r0331), valid for r0207[3]<r0331.

On the other hand, an additional limit is effective, which prevents the EMF from exceeding the maximum DC link voltage (see p0643 and p1231).

The effective assignment of the motor data set parameter (e.g. p0311) to the drive data set parameter p1082 when pre-assigning should be taken from p0186.

p1082 is also available in the quick commissioning (p0010 = 1); this means that when exiting via p3900 > 0, the value is not changed.

p1083[0...n] CO: Speed limit in positive direction of rotation / n_limit pos

SERVO_S110-DP, SERVO_S110-CAN, SERVO_S110-PN

Can be changed: U, T	**Calculated:** -	**Access level:** 2
Data type: FloatingPoint32	**Dyn. index:** DDS, p0180	**Func. diagram:** 3050, 3095
P-Group: Setpoints	**Unit group:** 3_1	**Unit selection:** p0505
Not for motor type: -	**Scaling:** p2000	**Expert list:** 1
Min	**Max**	**Factory setting**
0.000 [rpm]	210000.000 [rpm]	210000.000 [rpm]

Description: Sets the maximum speed for the positive direction.

Notice: A BICO interconnection to a parameter that belongs to a drive data set always acts on the effective data set.

r1084 CO: Speed limit positive effective / n_limit pos eff

SERVO_S110-DP, SERVO_S110-CAN, SERVO_S110-PN

Can be changed: -	**Calculated:** -	**Access level:** 3
Data type: FloatingPoint32	**Dyn. index:** -	**Func. diagram:** 3050, 3095
P-Group: Setpoints	**Unit group:** 3_1	**Unit selection:** p0505
Not for motor type: -	**Scaling:** p2000	**Expert list:** 1
Min	**Max**	**Factory setting**
- [rpm]	- [rpm]	- [rpm]

Description: Displays the effective positive speed limit.

Dependency: Refer to: p1082, p1083, p1085

p1085[0...n] CI: Speed limit in positive direction of rotation / n_limit pos

SERVO_S110-DP (Ext setp), SERVO_S110-CAN (Ext setp), SERVO_S110-PN (Ext setp)

Can be changed: T	**Calculated:** -	**Access level:** 3
Data type: Unsigned32 / FloatingPoint32	**Dyn. index:** CDS, p0170	**Func. diagram:** 3050
P-Group: Setpoints	**Unit group:** -	**Unit selection:** -
Not for motor type: -	**Scaling:** p2000	**Expert list:** 1
Min	**Max**	**Factory setting**
-	-	1083[0]

Description: Sets the signal source for the speed limit of the positive direction.

p1086[0...n] CO: Speed limit in negative direction of rotation / n_limit neg

SERVO_S110-DP, SERVO_S110-CAN, SERVO_S110-PN

Can be changed: U, T	**Calculated:** -	**Access level:** 2
Data type: FloatingPoint32	**Dyn. index:** DDS, p0180	**Func. diagram:** 3050, 3095
P-Group: Setpoints	**Unit group:** 3_1	**Unit selection:** p0505
Not for motor type: -	**Scaling:** p2000	**Expert list:** 1
Min	**Max**	**Factory setting**
-210000.000 [rpm]	0.000 [rpm]	-210000.000 [rpm]

Description: Sets the speed limit for the negative direction.

Notice: A BICO interconnection to a parameter that belongs to a drive data set always acts on the effective data set.

r1087 CO: Speed limit negative effective / n_limit neg eff

SERVO_S110-DP, SERVO_S110-CAN, SERVO_S110-PN

Can be changed: -	**Calculated:** -	**Access level:** 3
Data type: FloatingPoint32	**Dyn. index:** -	**Func. diagram:** 3050, 3095
P-Group: Setpoints	**Unit group:** 3_1	**Unit selection:** p0505
Not for motor type: -	**Scaling:** p2000	**Expert list:** 1
Min	**Max**	**Factory setting**
- [rpm]	- [rpm]	- [rpm]

Description: Displays the effective negative speed limit.
Dependency: Refer to: p1082, p1086, p1088

p1088[0...n] CI: Speed limit in negative direction of rotation / n_limit neg

SERVO_S110-DP (Ext setp), SERVO_S110-CAN (Ext setp), SERVO_S110-PN (Ext setp)

Can be changed: T	**Calculated:** -	**Access level:** 3
Data type: Unsigned32 / FloatingPoint32	**Dyn. index:** CDS, p0170	**Func. diagram:** 3050
P-Group: Setpoints	**Unit group:** -	**Unit selection:** -
Not for motor type: -	**Scaling:** p2000	**Expert list:** 1
Min	**Max**	**Factory setting**
-	-	1086[0]

Description: Sets the signal source for the speed/velocity limit of the negative direction.

p1091[0...n] Skip speed 1 / n_skip 1

SERVO_S110-DP (Ext setp), SERVO_S110-CAN (Ext setp), SERVO_S110-PN (Ext setp)

Can be changed: U, T	**Calculated:** -	**Access level:** 3
Data type: FloatingPoint32	**Dyn. index:** DDS, p0180	**Func. diagram:** 3050
P-Group: Setpoints	**Unit group:** 3_1	**Unit selection:** p0505
Not for motor type: -	**Scaling:** p2000	**Expert list:** 1
Min	**Max**	**Factory setting**
0.000 [rpm]	210000.000 [rpm]	0.000 [rpm]

Description: Sets skip speed 1.
Dependency: Refer to: p1092, p1093, p1094, p1101
Notice: Skip bandwidths can also become ineffective as a result of the downstream limits in the setpoint channel.
Note: The skip (suppression) speeds can be used to prevent the effects of mechanical resonance.

p1092[0...n] Skip speed 2 / n_skip 2

SERVO_S110-DP (Ext setp), SERVO_S110-CAN (Ext setp), SERVO_S110-PN (Ext setp)

Can be changed: U, T	**Calculated:** -	**Access level:** 3
Data type: FloatingPoint32	**Dyn. index:** DDS, p0180	**Func. diagram:** 3050
P-Group: Setpoints	**Unit group:** 3_1	**Unit selection:** p0505
Not for motor type: -	**Scaling:** p2000	**Expert list:** 1
Min	**Max**	**Factory setting**
0.000 [rpm]	210000.000 [rpm]	0.000 [rpm]

Description: Sets skip speed 2.
Dependency: Refer to: p1091, p1093, p1094, p1101
Notice: Skip bandwidths can also become ineffective as a result of the downstream limits in the setpoint channel.

p1093[0...n] Skip speed 3 / n_skip 3

SERVO_S110-DP (Ext setp), SERVO_S110-CAN (Ext setp), SERVO_S110-PN (Ext setp)

Can be changed: U, T	**Calculated:** -	**Access level:** 3
Data type: FloatingPoint32	**Dyn. index:** DDS, p0180	**Func. diagram:** 3050
P-Group: Setpoints	**Unit group:** 3_1	**Unit selection:** p0505
Not for motor type: -	**Scaling:** p2000	**Expert list:** 1
Min	**Max**	**Factory setting**
0.000 [rpm]	210000.000 [rpm]	0.000 [rpm]

Description: Sets skip speed 3.
Dependency: Refer to: p1091, p1092, p1094, p1101

Notice: Skip bandwidths can also become ineffective as a result of the downstream limits in the setpoint channel.

p1094[0...n] Skip speed 4 / n_skip 4

SERVO_S110-DP (Ext setp), SERVO_S110-CAN (Ext setp), SERVO_S110-PN (Ext setp)

Can be changed: U, T	**Calculated:** -	**Access level:** 3
Data type: FloatingPoint32	**Dyn. index:** DDS, p0180	**Func. diagram:** 3050
P-Group: Setpoints	**Unit group:** 3_1	**Unit selection:** p0505
Not for motor type: -	**Scaling:** p2000	**Expert list:** 1
Min	**Max**	**Factory setting**
0.000 [rpm]	210000.000 [rpm]	0.000 [rpm]

Description: Sets skip speed 4.
Dependency: Refer to: p1091, p1092, p1093, p1101
Notice: Skip bandwidths can also become ineffective as a result of the downstream limits in the setpoint channel.

p1101[0...n] Skip speed bandwidth / n_skip bandwidth

SERVO_S110-DP (Ext setp), SERVO_S110-CAN (Ext setp), SERVO_S110-PN (Ext setp)

Can be changed: U, T	**Calculated:** -	**Access level:** 3
Data type: FloatingPoint32	**Dyn. index:** DDS, p0180	**Func. diagram:** 3050
P-Group: Setpoints	**Unit group:** 3_1	**Unit selection:** p0505
Not for motor type: -	**Scaling:** p2000	**Expert list:** 1
Min	**Max**	**Factory setting**
0.000 [rpm]	210000.000 [rpm]	0.000 [rpm]

Description: Sets the bandwidth for the skip speeds/velocities 1 to 4.
Dependency: Refer to: p1091, p1092, p1093, p1094
Note: The setpoint (reference) speeds are skipped (suppressed) in the range of the skip speed +/-p1101.
Steady-state operation is not possible in the skipped (suppressed) speed range. The skip (suppression) range is skipped.
Example:
p1091 = 600 and p1101 = 20
--> setpoint speeds between 580 and 620 [rpm] are skipped.
For the skip bandwidths, the following hysteresis behavior applies:
For a setpoint speed coming from below, the following applies:
r1170 < 580 [rpm] and 580 [rpm] <= r1114 <= 620 [rpm] --> r1119 = 580 [rpm]
For a setpoint speed coming from above, the following applies:
r1170 > 620 [rpm] and 580 [rpm] <= r1114 <= 620 [rpm] --> r1119 = 620 [rpm]

p1110[0...n] BI: Inhibit negative direction / Inhib neg dir

SERVO_S110-DP (Ext setp), SERVO_S110-CAN (Ext setp), SERVO_S110-PN (Ext setp)

Can be changed: T	**Calculated:** -	**Access level:** 3
Data type: Unsigned32 / Binary	**Dyn. index:** CDS, p0170	**Func. diagram:** 2505, 3040
P-Group: Setpoints	**Unit group:** -	**Unit selection:** -
Not for motor type: -	**Scaling:** -	**Expert list:** 1
Min	**Max**	**Factory setting**
-	-	0

Description: Sets the signal source to disable the negative direction.
Dependency: Refer to: p1111

p1111[0...n] BI: Inhibit positive direction / Inhib pos dir

SERVO_S110-DP (Ext setp), SERVO_S110-CAN (Ext setp), SERVO_S110-PN (Ext setp)

Can be changed: T	**Calculated:** -	**Access level:** 3
Data type: Unsigned32 / Binary	**Dyn. index:** CDS, p0170	**Func. diagram:** 2505, 3040
P-Group: Setpoints	**Unit group:** -	**Unit selection:** -
Not for motor type: -	**Scaling:** -	**Expert list:** 1
Min	**Max**	**Factory setting**
-	-	0

Description: Sets the signal source to disable the positive direction.
Dependency: Refer to: p1110

r1112 CO: Speed setpoint after minimum limiting / n_set aft min_lim

SERVO_S110-DP (Ext setp), SERVO_S110-CAN (Ext setp), SERVO_S110-PN (Ext setp)

Can be changed: -	**Calculated:** -	**Access level:** 3
Data type: FloatingPoint32	**Dyn. index:** -	**Func. diagram:** 3050
P-Group: Setpoints	**Unit group:** 3_1	**Unit selection:** p0505
Not for motor type: -	**Scaling:** p2000	**Expert list:** 1
Min	**Max**	**Factory setting**
- [rpm]	- [rpm]	- [rpm]

Description: Displays the speed setpoint after the minimum limiting.

Dependency: Refer to: p1091, p1092, p1093, p1094, p1101

p1113[0...n] BI: Setpoint inversion / Setp inv

SERVO_S110-DP (Ext setp), SERVO_S110-CAN (Ext setp), SERVO_S110-PN (Ext setp)

Can be changed: T	**Calculated:** -	**Access level:** 3
Data type: Unsigned32 / Binary	**Dyn. index:** CDS, p0170	**Func. diagram:** 2441, 2442, 2505, 3040
P-Group: Setpoints	**Unit group:** -	**Unit selection:** -
Not for motor type: -	**Scaling:** -	**Expert list:** 1
Min	**Max**	**Factory setting**
-	-	0

Description: Sets the signal source to invert the setpoint.

Dependency: Refer to: r1198

Notice: The parameter may be protected as a result of p0922 or p2079 and cannot be changed.

r1114 CO: Setpoint after the direction limiting / Setp after limit

SERVO_S110-DP (Ext setp), SERVO_S110-CAN (Ext setp), SERVO_S110-PN (Ext setp)

Can be changed: -	**Calculated:** -	**Access level:** 3
Data type: FloatingPoint32	**Dyn. index:** -	**Func. diagram:** 1550, 3040, 3050
P-Group: Setpoints	**Unit group:** 3_1	**Unit selection:** p0505
Not for motor type: -	**Scaling:** p2000	**Expert list:** 1
Min	**Max**	**Factory setting**
- [rpm]	- [rpm]	- [rpm]

Description: Displays the speed/velocity setpoint after the changeover and limiting the direction.

p1115 Ramp-function generator selection / RFG selection

SERVO_S110-DP (Ext setp), SERVO_S110-CAN (Ext setp), SERVO_S110-PN (Ext setp)

Can be changed: T	**Calculated:** -	**Access level:** 3
Data type: Integer16	**Dyn. index:** -	**Func. diagram:** 1550, 3080
P-Group: Setpoints	**Unit group:** -	**Unit selection:** -
Not for motor type: -	**Scaling:** -	**Expert list:** 1
Min	**Max**	**Factory setting**
0	1	0

Description: Sets the ramp-function generator type.

Value:
0: Basic ramp-function generator
1: Extended ramp-function generator

Note: Another ramp-function generator type can only be selected when the motor is at a standstill.

r1119 CO: Ramp-function generator setpoint at the input / RFG setp at inp

SERVO_S110-DP (Ext setp), SERVO_S110-CAN (Ext setp), SERVO_S110-PN (Ext setp)

Can be changed: -	**Calculated:** -	**Access level:** 3
Data type: FloatingPoint32	**Dyn. index:** -	**Func. diagram:** 1550, 1690, 3050, 3060, 3070
P-Group: Setpoints	**Unit group:** 3_1	**Unit selection:** p0505
Not for motor type: -	**Scaling:** p2000	**Expert list:** 1
Min	**Max**	**Factory setting**
- [rpm]	- [rpm]	- [rpm]

Description: Displays the setpoint at the input of the ramp-function generator.

Notice: The parameter may be protected as a result of p0922 or p2079 and cannot be changed.

Note: The setpoint is influenced by other functions, e.g. skip (suppressed) speeds, minimum and maximum limits.

p1120[0...n] Ramp-function generator ramp-up time / RFG ramp-up time

SERVO_S110-DP (Ext setp), SERVO_S110-CAN (Ext setp), SERVO_S110-PN (Ext setp)

Can be changed: C2(1), U, T	**Calculated:** -	**Access level:** 1
Data type: FloatingPoint32	**Dyn. index:** DDS, p0180	**Func. diagram:** 3060, 3070
P-Group: Setpoints	**Unit group:** -	**Unit selection:** -
Not for motor type: -	**Scaling:** -	**Expert list:** 1
Min	**Max**	**Factory setting**
0.000 [s]	999999.000 [s]	10.000 [s]

Description: The ramp-function generator ramps-up the speed setpoint from standstill (setpoint = 0) up to the maximum speed (p1082) in this time.

Dependency: Refer to: p1082

p1121[0...n] Ramp-function generator ramp-down time / RFG ramp-down time

SERVO_S110-DP, SERVO_S110-CAN, SERVO_S110-PN

Can be changed: C2(1), U, T	**Calculated:** -	**Access level:** 1
Data type: FloatingPoint32	**Dyn. index:** DDS, p0180	**Func. diagram:** 3060, 3070
P-Group: Setpoints	**Unit group:** -	**Unit selection:** -
Not for motor type: -	**Scaling:** -	**Expert list:** 1
Min	**Max**	**Factory setting**
0.000 [s]	999999.000 [s]	10.000 [s]

Description: The ramp-function generator ramps-down the speed setpoint from the maximum speed (p1082) down to standstill (setpoint = 0) in this time.

Further, the ramp-down time is always effective for OFF1.

Dependency: Refer to: p1082

Note: The following applies for SERVO:

The ramp-function generator is only available when the function module "extended setpoint channel" is active (r0108.8 = 1).

p1122[0...n] BI: Bypass ramp-function generator / Bypass RFG

SERVO_S110-DP (Ext setp), SERVO_S110-CAN (Ext setp), SERVO_S110-PN (Ext setp)

Can be changed: U, T	**Calculated:** -	**Access level:** 3
Data type: Unsigned32 / Binary	**Dyn. index:** CDS, p0170	**Func. diagram:** 2505
P-Group: Setpoints	**Unit group:** -	**Unit selection:** -
Not for motor type: -	**Scaling:** -	**Expert list:** 1
Min	**Max**	**Factory setting**
-	-	0

Description: Sets the signal source for bypassing the ramp generator (ramp-up and ramp-down times = 0).

Notice: The parameter may be protected as a result of p0922 or p2079 and cannot be changed.

p1130[0...n] Ramp-function generator initial rounding-off time / RFG t_start_round

SERVO_S110-DP (Ext setp), SERVO_S110-CAN (Ext setp), SERVO_S110-PN (Ext setp)

Can be changed: U, T	**Calculated:** -	**Access level:** 2
Data type: FloatingPoint32	**Dyn. index:** DDS, p0180	**Func. diagram:** 3070
P-Group: Setpoints	**Unit group:** -	**Unit selection:** -
Not for motor type: -	**Scaling:** -	**Expert list:** 1
Min	**Max**	**Factory setting**
0.000 [s]	30.000 [s]	0.000 [s]

Description: Sets the initial rounding-off time for the extended ramp generator. The value applies to ramp-up and ramp-down.

Note: Rounding-off times avoid an abrupt response and prevent damage to the mechanical system.

p1131[0...n] Ramp-function generator final rounding-off time / RFG t_end_delay

SERVO_S110-DP (Ext setp), SERVO_S110-CAN (Ext setp), SERVO_S110-PN (Ext setp)

Can be changed: U, T	**Calculated:** -	**Access level:** 2
Data type: FloatingPoint32	**Dyn. index:** DDS, p0180	**Func. diagram:** 3070
P-Group: Setpoints	**Unit group:** -	**Unit selection:** -
Not for motor type: -	**Scaling:** -	**Expert list:** 1
Min	**Max**	**Factory setting**
0.000 [s]	30.000 [s]	0.000 [s]

Description: Sets the final rounding-off time for the extended ramp generator. The value applies to ramp-up and ramp-down.

Note: Rounding-off times avoid an abrupt response and prevent damage to the mechanical system.

p1134[0...n] Ramp-function generator rounding-off type / RFG round-off type

SERVO_S110-DP (Ext setp), SERVO_S110-CAN (Ext setp), SERVO_S110-PN (Ext setp)

Can be changed: U, T	**Calculated:** -	**Access level:** 2
Data type: Integer16	**Dyn. index:** DDS, p0180	**Func. diagram:** 3070
P-Group: Setpoints	**Unit group:** -	**Unit selection:** -
Not for motor type: -	**Scaling:** -	**Expert list:** 1
Min	**Max**	**Factory setting**
0	1	0

Description: Sets the smoothed response to the OFF1 command or the reduced setpoint for the extended ramp-function generator.

Value:
0: Cont smoothing
1: Discont smoothing

Dependency: No effect up to initial rounding-off time (p1130) > 0 s.

Note: p1134 = 0 (continuous smoothing)

If the setpoint is reduced while ramping-up, initially a final rounding-off is carried out and then the ramp-up completed. During the final rounding-off, the output of the ramp-function generator continues to go in the direction of the previous setpoint (overshoot). After the final rounding-off has been completed, the output goes toward the new setpoint.

p1134 = 1 (discontinuous smoothing)

If the setpoint is reduced while ramping-up, then the output goes immediately in the direction of the new setpoint. For the setpoint change there is no rounding-off.

p1135[0...n] OFF3 ramp-down time / OFF3 t_RD

SERVO_S110-DP, SERVO_S110-CAN, SERVO_S110-PN

Can be changed: C2(1), U, T	**Calculated:** -	**Access level:** 2
Data type: FloatingPoint32	**Dyn. index:** DDS, p0180	**Func. diagram:** 3060, 3070
P-Group: Setpoints	**Unit group:** -	**Unit selection:** -
Not for motor type: -	**Scaling:** -	**Expert list:** 1
Min	**Max**	**Factory setting**
0.000 [s]	600.000 [s]	0.000 [s]

Description: Sets the ramp-down time from the maximum speed down to zero speed for the OFF3 command.

Note: This time can be exceeded if the DC link voltage reaches its maximum value.

p1136[0...n] OFF3 initial rounding-off time / RFGOFF3 t_strt_rnd

SERVO_S110-DP (Ext setp), SERVO_S110-CAN (Ext setp), SERVO_S110-PN (Ext setp)

Can be changed: U, T	**Calculated:** -	**Access level:** 2
Data type: FloatingPoint32	**Dyn. index:** DDS, p0180	**Func. diagram:** 3070
P-Group: Setpoints	**Unit group:** -	**Unit selection:** -
Not for motor type: -	**Scaling:** -	**Expert list:** 1
Min	**Max**	**Factory setting**
0.000 [s]	30.000 [s]	0.000 [s]

Description: Sets the initial rounding-off time for OFF3 for the extended ramp generator.

p1137[0...n] OFF3 final rounding-off time / RFG OFF3 t_end_del

SERVO_S110-DP (Ext setp), SERVO_S110-CAN (Ext setp), SERVO_S110-PN (Ext setp)

Can be changed: U, T	**Calculated:** -	**Access level:** 2
Data type: FloatingPoint32	**Dyn. index:** DDS, p0180	**Func. diagram:** 3070
P-Group: Setpoints	**Unit group:** -	**Unit selection:** -
Not for motor type: -	**Scaling:** -	**Expert list:** 1
Min	**Max**	**Factory setting**
0.000 [s]	30.000 [s]	0.000 [s]

Description: Sets the final rounding-off time for OFF3 for the extended ramp generator.

p1140[0...n] BI: Enable ramp-function generator/inhibit ramp-function generator / RFG enable

SERVO_S110-DP, SERVO_S110-CAN, SERVO_S110-PN

Can be changed: T	**Calculated:** -	**Access level:** 3
Data type: Unsigned32 / Binary	**Dyn. index:** CDS, p0170	**Func. diagram:** 2501
P-Group: Setpoints	**Unit group:** -	**Unit selection:** -
Not for motor type: -	**Scaling:** -	**Expert list:** 1
Min	**Max**	**Factory setting**
-	-	1

Description: Sets the signal source for the command "enable ramp-function generator/inhibit ramp-function generator".
For the PROFIdrive profile, this command corresponds to control word 1 bit 4 (STW1.4).
BI: p1140 = 0 signal:
Inhibits the ramp-function generator (the ramp-function generator output is set to zero).
BI: p1140 = 1 signal:
Ramp-function generator enable.

Dependency: Refer to: p1141, p1142

Caution: When "master control from PC" is activated, this binector input is ineffective.

Notice: The parameter may be protected as a result of p0922 or p2079 and cannot be changed.

p1141[0...n] BI: Continue ramp-function generator/freeze ramp-function generator / Continue RFG

SERVO_S110-DP, SERVO_S110-CAN, SERVO_S110-PN

Can be changed: T	**Calculated:** -	**Access level:** 3
Data type: Unsigned32 / Binary	**Dyn. index:** CDS, p0170	**Func. diagram:** 2501
P-Group: Setpoints	**Unit group:** -	**Unit selection:** -
Not for motor type: -	**Scaling:** -	**Expert list:** 1
Min	**Max**	**Factory setting**
-	-	1

Description: Sets the signal source for the command "continue ramp-function generator/freeze ramp-function generator".
For the PROFIdrive profile, this command corresponds to control word 1 bit 5 (STW1.5).
BI: p1141 = 0 signal:
Freezes the ramp-function generator.
BI: p1141 = 1 signal:
Continue ramp-function generator.

Dependency: Refer to: p1140, p1142

Caution: When "master control from PC" is activated, this binector input is ineffective.

Notice: The ramp-function generator is, independent of the state of the signal source, active in the following cases:
- OFF1/OFF3.
- ramp-function generator output within the suppression bandwidth.
- ramp-function generator output below the minimum speed.

p1142[0...n] BI: Enable setpoint/inhibit setpoint / Setpoint enable

SERVO_S110-DP, SERVO_S110-CAN, SERVO_S110-PN

Can be changed: T	**Calculated:** -	**Access level:** 3
Data type: Unsigned32 / Binary	**Dyn. index:** CDS, p0170	**Func. diagram:** 2501
P-Group: Setpoints	**Unit group:** -	**Unit selection:** -
Not for motor type: -	**Scaling:** -	**Expert list:** 1
Min	**Max**	**Factory setting**
-	-	1

Description: Sets the signal source for the command "enable setpoint/inhibit setpoint".
For the PROFIdrive profile, this command corresponds to control word 1 bit 6 (STW1.6).
BI: p1142 = 0 signal
Inhibits the setpoint (the ramp-function generator input is set to zero).
BI: p1142 = 1 signal
Setpoint enable.

Dependency: Refer to: p1140, p1141

Caution: When "master control from PC" is activated, this binector input is ineffective.

Notice: The parameter may be protected as a result of p0922 or p2079 and cannot be changed.

p1143[0...n] BI: Ramp-function generator, accept setting value / RFG accept set v

SERVO_S110-DP (Ext setp), SERVO_S110-CAN (Ext setp), SERVO_S110-PN (Ext setp)

Can be changed: T	**Calculated:** -	**Access level:** 3
Data type: Unsigned32 / Binary	**Dyn. index:** CDS, p0170	**Func. diagram:** 3060, 3070
P-Group: Setpoints	**Unit group:** -	**Unit selection:** -
Not for motor type: -	**Scaling:** -	**Expert list:** 1
Min	**Max**	**Factory setting**
-	-	0

Description: Sets the signal source for accepting the setting value of the ramp-function generator.

Dependency: The signal source for the ramp-function generator setting value is set using parameters.
Refer to: p1144

Note: 0/1 signal:
The ramp-function generator output is immediately (without delay) set to the setting value of the ramp-function generator.
1 signal:
The setting value of the ramp-function generator is effective.
1/0 signal:
The input value of the ramp-function generator is effective. The ramp-function generator output is adapted to the input value using the ramp-up time or the ramp-down time.
0 signal:
The input value of the ramp-function generator is effective.

p1144[0...n] CI: Ramp-function generator setting value / RFG setting value

SERVO_S110-DP (Ext setp), SERVO_S110-CAN (Ext setp), SERVO_S110-PN (Ext setp)

Can be changed: U, T	**Calculated:** -	**Access level:** 3
Data type: Unsigned32 / FloatingPoint32	**Dyn. index:** CDS, p0170	**Func. diagram:** 3060, 3070
P-Group: Setpoints	**Unit group:** -	**Unit selection:** -
Not for motor type: -	**Scaling:** p2000	**Expert list:** 1
Min	**Max**	**Factory setting**
-	-	0

Description: Sets the signal source for the ramp-function generator setting value.

Dependency: The signal source for accepting the setting value is set using parameters.
Refer to: p1143

p1145[0...n] Ramp-function generator tracking intensity. / RFG track intens

SERVO_S110-DP (Ext setp), SERVO_S110-CAN (Ext setp), SERVO_S110-PN (Ext setp)

Can be changed: U, T	**Calculated:** -	**Access level:** 3
Data type: FloatingPoint32	**Dyn. index:** DDS, p0180	**Func. diagram:** 3080
P-Group: Setpoints	**Unit group:** -	**Unit selection:** -
Not for motor type: -	**Scaling:** -	**Expert list:** 1
Min	**Max**	**Factory setting**
0.0	50.0	1.3

Description: Sets the ramp-function generator tracking.
The output value of the ramp-function generator is tracked (corrected) corresponding to the maximum possible drive acceleration. The reference value is the deviation at the speed/velocity controller input that is necessary to ensure that the motor accelerates at the torque/force limit.

Recommendation: p1145 = 0.0:
This value de-activates the ramp-function generator tracking.
p1145 = 0.0 ... 1.0:
Generally, these values are not practical. They cause the motor to accelerate below its torque limit. The lower the selected value, the greater the margin between the controller and torque limit when accelerating.
p1145 > 1.0:
The greater the value, the higher the permissible deviation between the speed setpoint and speed actual value.

Notice: If ramp-function generator tracking is activated and the ramp time is set too short, this can cause unsteady acceleration.
Remedy:
- switch off ramp-function generator tracking (p1145 = 0).
- increase the ramp-up/ramp-down time (p1120, p1121).

Note: In the U/f mode, ramp-function generator tracking is not active.
For SERVO with U/f operation, the following applies:
The complete ramp-function generator is not active, i.e. ramp-up and ramp-down time = 0.

p1148[0...n] Ramp-function gen. tolerance for ramp-up and ramp-down active / RFG tol HL/RL act

SERVO_S110-DP (Ext setp), SERVO_S110-CAN (Ext setp), SERVO_S110-PN (Ext setp)

Can be changed: U, T	**Calculated:** -	**Access level:** 3
Data type: FloatingPoint32	**Dyn. index:** DDS, p0180	**Func. diagram:** 3060, 3070
P-Group: Setpoints	**Unit group:** 3_1	**Unit selection:** p0505
Not for motor type: -	**Scaling:** -	**Expert list:** 1
Min	**Max**	**Factory setting**
0.000 [rpm]	1000.000 [rpm]	19.800 [rpm]

Description: Sets the tolerance value for the status of the ramp-function generator (ramp-up active, ramp-down active).
If the input of the ramp-function generator does not change in comparison to the output by more than the entered tolerance time, then the status bits "ramp-up active" and "ramp-down active" are not influenced.

Dependency: Refer to: r1199

r1149 CO: Ramp-function generator acceleration / RFG acceleration

SERVO_S110-DP (Ext setp), SERVO_S110-CAN (Ext setp), SERVO_S110-PN (Ext setp)

Can be changed: -	**Calculated:** -	**Access level:** 3
Data type: FloatingPoint32	**Dyn. index:** -	**Func. diagram:** 3060, 3070
P-Group: Setpoints	**Unit group:** 39_1	**Unit selection:** p0505
Not for motor type: -	**Scaling:** p2007	**Expert list:** 1
Min	**Max**	**Factory setting**
- [rev/s²]	- [rev/s²]	- [rev/s²]

Description: Displays the acceleration of the ramp-function generator.

Dependency: Refer to: p1145

r1150 CO: Ramp-function generator speed setpoint at the output / RFG n_set at outp

SERVO_S110-DP (Ext setp), SERVO_S110-CAN (Ext setp), SERVO_S110-PN (Ext setp)

Can be changed: -	**Calculated:** -	**Access level:** 3
Data type: FloatingPoint32	**Dyn. index:** -	**Func. diagram:** 1550, 3080
P-Group: Setpoints	**Unit group:** 3_1	**Unit selection:** p0505
Not for motor type: -	**Scaling:** p2000	**Expert list:** 1
Min	**Max**	**Factory setting**
- [rpm]	- [rpm]	- [rpm]

Description: Displays the setpoint at the output of the ramp-function generator.

p1151[0...n] Ramp-function generator configuration / RFG config

SERVO_S110-DP (Ext setp), SERVO_S110-CAN (Ext setp), SERVO_S110-PN (Ext setp)

Can be changed: U, T	**Calculated:** -	**Access level:** 2
Data type: Unsigned16	**Dyn. index:** DDS, p0180	**Func. diagram:** 3070
P-Group: Setpoints	**Unit group:** -	**Unit selection:** -
Not for motor type: -	**Scaling:** -	**Expert list:** 1
Min	**Max**	**Factory setting**
-	-	0000 bin

Description: Sets the configuration for the extended ramp-function generator.

Bit field:

Bit	Signal name	1 signal	0 signal	FP
00	Disable rounding-off at the zero cross-over	Yes	No	3070

Caution: Re bit 00 = 1:
If the ramp-up time is longer than the ramp-down time (p1120 > p1121), then there is an acceleration step at the zero crossover. This can have a negative impact on the mechanical system.

Note: Re bit 00 = 1:
When the direction change is changed there is no rounding-off before and after the zero crossover.

p1152 BI: Setpoint 2 enable / Setp 2 enab

SERVO_S110-DP (Ext brake), SERVO_S110-CAN (Ext brake), SERVO_S110-PN (Ext brake)

Can be changed: T	**Calculated:** -	**Access level:** 3
Data type: Unsigned32 / Binary	**Dyn. index:** -	**Func. diagram:** 2711, 4015
P-Group: Commands	**Unit group:** -	**Unit selection:** -
Not for motor type: -	**Scaling:** -	**Expert list:** 1
Min	**Max**	**Factory setting**
-	-	899.15

Description: Sets the signal source for "setpoint 2 enable".

p1155[0...n] CI: Speed controller speed setpoint 1 / n_ctrl n_set 1

SERVO_S110-DP, SERVO_S110-CAN, SERVO_S110-PN

Can be changed: T	**Calculated:** -	**Access level:** 3
Data type: Unsigned32 / FloatingPoint32	**Dyn. index:** CDS, p0170	**Func. diagram:** 1550, 3080, 5030, 6031
P-Group: Setpoints	**Unit group:** -	**Unit selection:** -
Not for motor type: -	**Scaling:** p2000	**Expert list:** 1
Min	**Max**	**Factory setting**
-	-	0

Description: Sets the signal source for speed setpoint 1 of the speed controller.

Dependency: The effectiveness of this setpoint depends on, e.g. STW1.4 and STW1.6.

Refer to: r0002, p0840, p0844, p0848, p0852, p0854, r0898, p1140, p1142, p1160, r1170, p1189, p1414, p1417, p1418

Notice: The parameter may be protected as a result of p0922 or p2079 and cannot be changed.

p1160[0...n] CI: Speed controller speed setpoint 2 / n_ctrl n_set 2

SERVO_S110-DP, SERVO_S110-CAN, SERVO_S110-PN

Can be changed: T	**Calculated:** -	**Access level:** 3
Data type: Unsigned32 / FloatingPoint32	**Dyn. index:** CDS, p0170	**Func. diagram:** 1550, 3080
P-Group: Setpoints	**Unit group:** -	**Unit selection:** -
Not for motor type: -	**Scaling:** p2000	**Expert list:** 1
Min	**Max**	**Factory setting**
-	-	0

Description: Sets the signal source for speed setpoint 2 of the speed controller.

Dependency: Refer to: p1155, r1170

Note: For OFF1/OFF3, the ramp-function generator ramp is effective.

The ramp-function generator is set to the actual value and stops the drive corresponding to the ramp-downtime (p1121 or p1135). While stopping via the ramp-function generator, STW1.4 is effective (enable ramp-function generator).

When the function module "position control" (r0108.3 = 1) is activated, this connector input is interconnected as follows as standard:

CI: p1160 = r2562

r1169 CO: Speed controller speed setpoints 1 and 2 / n_ctrl n_set 1/2

SERVO_S110-DP, SERVO_S110-CAN, SERVO_S110-PN

Can be changed: -	**Calculated:** -	**Access level:** 3
Data type: FloatingPoint32	**Dyn. index:** -	**Func. diagram:** 3080
P-Group: Setpoints	**Unit group:** 3_1	**Unit selection:** p0505
Not for motor type: -	**Scaling:** p2000	**Expert list:** 1
Min	**Max**	**Factory setting**
- [rpm]	- [rpm]	- [rpm]

Description: Displays the speed setpoint after the addition of the speed setpoint 1 (p1155) and speed setpoint 2 (p1160).

Dependency: Refer to: p1155, p1160

Note: The value is only correctly displayed at r0899.2 = 1 (operation enabled).

r1170 CO: Speed controller setpoint sum / n_ctrl setp sum

SERVO_S110-DP, SERVO_S110-CAN, SERVO_S110-PN

Can be changed: -	**Calculated:** -	**Access level:** 3
Data type: FloatingPoint32	**Dyn. index:** -	**Func. diagram:** 1550, 1590, 1690, 1700, 1750, 3080, 5020, 6030
P-Group: Setpoints	**Unit group:** 3_1	**Unit selection:** p0505
Not for motor type: -	**Scaling:** p2000	**Expert list:** 1
Min	**Max**	**Factory setting**
- [rpm]	- [rpm]	- [rpm]

Description: Displays the speed setpoint after selecting the ramp-function generator and adding the speed setpoint 1 (p1155) and speed setpoint 2 (p1160).

Dependency: Refer to: r1150, p1155, p1160

p1189[0...n] Speed setpoint configuration / n_ctrl config

SERVO_S110-DP, SERVO_S110-CAN, SERVO_S110-PN

Can be changed: U, T	**Calculated:** -	**Access level:** 2
Data type: Unsigned16	**Dyn. index:** DDS, p0180	**Func. diagram:** 3080
P-Group: Setpoints	**Unit group:** -	**Unit selection:** -
Not for motor type: -	**Scaling:** -	**Expert list:** 1
Min	**Max**	**Factory setting**
-	-	0011 bin

Description: Sets the configuration for the speed setpoint.

Bit field:

Bit	Signal name	1 signal	0 signal	FP
00	Interpolation ramp-fct gen/speed controller active	Yes	No	3080
01	Interpol. op-loop ctrl /speed controller active	Yes	No	3080

Note: Re bit 01:
The interpolator is only effective in following cases:
- isochronous PROFIBUS operation with a sign-of-life received from the master (STW2.12 ... STW2.15).
- speed setpoint 1 and/or 2 is supplied from the technology controller (CI: p1155 = r2294, CI: p1160 = r2294).

p1190 CI: DSC position deviation XERR / DSC XERR

SERVO_S110-DP, SERVO_S110-CAN, SERVO_S110-PN

Can be changed: T	**Calculated:** -	**Access level:** 3
Data type: Unsigned32 / Integer32	**Dyn. index:** -	**Func. diagram:** 1550
P-Group: Setpoints	**Unit group:** -	**Unit selection:** -
Not for motor type: -	**Scaling:** -	**Expert list:** 1
Min	**Max**	**Factory setting**
-	-	0

Description: Sets the signal source for the position deviation XERR for DSC (position controller output of the higher-level control).

Dependency: Clock cycle synchronous operation must be activated for DSC.
The position controller gain factor (KPC), the position deviation (XERR) and the speed setpoint (N_SOLL_B) must be included in the setpoint telegram.
At least the encoder interface (Gx_XIST1) must be included in the actual value telegram.
The position actual value used for the internal position controller can be selected using p1192.
Refer to: p1191, p1192

Notice: The parameter may be protected as a result of p0922 or p2079 and cannot be changed.
The parameter can only be interconnected to a signal source with Integer32 data type.

Note: DSC: Dynamic Servo Control

p1191 CI: DSC position controller gain KPC / DSC KPC

SERVO_S110-DP, SERVO_S110-CAN, SERVO_S110-PN

Can be changed: T	**Calculated:** -	**Access level:** 3
Data type: Unsigned32 / FloatingPoint32	**Dyn. index:** -	**Func. diagram:** 1550
P-Group: Setpoints	**Unit group:** -	**Unit selection:** -
Not for motor type: -	**Scaling:** -	**Expert list:** 1
Min	**Max**	**Factory setting**
-	-	0

Description: Sets the signal source for the position controller gain KPC for DSC.

Dependency: Clock cycle synchronous operation must be activated for DSC.
Refer to: p1190

Notice: The parameter may be protected as a result of p0922 or p2079 and cannot be changed.

Note: DSC: Dynamic Servo Control

p1192[0...n] DSC enc selection / DSC enc selection

SERVO_S110-DP, SERVO_S110-CAN, SERVO_S110-PN

Can be changed: U, T	**Calculated:** -	**Access level:** 3
Data type: Integer16	**Dyn. index:** DDS, p0180	**Func. diagram:** -
P-Group: Setpoints	**Unit group:** -	**Unit selection:** -
Not for motor type: -	**Scaling:** -	**Expert list:** 1
Min	**Max**	**Factory setting**
1	3	1

Description: Sets the number of the encoder used for DSC.

Value:
1: Encoder 1 (motor encoder)
2: Encoder 2
3: Reserved

Note: DSC: Dynamic Servo Control

Value 1 corresponds to encoder 1 (motor encoder); the encoder data set is assigned via p0187.

Value 2 corresponds to encoder 2; the encoder data set is assigned via p0188.

p1193[0...n] DSC encoder adaptation factor / DSC encodAdaptFact

SERVO_S110-DP, SERVO_S110-CAN, SERVO_S110-PN

Can be changed: U, T	**Calculated:** -	**Access level:** 3
Data type: FloatingPoint32	**Dyn. index:** DDS, p0180	**Func. diagram:** -
P-Group: Setpoints	**Unit group:** -	**Unit selection:** -
Not for motor type: -	**Scaling:** -	**Expert list:** 1
Min	**Max**	**Factory setting**
0.000	1000000.000	1.000

Description: Sets the factor to adapt the encoder when using either encoder 2 or 3 for DSC.

The factor sets the ratio of the pulse difference between the motor encoder and the selected encoder for the same distance moved through.

This factor takes into account e.g. gear ratios, differences in the number of encoder pulses.

Dependency: Refer to: p1192

Note: DSC: Dynamic Servo Control

Example:

Encoder 1: Motor encoder with 2048 pulses/revolution, ballscrew with 10 mm/revolution pitch

Encoder 2: Linear scale with 20 µm grid division as direct measuring system

p1193 = number of pulses, encoder 1 per motor revolution / number of pulses, encoder 2 per motor revolution

p1193 = 2048 / (10 mm / 20 µm) = 4.096

r1197 Fixed speed setpoint number actual / n_set_fixed No act

SERVO_S110-DP (Ext setp), SERVO_S110-CAN (Ext setp), SERVO_S110-PN (Ext setp)

Can be changed: -	**Calculated:** -	**Access level:** 3
Data type: Unsigned32	**Dyn. index:** -	**Func. diagram:** 3010
P-Group: Setpoints	**Unit group:** -	**Unit selection:** -
Not for motor type: -	**Scaling:** -	**Expert list:** 1
Min	**Max**	**Factory setting**
-	-	-

Description: Displays the number of the selected fixed speed/velocity setpoint.

Dependency: Refer to: p1020, p1021, p1022, p1023

Note: If a fixed speed setpoint has not been selected (p1020 ... p1023 = 0, r1197 = 0), then r1024 = 0 (setpoint = 0).

r1198.0...15 CO/BO: Control word setpoint channel / STW setpoint chan

SERVO_S110-DP (Ext setp), SERVO_S110-CAN (Ext setp), SERVO_S110-PN (Ext setp)

Can be changed: -	**Calculated:** -	**Access level:** 3
Data type: Unsigned16	**Dyn. index:** -	**Func. diagram:** 1530, 2505
P-Group: Setpoints	**Unit group:** -	**Unit selection:** -
Not for motor type: -	**Scaling:** -	**Expert list:** 1
Min	**Max**	**Factory setting**
-	-	-

Description: Displays the control word for the setpoint channel.

Bit field:

Bit	Signal name	1 signal	0 signal	FP
00	Fixed setp bit 0	Yes	No	3010
01	Fixed setp bit 1	Yes	No	3010
02	Fixed setp bit 2	Yes	No	3010
03	Fixed setp bit 3	Yes	No	3010
05	Inhibit negative direction	Yes	No	3040
06	Inhibit positive direction	Yes	No	3040
11	Setpoint inversion	Yes	No	3040
13	Motorized potentiometer raise	Yes	No	3020
14	Motorized potentiometer lower	Yes	No	3020
15	Bypass ramp-function generator	Yes	No	3060, 3070

r1199.0...6 CO/BO: Ramp-function generator status word / RFG ZSW

SERVO_S110-DP (Ext setp), SERVO_S110-CAN (Ext setp), SERVO_S110-PN (Ext setp)

Can be changed: -	**Calculated:** -	**Access level:** 3
Data type: Unsigned16	**Dyn. index:** -	**Func. diagram:** 1550, 3080, 8010
P-Group: Setpoints	**Unit group:** -	**Unit selection:** -
Not for motor type: -	**Scaling:** -	**Expert list:** 1
Min	**Max**	**Factory setting**
-	-	-

Description: Displays the status word for the ramp-function generator (RFG).

Bit field:

Bit	Signal name	1 signal	0 signal	FP
00	Ramp-up active	Yes	No	-
01	Ramp-down active	Yes	No	-
02	RFG active	Yes	No	-
03	Ramp-function generator set	Yes	No	-
04	Ramp-function generator held	Yes	No	-
05	Ramp-function generator tracking active	Yes	No	-
06	Maximum limit active	Yes	No	-

Note: Re bit 02:
The bit is an OR logic operation - bit 00 and bit 01.

p1206[0...9] Set the fault number without automatic restart / Fault_No w/o AR

SERVO_S110-DP, SERVO_S110-CAN, SERVO_S110-PN

Can be changed: U, T	**Calculated:** -	**Access level:** 3
Data type: Unsigned16	**Dyn. index:** -	**Func. diagram:** -
P-Group: Functions	**Unit group:** -	**Unit selection:** -
Not for motor type: -	**Scaling:** -	**Expert list:** 1
Min	**Max**	**Factory setting**
0	65535	0

Description: Selects the faults for which automatic restart should not be effective.

Dependency: The setting is only effective for p1210 = 6, 16.
Refer to: p1210

p1208[0...1] BI: AR modification infeed / AR modification

SERVO_S110-DP, SERVO_S110-CAN, SERVO_S110-PN

Can be changed: U, T	**Calculated:** -	**Access level:** 3
Data type: Unsigned32 / Binary	**Dyn. index:** -	**Func. diagram:** -
P-Group: Functions	**Unit group:** -	**Unit selection:** -
Not for motor type: -	**Scaling:** -	**Expert list:** 1
Min	**Max**	**Factory setting**
-	-	0

Description: Sets the signal source to modify the automatic restart (AR).

Interconnections between the automatic restart and infeed:

With the following interconnection in the mode p1210 = 6, the automatic restart can respond to infeed faults:

BI: p1208[0] = r2139.3

With the following interconnection, in the mode p1210 = 4, the automatic restart can respond to line supply failure of the infeed:

BI: p1208[1] = r0863.2

Index: [0] = Infeed fault
[1] = Infeed line supply failure

Dependency: Refer to: r0863, r2139

p1210 Automatic restart mode / AR mode

SERVO_S110-DP, SERVO_S110-CAN, SERVO_S110-PN

Can be changed: U, T	**Calculated:** -	**Access level:** 2
Data type: Integer16	**Dyn. index:** -	**Func. diagram:** -
P-Group: Functions	**Unit group:** -	**Unit selection:** -
Not for motor type: -	**Scaling:** -	**Expert list:** 1
Min	**Max**	**Factory setting**
0	16	0

Description: Sets the automatic restart mode (AR).

Value:
0: Inhibit automatic restart
1: Acknowledge all faults without restarting
4: Restart after line supply failure w/o additional start attempts
6: Restart after fault with additional start attempts
14: Restart after line supply failure following man. acknowledgment
16: Restart after fault following manual acknowledgment

Dependency: The automatic restart requires an active ON command (e.g., via a digital input). If, for p1210 > 1, there is no active ON command, then the automatic restart is interrupted.

When using an Operator Panel in the LOCAL mode, then there is no automatic start.

For p1210 = 14, 16, a manual acknowledgement is required for an automatic restart.

Refer to: p0840, p0857

Refer to: F30003

Danger: If the automatic restart is activated (p1210 > 1) if there is an ON command (refer to p0840), the drive is powered up as soon as any fault messages that are present can be acknowledged. This also occurs after the line supply returns or the Control Unit boots if the DC link voltage is again present or the feedback of the line supply infeed (refer to p0864) is again available. This automatic power-up sequence can only be interrupted by withdrawing the ON command.

Caution: A change is only accepted and made in the state "initialization" (r1214.0) and "wait for alarm" (r1214.1). When faults are present, therefore, the parameter cannot be changed.

For p1210 > 1, the motor is automatically started.

Note: Re p1210 = 1:

Faults that are present are automatically acknowledged. If new faults occur after a successful fault acknowledgment, then these are also automatically acknowledged again. p1211 has no influence on the number of acknowledgment attempts.

Re p1210 = 4:

An automatic restart is only carried out if fault F30003 occurred at the Motor Module or a 1 signal is present at binector input p1208[1]. If additional faults are present, then these faults are also acknowledged and when successful, starting continues. If the 24 V Control Unit power supply fails, then this is interpreted as a line supply failure.

Re p1210 = 6:
An automatic restart is carried out if any fault has occurred or there is a 1 signal at binector input p1208[0].
Re p1210 = 14:
As for p1210 = 4. However, faults that are present must be manually acknowledged.
Re p1210 = 16:
As for p1210 = 6. However, faults that are present must be manually acknowledged.

p1211 Automatic restart start attempts / AR start attempts

SERVO_S110-DP, SERVO_S110-CAN, SERVO_S110-PN

Can be changed: U, T	**Calculated:** -	**Access level:** 3
Data type: Unsigned16	**Dyn. index:** -	**Func. diagram:** -
P-Group: Functions	**Unit group:** -	**Unit selection:** -
Not for motor type: -	**Scaling:** -	**Expert list:** 1
Min	**Max**	**Factory setting**
0	10	3

Description: Sets the start attempts of the automatic restart function for p1210 = 4, 6.

Dependency: Refer to: p1210, r1214
Refer to: F07320

Caution: A change is only accepted and made in the state "initialization" (r1214.0) and "wait for alarm" (r1214.1).

Notice: After fault F07320 occurs, the power-on command must be withdrawn and all of the faults acknowledged so that the automatic restart function is re-activated.
After a complete power failure the start counter always starts with the counter value that applied before the power failure, and decrements this start attempt by 1. If a further attempt to acknowledge is started by the automatic restart function prior to power failure, e.g. when the CU remains active on power failure longer than the time p1212 / 2, the fault counter will already have been decremented once. In this case, the start counter is thus decreased by the value 2.

Note: A start attempt starts immediately when a fault occurs. The start attempt is considered to been completed if the motor was magnetized (r0056.4 = 1) and an additional delay time of 1 s has expired.
As long as a fault is present, an acknowledge command is generated in the time intervals of p1212 / 2. When successfully acknowledged, the start counter is decremented. If, after this, a fault re-occurs before a restart has been completed, then acknowledgement starts again from the beginning.
Fault F07320 is output if, after several faults occur, the number of parameterized start attempts has been reached. After a successful start attempt, i.e. a fault/error has no longer occurred up to the end of the magnetizing phase, the start counter is again reset to the parameter value after 1 s. If a fault re-occurs - the parameterized number of start attempts is again available.
At least one start attempt is always carried out.
After a line supply failure, acknowledgement is immediate and when the line supply returns, the system is powered up. If, between successfully acknowledging the line fault and the line supply returning, another fault occurs, then its acknowledgement also causes the start counter to be decremented.

p1212 Automatic restart delay time start attempts / AR t_wait start

SERVO_S110-DP, SERVO_S110-CAN, SERVO_S110-PN

Can be changed: U, T	**Calculated:** -	**Access level:** 3
Data type: FloatingPoint32	**Dyn. index:** -	**Func. diagram:** -
P-Group: Functions	**Unit group:** -	**Unit selection:** -
Not for motor type: -	**Scaling:** -	**Expert list:** 1
Min	**Max**	**Factory setting**
0.1 [s]	1000.0 [s]	1.0 [s]

Description: Sets the delay time up to restart.

Dependency: This parameter setting is active for p1210 = 4, 6.
For p1210 = 1, the following applies: Faults are only automatically acknowledged in half of the delay time, no restart.
Refer to: p1210, r1214

Caution: A change is only accepted and made in the state "initialization" (r1214.0) and "wait for alarm" (r1214.1).

Note: The faults are automatically acknowledged after half of the delay time has expired and the full delay time.
If the cause of a fault is not removed in the first half of the delay time, then it is no longer possible to acknowledge in the delay time.

p1213[0...1] Automatic restart monitoring time / AR t_monitoring

SERVO_S110-DP, SERVO_S110-CAN, SERVO_S110-PN

Can be changed: U, T	**Calculated:** -	**Access level:** 3
Data type: FloatingPoint32	**Dyn. index:** -	**Func. diagram:** -
P-Group: Functions	**Unit group:** -	**Unit selection:** -
Not for motor type: -	**Scaling:** -	**Expert list:** 1
Min	**Max**	**Factory setting**
0.0 [s]	10000.0 [s]	0.0 [s]

Description: Sets the monitoring time of the automatic restart (AR).

Index: [0] = For restart
[1] = To reset the start counter

Dependency: Refer to: p1210, r1214

Caution: A change is only accepted and made in the state "initialization" (r1214.0) and "wait for alarm" (r1214.1).

Notice: After fault F07320 occurs, the power-on command must be withdrawn and all of the faults acknowledged so that the automatic restart function is re-activated.

Note: Index 0:

The monitoring time starts when the faults are detected. If the automatic acknowledgements are not successful, the monitoring time runs again. If, after the monitoring time has expired, the drive has still not successfully started again (flying restart and magnetizing of the motor must have been completed: r0056.4 = 1), then fault F07320 is output.

The monitoring is de-activated with p1213 = 0. If p1213 is set lower than the sum of p1212, the magnetizing time p0346 and the additional delay time due to the flying restart, then fault F07320 is generated at each restart. If, for p1210 = 1, the time in p1213 is set lower than in p1212, then fault F07320 is also generated at each restart.

The monitoring time must be extended if the faults that occur cannot be immediately and successfully acknowledged (e.g. for faults that are permanently present).

In the case of p1210 = 14, 16, the faults which are present must be acknowledged manually within the time in p1213 index 0. Otherwise, fault F07320 is generated after the set time.

Index 1:

The start counter (refer to r1214) is only set back to the starting value p1211 if, after successful restart, the time in p1213 index 1 has expired. The delay time is not effective for fault acknowledgement without automatic restart (p1210 = 1). After a power failure (blackout) the delay time only starts after the line supply returns and the Control Unit boots. The start counter is set to p1211, if F07320 occurred, the power-on command is withdrawn and the fault is acknowledged.

The start counter is immediately updated if the starting value p1211 or the mode p1210 is changed.

r1214.0...15 CO/BO: Automatic restart status / AR status

SERVO_S110-DP, SERVO_S110-CAN, SERVO_S110-PN

Can be changed: -	**Calculated:** -	**Access level:** 3
Data type: Unsigned16	**Dyn. index:** -	**Func. diagram:** -
P-Group: Functions	**Unit group:** -	**Unit selection:** -
Not for motor type: -	**Scaling:** -	**Expert list:** 1
Min	**Max**	**Factory setting**
-	-	-

Description: Displays the status of the automatic restart (AR).

Bit field:

Bit	Signal name	1 signal	0 signal	FP
00	Initialization	Yes	No	-
01	Wait for alarm	Yes	No	-
02	Auto restart act	Yes	No	-
03	Setting the acknowledgement command	Yes	No	-
04	Acknowledge alarms	Yes	No	-
05	Restart	Yes	No	-
06	Delay time running after automatic power-up	Yes	No	-
07	Fault	Yes	No	-
10	Effective fault	Yes	No	-
12	Start count. bit 0	ON	OFF	-
13	Start count. bit 1	ON	OFF	-
14	Start count. bit 2	ON	OFF	-
15	Start count. bit 3	ON	OFF	-

Note: Re bit 00:

State to display the single initialization after POWER ON.

Re bit 01:

State in which the automatic restart function waits for faults (initial state).

Re bit 02:

General display that a fault has been identified and that the restart or acknowledgement has been initiated.

Re bit 03:

Displays the acknowledge command within the "acknowledge alarms" state (bit 4 = 1). For bit 5 = 1 or bit 6 = 1, the acknowledge command is continually displayed.

Re bit 04:

State in which the faults that are present are acknowledged. The state is exited again after successful acknowledgement. A change is only made into the next state if it is signaled that a fault is no longer present after an acknowledgement command (bit 3 = 1).

Re bit 05:

State in which the drive is automatically powered up (only for p1210 = 4, 6).

Re bit 06:

State in which the system waits after having been powered up, to the end of the start attempt (to the end of the magnetizing process).

For p1210 = 1, this signal is directly set after the faults have been successfully acknowledged.

Re bit 07:

State which is assumed after a fault occurs within the automatic restart function. This is only reset after acknowledging the fault and withdrawing the power-on command.

Re bit 10:

When the automatic restart function is active, r1214 bit 7 is displayed, otherwise the effective fault r2139 bit 3.

Re bits 12 ... 15:

Actual state of the start counter (binary coded).

p1215 Motor holding brake configuration / Brake config

SERVO_S110-DP, SERVO_S110-CAN, SERVO_S110-PN

Can be changed: T	**Calculated:** -	**Access level:** 2
Data type: Integer16	**Dyn. index:** -	**Func. diagram:** 2701, 2707, 2711
P-Group: Functions	**Unit group:** -	**Unit selection:** -
Not for motor type: -	**Scaling:** -	**Expert list:** 1
Min	**Max**	**Factory setting**
0	3	0

Description: Sets the holding brake configuration.

Value:
0: No motor holding brake available
1: Motor holding brake acc. to sequence control
2: Motor holding brake always open
3: Motor holding brake like sequence control connection via BICO

Dependency: Refer to: p1216, p1217, p1226, p1227, p1228, p1278

Caution: For the setting p1215 = 0, if a brake is used, it remains closed. If the motor moves, this will destroy the brake.

Notice: If p1215 was set to 1 or if p1215 was set to 3, then when the pulses are suppressed, the brake is closed even if the motor is still rotating. Pulse suppression can either be caused by a 0 signal at p0844, p0845 or p0852 or as a result of a fault with OFF2 response. If this is not desirable (e.g. for a flying restart), then the brake can be kept open using a 1 signal at p0855.

Note: If the configuration is set to "no holding brake present" when booting, then the motor holding brake will be automatically identified. If a motor holding brake is detected, the configuration is set to "motor holding brake as for sequence control".

If a holding brake integrated in the motor is used, then it is not permissible that p1215 is set to 3.

if an external motor holding brake is being used, then p1215 should be set to 3 and r0899.12 should be interconnected as control signal.

When the function module "extended brake control" is activated (r0108.14 = 1), r1229.1 should be interconnected as control signal.

The parameter can only be set to zero when the pulses are inhibited.

The parameterization "no motor holding brake available" and "Safe Brake Control" enabled (p1215 = 0, p9602 = 1, p9802 = 1) is not practical if there is no motor holding brake.

The parameterization "motor holding brake the same as sequence control, connection via BICO" and "Safe Brake Control" enabled (p1215 = 3, p9602 = 1, p9802 = 1) is not practical.

p1216 Motor holding brake opening time / Brake t_open

SERVO_S110-DP, SERVO_S110-CAN, SERVO_S110-PN

Can be changed: U, T	**Calculated:** -	**Access level:** 2
Data type: FloatingPoint32	**Dyn. index:** -	**Func. diagram:** 2701, 2711
P-Group: Functions	**Unit group:** -	**Unit selection:** -
Not for motor type: -	**Scaling:** -	**Expert list:** 1
Min	**Max**	**Factory setting**
0 [ms]	10000 [ms]	100 [ms]

Description: Sets the time to open the motor holding brake.

After controlling the holding brake (opens), the speed/velocity setpoint remains at zero for this time. After this, the speed/velocity setpoint is enabled.

Recommendation: This time should be set longer than the actual opening time of the brake. This ensures that the drive cannot accelerate when the brake is applied.

Dependency: Refer to: p1215, p1217

p1217 Motor holding brake closing time / Brake t_close

SERVO_S110-DP, SERVO_S110-CAN, SERVO_S110-PN

Can be changed: U, T	**Calculated:** -	**Access level:** 2
Data type: FloatingPoint32	**Dyn. index:** -	**Func. diagram:** 2701, 2711
P-Group: Functions	**Unit group:** -	**Unit selection:** -
Not for motor type: -	**Scaling:** -	**Expert list:** 1
Min	**Max**	**Factory setting**
0 [ms]	10000 [ms]	100 [ms]

Description: Sets the time to apply the motor holding brake.

After OFF1 or OFF3 and the holding brake is controlled (the brake closes), then the drive remains closed-loop controlled for this time stationary with a speed setpoint/velocity setpoint of zero. The pulses are suppressed when the time expires.

Recommendation: This time should be set longer than the actual closing time of the brake. This ensures that the pulses are only suppressed after the brake has closed.

Dependency: Refer to: p1215, p1216

Notice: If the selected closing time is too short with respect to the actual closing time of the brake, then the load can sag.

If the closing time is selected to be too long with respect to the actual closing time of the brake, the control works against the brake and therefore reduces its lifetime.

p1218[0...1] BI: Open motor holding brake / Open brake

SERVO_S110-DP (Ext brake), SERVO_S110-CAN (Ext brake), SERVO_S110-PN (Ext brake)

Can be changed: T	**Calculated:** -	**Access level:** 2
Data type: Unsigned32 / Binary	**Dyn. index:** -	**Func. diagram:** 2707
P-Group: Functions	**Unit group:** -	**Unit selection:** -
Not for motor type: -	**Scaling:** -	**Expert list:** 1
Min	**Max**	**Factory setting**
-	-	1

Description: Sets the signal source for a conditional opening of the motor holding brake.

Dependency: Refer to: p1215

Note: [0]: Signal, open brake, AND logic operation, input 1

[1]: Signal, open brake, AND logic operation, input 2

p1219[0...3] BI: Immediately close motor holding brake / Close brake

SERVO_S110-DP (Ext brake), SERVO_S110-CAN (Ext brake), SERVO_S110-PN (Ext brake)

Can be changed: T	**Calculated:** -	**Access level:** 2
Data type: Unsigned32 / Binary	**Dyn. index:** -	**Func. diagram:** 2707
P-Group: Functions	**Unit group:** -	**Unit selection:** -
Not for motor type: -	**Scaling:** -	**Expert list:** 1
Min	**Max**	**Factory setting**
-	-	[0] 0 [1] 0 [2] 0 [3] 1229.9

Description: Sets the signal source for an unconditional (immediate) closing of the motor holding brake.

Dependency: Refer to: p1215, p1275

Note: [0]: Signal, immediately close brake, inversion via p1275.0
[1]: Signal, immediately close brake, inversion via p1275.1
[2]: Signal, immediately close brake
[3]: Signal, immediately close brake - refer to the factory setting
These four signals form an OR logic operation.

p1220 CI: Open motor holding brake signal source threshold / Open brake thresh

SERVO_S110-DP (Ext brake), SERVO_S110-CAN (Ext brake), SERVO_S110-PN (Ext brake)

Can be changed: T	**Calculated:** -	**Access level:** 2
Data type: Unsigned32 / FloatingPoint32	**Dyn. index:** -	**Func. diagram:** 2707
P-Group: Functions	**Unit group:** -	**Unit selection:** -
Not for motor type: -	**Scaling:** PERCENT	**Expert list:** 1
Min	**Max**	**Factory setting**
-	-	1

Description: Sets the signal source for the command "open brake".

Dependency: Refer to: p1215, p1221, r1229, p1277

p1221 Open motor holding brake threshold / Open brake thresh

SERVO_S110-DP (Ext brake), SERVO_S110-CAN (Ext brake), SERVO_S110-PN (Ext brake)

Can be changed: U, T	**Calculated:** -	**Access level:** 2
Data type: FloatingPoint32	**Dyn. index:** -	**Func. diagram:** 2707
P-Group: Functions	**Unit group:** -	**Unit selection:** -
Not for motor type: -	**Scaling:** -	**Expert list:** 1
Min	**Max**	**Factory setting**
0.00 [%]	200.00 [%]	0.00 [%]

Description: Sets the threshold value for the command "open brake".

Dependency: Refer to: p1220, r1229, p1277

p1222 BI: Motor holding brake feedback signal brake closed / Brake feedb closed

SERVO_S110-DP (Ext brake), SERVO_S110-CAN (Ext brake), SERVO_S110-PN (Ext brake)

Can be changed: T	**Calculated:** -	**Access level:** 2
Data type: Unsigned32 / Binary	**Dyn. index:** -	**Func. diagram:** 2711
P-Group: Functions	**Unit group:** -	**Unit selection:** -
Not for motor type: -	**Scaling:** -	**Expert list:** 1
Min	**Max**	**Factory setting**
-	-	0

Description: Sets the signal source for the feedback signal "brake closed".
For motor holding brakes with feedback signal, the signal "brake closed" can be activated using p1275.5 = 1.

Dependency: Refer to: p1223, p1275

Note: 1 signal: Brake closed.
When braking with 1 feedback signal, the inverted feedback signal is connected to the BICO input for the second feedback signal (p1223).
For r1229.5 = 1, OFF1/OFF3 are suppressed to prevent the drive accelerating by a load that drives the motor - whereby OFF2 remains effective.

p1223 BI: Motor holding brake feedback signal brake open / Brake feedb open

SERVO_S110-DP (Ext brake), SERVO_S110-CAN (Ext brake), SERVO_S110-PN (Ext brake)

Can be changed: T	**Calculated:** -	**Access level:** 2
Data type: Unsigned32 / Binary	**Dyn. index:** -	**Func. diagram:** 2711
P-Group: Functions	**Unit group:** -	**Unit selection:** -
Not for motor type: -	**Scaling:** -	**Expert list:** 1
Min	**Max**	**Factory setting**
-	-	1

Description: Sets the signal source for the feedback signal "brake open".
For motor holding brakes with feedback signal, the signal "brake open" can be activated using p1275.5 = 1.
Dependency: Refer to: p1222, p1275
Note: 1 signal: Brake open.
When braking with 1 feedback signal, the inverted feedback signal is connected to the BICO input for the second feedback signal (p1222).

p1224[0...3] BI: Close motor holding brake at standstill / Brk close standst

SERVO_S110-DP (Ext brake), SERVO_S110-CAN (Ext brake), SERVO_S110-PN (Ext brake)

Can be changed: T	**Calculated:** -	**Access level:** 2
Data type: Unsigned32 / Binary	**Dyn. index:** -	**Func. diagram:** 2704
P-Group: Functions	**Unit group:** -	**Unit selection:** -
Not for motor type: -	**Scaling:** -	**Expert list:** 1
Min	**Max**	**Factory setting**
-	-	0

Description: Sets the signal source for close brake at standstill.
Dependency: Refer to: p1275
Note: [0]: Signal, close brake at standstill, inversion via p1275.2
[1]: Signal, close brake at standstill, inversion via p1275.3
[2]: Signal, close brake at standstill
[3]: Signal, close brake at standstill
These four signals form an OR logic operation.

p1225 CI: Standstill detection threshold value / Standstill thresh

SERVO_S110-DP (Ext brake), SERVO_S110-CAN (Ext brake), SERVO_S110-PN (Ext brake)

Can be changed: T	**Calculated:** -	**Access level:** 2
Data type: Unsigned32 / FloatingPoint32	**Dyn. index:** -	**Func. diagram:** 2704
P-Group: Functions	**Unit group:** -	**Unit selection:** -
Not for motor type: -	**Scaling:** p2000	**Expert list:** 1
Min	**Max**	**Factory setting**
-	-	63[0]

Description: Sets the signal source "threshold value" for the standstill identification.
Dependency: Refer to: p1226, p1228, r1229

p1226[0...n] Threshold for zero speed detection / n_standst n_thresh

SERVO_S110-DP, SERVO_S110-CAN, SERVO_S110-PN

Can be changed: U, T	**Calculated:** -	**Access level:** 2
Data type: FloatingPoint32	**Dyn. index:** DDS, p0180	**Func. diagram:** 2701, 2704
P-Group: Functions	**Unit group:** 3_1	**Unit selection:** p0505
Not for motor type: -	**Scaling:** -	**Expert list:** 1
Min	**Max**	**Factory setting**
0.00 [rpm]	210000.00 [rpm]	20.00 [rpm]

Description: Sets the speed threshold for the standstill identification.

Acts on the actual value and setpoint monitoring.
When braking with OFF1 or OFF3, when the threshold is undershot, standstill is identified.
The following applies when the brake control is activated:
When the threshold is undershot, the brake control is started and the system waits for the brake closing time in p1217. The pulses are then suppressed.
if the brake control is not activated, the following applies:
When the threshold is undershot, the pulses are suppressed and the drive coasts down.

Dependency: Refer to: p1215, p1216, p1217, p1227

Notice: For reasons relating to the compatibility to earlier firmware versions, a parameter value of zero in indices 1 to 31 is overwritten with the parameter value in index 0 when the Control Unit boots.

Note: Standstill is identified in the following cases:
- the speed actual value falls below the speed threshold in p1226 and the time started after this in p1228 has expired.
- the speed setpoint falls below the speed threshold in p1226 and the time started after this in p1227 has expired.

The actual value sensing is subject to measuring noise. For this reason, standstill cannot be detected if the speed threshold is too low.

p1227 Zero speed detection monitoring time / n_standst t_monit

SERVO_S110-DP, SERVO_S110-CAN, SERVO_S110-PN

Can be changed: U, T	**Calculated:** -	**Access level:** 2
Data type: FloatingPoint32	**Dyn. index:** -	**Func. diagram:** 2701, 2704
P-Group: Functions	**Unit group:** -	**Unit selection:** -
Not for motor type: -	**Scaling:** -	**Expert list:** 1
Min	**Max**	**Factory setting**
0.000 [s]	300.000 [s]	4.000 [s]

Description: Sets the monitoring time for the standstill identification.
When braking with OFF1 or OFF3, standstill is identified after this time has expired, after the setpoint speed has fallen below p1226 (also refer to p1145).
After this, the brake control is started, the system waits for the closing time in p1217 and then the pulses are suppressed.

Dependency: Refer to: p1215, p1216, p1217, p1226

Notice: For p1145 > 0.0 (RFG tracking) the setpoint is not equal to zero dependent on the selected value. This can therefore cause the monitoring time in p1227 to be exceeded. In this case, for a driven motor, the pulses are not suppressed.

Note: Standstill is identified in the following cases:
- the speed actual value falls below the speed threshold in p1226 and the time started after this in p1228 has expired.
- the speed setpoint falls below the speed threshold in p1226 and the time started after this in p1227 has expired.

For p1227 = 300.000 s the following applies:
Monitoring is de-activated.
For p1227 = 0.000 s, the following applies:
With OFF1 or OFF3 and a ramp-down time = 0, the pulses are immediately suppressed and the motor "coasts" down.

p1228 Pulse suppression delay time / Pulse suppr t_del

SERVO_S110-DP, SERVO_S110-CAN, SERVO_S110-PN

Can be changed: U, T	**Calculated:** -	**Access level:** 2
Data type: FloatingPoint32	**Dyn. index:** -	**Func. diagram:** 2701, 2704
P-Group: Functions	**Unit group:** -	**Unit selection:** -
Not for motor type: -	**Scaling:** -	**Expert list:** 1
Min	**Max**	**Factory setting**
0.000 [s]	299.000 [s]	0.000 [s]

Description: Sets the delay time for pulse suppression.
After OFF1 or OFF3 and zero speed detection, the system waits for this time to expire and the pulses are then suppressed.

Dependency: Refer to: p1226, p1227

Notice: If the motor holding brake is activated, the pulse suppression is only conducted if this delay time (p1228) and then the closing time for the brake (p1217) have elapsed.

Note: Standstill is identified in the following cases:
- the speed actual value falls below the speed threshold in p1226 and the time started after this in p1228 has expired.
- the speed setpoint falls below the speed threshold in p1226 and the time started after this in p1227 has expired.

r1229.1...11 CO/BO: Motor holding brake status word / Brake ZSW

SERVO_S110-DP (Ext brake), SERVO_S110-CAN (Ext brake), SERVO_S110-PN (Ext brake)

Can be changed: -	**Calculated:** -	**Access level:** 2
Data type: Unsigned32	**Dyn. index:** -	**Func. diagram:** -
P-Group: Functions	**Unit group:** -	**Unit selection:** -
Not for motor type: -	**Scaling:** -	**Expert list:** 1
Min	**Max**	**Factory setting**
-	-	-

Description: Displays the status word for the motor holding brake.

Bit field:

Bit	Signal name	1 signal	0 signal	FP
01	Command open brake (continuous signal)	Yes	No	2711
03	Pulse enable extended brake control	Yes	No	2711
04	Brake does not open	Yes	No	2711
05	Brake does not close	Yes	No	2711
06	Brake threshold exceeded	Yes	No	2707
07	Brake threshold undershot	Yes	No	2704
08	Brake monitoring time expired	Yes	No	2704
09	Pulse enable request missing/n_ctrl inhibited	Yes	No	2707
10	Brake OR logic operation result	Yes	No	2707
11	Brake AND logic operation result	Yes	No	2707

p1230[0...n] BI: Armature short-circuit / DC braking activation / ASC/DCBRK act

SERVO_S110-DP, SERVO_S110-CAN, SERVO_S110-PN

Can be changed: U, T	**Calculated:** -	**Access level:** 1
Data type: Unsigned32 / Binary	**Dyn. index:** CDS, p0170	**Func. diagram:** 7014, 7016, 7017
P-Group: Functions	**Unit group:** -	**Unit selection:** -
Not for motor type: -	**Scaling:** -	**Expert list:** 1
Min	**Max**	**Factory setting**
-	-	0

Description: Sets the signal source to activate the armature short-circuit or DC braking.

Dependency: Refer to: p1231, p1232, p1233, p1234, p1235, p1236, p1237, r1238, r1239, p1345, p1346

Note: 1 signal: Armature short-circuit/DC braking activated.
0 signal: Armature short-circuit/DC braking de-activated.

p1231[0...n] Armature short-circuit / DC braking configuration / ASC/DCBRK config

SERVO_S110-DP, SERVO_S110-CAN, SERVO_S110-PN

Can be changed: U, T	**Calculated:** -	**Access level:** 1
Data type: Integer16	**Dyn. index:** MDS, p0130	**Func. diagram:** 7014, 7016, 7017
P-Group: Functions	**Unit group:** -	**Unit selection:** -
Not for motor type: -	**Scaling:** -	**Expert list:** 1
Min	**Max**	**Factory setting**
0	14	0

Description: Setting to activate the various types for armature short-circuit / DC braking.

Value:
0: No function
1: External armature short-circuit with contactor feedback signal
2: Ext. armature short circuit without contactor feedback signal
4: DC braking
5: DC braking for OFF1/OFF3
14: DC braking below starting speed

Dependency: Refer to: p0300, p1230, p1232, p1233, p1234, p1235, p1236, p1237, r1238, r1239, p1345, p1346

Danger: Re p1231 = 1, 2:

- only short-circuit-proof motors may be used, or suitable resistors must be used to short-circuit the motor

Note: Re p1231 = 1, 2:

The external armature short circuit can only be selected for synchronous motors (p0300). In this case, control bit BO: r1239.0 must be interconnected (e.g. to a digital input) to control the external contactor.

The external armature short circuit cannot be set as a fault response. It can be triggered via binector input p1230. It is also always activated in the case of pulse suppression.

Re p1231 = 4:

The function is activated as soon as the activation criterion is fulfilled.

- the function can be superseded by OFF2

a) This function is not supported for synchronous motors (p0300 = 2xx, 4xx).

b) For induction motors (p0300 = 1xx), the DC braking is initiated.

Activation criterion (one of the following criteria is fulfilled):

- binector input p1230 = 1 signal (DC braking activation).
- the drive is not in the state "S4: Operation" or in S5x (refer to function diagram 2610).
- the internal pulse enable is missing (r0046.19 = 0).

Re p1231 = 5:

DC braking can only be set for induction motors.

DC braking is activated if the OFF1 or OFF3 command is present. Binector input p1230 is ineffective. If the drive speed still lies above the speed threshold p1234, then initially, the drive is ramped-down to this threshold, demagnetized (see p0347) and is then switched into DC braking for the time set in p1233. After this, the drive is switched-off. If, at OFF1/OFF3, the drive speed is below p1234, then it is immediately demagnetized and switched into DC braking. A change is made into normal operation if the OFF1 command is withdrawn prematurely.

DC braking by means of fault response continues to be possible.

Re p1231 = 14:

DC braking can only be set for induction motors.

DC braking is initiated if binector input p1230 = 1 during operation and the actual speed is below the starting speed p1234 (before this, the drive must have operated above p1234 plus the hysteresis). Then, following upstream de-magnetization (see p0347), the braking current p1232 is injected for the time set in p1233. The drive then changes into normal operation. During braking the command for DC braking can be withdrawn. If the time p1233 is exceeded, then DC braking is inhibited and the drive changes into normal operation.

For OFF1 and OFF3, DC braking is only executed, if binector input p1230 = 1 signal.

DC braking by means of fault response continues to be possible.

Re p1231 = 4, 5, 14:

The value can only be changed to values not equal to 4 or 14 if p0491 is not equal to 4 and p2101 is not equal to 6 (armature short circuit/DC braking not set).

Note:

ASC: Armature Short Circuit

DCBRK: DC Braking

p1232[0...n] DC braking braking current / DCBRK I_brake

SERVO_S110-DP, SERVO_S110-CAN, SERVO_S110-PN

Can be changed: U, T	**Calculated:** -	**Access level:** 1
Data type: FloatingPoint32	**Dyn. index:** MDS, p0130	**Func. diagram:** 7017
P-Group: Functions	**Unit group:** -	**Unit selection:** -
Not for motor type: PMSM, REL, FEM	**Scaling:** -	**Expert list:** 1
Min	**Max**	**Factory setting**
0.00 [Arms]	10000.00 [Arms]	0.00 [Arms]

Description: Sets the braking current for DC braking.

Dependency: Refer to: p1230, p1231, p1233, p1234, r1239, p1345, p1346

Note: A change to the braking current becomes effective the next time that DC braking is switched on.

The value for p1232 is specified as an rms value in the 3-phase system. The magnitude of the braking current is the same as that of an identical output current at frequency zero (see r0067, r0068, p0640). The braking current is internally limited to r0067.

p1233[0...n] DC braking time / DCBRK time

SERVO_S110-DP, SERVO_S110-CAN, SERVO_S110-PN

Can be changed: U, T	**Calculated:** -	**Access level:** 1
Data type: FloatingPoint32	**Dyn. index:** MDS, p0130	**Func. diagram:** 7017
P-Group: Functions	**Unit group:** -	**Unit selection:** -
Not for motor type: PMSM, REL, FEM	**Scaling:** -	**Expert list:** 1
Min	**Max**	**Factory setting**
0.0 [s]	3600.0 [s]	1.0 [s]

Description: Sets the DC braking time (as fault response).

Dependency: Refer to: p1230, p1231, p1232, p1234, r1239

Note: The time set is also effective when parameterizing DC braking as fault response.

If a speed encoder is being used, DC braking is ended as soon as the drive falls below the standstill threshold (p1226).

p1234[0...n] Speed at the start of DC braking / DCBRK n_start

SERVO_S110-DP, SERVO_S110-CAN, SERVO_S110-PN

Can be changed: U, T	**Calculated:** -	**Access level:** 1
Data type: FloatingPoint32	**Dyn. index:** MDS, p0130	**Func. diagram:** 7017
P-Group: Functions	**Unit group:** -	**Unit selection:** -
Not for motor type: PMSM, REL, FEM	**Scaling:** -	**Expert list:** 1
Min	**Max**	**Factory setting**
0.00 [rpm]	210000.00 [rpm]	210000.00 [rpm]

Description: Sets the starting speed for DC braking.

If the actual speed falls below this threshold, then DC braking is activated.

Dependency: Refer to: p1230, p1231, p1232, p1233, r1239

Caution: If an encoder fault occurs during closed-loop operation with an encoder, controlled deceleration of the drive down to the start speed p1234 is no longer possible. In this case, DC braking is activated immediately and injects the braking current p1232 for the braking time p1233 after de-magnetizing. The braking current and braking duration must, therefore, be dimensioned accordingly for this situation so that the drive can be decelerated to standstill.

In the case of operation with an encoder, this speed may not be set too low so as ensure that the oscillation movement induced by the residual flux/remanence of the motor does not cause DC braking to be de-activated again.

p1235[0...n] BI: External armature short-circuit contactor feedback signal / ASC ext feedback

SERVO_S110-DP, SERVO_S110-CAN, SERVO_S110-PN

Can be changed: T	**Calculated:** -	**Access level:** 1
Data type: Unsigned32 / Binary	**Dyn. index:** CDS, p0170	**Func. diagram:** -
P-Group: Functions	**Unit group:** -	**Unit selection:** -
Not for motor type: -	**Scaling:** -	**Expert list:** 1
Min	**Max**	**Factory setting**
-	-	0

Description: Sets the signal source for the contactor feedback signal for external armature short-circuit.

Dependency: Refer to: p1230, p1231, p1236, p1237, r1239

Notice: In order that the pulses are not enabled when the contactor is closed, the contactor feedback signal must lag by a sufficiently long time when opening the contactor.

Note: 1 signal: The contactor is closed.

0 signal: The contactor is open.

p1236[0...n] Ext. armature short-cct. contactor feedback signal monit. time / ASC ext t_monit

SERVO_S110-DP, SERVO_S110-CAN, SERVO_S110-PN

Can be changed: U, T	**Calculated:** -	**Access level:** 1
Data type: FloatingPoint32	**Dyn. index:** MDS, p0130	**Func. diagram:** -
P-Group: Functions	**Unit group:** -	**Unit selection:** -
Not for motor type: -	**Scaling:** -	**Expert list:** 1
Min	**Max**	**Factory setting**
0 [ms]	1000 [ms]	200 [ms]

Description: Sets the monitoring time of the contactor feedback signal for the external armature short-circuit configuration.

If the contactor feedback signal (p1235) is parameterized, then the appropriate feedback signal (r1239.1) is expected within this monitoring time after either opening or closing the contactor.

Dependency: Refer to: p1230, p1231, p1235, p1237, r1239
Refer to: A07904, F07905

p1237[0...n] External armature short-circuit delay time when opening / ASC ext t_wait

SERVO_S110-DP, SERVO_S110-CAN, SERVO_S110-PN

Can be changed: U, T	**Calculated:** -	**Access level:** 1
Data type: FloatingPoint32	**Dyn. index:** MDS, p0130	**Func. diagram:** -
P-Group: Functions	**Unit group:** -	**Unit selection:** -
Not for motor type: -	**Scaling:** -	**Expert list:** 1
Min	**Max**	**Factory setting**
0 [ms]	1000 [ms]	200 [ms]

Description: Sets the delay time when opening the contactor of the external armature short-circuit.
If no contactor feedback signal has been selected (p1235), then the system waits for this time before the pulses are switched in.

Dependency: Refer to: p1230, p1231, p1235, p1236, r1239

Notice: This delay time must be at least long enough so that the contactor contacts reliably open before the pulses are switched in. The delay time must be greater than the contactor response time. The Motor Module can be damaged if the delay time is too short.

r1238 CO: Armature short-circuit external state / EASC state

SERVO_S110-DP, SERVO_S110-CAN, SERVO_S110-PN

Can be changed: -	**Calculated:** -	**Access level:** 1
Data type: Integer16	**Dyn. index:** -	**Func. diagram:** 2610
P-Group: Functions	**Unit group:** -	**Unit selection:** -
Not for motor type: ASM	**Scaling:** -	**Expert list:** 1
Min	**Max**	**Factory setting**
0	6	-

Description: Displays the state for the external armature short-circuit.

Value:
0: Switched off
1: Ready
2: Active
3: Active - feedback signal "Closed" OK
4: Active - feedback signal "Closed" missing
5: Prompt to remove the armature short-circuit
6: Active - feedback signal "Open" missing

Dependency: Refer to: p1230, p1231, p1235, p1236, p1237, r1239
Refer to: A07904, F07905

Note: Activation criterion (one of the following criteria is fulfilled):
- the signal at BI: p1230 (armature short-circuit activation) is 0.
- the drive is not in the state "S4: Operation" or in S5x (refer to function diagram 2610).
- the internal pulse enable is missing (r0046.19 = 0).

Re state "switched out" (r1238 = 0):
- the external armature short-circuit can be selected with p1231 = 1.

Re state "ready" (r1238 = 1):
- as soon as the activation criterion is fulfilled, then a transition is made into the state "active" (r1238 = 2).

Regarding the state "active" (r1238 = 2), "active - feedback signal "Closed" OK" (r1238 = 3)", "active - feedback signal "Closed" missing" (r1238 = 4)":
- the control signal to close contactor r1239.0 is set to "1" (closed) and the pulses are suppressed.
- if a contactor feedback signal is not connected (BI: p1235 = 0 signal), then a transition is immediately made into state 3.
- if a contactor feedback signal is connected, then a transition is made into state 3 if the feedback signal at BI: p1235 goes to "1" (closed) within the monitoring time (p1236).
- otherwise, a transition is made into state 4.

Re state "prompt to remove the armature short-circuit" (r1238 = 5):

- the activation criterion is no longer fulfilled. An attempt is made to again remove the armature short circuit.
- the control signal to close the contactor r1239.0 is set to "0" (open) and the pulses remain suppressed.
- if a contactor feedback signal is not connected (BI: p1235 = 0 signal), the system waits for the delay time (p1237) to expire until a transition is made into state 1.
- if a contactor feedback signal is connected, the system waits until the feedback signal at BI:p1235 goes to "0" (open) until a transition is made into state 1. If this does not occur within the monitoring time (p1236), then a transition is made into state 6.

Re state "active - feedback signal "Open" missing" (r1238 = 6):

- this error state can be exited by de-selecting the external armature short-circuit (p1231 = 0).

r1239.0...13 CO/BO: Armature short-circuit / DC braking status word / ASC/DCBRK ZSW

SERVO_S110-DP, SERVO_S110-CAN, SERVO_S110-PN

Can be changed: -	**Calculated:** -	**Access level:** 1
Data type: Unsigned32	**Dyn. index:** -	**Func. diagram:** -
P-Group: Functions	**Unit group:** -	**Unit selection:** -
Not for motor type: -	**Scaling:** -	**Expert list:** 1
Min	**Max**	**Factory setting**
-	-	-

Description: Displays the status word for armature short-circuit.

Bit field:

Bit	Signal name	1 signal	0 signal	FP
00	External armature short-circuit	Active	Inactive	-
01	External armature short-circuit contactor feedback signal	Closed	Open	-
02	External armature short-circuit ready	Yes	No	-
03	External armature short-circuit with contactor feedback signal	Yes	No	-
04	Internal armature short-circuit	Active	Inactive	-
05	Internal armature short circuit feedback signal from power unit	Active	Inactive	-
06	Internal armature short-circuit ready	Yes	No	-
08	DC braking active	Yes	No	7017
10	DC braking ready	Yes	No	7017
11	Armature short circuit/DC braking selected	Yes	No	-
12	DC braking selection internally inhibited	Yes	No	-
13	DC braking for OFF1/OFF3	Yes	No	-

Dependency: Refer to: p1230, p1231, p1232, p1233, p1234, p1235, p1236, p1237

Note: External armature short-circuit (bits 0 ... 3):

Re bit 00:

Using this signal, the motor is short-circuited through an external contactor circuit. This means that this BO: p1239.0 must be interconnected e.g. to a digital output.

Re bit 01:

This signal indicates the state of the contactor to establish the armature short-circuit. To do this, BI: p1235 must be interconnected to a digital input.

Re bit 02:

The external armature short-circuit configuration is ready and is activated as soon as the activation criterion is fulfilled.

Re bit 03:

1: A feedback signal from an external contactor was parameterized in BI: p1235.

Internal voltage protection / internal armature short-circuit (bits 4 ... 6):

Re bit 04:

a) Internal voltage protection (p1231 = 3) was selected and the Motor Module does not support the autonomous internal voltage protection (r0192.10 = 0).

The Control Unit issues the command to the Motor Module to short-circuit the motor through the power semiconductors.

a) Internal voltage protection (p1231 = 3) was selected and the Motor Module supports the autonomous internal voltage protection (r0192.10 = 1).

The Motor Module decides autonomously whether the armature short-circuit is activated. In this case, the following applies: r1239.4 = r1239.5.

c) Internal armature short-circuit (p1231 = 4) was selected.

The Control Unit issues the command to the Motor Module to short-circuit the motor through the power semiconductors.

Re bit 05:

The Motor Module signals that the motor is short-circuited in the Motor Module through the power semiconductors.

Re bit 06:

a) Internal voltage protection (p1231 = 3) was selected and the Motor Module does not support the autonomous internal voltage protection (r0192.10 = 0).

The internal voltage protection is ready and is activated as soon as the activation criterion is fulfilled.

a) Internal voltage protection (p1231 = 3) was selected and the Motor Module supports the autonomous internal voltage protection (r0192.10 = 1).

The internal voltage protection is ready and the Motor Module decides autonomously - using the DC link voltage - whether the short-circuit is activated. In this case, protection is also provided even if the DRIVE-CLiQ connection between the Control Unit and Motor Module was interrupted. The short-circuit is activated if the DC link voltage exceeds 800 V. If the DC link voltage falls below 450 V, then the short-circuit is withdrawn.

c) Internal armature short-circuit (p1231 = 4) was selected.

The internal armature short-circuit is ready and is activated as soon as the activation criterion is fulfilled.

Activation criterion (one of the following criteria is fulfilled):

- the signal at BI: p1230 (armature short-circuit activation) is 1.
- the drive is not in the state "S4: Operation" or in S5x (refer to function diagram 2610).
- the internal pulse enable is missing (r0046.19 = 0).

Re bit 12, 13:

Only effective for p1231 = 14.

p1240[0...n] Vdc controller or Vdc monitoring configuration / Vdc_ctrl config

SERVO_S110-DP, SERVO_S110-CAN, SERVO_S110-PN

Can be changed: U, T	**Calculated:** -	**Access level:** 3
Data type: Integer16	**Dyn. index:** DDS, p0180	**Func. diagram:** 3082, 5650
P-Group: Functions	**Unit group:** -	**Unit selection:** -
Not for motor type: REL	**Scaling:** -	**Expert list:** 1
Min	**Max**	**Factory setting**
0	9	0

Description: Sets the configuration of the controller or monitoring for the DC link voltage (Vdc).

Value:

0: Inhib Vdc ctrl
1: Enable Vdc_max controller
2: Enable Vdc_min controller (kinetic buffering)
3: Enable Vdc_min controller and Vdc_max controller
4: Activate Vdc_max monitoring
5: Activate Vdc_min monitoring
6: Activate Vdc_min monitoring and Vdc_max monitoring
7: Enable Vdc_max controller without accelerating
8: Enable Vdc_min controller without braking
9: Enable Vdc_min and Vdc_max controller w/o braking/accelerating

Dependency: Refer to: p1244, p1248, p1250, p1532

Notice: During a few steps of the rotating measurement (p1960 = 1) the Vdc_min controller and/or Vdc_max controller is disabled.

Note: p1240 = 1, 3:

When the upper DC link voltage threshold is reached (p1244), then the following applies:

- the Vdc_max controller limits the regenerative energy in order that the DC link voltage is kept below the maximum DC link voltage when braking.
- when other drives regenerate into the DC link, then the Vdc_max controller causes the motor to accelerate.

p1240 = 2, 3:

When the lower DC link voltage threshold is reached (p1248), the following applies:

- the Vdc_min controller limits the energy taken from the DC link in order to keep the DC link voltage above the minimum DC link voltage when accelerating.
- the motor is braked in order to use its kinetic energy to buffer the DC link.

p1240 = 4, 5, 6:

When the threshold in p1244 or p1248 is reached, the DC link voltage monitoring initiates a fault with a response and therefore reduces additional negative effects on the DC link voltage.

p1240 = 7, 9:
As for p1240 = 1, 3. However, the motor is prevented from accelerating due to the fact that other drives are regenerating. The effective lower torque limit cannot exceed the offset of the torque limit (p1532).
p1240 = 8, 9:
As for p1240 = 2, 3. However, the motor is prevented from braking due to the fact that the DC link voltage has been lowered. The effective upper torque limit cannot be less than the offset of the torque limit (p1532).

p1244[0...n] DC link voltage threshold upper / Vdc upper thresh

SERVO_S110-DP, SERVO_S110-CAN, SERVO_S110-PN

Can be changed: U, T	**Calculated:** CALC_MOD_CON	**Access level:** 3
Data type: FloatingPoint32	**Dyn. index:** DDS, p0180	**Func. diagram:** 5650
P-Group: Functions	**Unit group:** -	**Unit selection:** -
Not for motor type: REL	**Scaling:** -	**Expert list:** 1
Min	**Max**	**Factory setting**
165 [V]	1200 [V]	750 [V]

Description: Sets the upper threshold for the DC link voltage.
For p1240 = 1, 3, 7, 9, this threshold is used as limit setpoint for the Vdc_max controller.
For p1240 = 4, 6, for DC link voltages above this threshold, an appropriate fault is output.

Dependency: Refer to: p1240, p1248, p1250

Note: For p1244 < 1.07 * "parameterized DC link voltage" input of values is rejected.
For p0204.0 = 1, the following applies:
"Parameterized DC link voltage" = p0210
For p0204.0 = 0, the following applies:
"Parameterized DC link voltage" = p0210 * 1.4142

p1248[0...n] DC link voltage threshold lower / Vdc lower thresh

SERVO_S110-DP, SERVO_S110-CAN, SERVO_S110-PN

Can be changed: U, T	**Calculated:** CALC_MOD_CON	**Access level:** 3
Data type: FloatingPoint32	**Dyn. index:** DDS, p0180	**Func. diagram:** 5650
P-Group: Functions	**Unit group:** -	**Unit selection:** -
Not for motor type: REL	**Scaling:** -	**Expert list:** 1
Min	**Max**	**Factory setting**
100 [V]	1000 [V]	450 [V]

Description: Sets the lower threshold for the DC link voltage.
For p1240 = 2, 3, 8, 9, this threshold is used as limit setpoint for the Vdc_min controller.
For p1240 = 5, 6, for DC link voltages below this threshold, an appropriate fault is output.

Dependency: Refer to: p1240, p1244, p1250

Note: For p1248 > 0.93 * "parameterized DC link voltage" input of values is rejected.
For p0204.0 = 1, the following applies:
"Parameterized DC link voltage" = p0210
For p0204.0 = 0, the following applies:
"Parameterized DC link voltage" = p0210 * 1.4142

p1250[0...n] Vdc controller proportional gain / Vdc_ctrl Kp

SERVO_S110-DP, SERVO_S110-CAN, SERVO_S110-PN

Can be changed: U, T	**Calculated:** CALC_MOD_CON	**Access level:** 3
Data type: FloatingPoint32	**Dyn. index:** DDS, p0180	**Func. diagram:** 5650
P-Group: Functions	**Unit group:** 19_1	**Unit selection:** p0505
Not for motor type: REL	**Scaling:** -	**Expert list:** 1
Min	**Max**	**Factory setting**
0.00 [A/V]	10.00 [A/V]	1.00 [A/V]

Description: Sets the proportional gain for the DC-link voltage controller (Vdc_min controller, Vdc_max controller).

Dependency: Refer to: p1240, p1244, p1248

p1275 Motor holding brake control word / Brake STW

SERVO_S110-DP (Ext brake), SERVO_S110-CAN (Ext brake), SERVO_S110-PN (Ext brake)

Can be changed: U, T	**Calculated:** -	**Access level:** 2
Data type: Unsigned32	**Dyn. index:** -	**Func. diagram:** -
P-Group: Functions	**Unit group:** -	**Unit selection:** -
Not for motor type: -	**Scaling:** -	**Expert list:** 1
Min	**Max**	**Factory setting**
-	-	0000 0000 bin

Description: Sets the control word for the motor holding brake.

Bit field:

Bit	Signal name	1 signal	0 signal	FP
00	Inversion BI: 1219[0]	Yes	No	2707
01	Inversion BI: 1219[1]	Yes	No	2707
02	Inversion BI: 1224[0]	Yes	No	2704
03	Inversion BI: 1224[1]	Yes	No	2704
05	Brake with feedback	Yes	No	2711

p1276 Motor holding brake standstill detection bypass / Brk standst bypass

SERVO_S110-DP (Ext brake), SERVO_S110-CAN (Ext brake), SERVO_S110-PN (Ext brake)

Can be changed: U, T	**Calculated:** -	**Access level:** 2
Data type: FloatingPoint32	**Dyn. index:** -	**Func. diagram:** 2704
P-Group: Functions	**Unit group:** -	**Unit selection:** -
Not for motor type: -	**Scaling:** -	**Expert list:** 1
Min	**Max**	**Factory setting**
0.000 [s]	300.000 [s]	300.000 [s]

Description: Sets the delay time for closing the brake at standstill.

After this time has expired, if the "close brake at standstill" or OFF1/OFF3 is present, the brake is closed and the pulses are suppressed.

For p1276 = 300.000 s, the timer is de-activated - this means that the timer output is always zero.

p1277 Motor holding brake braking threshold delay exceeded / Del thresh exceed

SERVO_S110-DP (Ext brake), SERVO_S110-CAN (Ext brake), SERVO_S110-PN (Ext brake)

Can be changed: U, T	**Calculated:** -	**Access level:** 2
Data type: FloatingPoint32	**Dyn. index:** -	**Func. diagram:** 2707
P-Group: Functions	**Unit group:** -	**Unit selection:** -
Not for motor type: -	**Scaling:** -	**Expert list:** 1
Min	**Max**	**Factory setting**
0.000 [s]	300.000 [s]	0.000 [s]

Description: Sets the delay time for the signal "braking threshold exceeded" (BO: r1229.6).

Dependency: Refer to: p1220, p1221, r1229

p1278 Brake control diagnostics evaluation / Brake diagnostics

SERVO_S110-DP, SERVO_S110-CAN, SERVO_S110-PN

Can be changed: U, T	**Calculated:** -	**Access level:** 2
Data type: Integer16	**Dyn. index:** -	**Func. diagram:** -
P-Group: Functions	**Unit group:** -	**Unit selection:** -
Not for motor type: -	**Scaling:** -	**Expert list:** 1
Min	**Max**	**Factory setting**
0	1	0

Description: Sets the brake control type (with or without diagnostics evaluation).

Example for brake control with diagnostics evaluation.

- brake control in the Motor Modules in booksize format
- Safe Brake Relay for AC Drive

Example for brake control without diagnostics evaluation.

- Brake Relay for AC Drive

Value:

0: Brake control with diagnostics evaluation
1: Brake control without diagnostics evaluation

Note: If the configuration of the motor holding brake (p1215) is set to "no holding brake present" when booting, then an automatic identification of the motor holding brake will be carried out. If a brake control is detected without diagnostics evaluation (e.g. Brake Relay for AC Drive), then the parameter is set to "brake control without diagnostics evaluation".

It is not permissible to parameterize "brake control without diagnostics evaluation" and also enable "safe brake control" (p1278 = 1, p9602 = 1, p9802 = 1).

p1279[0...3] BI: Motor holding brake OR/AND logic operation / Brake OR AND

SERVO_S110-DP (Ext brake), SERVO_S110-CAN (Ext brake), SERVO_S110-PN (Ext brake)

Can be changed: T	**Calculated:** -	**Access level:** 2
Data type: Unsigned32 / Binary	**Dyn. index:** -	**Func. diagram:** 2707
P-Group: Functions	**Unit group:** -	**Unit selection:** -
Not for motor type: -	**Scaling:** -	**Expert list:** 1
Min	**Max**	**Factory setting**
-	-	0

Description: Sets the signal source for the OR/AND logic operation.

Dependency: Refer to: r1229

Note: [0]: OR logic operation, input 1 --> the result is displayed in r1229.10.

[1]: OR logic operation, input 2 --> the result is displayed in r1229.10.

[2]: AND logic operation, input 1 --> the result is displayed in r1229.11.

[3]: AND logic operation, input 2 --> the result is displayed in r1229.11.

p1300[0...n] Open-loop/closed-loop control operating mode / Op/cl-lp ctrl_mode

SERVO_S110-DP, SERVO_S110-CAN, SERVO_S110-PN

Can be changed: C2(1), T	**Calculated:** -	**Access level:** 2
Data type: Integer16	**Dyn. index:** DDS, p0180	**Func. diagram:** 1590, 1690, 5060, 6300
P-Group: U/f open-loop control	**Unit group:** -	**Unit selection:** -
Not for motor type: -	**Scaling:** -	**Expert list:** 1
Min	**Max**	**Factory setting**
20	23	21

Description: Sets the open and closed-loop control mode of a drive.

Value:
20: Speed control (encoderless)
21: Speed control (with encoder)
23: Torque control (with encoder)

Dependency: Closed-loop speed or torque control (with encoder) cannot be selected if the encoder type is not entered (p0400).

Refer to: p0108, r0108, p0300, p0311, p0400, p1501

Notice: General conditions for encoderless operation can be found in the following literature:

SINAMICS S120 Function Manual Drive Functions

Note: The closed-loop torque control can only be changed over in operation (p1300 = 20, 21) by selecting the closed-loop speed control (p1501). At the changeover, the setting of p1300 does not change. In this case, the actual state is displayed in r1407, bit 2 and bit 3.

For encoderless operation (p1404 = 0 or p1300 = 20), the following applies:

- The following condition must be fulfilled: p1800 >= n / (2 * p0115[0]), n = 1, 2, ...
- For motors with a small power rating (< 300 W) we recommend to set n >= 2.

p1317[0...n] U/f control activation / Uf act

SERVO_S110-DP, SERVO_S110-CAN, SERVO_S110-PN

Can be changed: T	**Calculated:** -	**Access level:** 3
Data type: Integer16	**Dyn. index:** DDS, p0180	**Func. diagram:** 1590, 5730
P-Group: -	**Unit group:** -	**Unit selection:** -
Not for motor type: -	**Scaling:** -	**Expert list:** 1
Min	**Max**	**Factory setting**
0	1	0

Description: Setting to activate the U/f control with linear characteristic.

Value:
0: De-activated (p1300 effective)
1: Activated

Dependency: Refer to: p1318, p1319, p1326, p1327

Note: The following applies for firmware version 4.3 and higher:
When U/f control is activated, resonance damping is automatically activated. The resonance damping must be de-activated (p1338 = 0) in order to obtain pure diagnostics operation without the influence of actual values.
Further, when U/f control is activated, the following functions are active:
- Vdc controller (p1240, p1244, p1248, p1250).
- the up ramp is limited by the set M, P and I limits (p0326, p0341, p0342, p0640, p1520, p1521, p1530, p1531, p1498).
- the ramp-function generator is held if the current actual value exceeds the current limit set in p0640.

p1318[0...n] U/f control ramp-up/ramp-down time / Uf t_rmp-up_rmp-dn

SERVO_S110-DP, SERVO_S110-CAN, SERVO_S110-PN

Can be changed: U, T	**Calculated:** -	**Access level:** 3
Data type: FloatingPoint32	**Dyn. index:** DDS, p0180	**Func. diagram:** 5300
P-Group: U/f open-loop control	**Unit group:** -	**Unit selection:** -
Not for motor type: -	**Scaling:** -	**Expert list:** 1
Min	**Max**	**Factory setting**
0.000 [s]	999999.000 [s]	10.000 [s]

Description: Sets the ramp-up and ramp-down time for the U/f control.
The ramp-function generator requires this time to reach the maximum speed (p1082) from zero.
Dependency: Refer to: p1317, p1319, p1326, p1327
Note: This ramp is used for stall protection and operates independently of any ramp-function generator that might have been configured.

p1319[0...n] U/f control voltage at zero frequency / Uf U at f=0 Hz

SERVO_S110-DP, SERVO_S110-CAN, SERVO_S110-PN

Can be changed: U, T	**Calculated:** CALC_MOD_REG	**Access level:** 3
Data type: FloatingPoint32	**Dyn. index:** DDS, p0180	**Func. diagram:** 5300
P-Group: U/f open-loop control	**Unit group:** -	**Unit selection:** -
Not for motor type: -	**Scaling:** -	**Expert list:** 1
Min	**Max**	**Factory setting**
0.0 [Vrms]	50.0 [Vrms]	0.0 [Vrms]

Description: The linear characteristic for the U/f control is defined by 0 Hz / p1319 and p1326 / p1327.
This parameter specifies the voltage for a frequency of 0 Hz.
Dependency: The U/f control is activated via p1317 = 1.
Refer to: p1317, p1326, p1327
Note: Linear interpolation is carried out between the points 0 Hz/p1319 and p1326/p1327.

p1326[0...n] U/f control characteristic frequency / Uf char f4

SERVO_S110-DP, SERVO_S110-CAN, SERVO_S110-PN

Can be changed: U, T	**Calculated:** CALC_MOD_REG	**Access level:** 3
Data type: FloatingPoint32	**Dyn. index:** DDS, p0180	**Func. diagram:** 5300
P-Group: U/f open-loop control	**Unit group:** -	**Unit selection:** -
Not for motor type: -	**Scaling:** -	**Expert list:** 1
Min	**Max**	**Factory setting**
0.00 [Hz]	10000.00 [Hz]	0.00 [Hz]

Description: The linear characteristic for the U/f control is defined by 0 Hz / p1319 and p1326 / p1327.
This parameter specifies the frequency of the fourth point along the characteristic.
Dependency: The U/f control is activated via p1317 = 1.
Refer to: p1317, p1319, p1327
Note: Linear interpolation is carried out between the points 0 Hz/p1319 and p1326/p1327.

p1327[0...n] U/f control characteristic voltage / Uf char U4

SERVO_S110-DP, SERVO_S110-CAN, SERVO_S110-PN

Can be changed: U, T	**Calculated:** CALC_MOD_REG	**Access level:** 3
Data type: FloatingPoint32	**Dyn. index:** DDS, p0180	**Func. diagram:** 5300
P-Group: U/f open-loop control	**Unit group:** -	**Unit selection:** -
Not for motor type: -	**Scaling:** -	**Expert list:** 1
Min	**Max**	**Factory setting**
0.0 [Vrms]	10000.0 [Vrms]	0.0 [Vrms]

Description: The linear characteristic for the U/f control is defined by 0 Hz / p1319 and p1326 / p1327.
This parameter specifies the voltage of the fourth point along the characteristic.

Dependency: The U/f control is activated via p1317 = 1.
Refer to: p1317, p1319, p1326

Note: Linear interpolation is carried out between the points 0 Hz/p1319 and p1326/p1327.

p1338[0...n] U/f mode resonance damping gain / Uf Res_damp gain

SERVO_S110-DP, SERVO_S110-CAN, SERVO_S110-PN

Can be changed: U, T	**Calculated:** CALC_MOD_CON	**Access level:** 3
Data type: FloatingPoint32	**Dyn. index:** DDS, p0180	**Func. diagram:** -
P-Group: U/f open-loop control	**Unit group:** -	**Unit selection:** -
Not for motor type: -	**Scaling:** -	**Expert list:** 1
Min	**Max**	**Factory setting**
0.00	100.00	1.00

Description: Sets the gain for resonance damping for U/f control.
In U/f mode, the resonance damping function dampens oscillations that are frequently experienced by induction motors in certain speed ranges and by synchronous motors above even low speeds.

Dependency: Refer to: p1317, p1339, p1349

Note: Resonance damping is active in the following ranges:
- Active: 3.1 Hz ... p1349
- Build-up (linear): 3.1 ... 4.77 Hz
- Reduction (linear): 0.95 * p1349 ... p1349

Where the value = 1 and at the oscillation amplitude of the rated current, the rated slip frequency is switched in for induction motors, while a frequency of 10 Hz is switched in for synchronous motors.

p1339[0...n] U/f mode resonance damping filter time constant / Uf Res_damp T

SERVO_S110-DP, SERVO_S110-CAN, SERVO_S110-PN

Can be changed: U, T	**Calculated:** CALC_MOD_CON	**Access level:** 3
Data type: FloatingPoint32	**Dyn. index:** DDS, p0180	**Func. diagram:** 5300
P-Group: U/f open-loop control	**Unit group:** -	**Unit selection:** -
Not for motor type: -	**Scaling:** -	**Expert list:** 1
Min	**Max**	**Factory setting**
1.00 [ms]	1000.00 [ms]	20.00 [ms]

Description: Sets the filter time constant for resonance damping for U/f control.

Dependency: Refer to: p1317, p1338, p1349

Note: The filter time constant must be greater than the oscillation period of the oscillation to be dampened.

p1345[0...n] DC braking proportional gain / DCBRK Kp

SERVO_S110-DP, SERVO_S110-CAN, SERVO_S110-PN

Can be changed: U, T	**Calculated:** CALC_MOD_CON	**Access level:** 3
Data type: FloatingPoint32	**Dyn. index:** DDS, p0180	**Func. diagram:** -
P-Group: U/f open-loop control	**Unit group:** -	**Unit selection:** -
Not for motor type: -	**Scaling:** -	**Expert list:** 1
Min	**Max**	**Factory setting**
0.000	100000.000	0.000

Description: Sets the proportional gain for DC braking (p1230, p1231).

Dependency: Refer to: p1346

Note: Current controller adaptation is not effective for DC braking.

p1346[0...n] DC braking integral time / DCBRK Tn

SERVO_S110-DP, SERVO_S110-CAN, SERVO_S110-PN

Can be changed: U, T	**Calculated:** CALC_MOD_CON	**Access level:** 3
Data type: FloatingPoint32	**Dyn. index:** DDS, p0180	**Func. diagram:** -
P-Group: U/f open-loop control	**Unit group:** -	**Unit selection:** -
Not for motor type: -	**Scaling:** -	**Expert list:** 1
Min	**Max**	**Factory setting**
0.000 [ms]	50.000 [ms]	0.030 [ms]

Description: Sets the integral time for DC braking (p1230, p1231).

Dependency: Refer to: p1345

Note: For p1346 = 0, the following applies:
The integral time of DC braking is de-activated.

p1349[0...n] U/f mode resonance damping maximum frequency / Uf res_damp f_max

SERVO_S110-DP, SERVO_S110-CAN, SERVO_S110-PN

Can be changed: U, T	**Calculated:** CALC_MOD_ALL	**Access level:** 3
Data type: FloatingPoint32	**Dyn. index:** DDS, p0180	**Func. diagram:** -
P-Group: U/f open-loop control	**Unit group:** -	**Unit selection:** -
Not for motor type: -	**Scaling:** -	**Expert list:** 1
Min	**Max**	**Factory setting**
0.00 [Hz]	3000.00 [Hz]	3000.00 [Hz]

Description: Sets the maximum output frequency for resonance damping for U/f control.
Resonance damping is inactive above this output frequency.

Dependency: Refer to: p1338, p1339

Note: Resonance damping is active in the following ranges:
- Active: 3.1 Hz ... p1349
- Build-up (linear): 3.1 ... 4.77 Hz
- Reduction (linear): 0.95 * p1349 ... p1349

p1400[0...n] Speed control configuration / n_ctrl config

SERVO_S110-DP, SERVO_S110-CAN, SERVO_S110-PN

Can be changed: U, T	**Calculated:** -	**Access level:** 2
Data type: Unsigned32	**Dyn. index:** DDS, p0180	**Func. diagram:** 1590, 5490
P-Group: Closed-loop control	**Unit group:** -	**Unit selection:** -
Not for motor type: REL	**Scaling:** -	**Expert list:** 1
Min	**Max**	**Factory setting**
-	-	0000 0000 0000 0000 0000 0011 1010 0000 bin

Description: Sets the configuration for the closed-loop speed control.

Bit field:

Bit	Signal name	1 signal	0 signal	FP
03	Reference model speed setpoint I component	ON	OFF	5030
04	Torque limiting active in motoring/regenerative mode	Yes	No	-
05	Kp/Tn adaptation active	Yes	No	-
07	Interpolation speed pre-control active	Yes	No	-
08	Interpolation torque setpoint active	Yes	No	-
09	Damping for encoderless open-loop controlled oper.	Yes	No	-
10	Speed precontrol	For balancing	For setp_filter 2	-
11	Encoderless oper. speed actual value starting value	setpoint	0.0	-
12	Encoderless operation changeover	Steady-state	When accelerating	-
13	Motoring/regenerative depending on	Speed setpoint	Speed actual value	-
16	I component for limiting	Enable	Hold	-
18	Moment of inertia estimator active	Yes	No	-

Note: Re bit 07:

The interpolator is only effective for clock-cycle synchronous PROFIBUS operation and when the master receives a sign-of-life (STW 2.12 ... STW 2.15). Further, for active Dynamic Servo Control (DSC) an additional dead time of one speed controller clock cycle is obtained.

Re bit 10:

The pre-control signal via connector input p1430 only becomes effective at p1402.4 = 1 (torque-speed pre-control with encoder) at p1400.10 = 0 (for setp_filter 2).

Re bit 11:

If the motor rotates when the pulses are enabled, then we recommend p1400.11 = 1 (starting value = setpoint) with the matching sign.

If the motor remains stationary (zero speed) when the pulses are enabled, the we recommend p1400.11 = 0 (starting value = 0.0).

Re bit 12:

If a changeover is made from operation with encoder to encoderless operation while accelerating (with the threshold from p1404), then we recommend p1400.12 = 0.

If the changeover is made from operation with encoder to encoderless at constant speed/velocity (e.g. with a DDS changeover or if there is an encoder fault via p0491) then we recommend p1400.12 = 1.

Re bit 18:

Only active when the "moment of inertia estimator" function module is active (r0108.10 = 1).

For operation with encoder, in addition, p1402.4 must be set to 1.

The result of the moment of inertia estimator is displayed in r1493 when the function is activated.

The function assumes that speed changes are made without load. If a speed change must be realized under load, then during this time, the estimated moment of inertia should be frozen using binector input p1502.

p1402[0...n] Closed-loop current control and motor model configuration / I_ctrl config

SERVO_S110-DP, SERVO_S110-CAN, SERVO_S110-PN

Can be changed: T	**Calculated:** -	**Access level:** 3
Data type: Unsigned16	**Dyn. index:** DDS, p0180	**Func. diagram:** -
P-Group: Closed-loop control	**Unit group:** -	**Unit selection:** -
Not for motor type: -	**Scaling:** -	**Expert list:** 1
Min	**Max**	**Factory setting**
-	-	0000 0100 bin

Description: Sets the configuration for the closed-loop control and the motor model.

Bit field:

Bit	Signal name	1 signal	0 signal	FP
01	Park encoder for n_act > p1404	Yes	No	-
02	Current controller adaptation active	Yes	No	-
04	Torque-speed pre-control with encoder	Yes	No	-

Note: Re bit 01:

When the bit is set, the encoder is parked as soon as the actual speed is greater than the changeover speed (p1404). The encoder state is indicated in r0481.14.

Re bit 02:

The current controller adaptation (p0391 ... p0393) is only calculated when the bit is set.

p1404[0...n] Encoderless operation changeover speed / Encoderl op n_chg

SERVO_S110-DP, SERVO_S110-CAN, SERVO_S110-PN

Can be changed: T	**Calculated:** -	**Access level:** 3
Data type: FloatingPoint32	**Dyn. index:** DDS, p0180	**Func. diagram:** 1590, 5060
P-Group: Closed-loop control	**Unit group:** 3_1	**Unit selection:** p0505
Not for motor type: -	**Scaling:** -	**Expert list:** 1
Min	**Max**	**Factory setting**
0.00 [rpm]	210000.00 [rpm]	210000.00 [rpm]

Description: Sets the speed to change over between operation with and without an encoder.

Above this speed, the drive system is automatically operated in encoderless mode.

Notice: General conditions for encoderless operation can be found in the following literature:

SINAMICS S120 Function Manual Drive Functions

Note: The changeover speed applies when changing over between operation with and without encoder.
With p1404 > 0, the effective changeover speed is limited to values greater than or equal to p1755 in order to avoid controlled operation.
Separate speed controllers should be set when operating with and without encoder.
- Operation with encoder: p1460 (Kp), p1462 (Tn), p1461, p1463, p1457, p1458 (speed controller adaptation)
- Operation without encoder: p1470 (Kp), p1472 (Tn)
For encoderless operation (p1404 = 0 or p1300 = 20), the following applies:
- The condition must be fulfilled: p1800 >= n / (2 * p0115[0]), n = 1, 2, ...
- For motors with a small power rating (< 300 W) we recommend to set n >= 2.

r1406.8...12 CO/BO: Control word speed controller / STW n_ctrl

SERVO_S110-DP, SERVO_S110-CAN, SERVO_S110-PN

Can be changed: -	**Calculated:** -	**Access level:** 3
Data type: Unsigned16	**Dyn. index:** -	**Func. diagram:** 1530, 2520
P-Group: Closed-loop control	**Unit group:** -	**Unit selection:** -
Not for motor type: REL	**Scaling:** -	**Expert list:** 1
Min	**Max**	**Factory setting**
-	-	-

Description: Displays the control word of the speed controller.

Bit field:

Bit	Signal name	1 signal	0 signal	FP
08	Travel to fixed stop active	Yes	No	-
12	Torque control active	Yes	No	-

r1407.0...13 CO/BO: Status word speed controller / ZSW n_ctrl

SERVO_S110-DP, SERVO_S110-CAN, SERVO_S110-PN

Can be changed: -	**Calculated:** -	**Access level:** 3
Data type: Unsigned32	**Dyn. index:** -	**Func. diagram:** 1530, 2522
P-Group: Closed-loop control	**Unit group:** -	**Unit selection:** -
Not for motor type: REL	**Scaling:** -	**Expert list:** 1
Min	**Max**	**Factory setting**
-	-	-

Description: Displays the status word of the speed controller.

Bit field:

Bit	Signal name	1 signal	0 signal	FP
00	U/f control active	Yes	No	-
01	Encoderless operation active	Yes	No	-
02	Torque control active	Yes	No	8010
04	Speed setpoint from DSC	Yes	No	2522
05	Speed controller I component frozen	Yes	No	-
06	Speed controller I component set	Yes	No	-
07	Torque limit reached	Yes	No	5610
08	Upper torque limit active	Yes	No	5610
09	Lower torque limit active	Yes	No	5610
11	Speed setpoint limited	Yes	No	-
13	Encoderless operation due to a fault	Yes	No	-

Note: Re bit 04:
The following conditions must be fulfilled to set to 1:
- CI: p1190 and CI: p1191 must be interconnected with a signal source that is not equal to zero.
- it is not permissible that OFF1, OFF3 or STOP2 are active.
- it is not permissible that the motor data identification is active.
- Master control must not be active.
The following conditions can mean that the DSC function is not active in spite of the fact that the bit is set:
- clock-cycle synchronous operation is not selected (r2054 not equal to 4).
- the PROFIBUS is not clock-cycle synchronous (r2064[0] not equal to 1).
- DSC is not switched on at the control side; this means that KPC = 0 is transferred as the value at CI: p1191.

r1408.0...9 CO/BO: Status word current controller / ZSW I_ctrl

SERVO_S110-DP, SERVO_S110-CAN, SERVO_S110-PN

Can be changed: -	**Calculated:** -	**Access level:** 3
Data type: Unsigned16	**Dyn. index:** -	**Func. diagram:** 2530, 5040
P-Group: Closed-loop control	**Unit group:** -	**Unit selection:** -
Not for motor type: REL	**Scaling:** -	**Expert list:** 1
Min	**Max**	**Factory setting**
-	-	-

Description: Displays the current controller status word.

Bit field:

Bit	Signal name	1 signal	0 signal	FP
00	Cl-loop I_ctrl	Active	Not active	-
04	Limit Ud	Active	Not active	-
05	Limit Uq	Active	Not active	-
06	Positive limiting Iq	Active	Not active	-
07	Negative limiting Iq	Active	Not active	-
08	Limit iq_set	Active	Not active	-
09	Limit id_set	Active	Not active	-

Note: The set current limit is taken into account in upstream torque limiting. Bits 6, 7, and 8 are, therefore, only set in the event of overshoots on account of the current setpoint filter.

p1414[0...n] Speed setpoint filter activation / n_set_filt act

SERVO_S110-DP, SERVO_S110-CAN, SERVO_S110-PN

Can be changed: U, T	**Calculated:** -	**Access level:** 3
Data type: Unsigned16	**Dyn. index:** DDS, p0180	**Func. diagram:** 5020
P-Group: Closed-loop control	**Unit group:** -	**Unit selection:** -
Not for motor type: REL	**Scaling:** -	**Expert list:** 1
Min	**Max**	**Factory setting**
-	-	0000 bin

Description: Setting for activating/de-activating the speed setpoint filter.

Recommendation: If only one filter is required, filter 1 should be activated and filter 2 de-activated, to avoid excessive processing time.

Bit field:

Bit	Signal name	1 signal	0 signal	FP
00	Activate filter 1	Yes	No	-

Dependency: The individual speed setpoint filters are parameterized as of p1415.

p1415[0...n] Speed setpoint filter 1 type / n_set_filt 1 type

SERVO_S110-DP, SERVO_S110-CAN, SERVO_S110-PN

Can be changed: U, T	**Calculated:** -	**Access level:** 3
Data type: Integer16	**Dyn. index:** DDS, p0180	**Func. diagram:** 5020
P-Group: Closed-loop control	**Unit group:** -	**Unit selection:** -
Not for motor type: REL	**Scaling:** -	**Expert list:** 1
Min	**Max**	**Factory setting**
0	2	0

Description: Sets the type for speed setpoint filter 1.

Value:
0: Low pass: PT1
1: Low pass: PT2
2: General 2nd order filter

Dependency: PT1 low pass: p1416
PT2 low pass: p1417, p1418
General filter: p1417 ... p1420

p1416[0...n] Speed setpoint filter 1 time constant / n_set_filt 1 T

SERVO_S110-DP, SERVO_S110-CAN, SERVO_S110-PN

Can be changed: U, T	**Calculated:** -	**Access level:** 3
Data type: FloatingPoint32	**Dyn. index:** DDS, p0180	**Func. diagram:** 5020
P-Group: Closed-loop control	**Unit group:** -	**Unit selection:** -
Not for motor type: REL	**Scaling:** -	**Expert list:** 1
Min	**Max**	**Factory setting**
0.00 [ms]	5000.00 [ms]	0.00 [ms]

Description: Sets the time constant for the speed setpoint filter 1 (PT1).
Dependency: Refer to: p1414, p1415
Note: This parameter is only effective if the filter is set as a PT1 low pass.

p1417[0...n] Speed setpoint filter 1 denominator natural frequency / n_set_filt 1 fn_d

SERVO_S110-DP, SERVO_S110-CAN, SERVO_S110-PN

Can be changed: U, T	**Calculated:** -	**Access level:** 3
Data type: FloatingPoint32	**Dyn. index:** DDS, p0180	**Func. diagram:** 5020
P-Group: Closed-loop control	**Unit group:** -	**Unit selection:** -
Not for motor type: REL	**Scaling:** -	**Expert list:** 1
Min	**Max**	**Factory setting**
0.5 [Hz]	16000.0 [Hz]	2000.0 [Hz]

Description: Sets the denominator natural frequency for speed setpoint filter 1 (PT2, general filter).
Dependency: Refer to: p1414, p1415
Note: This parameter is only effective if the speed filter is parameterized as a PT2 low pass or as general filter.
The filter is only effective if the natural frequency is less than half of the sampling frequency.

p1418[0...n] Speed setpoint filter 1 denominator damping / n_set_filt 1 D_d

SERVO_S110-DP, SERVO_S110-CAN, SERVO_S110-PN

Can be changed: U, T	**Calculated:** -	**Access level:** 3
Data type: FloatingPoint32	**Dyn. index:** DDS, p0180	**Func. diagram:** 5020
P-Group: Closed-loop control	**Unit group:** -	**Unit selection:** -
Not for motor type: REL	**Scaling:** -	**Expert list:** 1
Min	**Max**	**Factory setting**
0.001	10.000	0.700

Description: Sets the denominator damping for speed setpoint filter 1 (PT2, general filter).
Dependency: Refer to: p1414, p1415
Note: This parameter is only effective if the speed filter is parameterized as a PT2 low pass or as general filter.

p1419[0...n] Speed setpoint filter 1 numerator natural frequency / n_set_filt 1 fn_n

SERVO_S110-DP, SERVO_S110-CAN, SERVO_S110-PN

Can be changed: U, T	**Calculated:** -	**Access level:** 3
Data type: FloatingPoint32	**Dyn. index:** DDS, p0180	**Func. diagram:** 5020
P-Group: Closed-loop control	**Unit group:** -	**Unit selection:** -
Not for motor type: REL	**Scaling:** -	**Expert list:** 1
Min	**Max**	**Factory setting**
0.5 [Hz]	16000.0 [Hz]	2000.0 [Hz]

Description: Sets the numerator natural frequency for speed setpoint filter 1 (general filter).
Dependency: Refer to: p1414, p1415
Note: This parameter is only effective if the speed filter is set as a general filter.
The filter is only effective if the natural frequency is less than half of the sampling frequency.

p1420[0...n] Speed setpoint filter 1 numerator damping / n_set_filt 1 D_n

SERVO_S110-DP, SERVO_S110-CAN, SERVO_S110-PN

Can be changed: U, T	**Calculated:** -	**Access level:** 3
Data type: FloatingPoint32	**Dyn. index:** DDS, p0180	**Func. diagram:** 5020
P-Group: Closed-loop control	**Unit group:** -	**Unit selection:** -
Not for motor type: REL	**Scaling:** -	**Expert list:** 1
Min	**Max**	**Factory setting**
0.000	10.000	0.700

Description: Sets the numerator damping for speed setpoint filter 1 (general filter).

Dependency: Refer to: p1414, p1415

Note: This parameter is only effective if the speed filter is set as a general filter.

p1428[0...n] Speed pre-control balancing dead time / n_prectrBal t_dead

SERVO_S110-DP, SERVO_S110-CAN, SERVO_S110-PN

Can be changed: U, T	**Calculated:** -	**Access level:** 3
Data type: FloatingPoint32	**Dyn. index:** DDS, p0180	**Func. diagram:** 5030, 5042, 5210
P-Group: Closed-loop control	**Unit group:** -	**Unit selection:** -
Not for motor type: REL	**Scaling:** -	**Expert list:** 1
Min	**Max**	**Factory setting**
0.0	2.0	0.0

Description: Sets the dead time to symmetrize the speed setpoint for active torque pre-control.
The selected multiplier refers to the speed controller clock cycle (dead time= p1428 * p0115[1]).

Dependency: In conjunction with p1429, this parameter can emulate the characteristics of how the torque is established (dynamic response of closed current control loop).
Refer to: p1429, p1511

p1429[0...n] Speed pre-control balancing time constant / n_prectr bal T

SERVO_S110-DP, SERVO_S110-CAN, SERVO_S110-PN

Can be changed: U, T	**Calculated:** -	**Access level:** 3
Data type: FloatingPoint32	**Dyn. index:** DDS, p0180	**Func. diagram:** 5042, 5210
P-Group: Closed-loop control	**Unit group:** -	**Unit selection:** -
Not for motor type: REL	**Scaling:** -	**Expert list:** 1
Min	**Max**	**Factory setting**
0.00 [ms]	10000.00 [ms]	0.00 [ms]

Description: Sets the time constant (PT1) for symmetrizing the speed setpoint for active torque pre-control.

Dependency: In conjunction with p1428, this parameter can emulate the characteristics of how torque is established (dynamic response of the closed current control loop).
Refer to: p1428, p1511

p1430[0...n] CI: Speed precontrol / n_prectrl

SERVO_S110-DP, SERVO_S110-CAN, SERVO_S110-PN

Can be changed: T	**Calculated:** -	**Access level:** 3
Data type: Unsigned32 / FloatingPoint32	**Dyn. index:** CDS, p0170	**Func. diagram:** 1550, 1590, 5020
P-Group: Closed-loop control	**Unit group:** -	**Unit selection:** -
Not for motor type: REL	**Scaling:** p2000	**Expert list:** 1
Min	**Max**	**Factory setting**
-	-	0

Description: Sets the signal source for speed pre-control channel (speed pre-control or torque pre-control).

Notice: The parameter may be protected as a result of p0922 or p2079 and cannot be changed.

Note: The pre-control signal via connector input p1430 only becomes effective at p1402.4 = 1 (torque-speed pre-control with encoder) at p1400.10 = 0 (for setp_filter 2).

r1432 CO: Speed pre-control after symmetrizing / n_prectr after sym

SERVO_S110-DP, SERVO_S110-CAN, SERVO_S110-PN

Can be changed: -	**Calculated:** -	**Access level:** 3
Data type: FloatingPoint32	**Dyn. index:** -	**Func. diagram:** 5030
P-Group: Closed-loop control	**Unit group:** 3_1	**Unit selection:** p0505
Not for motor type: REL	**Scaling:** p2000	**Expert list:** 1
Min	**Max**	**Factory setting**
- [rpm]	- [rpm]	- [rpm]

Description: Displays the speed pre-control value after symmetrizing for the torque build-up (emulates the closed current control loop).

Dependency: Symmetrizing can be parameterized with p1428 and/or p1429.

p1433[0...n] Speed controller reference model natural frequency / n_ctrl RefMod fn

SERVO_S110-DP, SERVO_S110-CAN, SERVO_S110-PN

Can be changed: U, T	**Calculated:** -	**Access level:** 3
Data type: FloatingPoint32	**Dyn. index:** DDS, p0180	**Func. diagram:** 5030
P-Group: Closed-loop control	**Unit group:** -	**Unit selection:** -
Not for motor type: REL	**Scaling:** -	**Expert list:** 1
Min	**Max**	**Factory setting**
0.0 [Hz]	8000.0 [Hz]	0.0 [Hz]

Description: Sets the natural frequency of a PT2 element for the reference model of the speed controller.

Recommendation: The reference model is correctly set when the characteristics of p1439 (reference model output) and p1445 (actual speed value) are virtually identical when the I component of the speed controller is disabled.

Dependency: Together with p1434 and p1435, the characteristics (in the time domain) of the closed-loop speed control (P) can be emulated.
Refer to: p1434, p1435

p1434[0...n] Speed controller reference model damping / n_ctrl RefMod D

SERVO_S110-DP, SERVO_S110-CAN, SERVO_S110-PN

Can be changed: U, T	**Calculated:** -	**Access level:** 3
Data type: FloatingPoint32	**Dyn. index:** DDS, p0180	**Func. diagram:** 5030
P-Group: Closed-loop control	**Unit group:** -	**Unit selection:** -
Not for motor type: REL	**Scaling:** -	**Expert list:** 1
Min	**Max**	**Factory setting**
0.000	5.000	1.000

Description: Sets the damping of a PT2 element for the reference model of the speed controller.

Recommendation: The reference model is correctly set when the characteristics of p1439 (reference model output) and p1445 (actual speed value) are virtually identical when the I component of the speed controller is disabled.

Dependency: In conjunction with p1433 and p1435, the characteristics (in time) of the P-controlled speed control loop can be emulated.
Refer to: p1433, p1435

p1435[0...n] Speed controller reference model dead time / n_ctrRefMod t_dead

SERVO_S110-DP, SERVO_S110-CAN, SERVO_S110-PN

Can be changed: U, T	**Calculated:** -	**Access level:** 2
Data type: FloatingPoint32	**Dyn. index:** DDS, p0180	**Func. diagram:** 5030
P-Group: Closed-loop control	**Unit group:** -	**Unit selection:** -
Not for motor type: REL	**Scaling:** -	**Expert list:** 1
Min	**Max**	**Factory setting**
0.00	2.00	0.00

Description: Sets the "fractional" dead time for the reference model of the speed controller.
This parameter emulates the computing dead time of the proportionally controlled speed control loop.
The selected multiplier refers to the speed controller clock cycle (dead time= p1435 * p0115[1]).

Recommendation: The reference model is correctly set when the characteristics of p1439 (reference model output) and p1445 (actual speed value) are virtually identical when the I component of the speed controller is disabled.

Dependency: In conjunction with p1433 and p1434, the characteristics (in time) of the P-controlled speed control loop can be emulated.
Refer to: p0115, p1433, p1434

r1436 CO: Speed controller reference model speed setpoint output / RefMod n_set outp

SERVO_S110-DP, SERVO_S110-CAN, SERVO_S110-PN

Can be changed: -	**Calculated:** -	**Access level:** 3
Data type: FloatingPoint32	**Dyn. index:** -	**Func. diagram:** 5030
P-Group: Closed-loop control	**Unit group:** 3_1	**Unit selection:** p0505
Not for motor type: REL	**Scaling:** p2000	**Expert list:** 1
Min	**Max**	**Factory setting**
- [rpm]	- [rpm]	- [rpm]

Description: Displays the speed setpoint at the output of the reference model.

r1438 CO: Speed controller speed setpoint / n_ctrl n_set

SERVO_S110-DP, SERVO_S110-CAN, SERVO_S110-PN

Can be changed: -	**Calculated:** -	**Access level:** 3
Data type: FloatingPoint32	**Dyn. index:** -	**Func. diagram:** 1550, 1590, 1700, 5030, 5040, 5042, 5210, 5300, 5620, 6031, 6040
P-Group: Closed-loop control	**Unit group:** 3_1	**Unit selection:** p0505
Not for motor type: REL	**Scaling:** p2000	**Expert list:** 1
Min	**Max**	**Factory setting**
- [rpm]	- [rpm]	- [rpm]

Description: Displays the speed setpoint after setpoint limiting for the P component of the speed controller.
For U/f operation, the value that is displayed is of no relevance.
Dependency: Refer to: r1439
Note: In the standard state (the reference model is de-activated), r1438 = r1439.

r1439 Speed setpoint I component / n_set I_comp

SERVO_S110-DP, SERVO_S110-CAN, SERVO_S110-PN

Can be changed: -	**Calculated:** -	**Access level:** 3
Data type: FloatingPoint32	**Dyn. index:** -	**Func. diagram:** 5030, 5040, 6031
P-Group: Closed-loop control	**Unit group:** 3_1	**Unit selection:** p0505
Not for motor type: REL	**Scaling:** p2000	**Expert list:** 1
Min	**Max**	**Factory setting**
- [rpm]	- [rpm]	- [rpm]

Description: Displays the speed setpoint for the I component of the speed controller (output of the reference model after the setpoint limiting).
Dependency: Refer to: r1438
Note: In the standard state (the reference model is de-activated), r1438 = r1439.

p1441[0...n] Actual speed smoothing time / n_act T_smooth

SERVO_S110-DP, SERVO_S110-CAN, SERVO_S110-PN

Can be changed: U, T	**Calculated:** CALC_MOD_CON	**Access level:** 3
Data type: FloatingPoint32	**Dyn. index:** DDS, p0180	**Func. diagram:** 4710, 4715
P-Group: Closed-loop control	**Unit group:** -	**Unit selection:** -
Not for motor type: REL	**Scaling:** -	**Expert list:** 1
Min	**Max**	**Factory setting**
0.00 [ms]	50.00 [ms]	0.00 [ms]

Description: Sets the smoothing time constant (PT1) for the speed actual value.
Dependency: Refer to: r0063, p1451
Note: The speed actual value should be smoothed for encoders with a low pulse number or for resolvers.
After this parameter has been changed, we recommend that the speed controller is adapted and/or the speed controller settings checked Kp (p1460) and Tn (p1462).

r1444 Speed controller speed setpoint steady-state (static) / n_ctrl n_set stat

SERVO_S110-DP, SERVO_S110-CAN, SERVO_S110-PN

Can be changed: -	**Calculated:** -	**Access level:** 3
Data type: FloatingPoint32	**Dyn. index:** -	**Func. diagram:** 5030
P-Group: Closed-loop control	**Unit group:** 3_1	**Unit selection:** p0505
Not for motor type: REL	**Scaling:** p2000	**Expert list:** 1
Min	**Max**	**Factory setting**
- [rpm]	- [rpm]	- [rpm]

Description: Displays the sum of all speed setpoints that are present.
The following sources are available for the displayed setpoint:
- setpoint at the ramp-function generator input (r1119).
- speed setpoint 1 (p1155).
- speed setpoint 2 (p1160).
- speed setpoint for the speed pre-control (p1430).
- setpoint from DSC (for DSC active).
- setpoint via PC (for master control active).

Dependency: Refer to: r1119, p1155, p1160, p1430

p1451[0...n] Speed actual value smoothing time sensorless / n_act t_sm SL

SERVO_S110-DP, SERVO_S110-CAN, SERVO_S110-PN

Can be changed: U, T	**Calculated:** -	**Access level:** 3
Data type: FloatingPoint32	**Dyn. index:** DDS, p0180	**Func. diagram:** -
P-Group: Closed-loop control	**Unit group:** -	**Unit selection:** -
Not for motor type: REL	**Scaling:** -	**Expert list:** 1
Min	**Max**	**Factory setting**
0 [ms]	100 [ms]	0 [ms]

Description: Sets the smoothing time for the calculated speed actual value in sensorless operation.

Dependency: Refer to: p1441

r1454 CO: Speed controller system deviation I component / n_ctrl sys dev Tn

SERVO_S110-DP, SERVO_S110-CAN, SERVO_S110-PN

Can be changed: -	**Calculated:** -	**Access level:** 3
Data type: FloatingPoint32	**Dyn. index:** -	**Func. diagram:** 5040
P-Group: Closed-loop control	**Unit group:** 3_1	**Unit selection:** p0505
Not for motor type: REL	**Scaling:** p2000	**Expert list:** 1
Min	**Max**	**Factory setting**
- [rpm]	- [rpm]	- [rpm]

Description: Displays the system deviation of the I component of the speed controller.
When the reference model is inactive (p1433 = 0 Hz), this parameter corresponds to the system deviation of the complete PI controller (r1454 = r0064).

p1455[0...n] CI: Speed controller P gain adaptation signal / n_ctr adapt_sig Kp

SERVO_S110-DP, SERVO_S110-CAN, SERVO_S110-PN

Can be changed: T	**Calculated:** -	**Access level:** 3
Data type: Unsigned32 / FloatingPoint32	**Dyn. index:** CDS, p0170	**Func. diagram:** 5050
P-Group: Closed-loop control	**Unit group:** -	**Unit selection:** -
Not for motor type: REL	**Scaling:** PERCENT	**Expert list:** 1
Min	**Max**	**Factory setting**
-	-	0

Description: Sets the source for the adaptation signal to additionally adapt the P gain of the speed controller.

Dependency: Refer to: p1456, p1457, p1458, p1459

p1456[0...n] Speed controller P gain adaptation lower starting point / n_ctrl AdaptKpLow

SERVO_S110-DP, SERVO_S110-CAN, SERVO_S110-PN

Can be changed: U, T	**Calculated:** -	**Access level:** 3
Data type: FloatingPoint32	**Dyn. index:** DDS, p0180	**Func. diagram:** 5050
P-Group: Closed-loop control	**Unit group:** -	**Unit selection:** -
Not for motor type: REL	**Scaling:** -	**Expert list:** 1
Min	**Max**	**Factory setting**
0.00 [%]	400.00 [%]	0.00 [%]

Description: Sets the lower starting point of the adaptation range for the additional adaptation of the P gain of the speed controller.
The values are in % and refer to the set source of the adaptation signal.

Dependency: Refer to: p1455, p1457, p1458, p1459

p1457[0...n] Speed controller P gain adaptation upper starting point / n_ctrl AdaptKp up

SERVO_S110-DP, SERVO_S110-CAN, SERVO_S110-PN

Can be changed: U, T	**Calculated:** -	**Access level:** 3
Data type: FloatingPoint32	**Dyn. index:** DDS, p0180	**Func. diagram:** 5050
P-Group: Closed-loop control	**Unit group:** -	**Unit selection:** -
Not for motor type: REL	**Scaling:** -	**Expert list:** 1
Min	**Max**	**Factory setting**
0.00 [%]	400.00 [%]	0.00 [%]

Description: Sets the upper starting point of the adaptation range for the additional adaptation of the P gain of the speed controller.
The values are in % and refer to the set source of the adaptation signal.

Dependency: Refer to: p1455, p1456, p1458, p1459

p1458[0...n] Adaptation factor lower / Adapt_factor lower

SERVO_S110-DP, SERVO_S110-CAN, SERVO_S110-PN

Can be changed: U, T	**Calculated:** -	**Access level:** 3
Data type: FloatingPoint32	**Dyn. index:** DDS, p0180	**Func. diagram:** 5050
P-Group: Closed-loop control	**Unit group:** -	**Unit selection:** -
Not for motor type: REL	**Scaling:** -	**Expert list:** 1
Min	**Max**	**Factory setting**
0.0 [%]	200000.0 [%]	100.0 [%]

Description: Sets the adaptation factor before the adaptation range (0 % ... p1456) to additionally adapt the P gain of the speed/velocity controller.

Dependency: Refer to: p1455, p1456, p1457, p1459

p1459[0...n] Adaptation factor upper / Adapt_factor upper

SERVO_S110-DP, SERVO_S110-CAN, SERVO_S110-PN

Can be changed: U, T	**Calculated:** -	**Access level:** 3
Data type: FloatingPoint32	**Dyn. index:** DDS, p0180	**Func. diagram:** 5050
P-Group: Closed-loop control	**Unit group:** -	**Unit selection:** -
Not for motor type: REL	**Scaling:** -	**Expert list:** 1
Min	**Max**	**Factory setting**
0.0 [%]	200000.0 [%]	100.0 [%]

Description: Sets the adaptation factor after the adaptation range (> p1457) to additionally adapt the P gain of the speed/velocity controller.

Dependency: Refer to: p1455, p1456, p1457, p1458

p1460[0...n] Speed controller P gain adaptation speed lower / n_ctrl Kp n lower

SERVO_S110-DP, SERVO_S110-CAN, SERVO_S110-PN

Can be changed: U, T	**Calculated:** CALC_MOD_CON	**Access level:** 2
Data type: FloatingPoint32	**Dyn. index:** DDS, p0180	**Func. diagram:** 5040, 5042
P-Group: Closed-loop control	**Unit group:** 17_1	**Unit selection:** p0505
Not for motor type: REL	**Scaling:** -	**Expert list:** 1
Min	**Max**	**Factory setting**
0.000 [Nms/rad]	999999.000 [Nms/rad]	0.300 [Nms/rad]

Description: Sets the P gain of the speed controller before the adaptation speed range (0 ... p1464). This value corresponds to the basic setting of the P gain of the speed controller without adaptation (p1461 = 100 %).

Dependency: Refer to: p1461, p1464, p1465

Note: When automatically calculating the speed controller, only the motor moment of inertia is taken into account (p0341). For higher load moments of inertia (p0342 > 1 or p1498 > 0), you are advised to check the speed controller gain.

p1461[0...n] Speed controller Kp adaptation speed upper scaling / n_ctrl Kp n upper

SERVO_S110-DP, SERVO_S110-CAN, SERVO_S110-PN

Can be changed: U, T	**Calculated:** CALC_MOD_CON	**Access level:** 3
Data type: FloatingPoint32	**Dyn. index:** DDS, p0180	**Func. diagram:** 5050
P-Group: Closed-loop control	**Unit group:** -	**Unit selection:** -
Not for motor type: REL	**Scaling:** -	**Expert list:** 1
Min	**Max**	**Factory setting**
0.0 [%]	200000.0 [%]	100.0 [%]

Description: Sets the P gain of the speed controller for the upper adaptation speed range (> p1465). The entry is made referred to the P gain for the lower adaptation speed range of the speed controller (% referred to p1460).

Dependency: Refer to: p1460, p1464, p1465

Note: When automatically calculating the speed controller, only the motor moment of inertia is taken into account (p0341). For higher load moments of inertia (p0342 > 1 or p1498 > 0), you are advised to check the speed controller gain.

p1462[0...n] Speed controller integral time adaptation speed lower / n_ctrl Tn n lower

SERVO_S110-DP, SERVO_S110-CAN, SERVO_S110-PN

Can be changed: U, T	**Calculated:** CALC_MOD_CON	**Access level:** 2
Data type: FloatingPoint32	**Dyn. index:** DDS, p0180	**Func. diagram:** 1700, 5040, 5042, 6040
P-Group: Closed-loop control	**Unit group:** -	**Unit selection:** -
Not for motor type: REL	**Scaling:** -	**Expert list:** 1
Min	**Max**	**Factory setting**
0.00 [ms]	100000.00 [ms]	20.00 [ms]

Description: Sets the integration time of the speed controller before the adaptation speed range (0 ... p1464).
This value corresponds to the basic setting of the integral time of the speed controller without adaptation (p1461 = 100 %).

Dependency: Refer to: p1463, p1464, p1465

p1463[0...n] Speed controller Tn adaptation speed upper scaling / n_ctrl Tn n upper

SERVO_S110-DP, SERVO_S110-CAN, SERVO_S110-PN

Can be changed: U, T	**Calculated:** CALC_MOD_CON	**Access level:** 3
Data type: FloatingPoint32	**Dyn. index:** DDS, p0180	**Func. diagram:** 5050
P-Group: Closed-loop control	**Unit group:** -	**Unit selection:** -
Not for motor type: REL	**Scaling:** -	**Expert list:** 1
Min	**Max**	**Factory setting**
0.0 [%]	200000.0 [%]	100.0 [%]

Description: Sets the integral time of the speed controller after the adaptation speed range (> p1465). The entry is made referred to the integral time for the lower adaptation speed range of the speed controller (% referred to p1462).

Dependency: Refer to: p1462, p1464, p1465

p1464[0...n] Speed controller adaptation speed lower / n_ctrl n lower

SERVO_S110-DP, SERVO_S110-CAN, SERVO_S110-PN

Can be changed: U, T	**Calculated:** CALC_MOD_CON	**Access level:** 3
Data type: FloatingPoint32	**Dyn. index:** DDS, p0180	**Func. diagram:** 5050
P-Group: Closed-loop control	**Unit group:** 3_1	**Unit selection:** p0505
Not for motor type: REL	**Scaling:** -	**Expert list:** 1
Min	**Max**	**Factory setting**
0.00 [rpm]	210000.00 [rpm]	0.00 [rpm]

Description: Sets the lower adaptation speed of the speed controller.
No adaptation is effective below this speed.

Dependency: Refer to: p1460, p1461, p1462, p1463, p1465

p1465[0...n] Speed controller adaptation speed upper / n_ctrl n upper

SERVO_S110-DP, SERVO_S110-CAN, SERVO_S110-PN

Can be changed: U, T	**Calculated:** CALC_MOD_CON	**Access level:** 3
Data type: FloatingPoint32	**Dyn. index:** DDS, p0180	**Func. diagram:** 5050
P-Group: Closed-loop control	**Unit group:** 3_1	**Unit selection:** p0505
Not for motor type: REL	**Scaling:** -	**Expert list:** 1
Min	**Max**	**Factory setting**
0.00 [rpm]	210000.00 [rpm]	210000.00 [rpm]

Description: Sets the upper adaptation speed of the speed controller.
No adaptation is effective above this speed.
For P gain, p1460 x p1461 is effective. For the integral time, p1462 x p1463 is effective.

Dependency: Refer to: p1460, p1461, p1462, p1463, p1464

p1466[0...n] CI: Speed controller P-gain scaling / n_ctrl Kp scal

SERVO_S110-DP, SERVO_S110-CAN, SERVO_S110-PN

Can be changed: T	**Calculated:** -	**Access level:** 3
Data type: Unsigned32 / FloatingPoint32	**Dyn. index:** CDS, p0170	**Func. diagram:** 5050
P-Group: Closed-loop control	**Unit group:** -	**Unit selection:** -
Not for motor type: REL	**Scaling:** PERCENT	**Expert list:** 1
Min	**Max**	**Factory setting**
-	-	1

Description: Sets the signal source for the scaling of the P gain of the speed controller. This also makes the effective P gain (including adaptations) scalable.

r1468 Speed controller P-gain effective / n_ctr Kp eff

SERVO_S110-DP, SERVO_S110-CAN, SERVO_S110-PN

Can be changed: -	**Calculated:** -	**Access level:** 3
Data type: FloatingPoint32	**Dyn. index:** -	**Func. diagram:** 5040, 5042, 5210
P-Group: Closed-loop control	**Unit group:** 17_1	**Unit selection:** p0505
Not for motor type: REL	**Scaling:** -	**Expert list:** 1
Min	**Max**	**Factory setting**
- [Nms/rad]	- [Nms/rad]	- [Nms/rad]

Description: Displays the effective P gain of the speed controller.

r1469 Speed controller integral time effective / n_ctr Tn eff

SERVO_S110-DP, SERVO_S110-CAN, SERVO_S110-PN

Can be changed: -	**Calculated:** -	**Access level:** 3
Data type: FloatingPoint32	**Dyn. index:** -	**Func. diagram:** 5040, 5042, 6040
P-Group: Closed-loop control	**Unit group:** -	**Unit selection:** -
Not for motor type: REL	**Scaling:** -	**Expert list:** 1
Min	**Max**	**Factory setting**
- [ms]	- [ms]	- [ms]

Description: Displays the effective integral time of the speed controller.

p1470[0...n] Speed controller encoderless operation P-gain / n_ctrl SLVC Kp

SERVO_S110-DP, SERVO_S110-CAN, SERVO_S110-PN

Can be changed: U, T	**Calculated:** CALC_MOD_CON	**Access level:** 2
Data type: FloatingPoint32	**Dyn. index:** DDS, p0180	**Func. diagram:** 5210
P-Group: Closed-loop control	**Unit group:** 17_1	**Unit selection:** p0505
Not for motor type: REL	**Scaling:** -	**Expert list:** 1
Min	**Max**	**Factory setting**
0.000 [Nms/rad]	999999.000 [Nms/rad]	0.300 [Nms/rad]

Description: Sets the P gain for encoderless operation for the speed controller.

Note: When automatically calculating the speed controller, only the motor moment of inertia is taken into account (p0341). For higher load moments of inertia (p0342 > 1 or p1498 > 0), you are advised to check the speed controller gain.

p1472[0...n] Speed controller encoderless operation integral time / n_ctrl SLVC Tn

SERVO_S110-DP, SERVO_S110-CAN, SERVO_S110-PN

Can be changed: U, T	**Calculated:** CALC_MOD_CON	**Access level:** 2
Data type: FloatingPoint32	**Dyn. index:** DDS, p0180	**Func. diagram:** 5210
P-Group: Closed-loop control	**Unit group:** -	**Unit selection:** -
Not for motor type: REL	**Scaling:** -	**Expert list:** 1
Min	**Max**	**Factory setting**
0.0 [ms]	100000.0 [ms]	20.0 [ms]

Description: Set the integral time for encoderless operation for the speed controller.

p1476[0...n] BI: Speed controller hold integrator / n_ctrl integ stop

SERVO_S110-DP, SERVO_S110-CAN, SERVO_S110-PN

Can be changed: T	**Calculated:** -	**Access level:** 3
Data type: Unsigned32 / Binary	**Dyn. index:** CDS, p0170	**Func. diagram:** 2520, 5040, 5042, 5210, 6040
P-Group: Closed-loop control	**Unit group:** -	**Unit selection:** -
Not for motor type: REL	**Scaling:** -	**Expert list:** 1
Min	**Max**	**Factory setting**
-	-	0

Description: Sets the signal source to hold the integrator for the speed controller.

p1477[0...n] BI: Speed controller set integrator value / n_ctrl integ set

SERVO_S110-DP, SERVO_S110-CAN, SERVO_S110-PN

Can be changed: T	**Calculated:** -	**Access level:** 3
Data type: Unsigned32 / Binary	**Dyn. index:** CDS, p0170	**Func. diagram:** 2520, 5040, 5042, 5210, 6040
P-Group: Closed-loop control	**Unit group:** -	**Unit selection:** -
Not for motor type: REL	**Scaling:** -	**Expert list:** 1
Min	**Max**	**Factory setting**
-	-	0

Description: Sets the signal source to set the integrator setting value (p1478).

Dependency: Refer to: p1478

Notice: The parameter may be protected as a result of p0922 or p2079 and cannot be changed.

Note: For the interface mode "SIMODRIVE 611 universal" (p2038 = 1), p1477 and p1478 are used for the signal STW2.6 (integrator inhibit, speed controller).

p1478[0...n] CI: Speed controller integrator setting value / n_ctr integ_setVal

SERVO_S110-DP, SERVO_S110-CAN, SERVO_S110-PN

Can be changed: T	**Calculated:** -	**Access level:** 3
Data type: Unsigned32 / FloatingPoint32	**Dyn. index:** CDS, p0170	**Func. diagram:** 5040, 5042, 5210
P-Group: Closed-loop control	**Unit group:** -	**Unit selection:** -
Not for motor type: REL	**Scaling:** p2003	**Expert list:** 1
Min	**Max**	**Factory setting**
-	-	0

Description: Sets the signal source for the integrator setting value for the velocity controller.
The signal to set this integrator setting value is interconnected via p1477.

Dependency: Refer to: p1477

Notice: The parameter may be protected as a result of p0922 or p2079 and cannot be changed.

Note: For the interface mode "SIMODRIVE 611 universal" (p2038 = 1), p1477 and p1478 are used for the signal STW2.6 (integrator inhibit, speed controller).

r1480 CO: Speed controller PI torque output / n_ctrl PI-M_output

SERVO_S110-DP, SERVO_S110-CAN, SERVO_S110-PN

Can be changed: -	**Calculated:** -	**Access level:** 3
Data type: FloatingPoint32	**Dyn. index:** -	**Func. diagram:** 1590, 5040, 5042, 5060, 5210, 6060
P-Group: Closed-loop control	**Unit group:** 7_1	**Unit selection:** p0505
Not for motor type: REL	**Scaling:** p2003	**Expert list:** 1
Min	**Max**	**Factory setting**
- [Nm]	- [Nm]	- [Nm]

Description: Displays the torque setpoint at the output of the PI speed controller.

r1481 CO: Speed controller P torque output / n_ctrl P-M_output

SERVO_S110-DP, SERVO_S110-CAN, SERVO_S110-PN

Can be changed: -	**Calculated:** -	**Access level:** 3
Data type: FloatingPoint32	**Dyn. index:** -	**Func. diagram:** 5040, 5042, 5210, 6040
P-Group: Closed-loop control	**Unit group:** 7_1	**Unit selection:** p0505
Not for motor type: REL	**Scaling:** p2003	**Expert list:** 1
Min	**Max**	**Factory setting**
- [Nm]	- [Nm]	- [Nm]

Description: Displays the torque setpoint at the output of the P speed controller.

r1482 CO: Speed controller I torque output / n_ctrl I-M_output

SERVO_S110-DP, SERVO_S110-CAN, SERVO_S110-PN

Can be changed: -	**Calculated:** -	**Access level:** 3
Data type: FloatingPoint32	**Dyn. index:** -	**Func. diagram:** 5040, 5042, 5210, 6030, 6040
P-Group: Closed-loop control	**Unit group:** 7_1	**Unit selection:** p0505
Not for motor type: REL	**Scaling:** p2003	**Expert list:** 1
Min	**Max**	**Factory setting**
- [Nm]	- [Nm]	- [Nm]

Description: Displays the torque setpoint at the output of the I speed controller.

r1493 CO: Moment of inertia total / M_inertia total

SERVO_S110-DP, SERVO_S110-CAN, SERVO_S110-PN

Can be changed: -	**Calculated:** -	**Access level:** 3
Data type: FloatingPoint32	**Dyn. index:** -	**Func. diagram:** 5042, 5210
P-Group: Closed-loop control	**Unit group:** 25_1	**Unit selection:** p0100
Not for motor type: REL	**Scaling:** -	**Expert list:** 1
Min	**Max**	**Factory setting**
- [kgm²]	- [kgm²]	- [kgm²]

Description: Displays the parameterized total moment of inertia ((p0341 * p0342) + p1498) without evaluation by the scaling via p1497.

Dependency: Refer to: p1300, p1402, p1404, p1497

Note: The parameterized total moment of inertia, taking into account p1497, influences the torque pre-control.

In encoderless operation or when the torque-speed pre-control with encoder (p1402.4 = 1) is activated, then torque-speed pre-control is activated.

p1494[0...n] Speed controller integrator feedback time constant / n_ctr integ_fdbk T

SERVO_S110-DP, SERVO_S110-CAN, SERVO_S110-PN

Can be changed: U, T	**Calculated:** -	**Access level:** 2
Data type: FloatingPoint32	**Dyn. index:** DDS, p0180	**Func. diagram:** 5040, 5042, 5210
P-Group: Closed-loop control	**Unit group:** -	**Unit selection:** -
Not for motor type: REL	**Scaling:** -	**Expert list:** 1
Min	**Max**	**Factory setting**
0.00 [ms]	1000.00 [ms]	0.00 [ms]

Description: Sets the time constant of the PT1 filter for integrator feedback.

The integrator of the speed controller is re-parameterized to become a PT1 filter through a feedback element (1st Order low pass filter characteristics).

The following applies:

p1494 < 0.25 (2 x p0115[1]) --> the PT1 filter is not active - the pure integrator is effective.

p1494 >= 0.25 (2 x p0115[1]) --> the PT1 filter is active and has replaced the pure integrator.

Note: Applications:

Motion at zero setpoint and dominant stiction can be suppressed but this has a negative impact on the remaining setpoint-actual value difference. This can be used, for example, to avoid oscillation of a position-controlled axis at standstill (stick-slip effect) or overshoot when traversing (moving) in micrometer steps.

Also prevents tension/stressing for axes that are mechanically and rigidly coupled with one another (e.g. for synchronous spindles, master - slave axes).

p1497[0...n] CI: Moment of inertia scaling / M_mom inert scal

SERVO_S110-DP, SERVO_S110-CAN, SERVO_S110-PN

Can be changed: U, T	**Calculated:** -	**Access level:** 3
Data type: Unsigned32 / FloatingPoint32	**Dyn. index:** CDS, p0170	**Func. diagram:** 5042, 5210, 6030, 6031
P-Group: Closed-loop control	**Unit group:** -	**Unit selection:** -
Not for motor type: REL	**Scaling:** PERCENT	**Expert list:** 1
Min	**Max**	**Factory setting**
-	-	1

Description: Sets the signal source for scaling the moment of inertia.

Notice: This parameter has no effect when the "moment of inertia estimator" function is active (r0108.10 = 1, p1400.18 = 1).

p1498[0...n] Load moment of inertia / Load mom of inert

SERVO_S110-DP, SERVO_S110-CAN, SERVO_S110-PN

Can be changed: U, T	**Calculated:** -	**Access level:** 3
Data type: FloatingPoint32	**Dyn. index:** DDS, p0180	**Func. diagram:** 5042, 5210
P-Group: Closed-loop control	**Unit group:** 25_1	**Unit selection:** p0100
Not for motor type: -	**Scaling:** -	**Expert list:** 1
Min	**Max**	**Factory setting**
0.00000 [kgm²]	100000.00000 [kgm²]	0.00000 [kgm²]

Description: Sets the load moment of inertia.

Note: (p0341 * p0342) + p1498 influence the speed/torque pre-control in encoderless operation.

p1501[0...n] BI: Change over between closed-loop speed/torque control / Changeov n/M_ctrl

SERVO_S110-DP, SERVO_S110-CAN, SERVO_S110-PN

Can be changed: U, T	**Calculated:** -	**Access level:** 3
Data type: Unsigned32 / Binary	**Dyn. index:** CDS, p0170	**Func. diagram:** 1700, 2520, 5060, 6060
P-Group: Closed-loop control	**Unit group:** -	**Unit selection:** -
Not for motor type: REL	**Scaling:** -	**Expert list:** 1
Min	**Max**	**Factory setting**
-	-	0

Description: Sets the signal source for toggling between speed and torque control.

Dependency: The input connectors to enter the torque are provided using p1511, p1512 and p1513.
Refer to: p1300

Caution: If the closed-loop torque control is not activated (p1300) and a change is made to closed-loop torque control (p1501), OFF1 (p0840) does not have its own braking response but pulse suppression when standstill is detected (p1226, p1227).

Notice: The parameter may be protected as a result of p0922 or p2079 and cannot be changed.

Note: 0 signal: Closed-loop speed control
1 signal: Closed-loop torque control

p1502[0...n] BI: Freeze moment of inertia estimator / J_estim freeze

SERVO_S110-DP, SERVO_S110-CAN, SERVO_S110-PN

Can be changed: U, T	**Calculated:** -	**Access level:** 3
Data type: Unsigned32 / Binary	**Dyn. index:** CDS, p0170	**Func. diagram:** -
P-Group: Closed-loop control	**Unit group:** -	**Unit selection:** -
Not for motor type: -	**Scaling:** -	**Expert list:** 1
Min	**Max**	**Factory setting**
-	-	0

Description: Sets the signal source to freeze the estimated moment of inertia.
0 signal:
Moment of inertia estimator active
1 signal:
Determined moment of inertia frozen.

Dependency: Refer to: p1300

Note: Only active when the "moment of inertia estimator" function module is active (r0108.10 = 1) and p1400.18 =1.
For operation with encoder, in addition, p1402.4 must be set to 1.

r1509 CO: Torque setpoint before torque limiting / M_set before M_lim

SERVO_S110-DP, SERVO_S110-CAN, SERVO_S110-PN

Can be changed: -	**Calculated:** -	**Access level:** 3
Data type: FloatingPoint32	**Dyn. index:** -	**Func. diagram:** 1590, 5060, 5610
P-Group: Closed-loop control	**Unit group:** 7_1	**Unit selection:** p0505
Not for motor type: REL	**Scaling:** p2003	**Expert list:** 1
Min	**Max**	**Factory setting**
- [Nm]	- [Nm]	- [Nm]

Description: Displays the total torque setpoint before the torque limiting (total of the controller output, supplementary torque and if required, the pre-control torque, encoderless operation).

p1511[0...n] CI: Supplementary torque 1 / M_suppl 1

SERVO_S110-DP, SERVO_S110-CAN, SERVO_S110-PN

Can be changed: T	**Calculated:** -	**Access level:** 3
Data type: Unsigned32 / FloatingPoint32	**Dyn. index:** CDS, p0170	**Func. diagram:** 5060, 6060
P-Group: Closed-loop control	**Unit group:** -	**Unit selection:** -
Not for motor type: REL	**Scaling:** p2003	**Expert list:** 1
Min	**Max**	**Factory setting**
-	-	0

Description: Sets the signal source for supplementary torque 1.

p1512[0...n] CI: Supplementary torque 1 scaling / M_suppl 1 scal

SERVO_S110-DP, SERVO_S110-CAN, SERVO_S110-PN

Can be changed: T	**Calculated:** -	**Access level:** 3
Data type: Unsigned32 / FloatingPoint32	**Dyn. index:** CDS, p0170	**Func. diagram:** 5060, 6060
P-Group: Closed-loop control	**Unit group:** -	**Unit selection:** -
Not for motor type: REL	**Scaling:** PERCENT	**Expert list:** 1
Min	**Max**	**Factory setting**
-	-	0

Description: Sets the signal source for scaling the supplementary torque 1.

p1513[0...n] CI: Supplementary torque 2 / M_suppl 2

SERVO_S110-DP, SERVO_S110-CAN, SERVO_S110-PN

Can be changed: T	**Calculated:** -	**Access level:** 3
Data type: Unsigned32 / FloatingPoint32	**Dyn. index:** CDS, p0170	**Func. diagram:** 5060, 6060
P-Group: Closed-loop control	**Unit group:** -	**Unit selection:** -
Not for motor type: REL	**Scaling:** p2003	**Expert list:** 1
Min	**Max**	**Factory setting**
-	-	0

Description: Sets the signal source for supplementary torque 2.

r1515 Supplementary torque total / M_suppl total

SERVO_S110-DP, SERVO_S110-CAN, SERVO_S110-PN

Can be changed: -	**Calculated:** -	**Access level:** 2
Data type: FloatingPoint32	**Dyn. index:** -	**Func. diagram:** 5040, 5060
P-Group: Closed-loop control	**Unit group:** 7_1	**Unit selection:** p0505
Not for motor type: REL	**Scaling:** p2003	**Expert list:** 1
Min	**Max**	**Factory setting**
- [Nm]	- [Nm]	- [Nm]

Description: Displays the total supplementary torque.
The displayed value is the total of supplementary torque values 1 and 2 (p1511, p1512, p1513, p1514).

p1517[0...n] Accelerating torque smoothing time constant / M_accel T_smooth

SERVO_S110-DP, SERVO_S110-CAN, SERVO_S110-PN

Can be changed: U, T	**Calculated:** -	**Access level:** 3
Data type: FloatingPoint32	**Dyn. index:** DDS, p0180	**Func. diagram:** 5042, 5210
P-Group: Closed-loop control	**Unit group:** -	**Unit selection:** -
Not for motor type: REL	**Scaling:** -	**Expert list:** 1
Min	**Max**	**Factory setting**
0.00 [ms]	100.00 [ms]	4.00 [ms]

Description: Sets the smoothing time constant of the accelerating torque.

Note: The parameter is only effective in encoderless operation.

r1518[0...1] CO: Accelerating torque / M_accel

SERVO_S110-DP, SERVO_S110-CAN, SERVO_S110-PN

Can be changed: -	**Calculated:** -	**Access level:** 3
Data type: FloatingPoint32	**Dyn. index:** -	**Func. diagram:** 5042, 5210
P-Group: Closed-loop control	**Unit group:** 7_1	**Unit selection:** p0505
Not for motor type: REL	**Scaling:** p2003	**Expert list:** 1
Min	**Max**	**Factory setting**
- [Nm]	- [Nm]	- [Nm]

Description: Displays the accelerating torque to pre-control the speed controller for torque-speed pre-control (p1402.4 = 1) or in encoderless operation.

Index: [0] = Unsmoothed
[1] = Smoothed

Dependency: Refer to: p0341, p0342, p1300, p1402, r1493, p1497, p1498

p1520[0...n] CO: Torque limit upper/motoring / M_max upper/mot

SERVO_S110-DP, SERVO_S110-CAN, SERVO_S110-PN

Can be changed: U, T	**Calculated:** CALC_MOD_LIM_REF	**Access level:** 2
Data type: FloatingPoint32	**Dyn. index:** DDS, p0180	**Func. diagram:** 5620, 5630
P-Group: Closed-loop control	**Unit group:** 7_1	**Unit selection:** p0505
Not for motor type: REL	**Scaling:** p2003	**Expert list:** 1
Min	**Max**	**Factory setting**
-1000000.00 [Nm]	20000000.00 [Nm]	0.00 [Nm]

Description: Sets the fixed upper torque limit or the torque limit when motoring.

Dependency: p1400.4 = 0: upper/lower
p1400.4 = 1: motoring / regenerating
Refer to: p0500, p1521, p1522, p1523, p1532, r1538, r1539

Danger: For p1400.4 = 0 (torque limiting, upper/lower) the following applies:

Negative values when setting the upper torque limit (p1520 < 0) can result in the motor accelerating in an uncontrollable fashion.

Notice: A BICO interconnection to a parameter that belongs to a drive data set always acts on the effective data set.

p1521[0...n] CO: Torque limit lower/regenerative / M_max lower/regen

SERVO_S110-DP, SERVO_S110-CAN, SERVO_S110-PN

Can be changed: U, T	**Calculated:** CALC_MOD_LIM_REF	**Access level:** 2
Data type: FloatingPoint32	**Dyn. index:** DDS, p0180	**Func. diagram:** 5620, 5630
P-Group: Closed-loop control	**Unit group:** 7_1	**Unit selection:** p0505
Not for motor type: REL	**Scaling:** p2003	**Expert list:** 1
Min	**Max**	**Factory setting**
-20000000.00 [Nm]	1000000.00 [Nm]	0.00 [Nm]

Description: Sets the fixed lower torque limit or the torque limit when regenerating.

Dependency: p1400.4 = 0: upper/lower
p1400.4 = 1: motoring / regenerating
Refer to: p0500, p1520, p1522, p1523, p1532

Danger: For p1400.4 = 0 (torque limiting, upper/lower) the following applies:

Positive values when setting the lower torque limit (p1521 > 0) can result in the motor accelerating in an uncontrollable fashion.

Notice: A BICO interconnection to a parameter that belongs to a drive data set always acts on the effective data set.

p1522[0...n] CI: Torque limit upper/motoring / M_max upper/mot

SERVO_S110-DP, SERVO_S110-CAN, SERVO_S110-PN

Can be changed: T	**Calculated:** -	**Access level:** 3
Data type: Unsigned32 / FloatingPoint32	**Dyn. index:** CDS, p0170	**Func. diagram:** 1610, 5620, 5630, 6630
P-Group: Closed-loop control	**Unit group:** -	**Unit selection:** -
Not for motor type: REL	**Scaling:** p2003	**Expert list:** 1
Min	**Max**	**Factory setting**
-	-	1520[0]

Description: Sets the signal source for the upper or torque/force limit when motoring.

Dependency: p1400.4 = 0: upper/lower

p1400.4 = 1: motoring / regenerating

Refer to: p1520, p1521, p1523, p1532

Danger: For p1400.4 = 0 (torque limiting, upper/lower) the following applies:

Negative values resulting from the signal source and scaling can cause the motor to accelerate in an uncontrolled manner.

p1523[0...n] CI: Torque limit lower/regenerative / M_max lower/regen

SERVO_S110-DP, SERVO_S110-CAN, SERVO_S110-PN

Can be changed: T	**Calculated:** -	**Access level:** 3
Data type: Unsigned32 / FloatingPoint32	**Dyn. index:** CDS, p0170	**Func. diagram:** 1610, 5620, 5630
P-Group: Closed-loop control	**Unit group:** -	**Unit selection:** -
Not for motor type: REL	**Scaling:** p2003	**Expert list:** 1
Min	**Max**	**Factory setting**
-	-	1521[0]

Description: Sets the signal source for the lower or torque/force limit when regenerating.

Dependency: p1400.4 = 0: upper/lower

p1400.4 = 1: motoring / regenerating

Refer to: p1520, p1521, p1522, p1532

Danger: For p1400.4 = 0 (torque limiting, upper/lower) the following applies:

Positive values resulting from the signal source and scaling can cause the motor to accelerate in an uncontrolled manner.

p1524[0...n] CO: Torque limit upper/motoring scaling / M_max up/mot scal

SERVO_S110-DP, SERVO_S110-CAN, SERVO_S110-PN

Can be changed: U, T	**Calculated:** -	**Access level:** 3
Data type: FloatingPoint32	**Dyn. index:** DDS, p0180	**Func. diagram:** 5620, 5630
P-Group: Closed-loop control	**Unit group:** -	**Unit selection:** -
Not for motor type: REL	**Scaling:** PERCENT	**Expert list:** 1
Min	**Max**	**Factory setting**
-2000.0 [%]	2000.0 [%]	100.0 [%]

Description: Sets the scaling for the upper torque limit or the torque limit when motoring.

Dependency: p1400.4 = 0: upper/lower

p1400.4 = 1: motoring / regenerating

Notice: A BICO interconnection to a parameter that belongs to a drive data set always acts on the effective data set.

Note: This parameter can be freely interconnected.

The value has the meaning stated above if it is interconnected from connector input p1528.

p1525[0...n] CO: Torque limit lower/regenerative scaling / M_max low/gen scal

SERVO_S110-DP, SERVO_S110-CAN, SERVO_S110-PN

Can be changed: U, T	**Calculated:** -	**Access level:** 3
Data type: FloatingPoint32	**Dyn. index:** DDS, p0180	**Func. diagram:** 5620, 5630
P-Group: Closed-loop control	**Unit group:** -	**Unit selection:** -
Not for motor type: REL	**Scaling:** PERCENT	**Expert list:** 1
Min	**Max**	**Factory setting**
-2000.0 [%]	2000.0 [%]	100.0 [%]

Description: Sets the scaling for the lower torque limit or the torque limit when regenerating.

Dependency: p1400.4 = 0: upper/lower
p1400.4 = 1: motoring / regenerating

Notice: A BICO interconnection to a parameter that belongs to a drive data set always acts on the effective data set.

Note: This parameter can be freely interconnected.
The value has the meaning stated above if it is interconnected from connector input p1528.

r1526 CO: Torque limit upper/motoring without offset / M_max up w/o offs

SERVO_S110-DP, SERVO_S110-CAN, SERVO_S110-PN

Can be changed: -	**Calculated:** -	**Access level:** 3
Data type: FloatingPoint32	**Dyn. index:** -	**Func. diagram:** 5620, 5630
P-Group: Closed-loop control	**Unit group:** 7_1	**Unit selection:** p0505
Not for motor type: REL	**Scaling:** p2003	**Expert list:** 1
Min	**Max**	**Factory setting**
- [Nm]	- [Nm]	- [Nm]

Description: Displays the upper torque limit of all torque limits without offset.

Dependency: p1400.4 = 0: upper/lower
p1400.4 = 1: motoring / regenerating
Refer to: p1520, p1521, p1522, p1523, p1528, p1529

r1527 CO: Torque limit lower/regenerative without offset / M_max low w/o offs

SERVO_S110-DP, SERVO_S110-CAN, SERVO_S110-PN

Can be changed: -	**Calculated:** -	**Access level:** 3
Data type: FloatingPoint32	**Dyn. index:** -	**Func. diagram:** 5620, 5630
P-Group: Closed-loop control	**Unit group:** 7_1	**Unit selection:** p0505
Not for motor type: REL	**Scaling:** p2003	**Expert list:** 1
Min	**Max**	**Factory setting**
- [Nm]	- [Nm]	- [Nm]

Description: Displays the lower torque limit of all torque limits without offset.

Dependency: p1400.4 = 0: upper/lower
p1400.4 = 1: motoring / regenerating
Refer to: p1520, p1521, p1522, p1523, p1528, p1529

p1528[0...n] CI: Torque limit upper/motoring scaling / M_max up/mot scal

SERVO_S110-DP, SERVO_S110-CAN, SERVO_S110-PN

Can be changed: T	**Calculated:** -	**Access level:** 3
Data type: Unsigned32 / FloatingPoint32	**Dyn. index:** CDS, p0170	**Func. diagram:** 1610, 3617, 5620, 5630
P-Group: Closed-loop control	**Unit group:** -	**Unit selection:** -
Not for motor type: REL	**Scaling:** PERCENT	**Expert list:** 1
Min	**Max**	**Factory setting**
-	-	1524[0]

Description: Sets the signal source for the scaling of the upper or motoring torque limit in p1522.

Dependency: p1400.4 = 0: upper/lower
p1400.4 = 1: motoring / regenerating

Danger: For p1400.4 = 0 (torque limiting, upper/lower) the following applies:
Negative values resulting from the signal source and scaling can cause the motor to accelerate in an uncontrolled manner.

Notice: The parameter may be protected as a result of p0922 or p2079 and cannot be changed.

p1529[0...n] CI: Torque limit lower/regenerative scaling / M_max low/gen scal

SERVO_S110-DP, SERVO_S110-CAN, SERVO_S110-PN

Can be changed: T	**Calculated:** -	**Access level:** 3
Data type: Unsigned32 / FloatingPoint32	**Dyn. index:** CDS, p0170	**Func. diagram:** 1610, 3617, 5620, 5630
P-Group: Closed-loop control	**Unit group:** -	**Unit selection:** -
Not for motor type: REL	**Scaling:** PERCENT	**Expert list:** 1
Min	**Max**	**Factory setting**
-	-	1525[0]

Description: Sets the signal source for the scaling of the lower torque limit or the regenerative torque limit in p1523.

Dependency: p1400.4 = 0: upper/lower

p1400.4 = 1: motoring / regenerating

Danger: For p1400.4 = 0 (torque limiting, upper/lower) the following applies:

Positive values resulting from the signal source and scaling can cause the motor to accelerate in an uncontrolled manner.

Notice: The parameter may be protected as a result of p0922 or p2079 and cannot be changed.

p1530[0...n] Power limit motoring / P_max mot

SERVO_S110-DP, SERVO_S110-CAN, SERVO_S110-PN

Can be changed: U, T	**Calculated:** CALC_MOD_LIM_REF	**Access level:** 2
Data type: FloatingPoint32	**Dyn. index:** DDS, p0180	**Func. diagram:** 5640
P-Group: Closed-loop control	**Unit group:** 14_5	**Unit selection:** p0505
Not for motor type: REL	**Scaling:** -	**Expert list:** 1
Min	**Max**	**Factory setting**
0.00 [kW]	100000.00 [kW]	0.00 [kW]

Description: Sets the power limit when motoring.

Dependency: Refer to: p0500, p1531

p1531[0...n] Power limit regenerative / P_max gen

SERVO_S110-DP, SERVO_S110-CAN, SERVO_S110-PN

Can be changed: U, T	**Calculated:** CALC_MOD_LIM_REF	**Access level:** 2
Data type: FloatingPoint32	**Dyn. index:** DDS, p0180	**Func. diagram:** 5640
P-Group: Closed-loop control	**Unit group:** 14_5	**Unit selection:** p0505
Not for motor type: REL	**Scaling:** -	**Expert list:** 1
Min	**Max**	**Factory setting**
-100000.00 [kW]	-0.01 [kW]	-0.01 [kW]

Description: Sets the regenerative power limit.

Dependency: Refer to: p0500, p1530

p1532[0...n] CO: Torque limit offset / M_max offset

SERVO_S110-DP, SERVO_S110-CAN, SERVO_S110-PN

Can be changed: U, T	**Calculated:** -	**Access level:** 3
Data type: FloatingPoint32	**Dyn. index:** DDS, p0180	**Func. diagram:** 5620, 5630, 5650, 7010, 8012
P-Group: Closed-loop control	**Unit group:** 7_1	**Unit selection:** p0505
Not for motor type: REL	**Scaling:** p2003	**Expert list:** 1
Min	**Max**	**Factory setting**
-100000.00 [Nm]	100000.00 [Nm]	0.00 [Nm]

Description: Sets the torque offset for the torque limit.

Dependency: Refer to: p1520, p1521, p1522, p1523, p1528, p1529

Notice: A BICO interconnection to a parameter that belongs to a drive data set always acts on the effective data set.

r1533 Current limit torque-generating total / Iq_max total

SERVO_S110-DP, SERVO_S110-CAN, SERVO_S110-PN

Can be changed: -	**Calculated:** -	**Access level:** 3
Data type: FloatingPoint32	**Dyn. index:** -	**Func. diagram:** 5640, 5722, 6640
P-Group: Displays, signals	**Unit group:** 6_2	**Unit selection:** p0505
Not for motor type: -	**Scaling:** p2002	**Expert list:** 1
Min	**Max**	**Factory setting**
- [Arms]	- [Arms]	- [Arms]

Description: Displays the maximum torque/force generating current as a result if all current limits.

r1534 CO: Torque limit upper total / M_max upper total

SERVO_S110-DP, SERVO_S110-CAN, SERVO_S110-PN

Can be changed: -	**Calculated:** -	**Access level:** 3
Data type: FloatingPoint32	**Dyn. index:** -	**Func. diagram:** 1610, 5620, 5630, 5640
P-Group: Closed-loop control	**Unit group:** 7_1	**Unit selection:** p0505
Not for motor type: REL	**Scaling:** p2003	**Expert list:** 1
Min	**Max**	**Factory setting**
- [Nm]	- [Nm]	- [Nm]

Description: Displays the upper torque limit of all torque limits.

Dependency: Refer to: p1520, p1521, p1522, p1523, p1528, p1529, p1532

r1535 CO: Torque limit lower total / M_max lower total

SERVO_S110-DP, SERVO_S110-CAN, SERVO_S110-PN

Can be changed: -	**Calculated:** -	**Access level:** 3
Data type: FloatingPoint32	**Dyn. index:** -	**Func. diagram:** 1610, 5620, 5630, 5640
P-Group: Closed-loop control	**Unit group:** 7_1	**Unit selection:** p0505
Not for motor type: REL	**Scaling:** p2003	**Expert list:** 1
Min	**Max**	**Factory setting**
- [Nm]	- [Nm]	- [Nm]

Description: Displays the lower torque limit of all torque limits.

Dependency: Refer to: p1520, p1521, p1522, p1523, p1528, p1529, p1532

r1538 CO: Upper effective torque limit / M_max upper eff

SERVO_S110-DP, SERVO_S110-CAN, SERVO_S110-PN

Can be changed: -	**Calculated:** -	**Access level:** 2
Data type: FloatingPoint32	**Dyn. index:** -	**Func. diagram:** 1590, 1610, 5610, 5650
P-Group: Closed-loop control	**Unit group:** 7_1	**Unit selection:** p0505
Not for motor type: REL	**Scaling:** p2003	**Expert list:** 1
Min	**Max**	**Factory setting**
- [Nm]	- [Nm]	- [Nm]

Description: Displays the currently effective upper torque limit.

Note: The effective upper torque limit is reduced with respect to the selected upper torque limit p1520, if the current limit p0640 is reduced or the rated magnetizing current of the induction motor p0320 is increased.

The torque limit p1520 can be re-calculated using p0340 = 1, 3 or 5.

r1539 CO: Lower effective torque limit / M_max lower eff

SERVO_S110-DP, SERVO_S110-CAN, SERVO_S110-PN

Can be changed: -	**Calculated:** -	**Access level:** 2
Data type: FloatingPoint32	**Dyn. index:** -	**Func. diagram:** 1590, 1610, 5610, 5650
P-Group: Closed-loop control	**Unit group:** 7_1	**Unit selection:** p0505
Not for motor type: REL	**Scaling:** p2003	**Expert list:** 1
Min	**Max**	**Factory setting**
- [Nm]	- [Nm]	- [Nm]

Description: Displays the currently effective lower torque limit.

Note: The effective lower torque limit is reduced with respect to the selected lower torque limit p1521, if the current limit p0640 is reduced or the rated magnetizing current of the induction motor p0320 is increased.

The torque limit p1520 can be re-calculated using p0340 = 1, 3 or 5.

p1542[0...n] CI: Travel to fixed stop torque reduction / TfS M_red

SERVO_S110-DP, SERVO_S110-CAN, SERVO_S110-PN

Can be changed: T	**Calculated:** -	**Access level:** 3
Data type: Unsigned32 / FloatingPoint32	**Dyn. index:** CDS, p0170	**Func. diagram:** 5610
P-Group: Closed-loop control	**Unit group:** -	**Unit selection:** -
Not for motor type: -	**Scaling:** PERCENT	**Expert list:** 1
Min	**Max**	**Factory setting**
-	-	0

Description: Sets the signal source for the torque/force reduction when traversing to a fixed stop. This value is converted into a factor and is interconnected to the scaling of the torque/force limits.

Dependency: Refer to: p1528, p1529, r1543, p1544, p1545

Notice: The parameter may be protected as a result of p0922 or p2079 and cannot be changed.

r1543 CO: Travel to fixed stop torque scaling / TfS M scal

SERVO_S110-DP, SERVO_S110-CAN, SERVO_S110-PN

Can be changed: -	**Calculated:** -	**Access level:** 3
Data type: FloatingPoint32	**Dyn. index:** -	**Func. diagram:** 5610
P-Group: Closed-loop control	**Unit group:** -	**Unit selection:** -
Not for motor type: -	**Scaling:** PERCENT	**Expert list:** 1
Min	**Max**	**Factory setting**
- [%]	- [%]	- [%]

Description: Displays the internally converted factor to interconnect to the scaling of the torque/force limits.

Dependency: Refer to: p1528, p1529, p1542, p1544, p1545

p1544 Travel to fixed stop evaluation torque reduction / TfS M_red eval

SERVO_S110-DP, SERVO_S110-CAN, SERVO_S110-PN

Can be changed: U, T	**Calculated:** -	**Access level:** 3
Data type: FloatingPoint32	**Dyn. index:** -	**Func. diagram:** 5610
P-Group: Closed-loop control	**Unit group:** -	**Unit selection:** -
Not for motor type: -	**Scaling:** -	**Expert list:** 1
Min	**Max**	**Factory setting**
0 [%]	65535 [%]	100 [%]

Description: Sets the evaluation for the torque/force reduction when traversing to a fixed stop.

Dependency: Refer to: p1528, p1529, p1542, r1543, p1545

Note: 4000 hex (16384 dec) in the MOMRED control word corresponds to a reduction by the percentage specified in this parameter.

p1545[0...n] BI: Activates travel to a fixed stop / TfS activation

SERVO_S110-DP, SERVO_S110-CAN, SERVO_S110-PN

Can be changed: T	**Calculated:** -	**Access level:** 3
Data type: Unsigned32 / Binary	**Dyn. index:** CDS, p0170	**Func. diagram:** 2520, 3617, 8012
P-Group: Commands	**Unit group:** -	**Unit selection:** -
Not for motor type: REL	**Scaling:** -	**Expert list:** 1
Min	**Max**	**Factory setting**
-	-	0

Description: Sets the signal source to activate/de-activate the "travel to fixed stop" function
1: Travel to fixed stop is active
0: Travel to fixed stop is inactive

Dependency: Refer to: p1542, r1543, p1544

Notice: The parameter may be protected as a result of p0922 or p2079 and cannot be changed.

p1546 Speed threshold motoring/regenerating / n_thresh mot/regen

SERVO_S110-DP, SERVO_S110-CAN, SERVO_S110-PN

Can be changed: U, T	**Calculated:** -	**Access level:** 2
Data type: FloatingPoint32	**Dyn. index:** -	**Func. diagram:** -
P-Group: Closed-loop control	**Unit group:** 3_1	**Unit selection:** p0505
Not for motor type: -	**Scaling:** -	**Expert list:** 1
Min	**Max**	**Factory setting**
0.00 [rpm]	210000.00 [rpm]	20.00 [rpm]

Description: Sets the speed threshold for the motoring/regenerative limit.
For speeds where the absolute value is less than p1546, then the following applies:
- For p1400.13 = 0: Motoring limit (speed threshold is compared to the speed actual value).
- For p1400.13 = 1: Regenerative limiting (speed threshold is compared to the speed setpoint).

r1549 CO: Stall power actual value / P_stall

SERVO_S110-DP, SERVO_S110-CAN, SERVO_S110-PN

Can be changed: -	**Calculated:** -	**Access level:** 3
Data type: FloatingPoint32	**Dyn. index:** -	**Func. diagram:** 5640
P-Group: Displays, signals	**Unit group:** 14_5	**Unit selection:** p0505
Not for motor type: -	**Scaling:** r2004	**Expert list:** 1
Min	**Max**	**Factory setting**
- [kW]	- [kW]	- [kW]

Description: Displays the instantaneous stall power.

Dependency: Refer to: p0326

Note: The stall power is influenced by p0326, p0353, p0354 and p0356.

p1550[0...n] BI: Transfer actual torque as torque offset / Accept act torque

SERVO_S110-DP, SERVO_S110-CAN, SERVO_S110-PN

Can be changed: T	**Calculated:** -	**Access level:** 2
Data type: Unsigned32 / Binary	**Dyn. index:** CDS, p0170	**Func. diagram:** -
P-Group: Closed-loop control	**Unit group:** -	**Unit selection:** -
Not for motor type: -	**Scaling:** -	**Expert list:** 1
Min	**Max**	**Factory setting**
-	-	9718.23

Description: For a positive edge, the actual torque (r0079[0]) at this instant in time is used instead of the torque offset from p1532 as long as p1550 remains at 1.

p1551[0...n] BI: Torque limit variable/fixed signal source / M_lim var/fixS_src

SERVO_S110-DP, SERVO_S110-CAN, SERVO_S110-PN

Can be changed: U, T	**Calculated:** -	**Access level:** 3
Data type: Unsigned32 / Binary	**Dyn. index:** CDS, p0170	**Func. diagram:** 5620, 5630, 6060, 6630
P-Group: Closed-loop control	**Unit group:** -	**Unit selection:** -
Not for motor type: REL	**Scaling:** -	**Expert list:** 1
Min	**Max**	**Factory setting**
-	-	1

Description: Sets the signal source to change over the torque limits between variable and fixed torque limit.
1 signal from BI: p1551:
The variable torque limit applies (fixed torque limit + scaling).
0 signal from BI: p1551:
The fixed torque limit applies.
Example:
In order that for a Quick Stop (OFF3) the fixed torque limit is effective, BI: p1551 must be interconnected to r0899.5.

p1552[0...n] CI: Torque limit upper scaling without offset / M_max up w/o offs

SERVO_S110-DP, SERVO_S110-CAN, SERVO_S110-PN

Can be changed: T	**Calculated:** -	**Access level:** 3
Data type: Unsigned32 / FloatingPoint32	**Dyn. index:** CDS, p0170	**Func. diagram:** 5060
P-Group: Closed-loop control	**Unit group:** -	**Unit selection:** -
Not for motor type: REL	**Scaling:** PERCENT	**Expert list:** 1
Min	**Max**	**Factory setting**
-	-	1

Description: Sets the signal source for the scaling of the upper torque limiting to limit the speed controller output without taking into account the current and power limits.

Notice: Speed controller limiting is only active if a BICO interconnection is set for connector input p1552 or p1554, (different than the factory setting).

p1554[0...n] CI: Torque limit lower scaling without offset / M_max low w/o offs

SERVO_S110-DP, SERVO_S110-CAN, SERVO_S110-PN

Can be changed: T	**Calculated:** -	**Access level:** 3
Data type: Unsigned32 / FloatingPoint32	**Dyn. index:** CDS, p0170	**Func. diagram:** 5060
P-Group: Closed-loop control	**Unit group:** -	**Unit selection:** -
Not for motor type: REL	**Scaling:** PERCENT	**Expert list:** 1
Min	**Max**	**Factory setting**
-	-	1

Description: Sets the signal source for the scaling of the lower torque limiting to limit the speed controller output without taking into account the current and power limits.

Notice: Speed controller limiting is only active if a BICO interconnection is set for connector input p1552 or p1554, (different than the factory setting).

p1569[0...n] CI: Supplementary torque 3 / M_suppl 3

SERVO_S110-DP, SERVO_S110-CAN, SERVO_S110-PN

Can be changed: T	**Calculated:** -	**Access level:** 2
Data type: Unsigned32 / FloatingPoint32	**Dyn. index:** CDS, p0170	**Func. diagram:** 7010
P-Group: Functions	**Unit group:** -	**Unit selection:** -
Not for motor type: REL	**Scaling:** p2003	**Expert list:** 1
Min	**Max**	**Factory setting**
-	-	0

Description: Sets the signal source for supplementary torque 3.

Notice: The signal input is after the torque limit (r1538, r1539).

p1578[0...n] Flux reduction flux decrease smoothing time / Flux red dec t_sm

SERVO_S110-DP, SERVO_S110-CAN, SERVO_S110-PN

Can be changed: U, T	**Calculated:** CALC_MOD_REG	**Access level:** 3
Data type: FloatingPoint32	**Dyn. index:** DDS, p0180	**Func. diagram:** 5722
P-Group: Closed-loop control	**Unit group:** -	**Unit selection:** -
Not for motor type: PMSM, REL, FEM	**Scaling:** -	**Expert list:** 1
Min	**Max**	**Factory setting**
20 [ms]	5000 [ms]	200 [ms]

Description: Sets the smoothing time for the flux setpoint when decreasing the flux due to flux reduction (p1581 < 100 %).

Dependency: Refer to: p1579, p1581

p1579[0...n] Flux reduction flux build-up smoothing time / Flux red up t_sm

SERVO_S110-DP, SERVO_S110-CAN, SERVO_S110-PN

Can be changed: U, T	**Calculated:** CALC_MOD_REG	**Access level:** 3
Data type: FloatingPoint32	**Dyn. index:** DDS, p0180	**Func. diagram:** 5722
P-Group: Closed-loop control	**Unit group:** -	**Unit selection:** -
Not for motor type: PMSM, REL, FEM	**Scaling:** -	**Expert list:** 1
Min	**Max**	**Factory setting**
0 [ms]	5000 [ms]	4 [ms]

Description: Sets the smoothing time for the flux setpoint for the flux build-up due to flux reduction (p1581 < 100 %).

Dependency: Refer to: p1578, p1581

Note: An excessively long smoothing time extends the time until the maximum torque is reached from the no-load phase.

p1581[0...n] Flux reduction factor / Flux red factor

SERVO_S110-DP, SERVO_S110-CAN, SERVO_S110-PN

Can be changed: U, T	**Calculated:** -	**Access level:** 2
Data type: FloatingPoint32	**Dyn. index:** DDS, p0180	**Func. diagram:** 5722
P-Group: Closed-loop control	**Unit group:** -	**Unit selection:** -
Not for motor type: PMSM, REL, FEM	**Scaling:** -	**Expert list:** 1
Min	**Max**	**Factory setting**
20 [%]	100 [%]	100 [%]

Description: Sets the factor to which the flux is reduced under no-load conditions.

For a value of 100%, the flux reduction is switched out.

This parameter refers to the flux saved in the field weakening characteristic.

By reducing the flux, the losses in induction motors can be reduced under no-load conditions or at low torques. However, the time it takes to reach the maximum torque is extended.

Recommendation: For induction motors with closed rotor slots, we recommend that the integral time of the current controller (p1717) is e.g. increased to three times the value.

For stable operation, the maximum field-weakening factor in operation with an encoder must be less than 16 and in operation without an encoder must be less than 4. Lower field weakening factors are recommended. The field weakening factor is calculated as follows:

(p1082 * 100 % * 600 V) / (p0348 * p1581 * p0070)

In order to reduce losses due to magnetizing and de-magnetizing, we recommend that the smoothing times are adapted for flux decrease (p1578) and flux build-up (p1579).

In order to reduce the losses as a result of building-up and reducing the torque, we recommend that the torque setpoint is smoothed (current setpoint filter (p1656 ...) or speed actual value filter (p1441)).

Dependency: Refer to: p1578, p1579

Note: It only makes sense to activate this function if there are low dynamic requirements placed on the speed controller and there are frequent phases with a low load.

In order to avoid oscillations, if required, the speed controller parameters should be adapted (decrease Kp (p1460, p1470), increase Tn (p1462, p1472)).

When used without an encoder, flux reduction is not possible for induction motors with closed rotor slots.

p1585[0...n] Flux actual value smoothing time / Flux actVal T_smth

SERVO_S110-DP, SERVO_S110-CAN, SERVO_S110-PN

Can be changed: U, T	**Calculated:** CALC_MOD_CON	**Access level:** 3
Data type: FloatingPoint32	**Dyn. index:** DDS, p0180	**Func. diagram:** -
P-Group: Closed-loop control	**Unit group:** -	**Unit selection:** -
Not for motor type: PMSM, REL	**Scaling:** -	**Expert list:** 1
Min	**Max**	**Factory setting**
0 [ms]	1000 [ms]	0 [ms]

Description: Sets the smoothing time for the flux actual value.

p1590[0...n] Flux controller P gain / Flux controller Kp

SERVO_S110-DP, SERVO_S110-CAN, SERVO_S110-PN

Can be changed: U, T	**Calculated:** CALC_MOD_CON	**Access level:** 3
Data type: FloatingPoint32	**Dyn. index:** DDS, p0180	**Func. diagram:** 5722
P-Group: Closed-loop control	**Unit group:** -	**Unit selection:** -
Not for motor type: PMSM, REL	**Scaling:** -	**Expert list:** 1
Min	**Max**	**Factory setting**
0.0 [A/Vs]	999999.0 [A/Vs]	10.0 [A/Vs]

Description: Sets the proportional gain for the flux controller.

Note: For synchronous motors, this parameters has no effect.
The value is automatically pre-assigned dependent on the motor when the drive system is first commissioned.
When calculating controller parameters (p0340 = 4), this value is re-calculated.

p1592[0...n] Flux controller integral time / Flux controller Tn

SERVO_S110-DP, SERVO_S110-CAN, SERVO_S110-PN

Can be changed: U, T	**Calculated:** CALC_MOD_CON	**Access level:** 3
Data type: FloatingPoint32	**Dyn. index:** DDS, p0180	**Func. diagram:** 5722
P-Group: Closed-loop control	**Unit group:** -	**Unit selection:** -
Not for motor type: PMSM, REL	**Scaling:** -	**Expert list:** 1
Min	**Max**	**Factory setting**
0 [ms]	10000 [ms]	30 [ms]

Description: Sets the integral time for the flux controller.

Note: For synchronous motors, this parameters has no effect.
The value is automatically pre-assigned dependent on the motor when the drive system is first commissioned.
When calculating controller parameters (p0340 = 4), this value is re-calculated.

p1612[0...n] Current setpoint open-loop control, encoderless / I_setCtrEncoderl

SERVO_S110-DP, SERVO_S110-CAN, SERVO_S110-PN

Can be changed: U, T	**Calculated:** CALC_MOD_REG	**Access level:** 2
Data type: FloatingPoint32	**Dyn. index:** DDS, p0180	**Func. diagram:** -
P-Group: Closed-loop control	**Unit group:** 6_2	**Unit selection:** p0505
Not for motor type: -	**Scaling:** -	**Expert list:** 1
Min	**Max**	**Factory setting**
0.00 [Arms]	10000.00 [Arms]	0.00 [Arms]

Description: Sets the current setpoint for controlled (open-loop) encoderless operation.

Note: The value is effective at speeds less than p1755 and represents a reserve for a possibly existing load torque or torque error in the moment of inertia.

r1650 Current setpoint torque-generating before filter / Iq_set before filt

SERVO_S110-DP, SERVO_S110-CAN, SERVO_S110-PN

Can be changed: -	**Calculated:** -	**Access level:** 3
Data type: FloatingPoint32	**Dyn. index:** -	**Func. diagram:** 5710
P-Group: Closed-loop control	**Unit group:** 6_2	**Unit selection:** p0505
Not for motor type: REL	**Scaling:** p2002	**Expert list:** 1
Min	**Max**	**Factory setting**
- [Arms]	- [Arms]	- [Arms]

Description: Displays the torque generating current setpoint Iqset after the torque limits and the clock cycle interpolation is ahead of the current setpoint filters.

r1651 CO: Torque setpoint function generator / M_set FG

SERVO_S110-DP, SERVO_S110-CAN, SERVO_S110-PN

Can be changed: -	**Calculated:** -	**Access level:** 3
Data type: FloatingPoint32	**Dyn. index:** -	**Func. diagram:** -
P-Group: Closed-loop control	**Unit group:** 7_1	**Unit selection:** p0505
Not for motor type: REL	**Scaling:** p2003	**Expert list:** 1
Min	**Max**	**Factory setting**
- [Nm]	- [Nm]	- [Nm]

Description: Displays the torque setpoint of the function generator.

p1656[0...n] Activates current setpoint filter / I_setp_filt act

SERVO_S110-DP, SERVO_S110-CAN, SERVO_S110-PN

Can be changed: U, T	**Calculated:** CALC_MOD_CON	**Access level:** 3
Data type: Unsigned16	**Dyn. index:** DDS, p0180	**Func. diagram:** 5710
P-Group: Closed-loop control	**Unit group:** -	**Unit selection:** -
Not for motor type: -	**Scaling:** -	**Expert list:** 1
Min	**Max**	**Factory setting**
-	-	0001 bin

Description: Setting for activating/de-activating the current setpoint filter.

Bit field:

Bit	Signal name	1 signal	0 signal	FP
00	Filter 1	Active	Inactive	-
01	Filter 2	Active	Inactive	-

Dependency: The individual current setpoint filters are parameterized as of p1657.

Note: If not all of the filters are required, then the filters should be used consecutively starting from filter 1.

p1657[0...n] Current setpoint filter 1 type / I_set_filt 1 type

SERVO_S110-DP, SERVO_S110-CAN, SERVO_S110-PN

Can be changed: U, T	**Calculated:** CALC_MOD_CON	**Access level:** 3
Data type: Integer16	**Dyn. index:** DDS, p0180	**Func. diagram:** 5710, 6710
P-Group: Closed-loop control	**Unit group:** -	**Unit selection:** -
Not for motor type: REL	**Scaling:** -	**Expert list:** 1
Min	**Max**	**Factory setting**
1	2	1

Description: Sets the current setpoint filter 1 as low pass (PT2) or as extended general 2nd-order filter.

Value:
1: Low pass: PT2
2: General 2nd order filter

Dependency: Current setpoint filter 1 is activated via p1656.0 and parameterized via p1657 ... p1661.

Note: For an extended general 2nd-order filter, by inserting the same natural frequency in both the numerator and in the denominator, i.e. bandstop frequency, a bandstop filter is implemented. If the numerator damping of zero is selected, the bandstop frequency is completely suppressed.

The denominator damping can be determined from the equation for the 3 dB bandwidth:

f_3dB bandwidth = 2 * D_denominator * f_bandstop frequency

p1658[0...n] Current setpoint filter 1 denominator natural frequency / l_set_filt 1 fn_d

SERVO_S110-DP, SERVO_S110-CAN, SERVO_S110-PN

Can be changed: U, T	**Calculated:** CALC_MOD_CON	**Access level:** 3
Data type: FloatingPoint32	**Dyn. index:** DDS, p0180	**Func. diagram:** 5710, 6710
P-Group: Closed-loop control	**Unit group:** -	**Unit selection:** -
Not for motor type: REL	**Scaling:** -	**Expert list:** 1
Min	**Max**	**Factory setting**
0.5 [Hz]	16000.0 [Hz]	1999.0 [Hz]

Description: Sets the denominator natural frequency for current setpoint filter 1 (PT2, general filter).

Dependency: Current setpoint filter 1 is activated via p1656.0 and parameterized via p1657 ... p1661.

p1659[0...n] Current setpoint filter 1 denominator damping / l_set_filt 1 D_d

SERVO_S110-DP, SERVO_S110-CAN, SERVO_S110-PN

Can be changed: U, T	**Calculated:** CALC_MOD_CON	**Access level:** 3
Data type: FloatingPoint32	**Dyn. index:** DDS, p0180	**Func. diagram:** 5710, 6710
P-Group: Closed-loop control	**Unit group:** -	**Unit selection:** -
Not for motor type: REL	**Scaling:** -	**Expert list:** 1
Min	**Max**	**Factory setting**
0.001	10.000	0.700

Description: Sets the denominator damping for current setpoint filter 1.

Dependency: Current setpoint filter 1 is activated via p1656.0 and parameterized via p1657 ... p1661.

p1660[0...n] Current setpoint filter 1 numerator natural frequency / l_set_filt 1 fn_n

SERVO_S110-DP, SERVO_S110-CAN, SERVO_S110-PN

Can be changed: U, T	**Calculated:** -	**Access level:** 3
Data type: FloatingPoint32	**Dyn. index:** DDS, p0180	**Func. diagram:** 5710, 6710
P-Group: Closed-loop control	**Unit group:** -	**Unit selection:** -
Not for motor type: REL	**Scaling:** -	**Expert list:** 1
Min	**Max**	**Factory setting**
0.5 [Hz]	16000.0 [Hz]	1999.0 [Hz]

Description: Sets the numerator natural frequency for current setpoint filter 1 (general filter).

Dependency: Current setpoint filter 1 is activated via p1656.0 and parameterized via p1657 ... p1661.

p1661[0...n] Current setpoint filter 1 numerator damping / l_set_filt 1 D_n

SERVO_S110-DP, SERVO_S110-CAN, SERVO_S110-PN

Can be changed: U, T	**Calculated:** -	**Access level:** 3
Data type: FloatingPoint32	**Dyn. index:** DDS, p0180	**Func. diagram:** 5710, 6710
P-Group: Closed-loop control	**Unit group:** -	**Unit selection:** -
Not for motor type: REL	**Scaling:** -	**Expert list:** 1
Min	**Max**	**Factory setting**
0.000	10.000	0.700

Description: Sets the numerator damping for current setpoint filter 1.

Dependency: Current setpoint filter 1 is activated via p1656.0 and parameterized via p1657 ... p1661.

p1662[0...n] Current setpoint filter 2 type / l_set_filt 2 type

SERVO_S110-DP, SERVO_S110-CAN, SERVO_S110-PN

Can be changed: U, T	**Calculated:** -	**Access level:** 3
Data type: Integer16	**Dyn. index:** DDS, p0180	**Func. diagram:** 5710, 6710
P-Group: Closed-loop control	**Unit group:** -	**Unit selection:** -
Not for motor type: REL	**Scaling:** -	**Expert list:** 1
Min	**Max**	**Factory setting**
1	2	1

Description: Sets the current setpoint filter 2 as low pass (PT2) or as extended general 2nd-order filter.

Value:
1: Low pass: PT2
2: General 2nd order filter

Dependency: Current setpoint filter 2 is activated via p1656.1 and parameterized via p1662 ... p1666.

Note: For an extended general 2nd-order filter, by inserting the same natural frequency in both the numerator and in the denominator, i.e. bandstop frequency, a bandstop filter is implemented. If the numerator damping of zero is selected, the bandstop frequency is completely suppressed.

The denominator damping can be determined from the equation for the 3 dB bandwidth:

f_3dB bandwidth = 2 * D_denominator * f_bandstop frequency

p1663[0...n] Current setpoint filter 2 denominator natural frequency / I_set_filt 2 fn_d

SERVO_S110-DP, SERVO_S110-CAN, SERVO_S110-PN

Can be changed: U, T	**Calculated:** -	**Access level:** 3
Data type: FloatingPoint32	**Dyn. index:** DDS, p0180	**Func. diagram:** 5710, 6710
P-Group: Closed-loop control	**Unit group:** -	**Unit selection:** -
Not for motor type: REL	**Scaling:** -	**Expert list:** 1
Min	**Max**	**Factory setting**
0.5 [Hz]	16000.0 [Hz]	1999.0 [Hz]

Description: Sets the denominator natural frequency for current setpoint filter 2 (PT2, general filter).

Dependency: Current setpoint filter 2 is activated via p1656.1 and parameterized via p1662 ... p1666.

p1664[0...n] Current setpoint filter 2 denominator damping / I_set_filt 2 D_d

SERVO_S110-DP, SERVO_S110-CAN, SERVO_S110-PN

Can be changed: U, T	**Calculated:** -	**Access level:** 3
Data type: FloatingPoint32	**Dyn. index:** DDS, p0180	**Func. diagram:** 5710, 6710
P-Group: Closed-loop control	**Unit group:** -	**Unit selection:** -
Not for motor type: REL	**Scaling:** -	**Expert list:** 1
Min	**Max**	**Factory setting**
0.001	10.000	0.700

Description: Sets the denominator damping for current setpoint filter 2.

Dependency: Current setpoint filter 2 is activated via p1656.1 and parameterized via p1662 ... p1666.

p1665[0...n] Current setpoint filter 2 numerator natural frequency / I_set_filt 2 fn_n

SERVO_S110-DP, SERVO_S110-CAN, SERVO_S110-PN

Can be changed: U, T	**Calculated:** -	**Access level:** 3
Data type: FloatingPoint32	**Dyn. index:** DDS, p0180	**Func. diagram:** 5710, 6710
P-Group: Closed-loop control	**Unit group:** -	**Unit selection:** -
Not for motor type: REL	**Scaling:** -	**Expert list:** 1
Min	**Max**	**Factory setting**
0.5 [Hz]	16000.0 [Hz]	1999.0 [Hz]

Description: Sets the numerator natural frequency for current setpoint filter 2 (general filter).

Dependency: Current setpoint filter 2 is activated via p1656.1 and parameterized via p1662 ... p1666.

p1666[0...n] Current setpoint filter 2 numerator damping / I_set_filt 2 D_n

SERVO_S110-DP, SERVO_S110-CAN, SERVO_S110-PN

Can be changed: U, T	**Calculated:** -	**Access level:** 3
Data type: FloatingPoint32	**Dyn. index:** DDS, p0180	**Func. diagram:** 5710, 6710
P-Group: Closed-loop control	**Unit group:** -	**Unit selection:** -
Not for motor type: REL	**Scaling:** -	**Expert list:** 1
Min	**Max**	**Factory setting**
0.000	10.000	0.700

Description: Sets the numerator damping for current setpoint filter 2.

Dependency: Current setpoint filter 2 is activated via p1656.1 and parameterized via p1662 ... p1666.

p1699 Filter data acceptance / Filt data accept

SERVO_S110-DP, SERVO_S110-CAN, SERVO_S110-PN

Can be changed: U, T	**Calculated:** -	**Access level:** 3
Data type: Integer16	**Dyn. index:** -	**Func. diagram:** -
P-Group: Closed-loop control	**Unit group:** -	**Unit selection:** -
Not for motor type: REL	**Scaling:** -	**Expert list:** 1
Min	**Max**	**Factory setting**
0	1	0

Description: Activates data acceptance for parameter changes for the filter.
p1699 = 0:
The new filter data are immediately accepted.
p1699 = 1:
The new filter data are only accepted when this parameter is reset.

Dependency: Refer to: p1414, p1415, p1416, p1417, p1418, p1419, p1420, p1656, p1657, p1658, p1659, p1660, p1661, p1662, p1663, p1664, p1665, p1666

p1701[0...n] Current controller reference model dead time / I_ctrRefMod t_dead

SERVO_S110-DP, SERVO_S110-CAN, SERVO_S110-PN

Can be changed: U, T	**Calculated:** -	**Access level:** 3
Data type: FloatingPoint32	**Dyn. index:** DDS, p0180	**Func. diagram:** 5714
P-Group: Closed-loop control	**Unit group:** -	**Unit selection:** -
Not for motor type: -	**Scaling:** -	**Expert list:** 1
Min	**Max**	**Factory setting**
0.0	1.0	1.0

Description: Sets the fractional dead time for the current controller reference model.
This parameter emulates the computing dead time of the proportionally controlled current control loop.

Note: Dead time = p1701 * p0115[0]

p1715[0...n] Current controller P gain / I_ctrl Kp

SERVO_S110-DP, SERVO_S110-CAN, SERVO_S110-PN

Can be changed: U, T	**Calculated:** CALC_MOD_CON	**Access level:** 3
Data type: FloatingPoint32	**Dyn. index:** DDS, p0180	**Func. diagram:** 5714, 7017
P-Group: Closed-loop control	**Unit group:** 18_1	**Unit selection:** p0505
Not for motor type: REL	**Scaling:** -	**Expert list:** 1
Min	**Max**	**Factory setting**
0.000 [V/A]	100000.000 [V/A]	0.000 [V/A]

Description: Sets the proportional gain of the current controller for the lower adaptation current range.
This value is automatically pre-set using p3900 or p0340 when commissioning has been completed.

Dependency: Refer to: p0391, p0392, p0393

Note: For p0393 = 100 %, the current controller adaptation is disabled and p1715 is effective over the entire range.

p1717[0...n] Current controller integral-action time / I_ctrl Tn

SERVO_S110-DP, SERVO_S110-CAN, SERVO_S110-PN

Can be changed: U, T	**Calculated:** CALC_MOD_CON	**Access level:** 3
Data type: FloatingPoint32	**Dyn. index:** DDS, p0180	**Func. diagram:** 1710, 5714, 6714, 7017
P-Group: Closed-loop control	**Unit group:** -	**Unit selection:** -
Not for motor type: REL	**Scaling:** -	**Expert list:** 1
Min	**Max**	**Factory setting**
0.00 [ms]	1000.00 [ms]	2.00 [ms]

Description: Sets the integral-action time of the current controller.

Dependency: Refer to: p1715

r1732 CO: Direct-axis voltage setpoint / Direct U set

SERVO_S110-DP, SERVO_S110-CAN, SERVO_S110-PN

Can be changed: -	**Calculated:** -	**Access level:** 3
Data type: FloatingPoint32	**Dyn. index:** -	**Func. diagram:** 1630, 5714, 6714, 5718
P-Group: Closed-loop control	**Unit group:** 5_1	**Unit selection:** p0505
Not for motor type: REL	**Scaling:** p2001	**Expert list:** 1
Min	**Max**	**Factory setting**
- [Vrms]	- [Vrms]	- [Vrms]

Description: Displays the direct-axis voltage setpoint Ud.

r1733 CO: Quadrature-axis voltage setpoint / Quad U set

SERVO_S110-DP, SERVO_S110-CAN, SERVO_S110-PN

Can be changed: -	**Calculated:** -	**Access level:** 3
Data type: FloatingPoint32	**Dyn. index:** -	**Func. diagram:** 1630, 5714, 5718, 6714, 6719
P-Group: Closed-loop control	**Unit group:** 5_1	**Unit selection:** p0505
Not for motor type: REL	**Scaling:** p2001	**Expert list:** 1
Min	**Max**	**Factory setting**
- [Vrms]	- [Vrms]	- [Vrms]

Description: Displays the quadrature-axis component of voltage setpoint Uq.

p1752[0...n] Motor model changeover speed operation with encoder / MotMod n_chgov enc

SERVO_S110-DP, SERVO_S110-CAN, SERVO_S110-PN

Can be changed: U, T	**Calculated:** CALC_MOD_REG	**Access level:** 3
Data type: FloatingPoint32	**Dyn. index:** DDS, p0180	**Func. diagram:** -
P-Group: Closed-loop control	**Unit group:** 3_1	**Unit selection:** p0505
Not for motor type: REL	**Scaling:** -	**Expert list:** 1
Min	**Max**	**Factory setting**
0.00 [rpm]	210000.00 [rpm]	210000.00 [rpm]

Description: Sets the speed to change over the motor model for operation with encoder.

Dependency: Refer to: p1756

Note: Induction motor (ASM):
The motor model is influenced for speeds/velocities greater than p1752.
Synchronous motor (SRM):
A monitoring (F07412) is activated for speeds/velocities greater than p1752.
The motor model is additionally influenced when kT adaptation is activated (p1780.3 = 1).

p1755[0...n] Motor model changeover speed encoderless operation / MotMod n_chgSnsorl

SERVO_S110-DP, SERVO_S110-CAN, SERVO_S110-PN

Can be changed: U, T	**Calculated:** CALC_MOD_REG	**Access level:** 3
Data type: FloatingPoint32	**Dyn. index:** DDS, p0180	**Func. diagram:** -
P-Group: Closed-loop control	**Unit group:** 3_1	**Unit selection:** p0505
Not for motor type: REL	**Scaling:** -	**Expert list:** 1
Min	**Max**	**Factory setting**
0.00 [rpm]	210000.00 [rpm]	210000.00 [rpm]

Description: Sets the speed to change over the motor model to encoderless operation.

Dependency: Refer to: p1756

Note: The changeover speed applies for the changeover between open-loop and closed-loop control mode.

p1756 Motor model changeover speed hysteresis / MotMod n_chgov hys

SERVO_S110-DP, SERVO_S110-CAN, SERVO_S110-PN

Can be changed: U, T	**Calculated:** CALC_MOD_CON	**Access level:** 3
Data type: FloatingPoint32	**Dyn. index:** -	**Func. diagram:** -
P-Group: Closed-loop control	**Unit group:** -	**Unit selection:** -
Not for motor type: REL	**Scaling:** -	**Expert list:** 1
Min	**Max**	**Factory setting**
0.0 [%]	90.0 [%]	5.0 [%]

Description: Sets the hysteresis for the changeover speed/velocity of the motor model.

Dependency: Refer to: p1752, p1755

Note: The value is entered relative to p1404, p1752 or p1755.

r1778 Motor model flux angle difference / MotMod ang diff

SERVO_S110-DP, SERVO_S110-CAN, SERVO_S110-PN

Can be changed: -	**Calculated:** -	**Access level:** 3
Data type: FloatingPoint32	**Dyn. index:** -	**Func. diagram:** -
P-Group: Closed-loop control	**Unit group:** -	**Unit selection:** -
Not for motor type: REL	**Scaling:** p2005	**Expert list:** 1
Min	**Max**	**Factory setting**
- [°]	- [°]	- [°]

Description: Induction motor (ASM):
Displays the difference between the motor model flux angle and the transformation angle.
Permanent-magnet synchronous motor (PESM):
Displays the angular difference between motor model and encoder.

Dependency: A setting for smoothing the display can be made using p1754.

Notice: The display only makes sense for corrected actual value inversion, encoder pulse number and pole pair number.
Example:
Moving in encoderless operation at a speed not equal to zero and without load.
--> Check the sign of r0061 and r0063. If the sign is not equal, then change p0410.0.
--> Check the stationary value of r0061 and r0063. If the value is not equal, change the encoder pulse number (p0408) or pole pair number (p0314).

p1800[0...n] Pulse frequency setpoint / Pulse freq setp

SERVO_S110-DP, SERVO_S110-CAN, SERVO_S110-PN

Can be changed: U, T	**Calculated:** CALC_MOD_ALL	**Access level:** 2
Data type: FloatingPoint32	**Dyn. index:** DDS, p0180	**Func. diagram:** -
P-Group: Modulation	**Unit group:** -	**Unit selection:** -
Not for motor type: -	**Scaling:** -	**Expert list:** 1
Min	**Max**	**Factory setting**
1.000 [kHz]	32.000 [kHz]	4.000 [kHz]

Description: Sets the pulse frequency for the converter.
This parameter is pre-set to the rated converter value when the drive is first commissioned.

Dependency: The pulse frequency can, depending on the current controller sampling time (p0115[0]) assume the following values:
a) p1800 = 1000 / (p0115[0] * n) with n = 2, 3, 4, 5
b) p1800 = 1000 * n / p0115[0] with n = 1, 2, 3, 4, ...
Example:
p0115[0] = 125 µs -> p1800 = 1.6, 2, 2.6, 4 kHz (from equation a)
p0115[0] = 125 µs -> p1800 = 8, 16 kHz (from equation b)
Possible setting values can be taken from r0114 (if p0009 = p0010 = 0).
Refer to: p0115

Note: The maximum possible pulse frequency is also determined by the power unit being used.
When the pulse frequency is increased, depending on the particular power unit, the maximum output current can be reduced (derating, refer to r0067).
If p1800 is changed while commissioning (p0009, p0010 > 0), then it is possible that the old value will no longer be able to be set. The reason for this is that the dynamic limits of p1800 have been changed by a parameter that was set when the drive was commissioned (e.g. p1082).

For encoderless operation (p1404 = 0 or p1300 = 20), the following conditions apply:
p1800 = 1 / (2 * p0115[0])
or
p1800 >= n / p0115[0], n = 1, 2, ...
For motors with a low power rating (< 300 W) we recommend that p1800 is set acc. to the second condition.

p1810 Modulator configuration / Modulator config

SERVO_S110-DP, SERVO_S110-CAN, SERVO_S110-PN

Can be changed: T	**Calculated:** -	**Access level:** 3
Data type: Unsigned16	**Dyn. index:** -	**Func. diagram:** -
P-Group: Modulation	**Unit group:** -	**Unit selection:** -
Not for motor type: -	**Scaling:** -	**Expert list:** 1
Min	**Max**	**Factory setting**
-	-	0000 0000 0000 0000 bin

Description: Sets the configuration for the modulator.

Bit field:

Bit	Signal name	1 signal	0 signal	FP
11	Current controller dynamics higher	Yes	No	-

Note:
Re bit 11:
Precondition:
- firmware version 4.4 or higher for the Control Unit and power unit.
- booksize power unit (r0192.27 = 1).
- current controller sampling time p0115[0} >= 62.5 µs.
- for a Double Motor Module the two drive controls must be operated with the same current controller sampling time (p0115[0]). Otherwise, the higher current controller dynamics can only be activated on the drive with the longer sampling time.
- it is not permissible that the "safety without encoder" is activated (p9306/p9506).

The following changes are necessary after changing bit 11:
- computing dead time (p0118 = 22 µs for bit 11 = 1, p0118 = 0 µs for bit 11 = 0).
- controller gains (p1715, p1460).
- with p0340 = 4 computing dead time and controller gains can be automatically pre-assigned. It may be necessary to still optimize the speed controller.

Before commissioning for the first time (p3925.0 = 0 for all data sets) this parameter is automatically preassigned to the optimum value.

p1818 Phase for PWM generation configuration / Ph for PWM config

CU_S110-DP, CU_S110-CAN, CU_S110-PN

Can be changed: T	**Calculated:** -	**Access level:** 3
Data type: Integer16	**Dyn. index:** -	**Func. diagram:** -
P-Group: Modulation	**Unit group:** -	**Unit selection:** -
Not for motor type: -	**Scaling:** -	**Expert list:** 1
Min	**Max**	**Factory setting**
0	1	1

Description: Sets the phase shift for offset clocking.
For the first active power unit, it is specified whether clocking is to start at 0° (value = 0) or 180° (value = 1). All other active power units are clocked alternately according to the setting made here.

Note: A change only becomes effective after a POWER ON.
The parameter is not influenced by setting the factory setting.

p1821[0...n] Dir of rot / Dir of rot

SERVO_S110-DP, SERVO_S110-CAN, SERVO_S110-PN

Can be changed: C2(3)	**Calculated:** -	**Access level:** 3
Data type: Integer16	**Dyn. index:** DDS, p0180	**Func. diagram:** 1580, 4704, 4710, 5730
P-Group: Motor	**Unit group:** -	**Unit selection:** -
Not for motor type: -	**Scaling:** -	**Expert list:** 1
Min	**Max**	**Factory setting**
0	1	0

Description: Setting to change the direction of rotation.

If the parameter is changed, it reverses the direction of rotation of the motor and the encoder actual value without changing the setpoint.

Value:
0: CW
1: CCW

Dependency: Refer to: F07434

Notice: An appropriate fault is output for a drive data set changeover where the direction of rotation changes and the pulses are enabled.

Note: For operation with the phase sequence U/V/W, the direction of rotation is defined when viewing the face side of the motor output shaft.

When changing the direction of rotation, the rotating field direction of the current controller is reversed. The speed actual value (e.g. r0063) is also reversed so that the control sense is kept and internally causing the direction of rotation to be reversed with the same setpoint. Further, the position actual values of the actual encoder are reversed (e.g. r0482[0...2]).

p1909[0...n] Motor data identification control word / MotID STW

SERVO_S110-DP, SERVO_S110-CAN, SERVO_S110-PN

Can be changed: T	**Calculated:** CALC_MOD_ALL	**Access level:** 3
Data type: Unsigned16	**Dyn. index:** MDS, p0130	**Func. diagram:** -
P-Group: Motor identification	**Unit group:** -	**Unit selection:** -
Not for motor type: -	**Scaling:** -	**Expert list:** 1
Min	**Max**	**Factory setting**
-	-	0010 0111 0000 0000 bin

Description: Sets the configuration for the motor data identification.

Recommendation: For the stationary motor data identification, if a motor holding brake is being used it should be opened and the motor finely synchronized before the measurement. This should only be done if it can be safely carried out and no external forces can act on the motor. This determines the angular commutation offset (p1909.13, p0431).

Bit field:

Bit	Signal name	1 signal	0 signal	FP
08	Measure D inductance	Yes	No	-
09	Measure Q inductance	Yes	No	-
10	Magnetizing field inductance and measure rotor resistance	Yes	No	-
13	Measure commutation angle and direction of rotation	Yes	No	-
14	Determining the voltage emulation error	Yes	No	-

Dependency: Refer to: p1910, r1912, r1913, r1915, r1925, r1927, r1932, r1933, r1934, r1935, r1936, r1950, r1951

Note: For an induction motor (ASM) the following bits: 8, 9, 10, 13 are effective

For a synchronous motor (SRM) the following bits: 8, 9, 13, 14 are effective

Re bit 14:

- after successfully determining the voltage emulation error, the display of the phase voltage actual values r0089 and the active power actual value r0082 and the torque actual value r0080 are significantly more accurate.

- the voltage emulation errors should be identified with the Motor Module in the warm state.

- the motor temperature (r0035) should not change significantly (i.e. it should not be identified immediately after a load duty cycle).

p1910 Motor data identification routine stationary (standstill) / MotID standstill

SERVO_S110-DP, SERVO_S110-CAN, SERVO_S110-PN

Can be changed: T	**Calculated:** -	**Access level:** 2
Data type: Integer16	**Dyn. index:** -	**Func. diagram:** -
P-Group: Motor identification	**Unit group:** -	**Unit selection:** -
Not for motor type: -	**Scaling:** -	**Expert list:** 1
Min	**Max**	**Factory setting**
-3	1	0

Description: Setting to control the motor data identification with the motor stationary.

Value:
-3: Accept identified parameters
-2: Acknowledge encoder inversion actual value (F07993)
-1: Start motor data identification without acceptance
0: Inactive/inhibit
1: Start motor data identification with acceptance

Recommendation: For motors with brakes, the brake should be opened before carrying out the stationary motor data identification routine (p1215 = 2) as long as this can be done without incurring any danger. The commutation angle and the direction of rotation are also determined.

Dependency: Refer to: p1909, r1912, r1913, r1915, r1925, r1927, r1932, r1933, r1934, r1935, r1936, r1950, r1951
Refer to: F07990, A07991, F07993

Caution: For motors without brake or with the brake open (p1215 = 2), for the stationary (zero speed) measurement, the motor may rotate slightly.

Notice: If there is a motor holding brake, it must be open (p1215 = 2).
To permanently accept the determined settings they must be saved in a non-volatile fashion (p0971, p0977).

Note: Motor data identification can only be selected when the pulses of all of the drive objects of the Control Unit have been suppressed. After selection, all of the other drive objects of the Control Unit are interlocked so that they cannot be powered up until the motor data identification has been completed or de-selected.
After a started motor identification is ended, the parameter is automatically reset to 0.
A motor data identification that is presently being carried out can be terminated with p1910 = 0.

r1912 Stator resistance identified / R_stator ident

SERVO_S110-DP, SERVO_S110-CAN, SERVO_S110-PN

Can be changed: -	**Calculated:** -	**Access level:** 3
Data type: FloatingPoint32	**Dyn. index:** -	**Func. diagram:** -
P-Group: Motor identification	**Unit group:** -	**Unit selection:** -
Not for motor type: -	**Scaling:** -	**Expert list:** 1
Min	**Max**	**Factory setting**
- [ohm]	- [ohm]	- [ohm]

Description: Displays the identified stator resistance.

Dependency: Refer to: p1909, p1910, r1913, r1915, r1925, r1927, r1932, r1933, r1934, r1935, r1936, r1950, r1951

r1913 Rotor time constant identified / T_rotor ident

SERVO_S110-DP, SERVO_S110-CAN, SERVO_S110-PN

Can be changed: -	**Calculated:** -	**Access level:** 3
Data type: FloatingPoint32	**Dyn. index:** -	**Func. diagram:** -
P-Group: Motor identification	**Unit group:** -	**Unit selection:** -
Not for motor type: PMSM	**Scaling:** -	**Expert list:** 1
Min	**Max**	**Factory setting**
- [ms]	- [ms]	- [ms]

Description: Displays the identified rotor time constant.

Dependency: Refer to: p1909, p1910, r1912, r1915, r1925, r1927, r1932, r1933, r1934, r1935, r1936, r1950, r1951

r1915 Stator inductance identified / L_stator ident

SERVO_S110-DP, SERVO_S110-CAN, SERVO_S110-PN

Can be changed: -	**Calculated:** -	**Access level:** 3
Data type: FloatingPoint32	**Dyn. index:** -	**Func. diagram:** -
P-Group: Motor identification	**Unit group:** -	**Unit selection:** -
Not for motor type: -	**Scaling:** -	**Expert list:** 1
Min	**Max**	**Factory setting**
- [mH]	- [mH]	- [mH]

Description: Displays the identified stator inductance.

Dependency: Refer to: p1909, p1910, r1912, r1913, r1925, r1927, r1932, r1933, r1934, r1935, r1936, r1950, r1951

r1925 Threshold voltage identified / U_threshold ident

SERVO_S110-DP, SERVO_S110-CAN, SERVO_S110-PN

Can be changed: -	**Calculated:** -	**Access level:** 4
Data type: FloatingPoint32	**Dyn. index:** -	**Func. diagram:** -
P-Group: Motor identification	**Unit group:** -	**Unit selection:** -
Not for motor type: -	**Scaling:** -	**Expert list:** 1
Min	**Max**	**Factory setting**
- [Vrms]	- [Vrms]	- [Vrms]

Description: Displays the identified threshold voltage of the power unit.

Dependency: Refer to: p1909, p1910, r1912, r1913, r1915, r1927, r1932, r1933, r1934, r1935, r1936, r1950, r1951

r1927 Rotor resistance identified / R_rotor ident

SERVO_S110-DP, SERVO_S110-CAN, SERVO_S110-PN

Can be changed: -	**Calculated:** -	**Access level:** 3
Data type: FloatingPoint32	**Dyn. index:** -	**Func. diagram:** -
P-Group: Motor identification	**Unit group:** -	**Unit selection:** -
Not for motor type: -	**Scaling:** -	**Expert list:** 1
Min	**Max**	**Factory setting**
- [ohm]	- [ohm]	- [ohm]

Description: Displays the identified rotor resistance.

Dependency: Refer to: p1909, p1910, r1912, r1913, r1915, r1925, r1932, r1933, r1934, r1935, r1936, r1950, r1951

r1932[0...19] d inductance identified / Ld ident

SERVO_S110-DP, SERVO_S110-CAN, SERVO_S110-PN

Can be changed: -	**Calculated:** -	**Access level:** 3
Data type: FloatingPoint32	**Dyn. index:** -	**Func. diagram:** -
P-Group: Motor identification	**Unit group:** -	**Unit selection:** -
Not for motor type: -	**Scaling:** -	**Expert list:** 1
Min	**Max**	**Factory setting**
- [mH]	- [mH]	- [mH]

Description: Displays the identified (differential) d-inductance.

Dependency: Refer to: p1909, p1910, r1912, r1913, r1915, r1925, r1927, r1933, r1934, r1935, r1936, r1950, r1951

Note: The Ld characteristic consists of the value pairs from p1932 and p1933 with the same index.
This value corresponds to the value of the total leakage inductance (r0377).

r1933[0...19] d inductance identification current / Ld I_ident

SERVO_S110-DP, SERVO_S110-CAN, SERVO_S110-PN

Can be changed: -	**Calculated:** -	**Access level:** 3
Data type: FloatingPoint32	**Dyn. index:** -	**Func. diagram:** -
P-Group: Motor identification	**Unit group:** -	**Unit selection:** -
Not for motor type: -	**Scaling:** -	**Expert list:** 1
Min	**Max**	**Factory setting**
- [Arms]	- [Arms]	- [Arms]

Description: Displays the identification current of the d inductance.

Dependency: Refer to: p1909, p1910, r1912, r1913, r1915, r1925, r1927, r1932, r1934, r1935, r1936, r1950, r1951

Note: The Ld characteristic consists of the value pairs from p1932 and p1933 with the same index.

r1934[0...9] q inductance identified / Lq ident

SERVO_S110-DP, SERVO_S110-CAN, SERVO_S110-PN

Can be changed: -	**Calculated:** -	**Access level:** 3
Data type: FloatingPoint32	**Dyn. index:** -	**Func. diagram:** -
P-Group: Motor identification	**Unit group:** -	**Unit selection:** -
Not for motor type: -	**Scaling:** -	**Expert list:** 1
Min	**Max**	**Factory setting**
- [mH]	- [mH]	- [mH]

Description: Displays the identified (differential) q-inductance.

Dependency: Refer to: p1909, p1910, r1932, r1933

Note: The Lq characteristic consists of the value pairs from p1934 and p1935 with the same index.
This value corresponds to the value of the total leakage inductance (r0377).

r1935[0...20] Identification current / I_ident

SERVO_S110-DP, SERVO_S110-CAN, SERVO_S110-PN

Can be changed: -	**Calculated:** -	**Access level:** 3
Data type: FloatingPoint32	**Dyn. index:** -	**Func. diagram:** -
P-Group: Motor identification	**Unit group:** -	**Unit selection:** -
Not for motor type: -	**Scaling:** -	**Expert list:** 1
Min	**Max**	**Factory setting**
- [Arms]	- [Arms]	- [Arms]

Description: Displays the identification current for the identification of the q-inductance ([0...9]) as well as the torque constant ([10]) and the torque characteristic ([11...20]).

Index:
[0] = q inductance identification current measuring point 1
[1] = q inductance identification current measuring point 2
[2] = q inductance identification current measuring point 3
[3] = q inductance identification current measuring point 4
[4] = q inductance identification current measuring point 5
[5] = q inductance identification current measuring point 6
[6] = q inductance identification current measuring point 7
[7] = q inductance identification current measuring point 8
[8] = q inductance identification current measuring point 9
[9] = q inductance identification current measuring point 10
[10] = Torque constant identification current
[11] = Torque characteristic identification current measuring point 1
[12] = Torque characteristic identification current measuring point 2
[13] = Torque characteristic identification current measuring point 3
[14] = Torque characteristic identification current measuring point 4
[15] = Torque characteristic identification current measuring point 5
[16] = Torque characteristic identification current measuring point 6
[17] = Torque characteristic identification current measuring point 7
[18] = Torque characteristic identification current measuring point 8
[19] = Torque characteristic identification current measuring point 9
[20] = Torque characteristic identification current measuring point 10

Dependency: Refer to: p1909, p1910, r1934, p1959, p1960

Note: - the Lq characteristic consists of the value pairs from r1934 and r1935 with the same index.

- the torque constant is identified with the current r1935[10] and displayed in r1937[0]. If the reluctance torque constant is identified (p1959.7 = 1), the torque constant is identified with 150% rated current (p0305), otherwise with 100% rated current.

- the torque characteristic (r1937[1...10]) is identified in the range between the rated current (p0305) and the maximum current (p0640) (r1935[11...20]).

r1936 Magnetizing inductance identified / L_H ident

SERVO_S110-DP, SERVO_S110-CAN, SERVO_S110-PN

Can be changed: -	**Calculated:** -	**Access level:** 3
Data type: FloatingPoint32	**Dyn. index:** -	**Func. diagram:** -
P-Group: Motor identification	**Unit group:** -	**Unit selection:** -
Not for motor type: -	**Scaling:** -	**Expert list:** 1
Min	**Max**	**Factory setting**
- [mH]	- [mH]	- [mH]

Description: Displays the identified magnetizing inductance(gamma equivalent circuit diagram).

Dependency: Refer to: p1909, p1910, r1913, r1915, r1927, p1959, p1960, r1962, r1963

Note: This value corresponds to the value of the transformed magnetizing inductance (r0382).

r1937[0...10] Torque constant identified / kT ident

SERVO_S110-DP, SERVO_S110-CAN, SERVO_S110-PN

Can be changed: -	**Calculated:** -	**Access level:** 3
Data type: FloatingPoint32	**Dyn. index:** -	**Func. diagram:** -
P-Group: Motor identification	**Unit group:** 28_1	**Unit selection:** p0100
Not for motor type: -	**Scaling:** -	**Expert list:** 1
Min	**Max**	**Factory setting**
- [Nm/A]	- [Nm/A]	- [Nm/A]

Description: Displays the identified torque constant/torque characteristic over the q current.

Index:
[0] = Torque constant identified
[1] = Torque characteristic identified measuring point 1
[2] = Torque characteristic identified measuring point 2
[3] = Torque characteristic identified measuring point 3
[4] = Torque characteristic identified measuring point 4
[5] = Torque characteristic identified measuring point 5
[6] = Torque characteristic identified measuring point 6
[7] = Torque characteristic identified measuring point 7
[8] = Torque characteristic identified measuring point 8
[9] = Torque characteristic identified measuring point 9
[10] = Torque characteristic identified measuring point 10

Dependency: Refer to: r1938, r1939, p1959, p1960, r1969

Note:
- the value in r1937[0] corresponds to the torque constant (p0316) and was identified with the current in r1935[10]. If the reluctance torque is identified (p1959.7 = 1), the torque constant is identified with 150% rated current (p0305), otherwise with 100% rated current.
- if indices r1937[1...10] are not equal to zero, they show the values of the torque characteristic identified for the current in r1935[11...20]. The torque characteristic is identified in the range between rated current (p0305) and maximum current (p0640).

r1938 Voltage constant identified / kE ident

SERVO_S110-DP, SERVO_S110-CAN, SERVO_S110-PN

Can be changed: -	**Calculated:** -	**Access level:** 3
Data type: FloatingPoint32	**Dyn. index:** -	**Func. diagram:** -
P-Group: Motor identification	**Unit group:** -	**Unit selection:** -
Not for motor type: -	**Scaling:** -	**Expert list:** 1
Min	**Max**	**Factory setting**
- [Vrms]	- [Vrms]	- [Vrms]

Description: Displays the identified voltage constant.

Dependency: Refer to: r1937, r1939, p1959, p1960, r1969

Note: This value corresponds to the voltage constant (p0317).

r1939 Reluctance torque constant identified / kT_reluct ident

SERVO_S110-DP, SERVO_S110-CAN, SERVO_S110-PN

Can be changed: -	**Calculated:** -	**Access level:** 3
Data type: FloatingPoint32	**Dyn. index:** -	**Func. diagram:** -
P-Group: Motor identification	**Unit group:** -	**Unit selection:** -
Not for motor type: -	**Scaling:** -	**Expert list:** 1
Min	**Max**	**Factory setting**
- [mH]	- [mH]	- [mH]

Description: Displays the identified reluctance torque constant.
Dependency: Refer to: r1937, r1938, p1959, p1960, r1969
Note: This value corresponds to the reluctance torque constant (p0328).

r1947 Optimum load angle identified / phi_load ident

SERVO_S110-DP, SERVO_S110-CAN, SERVO_S110-PN

Can be changed: -	**Calculated:** -	**Access level:** 3
Data type: FloatingPoint32	**Dyn. index:** -	**Func. diagram:** -
P-Group: Motor identification	**Unit group:** -	**Unit selection:** -
Not for motor type: -	**Scaling:** -	**Expert list:** 1
Min	**Max**	**Factory setting**
- [°]	- [°]	- [°]

Description: Displays the identified, optimum load angle.
Note: This value corresponds to the optimum load angle (p0327).

r1948 Magnetizing current identified / I_mag ident

SERVO_S110-DP, SERVO_S110-CAN, SERVO_S110-PN

Can be changed: -	**Calculated:** -	**Access level:** 3
Data type: FloatingPoint32	**Dyn. index:** -	**Func. diagram:** -
P-Group: Motor identification	**Unit group:** -	**Unit selection:** -
Not for motor type: -	**Scaling:** -	**Expert list:** 1
Min	**Max**	**Factory setting**
- [Arms]	- [Arms]	- [Arms]

Description: Displays the identified magnetizing current.
Dependency: Refer to: r1936, p1959, p1960
Note: This value corresponds to the magnetizing current (p0320 / r0331).

r1950[0...19] Voltage emulation error voltage values / U_error U_values

SERVO_S110-DP, SERVO_S110-CAN, SERVO_S110-PN

Can be changed: -	**Calculated:** -	**Access level:** 3
Data type: FloatingPoint32	**Dyn. index:** -	**Func. diagram:** -
P-Group: Motor identification	**Unit group:** -	**Unit selection:** -
Not for motor type: -	**Scaling:** -	**Expert list:** 1
Min	**Max**	**Factory setting**
- [V]	- [V]	- [V]

Description: The identified characteristic of the voltage emulation error is displayed r1950[0...19] and r1951[0...19].
Dependency: Refer to: r1951

r1951[0...19] Voltage emulation error current values / U_error I_error

SERVO_S110-DP, SERVO_S110-CAN, SERVO_S110-PN

Can be changed: -	**Calculated:** -	**Access level:** 3
Data type: FloatingPoint32	**Dyn. index:** -	**Func. diagram:** -
P-Group: Motor identification	**Unit group:** -	**Unit selection:** -
Not for motor type: -	**Scaling:** -	**Expert list:** 1
Min	**Max**	**Factory setting**
- [A]	- [A]	- [A]

Description: The identified characteristic of the voltage emulation error is displayed r1950[0...19] and r1951[0...19].
Dependency: Refer to: r1950

p1958[0...n] Rotating measurement ramp-up/ramp-down time / Rot meas t_r up/dn

SERVO_S110-DP, SERVO_S110-CAN, SERVO_S110-PN

Can be changed: T	**Calculated:** -	**Access level:** 2
Data type: FloatingPoint32	**Dyn. index:** MDS, p0130	**Func. diagram:** -
P-Group: Motor identification	**Unit group:** -	**Unit selection:** -
Not for motor type: -	**Scaling:** -	**Expert list:** 1
Min	**Max**	**Factory setting**
-1.00 [s]	999999.00 [s]	-1.00 [s]

Description: Sets the ramp-up/ramp-down time for the rotating measurement.

The following applies for negative values:

When the function module "extended setpoint channel" is activated (r0108.8 = 1), the maximum of the ramp-up/ramp-down time of the setpoint channel becomes effective. When this function module is inactive, then no ramp-up/ramp-down time is effective.

The following applies for positive values:

The selected ramp-up/ramp-down time becomes effective.

Recommendation: A ramp-up/ramp-down time should not be activated for the motor data identification (p1958 = 0) as long as this can be safely done without incurring any danger. This means that the identification is complete and more accurate. When the ramp-up/ramp-down time is activated, the following steps of the rotating motor data identification are not executed:

- p1959.5 (identifying the q inductance)
- p1959.7 (identifying the reluctance torque constant)

Dependency: Refer to: p1959, p1960

p1959[0...n] Rotating measurement configuration / Rot meas config

SERVO_S110-DP, SERVO_S110-CAN, SERVO_S110-PN

Can be changed: T	**Calculated:** CALC_MOD_ALL	**Access level:** 3
Data type: Unsigned16	**Dyn. index:** MDS, p0130	**Func. diagram:** -
P-Group: Motor identification	**Unit group:** -	**Unit selection:** -
Not for motor type: REL	**Scaling:** -	**Expert list:** 1
Min	**Max**	**Factory setting**
-	-	0000 1110 1110 0111 bin

Description: Sets the configuration of the rotating measurement.

Recommendation: A direction inhibit should not be activated for the rotating measurement (p1959.14 = 1 and p1959.15 = 1) as long as this can be done without incurring any danger. This means that the identification is complete and more accurate. When the direction inhibit is activated, the reluctance torque constant (p1959.7) is not identified and the angular commutation offset (p1959.10, p0431) is inaccurately determined. The reluctance torque constant (p1959.7) is also not identified in encoderless operation.

Bit field:

Bit	Signal name	1 signal	0 signal	FP
00	Reserved	Yes	No	-
01	Identify the saturation characteristic	Yes	No	-
02	Identify the moment of inertia	Yes	No	-
05	Identify the q inductance	Yes	No	-
06	Identify the torque constant	Yes	No	-
07	Identify the reluctance torque constant	Yes	No	-
08	Identify the q inductance at the test stand	Yes	No	-
09	Identify the magnetizing current / magnetizing inductance	Yes	No	-
10	Identify the commutation angle and direction of rotation	Yes	No	-
11	Identify rotor resistance	Yes	No	-
14	Positive direction permitted	Yes	No	-
15	Negative direction permitted	Yes	No	-

Dependency: Refer to: p1958, p1960

Notice: The step p1959.8 (identify q inductance on the test stand) may only be selected if the drive can be kept at zero speed or at a fixed speed either using a test stand or other mechanical measures.

During steps p1959.2 (identifying the moment of inertia) and p1959.6 (identifying the torque constant) the Vdc_min controller is disabled (p1240).

During step p1959.7 (identifying the reluctance torque constant) the Vdc_min controller and Vdc_max controller are disabled (p1240).

Note: For an induction motor (ASM), the following bits 1, 2, 5, 8, 9, 10, 14, 15 are effective

For a synchronous motor (SRM), the following bits 2, 5, 6, 7, 8, 10, 14, 15 are effective

Re bit 05:

For "motor holding brake the same as sequence control" (p1215 = 1 or 3), the Lq characteristic is only measured up to approximately the rated motor current (p0305) instead of up to the current limit (p0640). Before carrying out the rotation measurement for motors with brake, the brake should be opened (p1215 = 2) - as long as this can be done without incurring any danger.

Re bit 10:

If the motor holding brake is set just the same as the sequence control (p1215 = 1 or 3), the commutation angle and the direction of rotation are not measured. Before carrying out the rotation measurement for motors with brake, the brake should be opened (p1215 = 2) - as long as this can be done without incurring any danger.

Re bit 14, 15:

The following applies for bit 14 and 15 = 0:

When the function module "extended setpoint channel" is activated (r0108.8 = 1), the direction inhibit of the setpoint channel becomes effective. No direction of inhibit is effective if the function module is inactive.

The following applies for minimum bit 14 = 1 or bit 15 = 1:

The direction inhibit set in p1959 becomes effective.

p1960 Rotating measurement selection / Rot meas sel

SERVO_S110-DP, SERVO_S110-CAN, SERVO_S110-PN

Can be changed: T	**Calculated:** -	**Access level:** 2
Data type: Integer16	**Dyn. index:** -	**Func. diagram:** -
P-Group: Motor identification	**Unit group:** -	**Unit selection:** -
Not for motor type: REL	**Scaling:** -	**Expert list:** 1
Min	**Max**	**Factory setting**
-3	1	0

Description: Activates the rotating measurement.

Value:
-3: Accept identified parameters
-2: Acknowledge encoder inversion actual value (F07993)
-1: Start motor data identification without acceptance
0: Inactive/inhibit
1: Start motor data identification with acceptance

Recommendation: Before carrying out the rotation measurement for motors with brake, the brake should be opened (p1215 = 2) - as long as this can be done without incurring any danger. The commutation angle and the direction are also determined.

Dependency: Refer to: r1934, r1935, r1936, r1937, r1938, r1939, r1947, r1948, p1958, p1959, r1962, r1963, r1969

Refer to: F07990, A07991, F07993

Danger: For the rotating measurement, the motor is accelerated up to the maximum speed. Only the parameterized current limit (p0640) and the maximum speed (p1082) are effective.

The behavior of the motor can be influenced using the direction inhibit (p1959.14, p1959.15) and the ramp-up/ramp-down time (p1958).

Notice: If there is a motor holding brake, it must be open (p1215 = 2).

To permanently accept the determined settings they must be saved in a non-volatile fashion (p0971, p0977).

Note: The rotating measurement can only be selected when the pulses of all of the drive objects of the Control Unit have been suppressed. After selection, all of the other drive objects of the Control Unit are interlocked so that they cannot be powered up until the rotating measurement has been completed or de-selected.

When the rotating measurement is activated (p1960 = 1), it is not possible to save the parameters (p0971, p0977).

r1962[0...9] Saturation characteristic magnetizing current identified / Sat_char I_mag

SERVO_S110-DP, SERVO_S110-CAN, SERVO_S110-PN

Can be changed: -	**Calculated:** -	**Access level:** 3
Data type: FloatingPoint32	**Dyn. index:** -	**Func. diagram:** -
P-Group: Motor identification	**Unit group:** -	**Unit selection:** -
Not for motor type: PMSM, REL	**Scaling:** -	**Expert list:** 1
Min	**Max**	**Factory setting**
- [%]	- [%]	- [%]

Description: Displays the magnetizing currents of the identified saturation characteristic.

The values are referred to r0331.

Dependency: Refer to: p1959, p1960, r1963

Note: The saturation characteristic consists of the value pairs from p1962 and p1963 with the same index.

r1963[0...9] Saturation characteristic stator flux identified / Sat_char flux

SERVO_S110-DP, SERVO_S110-CAN, SERVO_S110-PN

Can be changed: -	**Calculated:** -	**Access level:** 3
Data type: FloatingPoint32	**Dyn. index:** -	**Func. diagram:** -
P-Group: Motor identification	**Unit group:** -	**Unit selection:** -
Not for motor type: PMSM, REL	**Scaling:** -	**Expert list:** 1
Min	**Max**	**Factory setting**
- [%]	- [%]	- [%]

Description: Displays the stator flux of the identified saturation characteristic.
The values are referred to the stator flux at the magnetizing current (r0331).

Dependency: Refer to: p1959, p1960, r1962

Note: The saturation characteristic consists of the value pairs from p1962 and p1963 with the same index.

r1969 Moment of inertia identified / M_inertia ident

SERVO_S110-DP, SERVO_S110-CAN, SERVO_S110-PN

Can be changed: -	**Calculated:** -	**Access level:** 3
Data type: FloatingPoint32	**Dyn. index:** -	**Func. diagram:** -
P-Group: Motor identification	**Unit group:** 25_1	**Unit selection:** p0100
Not for motor type: REL	**Scaling:** -	**Expert list:** 1
Min	**Max**	**Factory setting**
- [kgm²]	- [kgm²]	- [kgm²]

Description: Displays the identified moment of inertia.

Dependency: IEC drives (p0100 = 0): unit kg m^2
NEMA drives (p0100 = 1): unit lb ft^2
Refer to: p0341, p0342, p1498, p1959, p1960

r1973[0...1] Encoder pulse number identified / Pulse No. ident

SERVO_S110-DP, SERVO_S110-CAN, SERVO_S110-PN

Can be changed: -	**Calculated:** -	**Access level:** 3
Data type: Integer32	**Dyn. index:** -	**Func. diagram:** -
P-Group: Motor identification	**Unit group:** -	**Unit selection:** -
Not for motor type: REL	**Scaling:** -	**Expert list:** 1
Min	**Max**	**Factory setting**
-	-	-

Description: Index 0:
Rotating motors: Displays the identified encoder pulse number (per revolution).
Linear motors: Encoder pulse number per meter. Grid division = 1/p1973 [meter].
Index 1:
Rotating motors: No significance.
Linear motors: Identified grid division in nm.

Index: [0] = Rotating motor encoder pulse number
[1] = Linear motor grid division in nm

Notice: Due to the measuring accuracy (approx. 5 %) only the approximate value is shown in p1973 and may not be directly transferred into p0407 or p0408. An incorrect pole pair number (r0313, p0314) or pole pair width (p0315) results in an incorrect value in p1973.

Note: A negative signal indicates an incorrect polarity of the encoder signal.

p1980[0...n] PolID technique / PolID technique

SERVO_S110-DP, SERVO_S110-CAN, SERVO_S110-PN

Can be changed: U, T	**Calculated:** CALC_MOD_ALL	**Access level:** 3
Data type: Integer16	**Dyn. index:** MDS, p0130	**Func. diagram:** -
P-Group: Motor identification	**Unit group:** -	**Unit selection:** -
Not for motor type: -	**Scaling:** -	**Expert list:** 1
Min	**Max**	**Factory setting**
0	99	99

Description: Sets the pole position identification technique.

Value:
0: Saturation-based 1st + 2nd harmonics
1: Saturation-based 1st harmonics
4: Saturation based 2-stage
10: Motion-based
99: No technique selected

Dependency: Refer to: p0325, p0329, p1981, p1982, p1983, r1984, r1985, r1986, r1987, p1990, r1992, p1993, p1994, p1995, p1996, p1997

Refer to: F07995

Notice: If the incorrect technique is applied, this can cause the motor to accelerate in an uncontrolled fashion.

Under the following conditions, the integral time must be disabled (p1996 = 0):

- p1980 = 10 (motion-based)
- motor encoder with track A/B sq-wave (p0404.3 = 1)
- p0430.20 = 0 (flank time measurement)

Once the integral time has been disabled, the motion is increased during the identification (a minimum of 90 ° electrical). As a result of this, the maximum distance (p1981) must also be increased.

Note: PolID: Pole position identification

When commissioning a catalog motor, the technique is automatically selected depending on the motor type being used.

The following applies for 1FN3 motors:

A technique with 2nd harmonic may not be used (do not use p1980 = 0, 4).

For 1FK7 motors, the following applies:

A two-stage technique may not be used (do not use p1980 = 4).

The automatically set value in p0329 may not be changed.

p1981[0...n] PolID distance max / PolID distance max

SERVO_S110-DP, SERVO_S110-CAN, SERVO_S110-PN

Can be changed: U, T	**Calculated:** CALC_MOD_ALL	**Access level:** 3
Data type: FloatingPoint32	**Dyn. index:** MDS, p0130	**Func. diagram:** -
P-Group: Motor identification	**Unit group:** -	**Unit selection:** -
Not for motor type: -	**Scaling:** -	**Expert list:** 1
Min	**Max**	**Factory setting**
0 [°]	180 [°]	10 [°]

Description: Sets the maximum distance (electrical angle) when carrying out the pole position identification routine.

If this distance (travel) is exceeded, an appropriate fault is output.

Dependency: Refer to: p0325, p0329, p1980, p1982, p1983, r1984, r1985, r1986, r1987, p1990, r1992, p1993, p1994, p1995, p1996, p1997

Refer to: F07995

Notice: Value = 180 °: Monitoring is de-activated.

Note: PolID: Pole position identification

p1982[0...n] PolID selection / PolID selection

SERVO_S110-DP, SERVO_S110-CAN, SERVO_S110-PN

Can be changed: T	**Calculated:** -	**Access level:** 3
Data type: Integer16	**Dyn. index:** MDS, p0130	**Func. diagram:** -
P-Group: Motor identification	**Unit group:** -	**Unit selection:** -
Not for motor type: -	**Scaling:** -	**Expert list:** 1
Min	**Max**	**Factory setting**
0	2	0

Description: Activates the pole position identification routine to determine the commutation angle and to carry out a plausibility check.

Value:
0: Pole position identification off
1: Pole position identification for commutation
2: Pole position identification for plausibility check

Recommendation: Re p1982 = 1:

This is used for synchronous motors with motor encoder without absolute data.

The information/data regarding the absolute commutation angle is supplied via a track C/D, Hall sensors, an absolute encoder or from the pole position identification routine.

Re p1982 = 2:

This is used for synchronous motor with motor encoder with absolute data to check this data.

Dependency: Refer to: p0325, p0329, p1980, p1981, p1983, r1984, r1985, r1986, r1987, p1990, r1992, p1993, p1994, p1995, p1996, p1997

Note: PolID: Pole position identification

p1983 PolID test / PolID test

SERVO_S110-DP, SERVO_S110-CAN, SERVO_S110-PN

Can be changed: U, T	**Calculated:** -	**Access level:** 3
Data type: Unsigned16	**Dyn. index:** -	**Func. diagram:** -
P-Group: Motor identification	**Unit group:** -	**Unit selection:** -
Not for motor type: -	**Scaling:** -	**Expert list:** 1
Min	**Max**	**Factory setting**
0	1	0

Description: Starts the pole position identification routine for test purposes.

p1983 = 1:

Start of pole position identification. The parameter is set to zero automatically on completion of the identification process.

Dependency: Refer to: p0325, p0329, p1980, p1981, p1982, r1984, r1985, r1986, r1987, p1990, r1992, p1993, p1994, p1995, p1996, p1997

Notice: For p1983 = 1 and if the pulses are not enabled, then the function is only executed the next time that the pulses are enabled.

Note: When this test is executed, it does not influence the commutation angle.

r1984 PolID angular difference / PolID ang diff

SERVO_S110-DP, SERVO_S110-CAN, SERVO_S110-PN

Can be changed: -	**Calculated:** -	**Access level:** 3
Data type: FloatingPoint32	**Dyn. index:** -	**Func. diagram:** -
P-Group: Motor identification	**Unit group:** -	**Unit selection:** -
Not for motor type: -	**Scaling:** -	**Expert list:** 1
Min	**Max**	**Factory setting**
- [°]	- [°]	- [°]

Description: Displays the angular difference between the actual electrical commutation angle and the angle determined by the pole position identification.

Dependency: Refer to: p0325, p0329, p1980, p1981, p1982, p1983, r1985, r1986, r1987, p1990, r1992, p1993, p1994, p1995, p1996, p1997

Note: PolID: Pole position identification

When the pole position identification routine is executed several times using p1983, the spread of the measured values can be determined using this value. At the same position, the spread should be less than 2 degrees electrical.

r1985 PolID saturation curve / PolID sat_char

SERVO_S110-DP, SERVO_S110-CAN, SERVO_S110-PN

Can be changed: -	**Calculated:** -	**Access level:** 3
Data type: FloatingPoint32	**Dyn. index:** -	**Func. diagram:** -
P-Group: Motor identification	**Unit group:** -	**Unit selection:** -
Not for motor type: -	**Scaling:** -	**Expert list:** 1
Min	**Max**	**Factory setting**
- [Arms]	- [Arms]	- [Arms]

Description: Displays the saturation characteristic of the pole position identification routine (saturation technique).
Displays the current characteristic of the pole position identification routine (elasticity technique).

Dependency: Refer to: p0325, p0329, p1980, p1981, p1982, p1983, r1984, r1986, r1987, p1990, r1992, p1993, p1994, p1995, p1996, p1997

Note: PolID: Pole position identification
Regarding the saturation technique:
The values for the characteristic of the last saturation-based pole position identification routine are output every 1 ms in order to record signals (e.g. trace).

r1986 PolID saturation characteristic 2 / PoleID sat_curve 2

SERVO_S110-DP, SERVO_S110-CAN, SERVO_S110-PN

Can be changed: -	**Calculated:** -	**Access level:** 3
Data type: FloatingPoint32	**Dyn. index:** -	**Func. diagram:** -
P-Group: Motor identification	**Unit group:** -	**Unit selection:** -
Not for motor type: -	**Scaling:** -	**Expert list:** 1
Min	**Max**	**Factory setting**
-	-	-

Description: Displays the pole position characteristic of the elasticity-based pole position identification routine.
The values for the characteristic of the last pole position identification routine are output every 1 ms in order to record signals (e.g. trace).

Note: PolID: Pole position identification

r1987 PolID trigger characteristic / PolID trig_char

SERVO_S110-DP, SERVO_S110-CAN, SERVO_S110-PN

Can be changed: -	**Calculated:** -	**Access level:** 3
Data type: FloatingPoint32	**Dyn. index:** -	**Func. diagram:** -
P-Group: Motor identification	**Unit group:** -	**Unit selection:** -
Not for motor type: -	**Scaling:** -	**Expert list:** 1
Min	**Max**	**Factory setting**
- [%]	- [%]	- [%]

Description: Displays the trigger characteristic of the pole position identification routine.
The values for the characteristic of the last pole position identification routine are output every 1 ms in order to record signals (e.g. trace).
The values for trigger characteristic and saturation characteristic are always output in synchronism from a time perspective.

Dependency: Refer to: p0325, p0329, p1980, p1981, p1982, p1983, r1984, r1985, r1986, p1990, r1992, p1993, p1994, p1995, p1996, p1997

Note: PolID: Pole position identification
The following information and data can be taken from the trigger characteristic.
- the value -100% marks the angle at the start of the measurement.
- the value +100 % marks the commutation angle determined from the pole position identification routine.

p1990 Encoder adjustment determine angular commutation offset / Enc_adj det ang

SERVO_S110-DP, SERVO_S110-CAN, SERVO_S110-PN

Can be changed: U, T	**Calculated:** -	**Access level:** 3
Data type: Integer16	**Dyn. index:** -	**Func. diagram:** -
P-Group: Motor identification	**Unit group:** -	**Unit selection:** -
Not for motor type: -	**Scaling:** -	**Expert list:** 1
Min	**Max**	**Factory setting**
0	1	0

Description: This function is only required for synchronous motors and can be started when commissioning for the first time or after replacing an encoder. The function acts on the active motor data set.

When adjusting the encoder, the angular commutation offset is determined and transferred into p0431. Alarm A07971 is output while the angular commutation offset is being determined. p1990 is automatically set to 0 after the angular commutation offset has been determined.

p1990 = 0: De-activated

p1990 = 1: Activated with transfer

Dependency: Refer to: p0325, p0329, p0431, p1980, p1981, p1982, p1983, r1984, r1985, r1986, r1987

Refer to: A07971

Caution: In order to prevent an incorrect orientation of the electrical pole position (uncontrolled motor movement), the automatically determined angular commutation offset (p0431) should, for reasons of safety, be checked using one of the following recommendations:

Recommendation 1:

Set encoderless operation (p1300 = 20 or p1404 = 0), de-select pole position identification (p1982 = 0), operate under no-load conditions with a speed > p1755, correct the actual value inversion (p0410.0) (e.g. r0061 = r0063), read the angular error in r1778; the result in r1778 should be approximately 0, for |r1778| > 2 degrees, add the value to p0431 - taking into account the sign - and enter in p0431.

Recommendation 2:

Set the current limit to 0 (p0640 = 0), activate travel to fixed stop (p1545 = 1), record r0089[0] (phase voltage) and r0093 (electrically scaled pole position) (e.g. trace) while the motor is externally moved; in this case, the rising zero crossover of the phase voltage must coincide with the 360 ° --> 0 ° step (jump) from r0093.

Recommendation 3:

Measure the phase voltage U (measure phase U with respect to the virtual star point using 3 resistors) and r0093 (electrically scaled pole position); the rising zero crossover of the phase voltage must coincide with the 360 ° --> 0 ° step (jump) of r0093.

Recommendation 4:

Determine the average value from several results of a pole position identification routine executed as test (p1983) at various electrical angles and add the value to p0431 - taking into account the sign and enter into p0431.

Notice: For p1990 = 1 and with the pulses not enabled, the function is only executed the next time that the pulses are enabled.

Note: If fault F07414 is present, the following applies:

First set p1990 to 1, then acknowledge the fault and then issue the enable signals.

p1991[0...n] Motor changeover angular commutation correction / Ang_com corr

SERVO_S110-DP, SERVO_S110-CAN, SERVO_S110-PN

Can be changed: T	**Calculated:** -	**Access level:** 3
Data type: FloatingPoint32	**Dyn. index:** MDS, p0130	**Func. diagram:** -
P-Group: -	**Unit group:** -	**Unit selection:** -
Not for motor type: -	**Scaling:** -	**Expert list:** 1
Min	**Max**	**Factory setting**
-180 [°]	180 [°]	0 [°]

Description: Sets the angle that is added to the commutating angle.

Caution: If the angular correction is not correctly set, when changing over and with closed-loop torque control, the motor can accelerate to high speeds in spite of the fact that a setpoint of zero has been entered.

r1992 PolID diagnostics / PolID diag

SERVO_S110-DP, SERVO_S110-CAN, SERVO_S110-PN

Can be changed: -	**Calculated:** -	**Access level:** 3
Data type: Unsigned16	**Dyn. index:** -	**Func. diagram:** -
P-Group: -	**Unit group:** -	**Unit selection:** -
Not for motor type: -	**Scaling:** -	**Expert list:** 1
Min	**Max**	**Factory setting**
-	-	-

Description: Displays diagnostics information for the pole position identification routine (PolID).

Bit field:

Bit	Signal name	1 signal	0 signal	FP
00	Critical encoder fault occurred	Yes	No	-
02	Encoder parking active	Yes	No	-
05	Encoder fault Class 1	Yes	No	-
06	Encoder fault Class 2	Yes	No	-
07	Pole position identification for encoder carried out	Yes	No	-
08	Fine synchronization carried out	Yes	No	-
09	Coarse synchronization carried out	Yes	No	-
10	Commutation information available	Yes	No	-
11	Speed information available	Yes	No	-
12	Position information available	Yes	No	-
15	Zero mark passed	Yes	No	-

Dependency: Refer to: p0325, p0329, p1980, p1981, p1982, p1983, r1984, r1985, r1986, r1987, p1990, p1993, p1994, p1995, p1996, p1997

Note: PolID: Pole position identification

p1993[0...n] PolID motion-based current / PolID I mot_bas

SERVO_S110-DP, SERVO_S110-CAN, SERVO_S110-PN

Can be changed: U, T	**Calculated:** CALC_MOD_EQU	**Access level:** 3
Data type: FloatingPoint32	**Dyn. index:** MDS, p0130	**Func. diagram:** -
P-Group: Motor identification	**Unit group:** -	**Unit selection:** -
Not for motor type: -	**Scaling:** -	**Expert list:** 1
Min	**Max**	**Factory setting**
0.00 [Arms]	20000.00 [Arms]	0.00 [Arms]

Description: Sets the current when executing the motion-based pole position identification.

Dependency: Refer to: p1980, p1981, p1982, p1983, r1984, r1985, r1986, r1987, p1990, r1992, p1994, p1995, p1996, p1997

Note: PolID mot: Motion-based pole position identification

p1994[0...n] PolID motion-based rise time / PolID T mot_bas

SERVO_S110-DP, SERVO_S110-CAN, SERVO_S110-PN

Can be changed: U, T	**Calculated:** -	**Access level:** 3
Data type: FloatingPoint32	**Dyn. index:** MDS, p0130	**Func. diagram:** -
P-Group: Motor identification	**Unit group:** -	**Unit selection:** -
Not for motor type: -	**Scaling:** -	**Expert list:** 1
Min	**Max**	**Factory setting**
0 [ms]	2500 [ms]	100 [ms]

Description: Sets the rise time of the current when executing the motion-based pole position identification.

Dependency: Refer to: p1980, p1981, p1982, p1983, r1984, r1985, r1986, r1987, p1990, r1992, p1993, p1995, p1996, p1997

Note: PolID mot: Motion-based pole position identification

p1995[0...n] PolID motion-based gain / PolID kp mot_bas

SERVO_S110-DP, SERVO_S110-CAN, SERVO_S110-PN

Can be changed: U, T	**Calculated:** CALC_MOD_CON	**Access level:** 3
Data type: FloatingPoint32	**Dyn. index:** MDS, p0130	**Func. diagram:** -
P-Group: Motor identification	**Unit group:** 17_1	**Unit selection:** p0505
Not for motor type: -	**Scaling:** -	**Expert list:** 1
Min	**Max**	**Factory setting**
0.000 [Nms/rad]	999999.000 [Nms/rad]	0.300 [Nms/rad]

Description: Sets the gain when executing the motion-based pole position identification.

Dependency: Refer to: p1980, p1981, p1982, p1983, r1984, r1985, r1986, r1987, p1990, r1992, p1993, p1994, p1996, p1997

Note: PolID mot: Motion-based pole position identification

p1996[0...n] PolID motion-based integral time / PolID Tn mot_bas

SERVO_S110-DP, SERVO_S110-CAN, SERVO_S110-PN

Can be changed: U, T	**Calculated:** CALC_MOD_CON	**Access level:** 3
Data type: FloatingPoint32	**Dyn. index:** MDS, p0130	**Func. diagram:** -
P-Group: Motor identification	**Unit group:** -	**Unit selection:** -
Not for motor type: -	**Scaling:** -	**Expert list:** 1
Min	**Max**	**Factory setting**
0.0 [ms]	500.0 [ms]	2.0 [ms]

Description: Sets the integral time when executing the motion-based pole position identification.

Dependency: Refer to: p1980, p1981, p1982, p1983, r1984, r1985, r1986, r1987, p1990, r1992, p1993, p1994, p1995, p1997

Note: The value 0 de-activates the I component.

Once the integral time has been disabled, the motion is increased during the identification (a minimum of 90 ° electrical).

PolID mot: Motion-based pole position identification

p1997[0...n] PolID motion-based smoothing time / PolID t_sm mot_bas

SERVO_S110-DP, SERVO_S110-CAN, SERVO_S110-PN

Can be changed: U, T	**Calculated:** CALC_MOD_CON	**Access level:** 3
Data type: FloatingPoint32	**Dyn. index:** MDS, p0130	**Func. diagram:** -
P-Group: Motor identification	**Unit group:** -	**Unit selection:** -
Not for motor type: -	**Scaling:** -	**Expert list:** 1
Min	**Max**	**Factory setting**
0.0 [ms]	50.0 [ms]	0.0 [ms]

Description: Sets the smoothing time when executing the motion-based pole position identification.

Dependency: Refer to: p1980, p1981, p1982, p1983, r1984, r1985, r1986, r1987, p1990, r1992, p1993, p1994, p1995, p1996

Note: PolID mot: Motion-based pole position identification

p2000 Reference speed reference frequency / n_ref f_ref

SERVO_S110-DP, SERVO_S110-CAN, SERVO_S110-PN

Can be changed: T	**Calculated:** CALC_MOD_ALL	**Access level:** 2
Data type: FloatingPoint32	**Dyn. index:** -	**Func. diagram:** -
P-Group: Communications	**Unit group:** -	**Unit selection:** -
Not for motor type: -	**Scaling:** -	**Expert list:** 1
Min	**Max**	**Factory setting**
6.00 [rpm]	210000.00 [rpm]	3000.00 [rpm]

Description: Sets the reference quantity for speed and frequency.

All speeds or frequencies specified as relative value are referred to this reference quantity.

The reference quantity in this parameter corresponds to 100% or 4000 hex or 4000 0000 hex.:

Dependency: Refer to: p0500, p2001, p2002, p2003, r2004

Note: For the automatic calculation (p0340 = 1, p3900 > 0) an appropriate pre-assignment is only made if the parameter is not inhibited from being overwritten using p0573 = 1.

If a BICO interconnection is established between different physical quantities, then the particular reference quantities are used as internal conversion factor.

Example 1:

The signal of an analog input (e.g. r4055[0]) is connected to a speed setpoint (e.g. p1070[0]). The actual percentage input value is cyclically converted into the absolute speed setpoint using the reference speed (p2000).

Example 2:

The setpoint from PROFIBUS (r2050[1]) is connected to a speed setpoint (e.g. p1070[0]). The actual input value is cyclically converted into a percentage value via the pre-specified scaling 4000 hex. This percentage value is converted to the absolute speed setpoint via reference speed (p2000).

p2001 Reference voltage / Reference voltage

SERVO_S110-DP, SERVO_S110-CAN, SERVO_S110-PN

Can be changed: T	**Calculated:** CALC_MOD_ALL	**Access level:** 3
Data type: FloatingPoint32	**Dyn. index:** -	**Func. diagram:** -
P-Group: Communications	**Unit group:** -	**Unit selection:** -
Not for motor type: -	**Scaling:** -	**Expert list:** 1
Min	**Max**	**Factory setting**
10 [Vrms]	100000 [Vrms]	1000 [Vrms]

Description: Sets the reference quantity for voltages.

All voltages specified as relative value are referred to this reference quantity. This also applies for direct voltage values (= rms value) like the DC-link voltage.

The reference quantity in this parameter corresponds to 100% or 4000 hex or 4000 0000 hex.

Note:

This reference quantity also applies to direct voltage values. It is not interpreted as rms value, but as DC voltage value.

Note: For the automatic calculation (p0340 = 1, p3900 > 0) an appropriate pre-assignment is only made if the parameter is not inhibited from being overwritten using p0573 = 1.

If a BICO interconnection is established between different physical quantities, then the particular reference quantities are used as internal conversion factor.

For infeed units, the parameterized device supply voltage (p0210) is pre-assigned as the reference quantity.

Example:

The actual value of the DC link voltage (r0070) is connected to a test socket (e.g. p0771[0]). The actual voltage value is cyclically converted into a percentage of the reference voltage (p2001) and output according to the parameterized scaling.

p2002 Reference current / I_ref

SERVO_S110-DP, SERVO_S110-CAN, SERVO_S110-PN

Can be changed: T	**Calculated:** CALC_MOD_ALL	**Access level:** 3
Data type: FloatingPoint32	**Dyn. index:** -	**Func. diagram:** -
P-Group: Communications	**Unit group:** -	**Unit selection:** -
Not for motor type: -	**Scaling:** -	**Expert list:** 1
Min	**Max**	**Factory setting**
0.10 [Arms]	100000.00 [Arms]	100.00 [Arms]

Description: Sets the reference quantity for currents.

All currents specified as relative value are referred to this reference quantity.

The reference quantity in this parameter corresponds to 100% or 4000 hex or 4000 0000 hex.

Notice: If various DDS are used with different motor data, then the reference quantities remain the same as these are not changed over with the DDS. The resulting conversion factor should be taken into account (e.g. for trace records).

Example:

p2002 = 100 A

Reference quantity 100 A corresponds to 100 %

p305[0] = 100 A

Rated motor current 100 A for MDS0 in DDS0 --> 100 % corresponds to 100 % of the rated motor current

p305[1] = 50 A

Rated motor current 50 A for MDS1 in DDS1 --> 100 % corresponds to 200 % of the rated motor current

Note: For the automatic calculation (p0340 = 1, p3900 > 0) an appropriate pre-assignment is only made if the parameter is not inhibited from being overwritten using p0573 = 1.

If a BICO interconnection is established between different physical quantities, then the particular reference quantities are used as internal conversion factor.

For infeed units, the rated line current, which is obtained from the rated power and parameterized rated line supply voltage (p2002 = r0206 / p0210 / 1.73) is pre-assigned as the reference quantity.

Example:

The actual value of a phase current (r0069[0]) is connected to a test socket (e.g. p0771[0]). The actual current value is cyclically converted into a percentage of the reference current (p2002) and output according to the parameterized scaling.

p2003 Reference torque / M_ref

SERVO_S110-DP, SERVO_S110-CAN, SERVO_S110-PN

Can be changed: T	**Calculated:** CALC_MOD_ALL	**Access level:** 3
Data type: FloatingPoint32	**Dyn. index:** -	**Func. diagram:** -
P-Group: Communications	**Unit group:** 7_2	**Unit selection:** p0505
Not for motor type: -	**Scaling:** -	**Expert list:** 1
Min	**Max**	**Factory setting**
0.01 [Nm]	20000000.00 [Nm]	1.00 [Nm]

Description: Sets the reference quantity for torque.

All torques specified as relative value are referred to this reference quantity.

The reference quantity in this parameter corresponds to 100% or 4000 hex or 4000 0000 hex.

Note: For the automatic calculation (p0340 = 1, p3900 > 0) an appropriate pre-assignment is only made if the parameter is not inhibited from being overwritten using p0573 = 1.

If a BICO interconnection is established between different physical quantities, then the particular reference quantities are used as internal conversion factor.

Example:

The actual value of the total torque (r0079) is connected to a test socket (e.g. p0771[0]). The actual torque is cyclically converted into a percentage of the reference torque (p2003) and output according to the parameterized scaling.

r2004 Reference power / P_ref

SERVO_S110-DP, SERVO_S110-CAN, SERVO_S110-PN

Can be changed: -	**Calculated:** -	**Access level:** 3
Data type: FloatingPoint32	**Dyn. index:** -	**Func. diagram:** -
P-Group: Communications	**Unit group:** 14_10	**Unit selection:** p0505
Not for motor type: -	**Scaling:** -	**Expert list:** 1
Min	**Max**	**Factory setting**
- [kW]	- [kW]	- [kW]

Description: Displays the reference quantity for power.

All power ratings specified as relative value are referred to this reference quantity.

The reference quantity in this parameter corresponds to 100% or 4000 hex or 4000 0000 hex.

Dependency: This value is calculated as follows:

Infeed: Calculated from voltage times current.

Closed-loop control: Calculated from torque times speed.

Refer to: p2000, p2001, p2002, p2003

Note: If a BICO interconnection is established between different physical quantities, then the particular reference quantities are used as internal conversion factor.

The reference power is calculated as follows:

- 2 * Pi * reference speed / 60 * reference torque (motor)
- reference voltage * reference current * root(3) (infeed)

p2005 Reference angle / Reference angle

SERVO_S110-DP, SERVO_S110-CAN, SERVO_S110-PN

Can be changed: T	**Calculated:** CALC_MOD_ALL	**Access level:** 3
Data type: FloatingPoint32	**Dyn. index:** -	**Func. diagram:** -
P-Group: Communications	**Unit group:** -	**Unit selection:** -
Not for motor type: -	**Scaling:** -	**Expert list:** 1
Min	**Max**	**Factory setting**
90.00 [°]	180.00 [°]	90.00 [°]

Description: Sets the reference quantity for angle.
All angles specified as relative value are referred to this reference quantity.
The reference quantity in this parameter corresponds to 100% or 4000 hex or 4000 0000 hex.

Note: For the automatic calculation (p0340 = 1, p3900 > 0) an appropriate pre-assignment is only made if the parameter is not inhibited from being overwritten using p0573 = 1.
If a BICO interconnection is established between different physical quantities, then the particular reference quantities are used as internal conversion factor.

p2006 Reference temp / Ref temp

SERVO_S110-DP, SERVO_S110-CAN, SERVO_S110-PN

Can be changed: T	**Calculated:** CALC_MOD_ALL	**Access level:** 3
Data type: FloatingPoint32	**Dyn. index:** -	**Func. diagram:** -
P-Group: Communications	**Unit group:** -	**Unit selection:** -
Not for motor type: -	**Scaling:** -	**Expert list:** 1
Min	**Max**	**Factory setting**
50.00 [°C]	300.00 [°C]	100.00 [°C]

Description: Sets the reference quantity for temperature.
All temperatures specified as relative value are referred to this reference quantity.
The reference quantity in this parameter corresponds to 100% or 4000 hex or 4000 0000 hex.

p2007 Reference acceleration / a_ref

SERVO_S110-DP, SERVO_S110-CAN, SERVO_S110-PN

Can be changed: T	**Calculated:** CALC_MOD_ALL	**Access level:** 3
Data type: FloatingPoint32	**Dyn. index:** -	**Func. diagram:** -
P-Group: Communications	**Unit group:** -	**Unit selection:** -
Not for motor type: -	**Scaling:** -	**Expert list:** 1
Min	**Max**	**Factory setting**
0.01 [rev/s²]	500000.00 [rev/s²]	0.01 [rev/s²]

Description: Sets the reference quantity for acceleration rates.
All acceleration rates specified as relative value are referred to this reference quantity.
The reference quantity in this parameter corresponds to 100% or 4000 hex or 4000 0000 hex.

Note: For the automatic calculation (p0340 = 1, p3900 > 0) an appropriate pre-assignment is only made if the parameter is not inhibited from being overwritten using p0573 = 1. If a BICO interconnection is established between different physical quantities, then the particular reference quantities are used as internal conversion factor.
The reference acceleration is calculated as follows:
Reference speed (p2000) converted from 1/min to 1/s divided by 1 s
--> p2007 = p2000 [rpm] / (60 [s/min] * 1 [s])

p2016[0...3] CI: Comm IF USS PZD send word / Comm USS send word

CU_S110-DP, CU_S110-CAN, CU_S110-PN

Can be changed: U, T	**Calculated:** -	**Access level:** 3
Data type: Unsigned32 / Integer16	**Dyn. index:** -	**Func. diagram:** -
P-Group: Communications	**Unit group:** -	**Unit selection:** -
Not for motor type: -	**Scaling:** 4000H	**Expert list:** 1
Min	**Max**	**Factory setting**
-	-	0

Description: Selects the PZD (actual values) to be sent via the commissioning interface USS.
The actual values are displayed on an intelligent operator panel (IOP).

Index: [0] = PZD 1
[1] = PZD 2
[2] = PZD 3
[3] = PZD 4

r2019[0...7] Comm IF error statistics / Comm err

CU_S110-DP, CU_S110-CAN, CU_S110-PN

Can be changed: -	**Calculated:** -	**Access level:** 4
Data type: Unsigned32	**Dyn. index:** -	**Func. diagram:** -
P-Group: Communications	**Unit group:** -	**Unit selection:** -
Not for motor type: -	**Scaling:** -	**Expert list:** 1
Min	**Max**	**Factory setting**
-	-	-

Description: Displays the receive errors at the commissioning interface (RS232).

Index: [0] = Number of error-free telegrams
[1] = Number of rejected telegrams
[2] = Number of framing errors
[3] = Number of overrun errors
[4] = Number of parity errors
[5] = Number of starting character errors
[6] = Number of checksum errors
[7] = Number of length errors

p2020 Field bus interface baud rate / Field bus baud

CU_S110-DP

Can be changed: T	**Calculated:** -	**Access level:** 2
Data type: Integer16	**Dyn. index:** -	**Func. diagram:** -
P-Group: Communications	**Unit group:** -	**Unit selection:** -
Not for motor type: -	**Scaling:** -	**Expert list:** 1
Min	**Max**	**Factory setting**
4	13	8

Description: Sets the baud rate for the fieldbus interface USS.

Value:
4: 2400 baud
5: 4800 baud
6: 9600 baud
7: 19200 baud
8: 38400 baud
9: 57600 baud
10: 76800 baud
11: 93750 baud
12: 115200 baud
13: 187500 baud

Note: Fieldbus IF: Fieldbus interface
Changes only become effective after POWER ON.
The parameter is not influenced by setting the factory setting.
The parameter is set to the factory setting when the protocol is reselected.

p2021 Field bus interface address / Field bus address

CU_S110-DP

Can be changed: T	**Calculated:** -	**Access level:** 2
Data type: Unsigned16	**Dyn. index:** -	**Func. diagram:** -
P-Group: Communications	**Unit group:** -	**Unit selection:** -
Not for motor type: -	**Scaling:** -	**Expert list:** 1
Min	**Max**	**Factory setting**
0	31	0

Description: Displays or sets the address for the fieldbus interface USS.
The address can be set as follows:
1) Using the address switch on the Control Unit.
--> p2021 displays the address setting.
--> A change only becomes effective after a POWER ON.

2) Using p2021
--> Only if an address of 0 or an address which is invalid for the fieldbus selected in p2030 has been set using the address switch.
--> The address is saved in a non-volatile fashion using the function "copy from RAM to ROM".
--> A change only becomes effective after a POWER ON.

Dependency: Refer to: p2030

Note: Changes only become effective after POWER ON.
The parameter is not influenced by setting the factory setting.
The parameter is set to the factory setting when the protocol is reselected.

p2022 Field bus int USS PZD no. / Field bus USS PZD

CU_S110-DP

Can be changed: T	**Calculated:** -	**Access level:** 2
Data type: Unsigned16	**Dyn. index:** -	**Func. diagram:** -
P-Group: Communications	**Unit group:** -	**Unit selection:** -
Not for motor type: -	**Scaling:** -	**Expert list:** 1
Min	**Max**	**Factory setting**
0	16	2

Description: Sets the number of 16-bit words in the PZD part of the USS telegram for the field bus interface.

Dependency: Refer to: p2030

Note: The parameter is not influenced by setting the factory setting.

p2023 Field bus int USS PKW no. / Field bus USS PKW

CU_S110-DP

Can be changed: T	**Calculated:** -	**Access level:** 2
Data type: Integer16	**Dyn. index:** -	**Func. diagram:** -
P-Group: Communications	**Unit group:** -	**Unit selection:** -
Not for motor type: -	**Scaling:** -	**Expert list:** 1
Min	**Max**	**Factory setting**
0	127	127

Description: Sets the number of 16-bit words in the PKW part of the USS telegram for the field bus interface.

Value:
0: PKW 0 words
3: PKW 3 words
4: PKW 4 words
127: PKW variable

Dependency: Refer to: p2030

Note: The parameter is not influenced by setting the factory setting.

r2029[0...7] Field bus int error statistics / Field bus error

CU_S110-DP

Can be changed: -	**Calculated:** -	**Access level:** 3
Data type: Unsigned32	**Dyn. index:** -	**Func. diagram:** -
P-Group: Communications	**Unit group:** -	**Unit selection:** -
Not for motor type: -	**Scaling:** -	**Expert list:** 1
Min	**Max**	**Factory setting**
-	-	-

Description: Displays the receive errors on the field bus interface (USS).

Index:
[0] = Number of error-free telegrams
[1] = Number of rejected telegrams
[2] = Number of framing errors
[3] = Number of overrun errors
[4] = Number of parity errors
[5] = Number of starting character errors
[6] = Number of checksum errors
[7] = Number of length errors

p2030 Field bus int protocol selection / Field bus protocol

CU_S110-CAN

Can be changed: T	**Calculated:** -	**Access level:** 3
Data type: Integer16	**Dyn. index:** -	**Func. diagram:** -
P-Group: Communications	**Unit group:** -	**Unit selection:** -
Not for motor type: -	**Scaling:** -	**Expert list:** 1
Min	**Max**	**Factory setting**
0	4	4

Description: Sets the communication protocol for the field bus interface.

Value:
0: No protocol
4: CAN

Note: Changes only become effective after POWER ON.
The parameter is not influenced by setting the factory setting.

p2030 Field bus int protocol selection / Field bus protocol

CU_S110-DP

Can be changed: T	**Calculated:** -	**Access level:** 1
Data type: Integer16	**Dyn. index:** -	**Func. diagram:** -
P-Group: Communications	**Unit group:** -	**Unit selection:** -
Not for motor type: -	**Scaling:** -	**Expert list:** 1
Min	**Max**	**Factory setting**
0	3	3

Description: Sets the communication protocol for the field bus interface.

Value:
0: No protocol
1: USS
3: PROFIBUS

Note: Changes only become effective after POWER ON.
The parameter is not influenced by setting the factory setting.

p2030 Field bus int protocol selection / Field bus protocol

CU_S110-PN

Can be changed: T	**Calculated:** -	**Access level:** 1
Data type: Integer16	**Dyn. index:** -	**Func. diagram:** -
P-Group: Communications	**Unit group:** -	**Unit selection:** -
Not for motor type: -	**Scaling:** -	**Expert list:** 1
Min	**Max**	**Factory setting**
0	7	7

Description: Sets the communication protocol for the field bus interface.

Value:
0: No protocol
7: PROFINET

Note: Changes only become effective after POWER ON.
The parameter is not influenced by setting the factory setting.

r2032 Master control control word effective / PcCtrl STW eff

SERVO_S110-DP, SERVO_S110-CAN, SERVO_S110-PN

Can be changed: -	**Calculated:** -	**Access level:** 2
Data type: Unsigned16	**Dyn. index:** -	**Func. diagram:** -
P-Group: Displays, signals	**Unit group:** -	**Unit selection:** -
Not for motor type: -	**Scaling:** -	**Expert list:** 1
Min	**Max**	**Factory setting**
-	-	-

Description: Displays the effective control word 1 (STW1) of the drive for the master control.

Bit field:

Bit	Signal name	1 signal	0 signal	FP
00	ON/OFF1	Yes	No	-
01	OC / OFF2	Yes	No	-
02	OC / OFF3	Yes	No	-
03	Operation enable	Yes	No	-

04	Ramp-function generator enable	Yes	No	-
05	Start ramp-function generator	Yes	No	-
06	Speed setpoint enable	Yes	No	-
07	Acknowledge fault	Yes	No	-
08	Jog bit 0	Yes	No	3030
09	Jog bit 1	Yes	No	3030
10	Master control by PLC	Yes	No	-

Notice: The master control only influences control word 1 and speed setpoint 1. Other control words/setpoints can be transferred from another automation device.

Note: OC: Operating condition

p2035 Fieldbus interface USS PIV drive object number / Fieldbus USS DO_no

CU_S110-DP, CU_S110-CAN, CU_S110-PN

Can be changed: U, T	**Calculated:** -	**Access level:** 2
Data type: Integer16	**Dyn. index:** -	**Func. diagram:** -
P-Group: Communications	**Unit group:** -	**Unit selection:** -
Not for motor type: -	**Scaling:** -	**Expert list:** 1
Min	**Max**	**Factory setting**
1	62	2

Description: Sets the drive object number for communication via the field bus interface (USS).

Note: p2035 defines the destination for USS parameter requests (PIV).

p0978[0] defines the destination for USS process data (PZD).

The parameter is available globally on all drive objects.

The parameter is not influenced by setting the factory setting.

p2037 IF1 PROFIdrive STW1.10 = 0 mode / IF1 PD STW1.10=0

SERVO_S110-DP, SERVO_S110-PN

Can be changed: T	**Calculated:** -	**Access level:** 3
Data type: Integer16	**Dyn. index:** -	**Func. diagram:** -
P-Group: Communications	**Unit group:** -	**Unit selection:** -
Not for motor type: -	**Scaling:** -	**Expert list:** 1
Min	**Max**	**Factory setting**
0	2	0

Description: Sets the processing mode for PROFIdrive STW1.10 "master control by PLC".

Generally, control world 1 is received with the first receive word (PZD1) (this is in conformance to the PROFIdrive profile). The behavior of STW1.10 = 0 corresponds to that of the PROFIdrive profile. For other applications that deviate from this, the behavior can be adapted using this particular parameter.

Value:
0: Freeze setpoints and continue to process sign-of-life
1: Freeze setpoints and sign-of-life
2: Do not freeze setpoints

Recommendation: Do not change the setting p2037 = 0.

Note: If the STW1 is not transferred according to the PROFIdrive with PZD1 (with bit 10 "master control by PLC"), then p2037 should be set to 2.

p2038 IF1 PROFIdrive STW/ZSW interface mode / PD STW/ZSW IF mode

SERVO_S110-DP, SERVO_S110-PN

Can be changed: T	**Calculated:** -	**Access level:** 3
Data type: Integer16	**Dyn. index:** -	**Func. diagram:** -
P-Group: Communications	**Unit group:** -	**Unit selection:** -
Not for motor type: -	**Scaling:** -	**Expert list:** 1
Min	**Max**	**Factory setting**
0	1	0

Description: Sets the interface mode of the PROFIdrive control words and status words.

When selecting a telegram via p0922 (p2079), this parameter influences the device-specific assignment of the bits in the control and status words.

Value:
0: SINAMICS
1: SIMODRIVE 611 universal

Dependency: Refer to: p0922, p2079

Notice: The parameter may be protected as a result of p0922 or p2079 and cannot be changed.

Note: For p0922 (p2079) = 100 ... 199, p2038 is automatically set to 1 and p2038 can no longer be changed. This means that for these telegrams, the "SIMODRIVE 611 universal" interface mode is set and cannot be changed.

p2038 IF1 PROFIdrive STW/ZSW interface mode / PD STW/ZSW IF mode

SERVO_S110-DP (CI-loop pos ctrl, EPOS), SERVO_S110-PN (CI-loop pos ctrl, EPOS)

Can be changed: T	**Calculated:** -	**Access level:** 3
Data type: Integer16	**Dyn. index:** -	**Func. diagram:** -
P-Group: Communications	**Unit group:** -	**Unit selection:** -
Not for motor type: -	**Scaling:** -	**Expert list:** 1
Min	**Max**	**Factory setting**
0	0	0

Description: Displays the interface mode of the PROFIdrive control words and status words.

Value:
0: SINAMICS

Dependency: Refer to: p0922, p2079

Notice: The parameter may be protected as a result of p0922 or p2079 and cannot be changed.

Note: For p0922 (p2079) = 7, 9, 110, 111, p2038 is automatically set to 0 and cannot be changed.

p2040 Fieldbus interface monitoring time / Fieldbus t_monit

CU_S110-DP, CU_S110-CAN, CU_S110-PN

Can be changed: U, T	**Calculated:** -	**Access level:** 3
Data type: FloatingPoint32	**Dyn. index:** -	**Func. diagram:** -
P-Group: Communications	**Unit group:** -	**Unit selection:** -
Not for motor type: -	**Scaling:** -	**Expert list:** 1
Min	**Max**	**Factory setting**
0 [ms]	1999999 [ms]	100 [ms]

Description: Sets the monitoring time to monitor the process data received via the fieldbus interface.
If no process data is received within this time, an appropriate message is output.

Dependency: Refer to: F01910

Note: 0: The monitoring is de-activated.

p2042 PROFIBUS Ident Number / PB Ident No.

CU_S110-DP

Can be changed: T	**Calculated:** -	**Access level:** 3
Data type: Integer16	**Dyn. index:** -	**Func. diagram:** -
P-Group: Communications	**Unit group:** -	**Unit selection:** -
Not for motor type: -	**Scaling:** -	**Expert list:** 1
Min	**Max**	**Factory setting**
0	1	0

Description: Sets the PROFIBUS Ident Number (PNO-ID).
SINAMICS can be operated with various identities on PROFIBUS. This allows the use of a PROFIBUS GSD that is independent of the device (e.g. PROFIdrive VIK-NAMUR with Ident Number 3AA0 hex).

Value:
0: SINAMICS
1: VIK-NAMUR

Note: Every change only becomes effective after a POWER ON.

r2043.0...2 BO: IF1 PROFIdrive PZD state / IF1 PD PZD state

CU_S110-DP, CU_S110-PN

Can be changed: -	**Calculated:** -	**Access level:** 3
Data type: Unsigned8	**Dyn. index:** -	**Func. diagram:** 2410
P-Group: Communications	**Unit group:** -	**Unit selection:** -
Not for motor type: -	**Scaling:** -	**Expert list:** 1
Min	**Max**	**Factory setting**
-	-	-

Description: Displays the PROFIdrive PZD state.

Bit field:

Bit	Signal name	1 signal	0 signal	FP
00	Setpoint failure	Yes	No	-
01	Clock cycle synchronous operation active	Yes	No	-
02	Fieldbus oper	Yes	No	-

Dependency: Refer to: p2044
Note: When using the "setpoint failure" signal, the bus can be monitored and an application-specific response triggered when the setpoint fails.

p2044 IF1 PROFIdrive fault delay / IF1 PD fault delay

SERVO_S110-DP, SERVO_S110-PN

Can be changed: U, T	**Calculated:** -	**Access level:** 3
Data type: FloatingPoint32	**Dyn. index:** -	**Func. diagram:** 2410
P-Group: Communications	**Unit group:** -	**Unit selection:** -
Not for motor type: -	**Scaling:** -	**Expert list:** 1
Min	**Max**	**Factory setting**
0 [s]	100 [s]	0 [s]

Description: Sets the delay time to initiate fault F01910 after a setpoint failure.
The time until the fault is initiated can be used by the application. This means that is is possible to respond to the failure while the drive is still operational (e.g. emergency retraction).
Dependency: Refer to: r2043
Refer to: F01910

p2045 CI: PROFIdrive clock-cyc. synchr. master sign-of-life, signal source / PD mast-SoL S_src

CU_S110-DP, CU_S110-PN, SERVO_S110-DP, SERVO_S110-PN

Can be changed: T	**Calculated:** -	**Access level:** 3
Data type: Unsigned32 / Integer16	**Dyn. index:** -	**Func. diagram:** 2410
P-Group: Communications	**Unit group:** -	**Unit selection:** -
Not for motor type: -	**Scaling:** -	**Expert list:** 1
Min	**Max**	**Factory setting**
-	-	0

Description: Connector input for the sign-of-life of the clock synchronous PROFIdrive controller.
The sign-of-life is expected at bits 12 to 15. Bits 0 to 11 are not evaluated.
The sign-of-life signal is normally received in PZD4 (control word 2) from the PROFIdrive controller.
Dependency: Refer to: p0925, r2065
Notice: The parameter may be protected as a result of p0922 or p2079 and cannot be changed.

p2047 PROFIBUS additional monitoring time / PB suppl t_monit

CU_S110-DP

Can be changed: U, T	**Calculated:** -	**Access level:** 3
Data type: FloatingPoint32	**Dyn. index:** -	**Func. diagram:** 2410
P-Group: Communications	**Unit group:** -	**Unit selection:** -
Not for motor type: -	**Scaling:** -	**Expert list:** 1
Min	**Max**	**Factory setting**
0 [ms]	20000 [ms]	0 [ms]

Description: Sets the additional monitoring time to monitor the process data received via PROFIBUS.
The additional monitoring time enables short bus faults to be compensated.
If no process data is received within this time, an appropriate message is output.
Recommendation: Do not set the additional monitoring time for clock-synchronous operation.
Dependency: Refer to: F01910
Note: For controller STOP, the additional monitoring time is not effective.

p2048 PROFIdrive PZD sampling time / PZD t_sample

CU_S110-CAN

Can be changed: C1(3)	**Calculated:** -	**Access level:** 3
Data type: FloatingPoint32	**Dyn. index:** -	**Func. diagram:** -
P-Group: Communications	**Unit group:** -	**Unit selection:** -
Not for motor type: -	**Scaling:** -	**Expert list:** 1
Min	**Max**	**Factory setting**
4.00 [ms]	16.00 [ms]	4.00 [ms]

Description: Sets the sampling time for the process data communication (PZD).

Note: For clock cycle synchronous operation, the specified bus cycle time applies (Tdp).

p2048 PROFIdrive PZD sampling time / PZD t_sample

CU_S110-DP, CU_S110-PN

Can be changed: C1(3)	**Calculated:** -	**Access level:** 3
Data type: FloatingPoint32	**Dyn. index:** -	**Func. diagram:** -
P-Group: Communications	**Unit group:** -	**Unit selection:** -
Not for motor type: -	**Scaling:** -	**Expert list:** 1
Min	**Max**	**Factory setting**
1.00 [ms]	16.00 [ms]	4.00 [ms]

Description: Sets the sampling time for the process data communication (PZD).

Note: For clock cycle synchronous operation, the specified bus cycle time applies (Tdp).

r2050[0...4] CO: IF1 PROFIdrive PZD receive word / IF1 PZD recv word

CU_S110-DP, CU_S110-CAN, CU_S110-PN

Can be changed: -	**Calculated:** -	**Access level:** 3
Data type: Integer16	**Dyn. index:** -	**Func. diagram:** -
P-Group: Communications	**Unit group:** -	**Unit selection:** -
Not for motor type: -	**Scaling:** 4000H	**Expert list:** 1
Min	**Max**	**Factory setting**
-	-	-

Description: Connector output to interconnect PZD (setpoints) with word format received from the PROFIdrive controller.

Index:
[0] = PZD 1
[1] = PZD 2
[2] = PZD 3
[3] = PZD 4
[4] = PZD 5

Note: IF1: Interface 1

r2050[0...19] CO: IF1 PROFIdrive PZD receive word / IF1 PZD recv word

SERVO_S110-DP, SERVO_S110-CAN, SERVO_S110-PN

Can be changed: -	**Calculated:** -	**Access level:** 3
Data type: Integer16	**Dyn. index:** -	**Func. diagram:** 2440, 2468
P-Group: Communications	**Unit group:** -	**Unit selection:** -
Not for motor type: -	**Scaling:** 4000H	**Expert list:** 1
Min	**Max**	**Factory setting**
-	-	-

Description: Connector output to interconnect PZD (setpoints) with word format received from the PROFIdrive controller.

Index:
[0] = PZD 1
[1] = PZD 2
[2] = PZD 3
[3] = PZD 4
[4] = PZD 5
[5] = PZD 6
[6] = PZD 7
[7] = PZD 8
[8] = PZD 9
[9] = PZD 10
[10] = PZD 11
[11] = PZD 12
[12] = PZD 13
[13] = PZD 14
[14] = PZD 15
[15] = PZD 16
[16] = PZD 17
[17] = PZD 18
[18] = PZD 19
[19] = PZD 20

Dependency: Refer to: r2060

Notice: Where there is a multiple interconnection of a connector output, all the connector inputs must either have Integer or FloatingPoint data types.
A BICO interconnection for a single PZD can only take place either on r2050 or r2060.

Note: IF1: Interface 1

p2051[0...20] CI: IF1 PROFIdrive PZD send word / IF1 PZD send word

CU_S110-DP, CU_S110-CAN, CU_S110-PN

Can be changed: U, T	**Calculated:** -	**Access level:** 3
Data type: Unsigned32 / Integer16	**Dyn. index:** -	**Func. diagram:** -
P-Group: Communications	**Unit group:** -	**Unit selection:** -
Not for motor type: -	**Scaling:** 4000H	**Expert list:** 1
Min	**Max**	**Factory setting**
-	-	0

Description: Selects the PZD (actual values) with word format to be sent to the PROFIdrive controller.

Index:
[0] = PZD 1
[1] = PZD 2
[2] = PZD 3
[3] = PZD 4
[4] = PZD 5
[5] = PZD 6
[6] = PZD 7
[7] = PZD 8
[8] = PZD 9
[9] = PZD 10
[10] = PZD 11
[11] = PZD 12
[12] = PZD 13
[13] = PZD 14
[14] = PZD 15
[15] = PZD 16
[16] = PZD 17
[17] = PZD 18
[18] = PZD 19
[19] = PZD 20
[20] = PZD 21

Notice: The parameter may be protected as a result of p0922 or p2079 and cannot be changed.

Note: IF1: Interface 1

p2051[0...27] CI: IF1 PROFIdrive PZD send word / IF1 PZD send word

SERVO_S110-DP, SERVO_S110-CAN, SERVO_S110-PN

Can be changed: U, T	**Calculated:** -	**Access level:** 3
Data type: Unsigned32 / Integer16	**Dyn. index:** -	**Func. diagram:** 2470
P-Group: Communications	**Unit group:** -	**Unit selection:** -
Not for motor type: -	**Scaling:** 4000H	**Expert list:** 1
Min	**Max**	**Factory setting**
-	-	0

Description: Selects the PZD (actual values) with word format to be sent to the PROFIdrive controller.

Index:
[0] = PZD 1
[1] = PZD 2
[2] = PZD 3
[3] = PZD 4
[4] = PZD 5
[5] = PZD 6
[6] = PZD 7
[7] = PZD 8
[8] = PZD 9
[9] = PZD 10
[10] = PZD 11
[11] = PZD 12
[12] = PZD 13
[13] = PZD 14
[14] = PZD 15

[15] = PZD 16
[16] = PZD 17
[17] = PZD 18
[18] = PZD 19
[19] = PZD 20
[20] = PZD 21
[21] = PZD 22
[22] = PZD 23
[23] = PZD 24
[24] = PZD 25
[25] = PZD 26
[26] = PZD 27
[27] = PZD 28

Dependency: Refer to: p2061

Notice: The parameter may be protected as a result of p0922 or p2079 and cannot be changed.

Note: IF1: Interface 1

r2053[0...20] IF1 PROFIdrive diagnostics PZD send word / IF1 diag send word

CU_S110-DP, CU_S110-CAN, CU_S110-PN

Can be changed: -	**Calculated:** -	**Access level:** 3
Data type: Unsigned16	**Dyn. index:** -	**Func. diagram:** -
P-Group: Communications	**Unit group:** -	**Unit selection:** -
Not for motor type: -	**Scaling:** -	**Expert list:** 1
Min	**Max**	**Factory setting**
-	-	-

Description: Displays the PZD (actual values) with word format sent to the PROFIdrive controller.

Index:
[0] = PZD 1
[1] = PZD 2
[2] = PZD 3
[3] = PZD 4
[4] = PZD 5
[5] = PZD 6
[6] = PZD 7
[7] = PZD 8
[8] = PZD 9
[9] = PZD 10
[10] = PZD 11
[11] = PZD 12
[12] = PZD 13
[13] = PZD 14
[14] = PZD 15
[15] = PZD 16
[16] = PZD 17
[17] = PZD 18
[18] = PZD 19
[19] = PZD 20
[20] = PZD 21

Bit field:

Bit	Signal name	1 signal	0 signal	FP
00	Bit 0	ON	OFF	-
01	Bit 1	ON	OFF	-
02	Bit 2	ON	OFF	-
03	Bit 3	ON	OFF	-
04	Bit 4	ON	OFF	-
05	Bit 5	ON	OFF	-
06	Bit 6	ON	OFF	-
07	Bit 7	ON	OFF	-
08	Bit 8	ON	OFF	-
09	Bit 9	ON	OFF	-
10	Bit 10	ON	OFF	-
11	Bit 11	ON	OFF	-
12	Bit 12	ON	OFF	-
13	Bit 13	ON	OFF	-

14	Bit 14	ON	OFF	-
15	Bit 15	ON	OFF	-

Note: IF1: Interface 1

r2053[0...27] IF1 PROFIdrive diagnostics PZD send word / IF1 diag send word

SERVO_S110-DP, SERVO_S110-CAN, SERVO_S110-PN

Can be changed: -	**Calculated:** -	**Access level:** 3
Data type: Unsigned16	**Dyn. index:** -	**Func. diagram:** 2450, 2470
P-Group: Communications	**Unit group:** -	**Unit selection:** -
Not for motor type: -	**Scaling:** -	**Expert list:** 1
Min	**Max**	**Factory setting**
-	-	-

Description: Displays the PZD (actual values) with word format sent to the PROFIdrive controller.

Index:
[0] = PZD 1
[1] = PZD 2
[2] = PZD 3
[3] = PZD 4
[4] = PZD 5
[5] = PZD 6
[6] = PZD 7
[7] = PZD 8
[8] = PZD 9
[9] = PZD 10
[10] = PZD 11
[11] = PZD 12
[12] = PZD 13
[13] = PZD 14
[14] = PZD 15
[15] = PZD 16
[16] = PZD 17
[17] = PZD 18
[18] = PZD 19
[19] = PZD 20
[20] = PZD 21
[21] = PZD 22
[22] = PZD 23
[23] = PZD 24
[24] = PZD 25
[25] = PZD 26
[26] = PZD 27
[27] = PZD 28

Bit field:

Bit	Signal name	1 signal	0 signal	FP
00	Bit 0	ON	OFF	-
01	Bit 1	ON	OFF	-
02	Bit 2	ON	OFF	-
03	Bit 3	ON	OFF	-
04	Bit 4	ON	OFF	-
05	Bit 5	ON	OFF	-
06	Bit 6	ON	OFF	-
07	Bit 7	ON	OFF	-
08	Bit 8	ON	OFF	-
09	Bit 9	ON	OFF	-
10	Bit 10	ON	OFF	-
11	Bit 11	ON	OFF	-
12	Bit 12	ON	OFF	-
13	Bit 13	ON	OFF	-
14	Bit 14	ON	OFF	-
15	Bit 15	ON	OFF	-

Dependency: Refer to: p2051, p2061

Note: IF1: Interface 1

r2054 PROFIBUS status / PB status

CU_S110-DP	**Can be changed:** -	**Calculated:** -	**Access level:** 3
	Data type: Integer16	**Dyn. index:** -	**Func. diagram:** 2410
	P-Group: Communications	**Unit group:** -	**Unit selection:** -
	Not for motor type: -	**Scaling:** -	**Expert list:** 1
	Min	**Max**	**Factory setting**
	0	4	-

Description: Status display for the PROFIBUS interface.

Value:
0: OFF
1: No connection (search for baud rate)
2: Connection OK (baud rate found)
3: Cyclic connection with master (data exchange)
4: Cyclic data OK

Note:
Re r2054 = 3:

In state 3 (the LED flashes green), a cyclic connection has been established to the PROFIBUS master; however, one of the following prerequisites is missing for cyclic operation:

- No setpoints are being received as the PROFIBUS master is in the STOP condition.

Only for clock-cycle synchronous operation, the following applies:

- The drive is not in synchronism as the global control (GC) has an error.

Re r2054 = 4:

In the status 4 (LED green), the cyclic connection to the PROFIBUS master has been established and setpoints are being received. The clock cycle synchronization is OK, the global control (GC) is error-free.

This state does not provide any statement regarding the quality of the clock cycle synchronous sign-of-life characters on the drive objects.

r2055[0...2] PROFIBUS diagnostics standard / PB diag standard

CU_S110-DP	**Can be changed:** -	**Calculated:** -	**Access level:** 3
	Data type: Unsigned16	**Dyn. index:** -	**Func. diagram:** 2410
	P-Group: Communications	**Unit group:** -	**Unit selection:** -
	Not for motor type: -	**Scaling:** -	**Expert list:** 1
	Min	**Max**	**Factory setting**
	-	-	-

Description: Diagnostics display for the PROFIBUS interface.

Index:
[0] = Master bus address
[1] = Master input total length bytes
[2] = Master output total length bytes

r2057 PROFIBUS address switch diagnostics / PB addr diagn

CU_S110-DP	**Can be changed:** -	**Calculated:** -	**Access level:** 3
	Data type: Unsigned16	**Dyn. index:** -	**Func. diagram:** 2410
	P-Group: Communications	**Unit group:** -	**Unit selection:** -
	Not for motor type: -	**Scaling:** -	**Expert list:** 1
	Min	**Max**	**Factory setting**
	-	-	-

Description: Displays the setting of the PROFIBUS address switch "DP ADDRESS" on the Control Unit.

Dependency: Refer to: p0918

r2060[0...18] CO: IF1 PROFIdrive PZD receive double word / IF1 PZD recv DW

SERVO_S110-DP, SERVO_S110-CAN, SERVO_S110-PN

Can be changed: -	**Calculated:** -	**Access level:** 3
Data type: Integer32	**Dyn. index:** -	**Func. diagram:** 2440, 2468
P-Group: Communications	**Unit group:** -	**Unit selection:** -
Not for motor type: -	**Scaling:** 4000H	**Expert list:** 1
Min	**Max**	**Factory setting**
-	-	-

Description: Connector output to interconnect PZD (setpoints) with double word format received from the PROFIdrive controller.

Index:
[0] = PZD 1 + 2
[1] = PZD 2 + 3
[2] = PZD 3 + 4
[3] = PZD 4 + 5
[4] = PZD 5 + 6
[5] = PZD 6 + 7
[6] = PZD 7 + 8
[7] = PZD 8 + 9
[8] = PZD 9 + 10
[9] = PZD 10 + 11
[10] = PZD 11 + 12
[11] = PZD 12 + 13
[12] = PZD 13 + 14
[13] = PZD 14 + 15
[14] = PZD 15 + 16
[15] = PZD 16 + 17
[16] = PZD 17 + 18
[17] = PZD 18 + 19
[18] = PZD 19 + 20

Dependency: Refer to: r2050

Notice: Where there is a multiple interconnection of a connector output, all the connector inputs must either have Integer or FloatingPoint data types.
A BICO interconnection for a single PZD can only take place either on r2050 or r2060.
A maximum of 4 indices of the "trace" function can be used.

Note: IF1: Interface 1

p2061[0...26] CI: IF1 PROFIdrive PZD send double word / IF1 PZD send DW

SERVO_S110-DP, SERVO_S110-CAN, SERVO_S110-PN

Can be changed: U, T	**Calculated:** -	**Access level:** 3
Data type: Unsigned32 / Integer32	**Dyn. index:** -	**Func. diagram:** 2470
P-Group: Communications	**Unit group:** -	**Unit selection:** -
Not for motor type: -	**Scaling:** 4000H	**Expert list:** 1
Min	**Max**	**Factory setting**
-	-	0

Description: Selects the PZD (actual values) with double word format to be sent to the PROFIdrive controller.

Index:
[0] = PZD 1 + 2
[1] = PZD 2 + 3
[2] = PZD 3 + 4
[3] = PZD 4 + 5
[4] = PZD 5 + 6
[5] = PZD 6 + 7
[6] = PZD 7 + 8
[7] = PZD 8 + 9
[8] = PZD 9 + 10
[9] = PZD 10 + 11
[10] = PZD 11 + 12
[11] = PZD 12 + 13
[12] = PZD 13 + 14
[13] = PZD 14 + 15
[14] = PZD 15 + 16
[15] = PZD 16 + 17
[16] = PZD 17 + 18

[17] = PZD 18 + 19
[18] = PZD 19 + 20
[19] = PZD 20 + 21
[20] = PZD 21 + 22
[21] = PZD 22 + 23
[22] = PZD 23 + 24
[23] = PZD 24 + 25
[24] = PZD 25 + 26
[25] = PZD 26 + 27
[26] = PZD 27 + 28

Dependency: Refer to: p2051

Notice: A BICO interconnection for a single PZD can only take place either on p2051 or p2061.
The parameter may be protected as a result of p0922 or p2079 and cannot be changed.

Note: IF1: Interface 1

r2063[0...26] IF1 PROFIdrive diagnostics PZD send double word / IF1 diag send DW

SERVO_S110-DP, SERVO_S110-CAN, SERVO_S110-PN

Can be changed: -	**Calculated:** -	**Access level:** 3
Data type: Unsigned32	**Dyn. index:** -	**Func. diagram:** 2450, 2470
P-Group: Communications	**Unit group:** -	**Unit selection:** -
Not for motor type: -	**Scaling:** -	**Expert list:** 1
Min	**Max**	**Factory setting**
-	-	-

Description: Displays the PZD (actual values) with double word format sent to the PROFIdrive controller.

Index: [0] = PZD 1 + 2
[1] = PZD 2 + 3
[2] = PZD 3 + 4
[3] = PZD 4 + 5
[4] = PZD 5 + 6
[5] = PZD 6 + 7
[6] = PZD 7 + 8
[7] = PZD 8 + 9
[8] = PZD 9 + 10
[9] = PZD 10 + 11
[10] = PZD 11 + 12
[11] = PZD 12 + 13
[12] = PZD 13 + 14
[13] = PZD 14 + 15
[14] = PZD 15 + 16
[15] = PZD 16 + 17
[16] = PZD 17 + 18
[17] = PZD 18 + 19
[18] = PZD 19 + 20
[19] = PZD 20 + 21
[20] = PZD 21 + 22
[21] = PZD 22 + 23
[22] = PZD 23 + 24
[23] = PZD 24 + 25
[24] = PZD 25 + 26
[25] = PZD 26 + 27
[26] = PZD 27 + 28

Bit field:

Bit	Signal name	1 signal	0 signal	FP
00	Bit 0	ON	OFF	-
01	Bit 1	ON	OFF	-
02	Bit 2	ON	OFF	-
03	Bit 3	ON	OFF	-
04	Bit 4	ON	OFF	-
05	Bit 5	ON	OFF	-
06	Bit 6	ON	OFF	-
07	Bit 7	ON	OFF	-
08	Bit 8	ON	OFF	-
09	Bit 9	ON	OFF	-
10	Bit 10	ON	OFF	-

11	Bit 11	ON	OFF	-
12	Bit 12	ON	OFF	-
13	Bit 13	ON	OFF	-
14	Bit 14	ON	OFF	-
15	Bit 15	ON	OFF	-
16	Bit 16	ON	OFF	-
17	Bit 17	ON	OFF	-
18	Bit 18	ON	OFF	-
19	Bit 19	ON	OFF	-
20	Bit 20	ON	OFF	-
21	Bit 21	ON	OFF	-
22	Bit 22	ON	OFF	-
23	Bit 23	ON	OFF	-
24	Bit 24	ON	OFF	-
25	Bit 25	ON	OFF	-
26	Bit 26	ON	OFF	-
27	Bit 27	ON	OFF	-
28	Bit 28	ON	OFF	-
29	Bit 29	ON	OFF	-
30	Bit 30	ON	OFF	-
31	Bit 31	ON	OFF	-

Notice: A maximum of 4 indices of the "trace" function can be used.

Note: IF1: Interface 1

r2064[0...7] PROFIdrive diagnostics clock synchronous mode / PD diag clock sync

CU_S110-DP, CU_S110-PN

Can be changed: -	**Calculated:** -	**Access level:** 3
Data type: Integer32	**Dyn. index:** -	**Func. diagram:** 2410
P-Group: Communications	**Unit group:** -	**Unit selection:** -
Not for motor type: -	**Scaling:** -	**Expert list:** 1
Min	**Max**	**Factory setting**
-	-	-

Description: Displays the last parameter received from the PROFIdrive controller for clock synchronism.

The parameters for clock synchronism are created when configuring the bus and are transferred at the start of cyclic operation from the controller to the device.

Index:
[0] = Clock synchronous mode activated
[1] = Bus cycle time (Tdp) [µs]
[2] = Master cycle time (Tmapc) [µs]
[3] = Instant of actual value acquisition (Ti) [µs]
[4] = Instant of setpoint acquisition (To) [µs]
[5] = Data exchange interval (Tdx) [µs]
[6] = PLL window (Tpll-w) [1/12 µs]
[7] = PLL delay time (Tpll-d) [1/12 µs]

r2065 PROFIdrive controller sign-of-life, diagnostics / PD ctrl SoL diag

CU_S110-DP, CU_S110-PN, SERVO_S110-DP, SERVO_S110-PN

Can be changed: -	**Calculated:** -	**Access level:** 3
Data type: Unsigned16	**Dyn. index:** -	**Func. diagram:** 2410
P-Group: Communications	**Unit group:** -	**Unit selection:** -
Not for motor type: -	**Scaling:** -	**Expert list:** 1
Min	**Max**	**Factory setting**
-	-	-

Description: Displays how often the sign-of-life from the clock synchronous PROFIdrive controller has failed.

An appropriate fault is output when the tolerance, specified in p0925, is exceeded.

Dependency: Refer to: F01912

r2074[0...4] IF1 PROFIdrive diagnostics bus address PZD receive / IF1diag addr recv

CU_S110-DP	**Can be changed:** -	**Calculated:** -	**Access level:** 3
	Data type: Unsigned16	**Dyn. index:** -	**Func. diagram:** -
	P-Group: Communications	**Unit group:** -	**Unit selection:** -
	Not for motor type: -	**Scaling:** -	**Expert list:** 1
	Min	**Max**	**Factory setting**
	-	-	-

Description: Displays the PROFIBUS address of the sender from which the process data (PZD) is received.

Index:
[0] = PZD 1
[1] = PZD 2
[2] = PZD 3
[3] = PZD 4
[4] = PZD 5

Note:
IF1: Interface 1
Value range:
0 - 125: Bus address of the sender
65535: not assigned

r2074[0...19] IF1 PROFIdrive diagnostics bus address PZD receive / IF1diag addr recv

SERVO_S110-DP	**Can be changed:** -	**Calculated:** -	**Access level:** 3
	Data type: Unsigned16	**Dyn. index:** -	**Func. diagram:** -
	P-Group: Communications	**Unit group:** -	**Unit selection:** -
	Not for motor type: -	**Scaling:** -	**Expert list:** 1
	Min	**Max**	**Factory setting**
	-	-	-

Description: Displays the PROFIBUS address of the sender from which the process data (PZD) is received.

Index:
[0] = PZD 1
[1] = PZD 2
[2] = PZD 3
[3] = PZD 4
[4] = PZD 5
[5] = PZD 6
[6] = PZD 7
[7] = PZD 8
[8] = PZD 9
[9] = PZD 10
[10] = PZD 11
[11] = PZD 12
[12] = PZD 13
[13] = PZD 14
[14] = PZD 15
[15] = PZD 16
[16] = PZD 17
[17] = PZD 18
[18] = PZD 19
[19] = PZD 20

Note:
IF1: Interface 1
Value range:
0 - 125: Bus address of the sender
65535: not assigned

r2075[0...4] IF1 PROFIdrive diagnostics telegram offset PZD receive / IF1 diag offs recv

CU_S110-DP, CU_S110-PN

Can be changed: -	**Calculated:** -	**Access level:** 3
Data type: Unsigned16	**Dyn. index:** -	**Func. diagram:** -
P-Group: Communications	**Unit group:** -	**Unit selection:** -
Not for motor type: -	**Scaling:** -	**Expert list:** 1
Min	**Max**	**Factory setting**
-	-	-

Description: Displays the PZD byte offset in the PROFIdrive receive telegram (controller output).

Index:
[0] = PZD 1
[1] = PZD 2
[2] = PZD 3
[3] = PZD 4
[4] = PZD 5

Note:
IF1: Interface 1
Value range:
0 - 242: Byte offset
65535: not assigned

r2075[0...19] IF1 PROFIdrive diagnostics telegram offset PZD receive / IF1 diag offs recv

SERVO_S110-DP, SERVO_S110-PN

Can be changed: -	**Calculated:** -	**Access level:** 3
Data type: Unsigned16	**Dyn. index:** -	**Func. diagram:** -
P-Group: Communications	**Unit group:** -	**Unit selection:** -
Not for motor type: -	**Scaling:** -	**Expert list:** 1
Min	**Max**	**Factory setting**
-	-	-

Description: Displays the PZD byte offset in the PROFIdrive receive telegram (controller output).

Index:
[0] = PZD 1
[1] = PZD 2
[2] = PZD 3
[3] = PZD 4
[4] = PZD 5
[5] = PZD 6
[6] = PZD 7
[7] = PZD 8
[8] = PZD 9
[9] = PZD 10
[10] = PZD 11
[11] = PZD 12
[12] = PZD 13
[13] = PZD 14
[14] = PZD 15
[15] = PZD 16
[16] = PZD 17
[17] = PZD 18
[18] = PZD 19
[19] = PZD 20

Note:
IF1: Interface 1
Value range:
0 - 242: Byte offset
65535: not assigned

r2076[0...20] IF1 PROFIdrive diagnostics telegram offset PZD send / IF1 diag offs send

CU_S110-DP, CU_S110-PN

Can be changed: -	**Calculated:** -	**Access level:** 3
Data type: Unsigned16	**Dyn. index:** -	**Func. diagram:** -
P-Group: Communications	**Unit group:** -	**Unit selection:** -
Not for motor type: -	**Scaling:** -	**Expert list:** 1
Min	**Max**	**Factory setting**
-	-	-

Description: Displays the PZD byte offset in the PROFIdrive send telegram (controller input).

Index:
[0] = PZD 1
[1] = PZD 2
[2] = PZD 3
[3] = PZD 4
[4] = PZD 5
[5] = PZD 6
[6] = PZD 7
[7] = PZD 8
[8] = PZD 9
[9] = PZD 10
[10] = PZD 11
[11] = PZD 12
[12] = PZD 13
[13] = PZD 14
[14] = PZD 15
[15] = PZD 16
[16] = PZD 17
[17] = PZD 18
[18] = PZD 19
[19] = PZD 20
[20] = PZD 21

Note:
IF1: Interface 1
Value range:
0 - 242: Byte offset
65535: not assigned

r2076[0...27] IF1 PROFIdrive diagnostics telegram offset PZD send / IF1 diag offs send

SERVO_S110-DP, SERVO_S110-PN

Can be changed: -	**Calculated:** -	**Access level:** 3
Data type: Unsigned16	**Dyn. index:** -	**Func. diagram:** -
P-Group: Communications	**Unit group:** -	**Unit selection:** -
Not for motor type: -	**Scaling:** -	**Expert list:** 1
Min	**Max**	**Factory setting**
-	-	-

Description: Displays the PZD byte offset in the PROFIdrive send telegram (controller input).

Index:
[0] = PZD 1
[1] = PZD 2
[2] = PZD 3
[3] = PZD 4
[4] = PZD 5
[5] = PZD 6
[6] = PZD 7
[7] = PZD 8
[8] = PZD 9
[9] = PZD 10
[10] = PZD 11
[11] = PZD 12
[12] = PZD 13
[13] = PZD 14
[14] = PZD 15
[15] = PZD 16
[16] = PZD 17

[17] = PZD 18
[18] = PZD 19
[19] = PZD 20
[20] = PZD 21
[21] = PZD 22
[22] = PZD 23
[23] = PZD 24
[24] = PZD 25
[25] = PZD 26
[26] = PZD 27
[27] = PZD 28

Note: IF1: Interface 1
Value range:
0 - 242: Byte offset
65535: not assigned

r2077[0...15] PROFIBUS diagnostics peer-to-peer data transfer addresses / PB diag peer addr

CU_S110-DP

Can be changed: -	**Calculated:** -	**Access level:** 3
Data type: Unsigned8	**Dyn. index:** -	**Func. diagram:** -
P-Group: -	**Unit group:** -	**Unit selection:** -
Not for motor type: -	**Scaling:** -	**Expert list:** 1
Min	**Max**	**Factory setting**
-	-	-

Description: Displays the addresses of the slaves (peers) where peer-to-peer data transfer has been configured via PROFIBUS.

p2079 IF1 PROFIdrive PZD telegram selection extended / IF1 PD PZD tel ext

CU_S110-DP, CU_S110-PN

Can be changed: T	**Calculated:** -	**Access level:** 3
Data type: Integer16	**Dyn. index:** -	**Func. diagram:** -
P-Group: Communications	**Unit group:** -	**Unit selection:** -
Not for motor type: -	**Scaling:** -	**Expert list:** 1
Min	**Max**	**Factory setting**
390	999	999

Description: Sets the send and receive telegram.
Contrary to p0922, a telegram can be selected using p2079 and subsequently expanded.
For p0922 < 999 the following applies:
p2079 has the same value and is inhibited. All of the interconnections and extensions contained in the telegram are inhibited.
For p0922 = 999 the following applies:
p2079 can be freely set. If p2079 is also set to 999, then all of the interconnections can be set.
For p0922 = 999 and p2079 < 999 the following applies:
The interconnections contained in the telegram are inhibited. However, the telegram can be extended.

Value:
390: SIEMENS telegram 390, PZD-2/2
391: SIEMENS telegram 391, PZD-3/7
392: SIEMENS telegram 392, PZD-3/15
393: SIEMENS telegram 393, PZD-4/21
394: SIEMENS telegram 394, PZD-3/3
999: Free telegram configuration with BICO

p2079 IF1 PROFIdrive PZD telegram selection extended / IF1 PD PZD tel ext

SERVO_S110-DP, SERVO_S110-PN

Can be changed: T	**Calculated:** -	**Access level:** 3
Data type: Integer16	**Dyn. index:** -	**Func. diagram:** -
P-Group: Communications	**Unit group:** -	**Unit selection:** -
Not for motor type: -	**Scaling:** -	**Expert list:** 1
Min	**Max**	**Factory setting**
1	999	999

Description: Sets the send and receive telegram.

Contrary to p0922, a telegram can be selected using p2079 and subsequently expanded.
For p0922 < 999 the following applies:
p2079 has the same value and is inhibited. All of the interconnections and extensions contained in the telegram are inhibited.
For p0922 = 999 the following applies:
p2079 can be freely set. If p2079 is also set to 999, then all of the interconnections can be set.
For p0922 = 999 and p2079 < 999 the following applies:
The interconnections contained in the telegram are inhibited. However, the telegram can be extended.

Value:
1: Standard telegram 1, PZD-2/2
2: Standard telegram 2, PZD-4/4
3: Standard telegram 3, PZD-5/9
4: Standard telegram 4, PZD-6/14
102: SIEMENS telegram 102, PZD-6/10
103: SIEMENS telegram 103, PZD-7/15
999: Free telegram configuration with BICO

Dependency: Refer to: p0922

p2079 IF1 PROFIdrive PZD telegram selection extended / IF1 PD PZD tel ext

SERVO_S110-DP (Cl-loop pos ctrl, EPOS), SERVO_S110-PN (Cl-loop pos ctrl, EPOS)

Can be changed: T	**Calculated:** -	**Access level:** 3
Data type: Integer16	**Dyn. index:** -	**Func. diagram:** -
P-Group: Communications	**Unit group:** -	**Unit selection:** -
Not for motor type: -	**Scaling:** -	**Expert list:** 1
Min	**Max**	**Factory setting**
7	999	999

Description: Sets the send and receive telegram.
Contrary to p0922, a telegram can be selected using p2079 and subsequently expanded.
For p0922 < 999 the following applies:
p2079 has the same value and is inhibited. All of the interconnections and extensions contained in the telegram are inhibited.
For p0922 = 999 the following applies:
p2079 can be freely set. If p2079 is also set to 999, then all of the interconnections can be set.
For p0922 = 999 and p2079 < 999 the following applies:
The interconnections contained in the telegram are inhibited. However, the telegram can be extended.

Value:
7: Standard telegram 7, PZD-2/2
9: Standard telegram 9, PZD-10/5
110: SIEMENS telegram 110, PZD-12/7
111: SIEMENS telegram 111, PZD-12/12
999: Free telegram configuration with BICO

Dependency: Refer to: p0922

p2079 IF1 PROFIdrive PZD telegram selection extended / IF1 PD PZD tel ext

SERVO_S110-DP (Cl-loop pos ctrl), SERVO_S110-PN (Cl-loop pos ctrl)

Can be changed: T	**Calculated:** -	**Access level:** 3
Data type: Integer16	**Dyn. index:** -	**Func. diagram:** -
P-Group: Communications	**Unit group:** -	**Unit selection:** -
Not for motor type: -	**Scaling:** -	**Expert list:** 1
Min	**Max**	**Factory setting**
999	999	999

Description: Sets the send and receive telegram.
Contrary to p0922, a telegram can be selected using p2079 and subsequently expanded.
For p0922 < 999 the following applies:
p2079 has the same value and is inhibited. All of the interconnections and extensions contained in the telegram are inhibited.
For p0922 = 999 the following applies:
p2079 can be freely set. If p2079 is also set to 999, then all of the interconnections can be set.
For p0922 = 999 and p2079 < 999 the following applies:
The interconnections contained in the telegram are inhibited. However, the telegram can be extended.

Value: 999: Free telegram configuration with BICO
Dependency: Refer to: p0922

p2080[0...15] BI: Binector-connector converter status word 1 / Bin/con ZSW1

CU_S110-DP, CU_S110-CAN, CU_S110-PN, SERVO_S110-DP, SERVO_S110-CAN, SERVO_S110-PN

Can be changed: U, T	**Calculated:** -	**Access level:** 3
Data type: Unsigned32 / Binary	**Dyn. index:** -	**Func. diagram:** 2472
P-Group: Communications	**Unit group:** -	**Unit selection:** -
Not for motor type: -	**Scaling:** -	**Expert list:** 1
Min	**Max**	**Factory setting**
-	-	0

Description: Selects bits to be sent to the PROFIdrive controller.
The individual bits are combined to form status word 1.

Index:
[0] = Bit 0
[1] = Bit 1
[2] = Bit 2
[3] = Bit 3
[4] = Bit 4
[5] = Bit 5
[6] = Bit 6
[7] = Bit 7
[8] = Bit 8
[9] = Bit 9
[10] = Bit 10
[11] = Bit 11
[12] = Bit 12
[13] = Bit 13
[14] = Bit 14
[15] = Bit 15

Dependency: Refer to: p2088, r2089
Notice: The parameter may be protected as a result of p0922 or p2079 and cannot be changed.

p2081[0...15] BI: Binector-connector converter status word 2 / Bin/con ZSW2

CU_S110-DP, CU_S110-CAN, CU_S110-PN, SERVO_S110-DP, SERVO_S110-CAN, SERVO_S110-PN

Can be changed: U, T	**Calculated:** -	**Access level:** 3
Data type: Unsigned32 / Binary	**Dyn. index:** -	**Func. diagram:** 2472
P-Group: Communications	**Unit group:** -	**Unit selection:** -
Not for motor type: -	**Scaling:** -	**Expert list:** 1
Min	**Max**	**Factory setting**
-	-	0

Description: Selects bits to be sent to the PROFIdrive controller.
The individual bits are combined to form status word 2.

Index:
[0] = Bit 0
[1] = Bit 1
[2] = Bit 2
[3] = Bit 3
[4] = Bit 4
[5] = Bit 5
[6] = Bit 6
[7] = Bit 7
[8] = Bit 8
[9] = Bit 9
[10] = Bit 10
[11] = Bit 11
[12] = Bit 12
[13] = Bit 13
[14] = Bit 14
[15] = Bit 15

Dependency: Refer to: p2088, r2089
Notice: The parameter may be protected as a result of p0922 or p2079 and cannot be changed.

Note: For clock synchronous operation, bit 12 to 15 to transfer the sign-of-life are reserved in status word 2 - and may not be freely interconnected.

p2082[0...15] BI: Binector-connector converter status word 3 / Bin/con ZSW3

CU_S110-DP, CU_S110-CAN, CU_S110-PN, SERVO_S110-DP, SERVO_S110-CAN, SERVO_S110-PN

Can be changed: U, T	**Calculated:** -	**Access level:** 3
Data type: Unsigned32 / Binary	**Dyn. index:** -	**Func. diagram:** 2472
P-Group: Communications	**Unit group:** -	**Unit selection:** -
Not for motor type: -	**Scaling:** -	**Expert list:** 1
Min	**Max**	**Factory setting**
-	-	0

Description: Selects bits to be sent to the PROFIdrive controller.
The individual bits are combined to form free status word 3.

Index:
[0] = Bit 0
[1] = Bit 1
[2] = Bit 2
[3] = Bit 3
[4] = Bit 4
[5] = Bit 5
[6] = Bit 6
[7] = Bit 7
[8] = Bit 8
[9] = Bit 9
[10] = Bit 10
[11] = Bit 11
[12] = Bit 12
[13] = Bit 13
[14] = Bit 14
[15] = Bit 15

Dependency: Refer to: p2088, r2089

Notice: The parameter may be protected as a result of p0922 or p2079 and cannot be changed.

p2083[0...15] BI: Binector-connector converter status word 4 / Bin/con ZSW4

CU_S110-DP, CU_S110-CAN, CU_S110-PN, SERVO_S110-DP, SERVO_S110-CAN, SERVO_S110-PN

Can be changed: U, T	**Calculated:** -	**Access level:** 3
Data type: Unsigned32 / Binary	**Dyn. index:** -	**Func. diagram:** 2472
P-Group: Communications	**Unit group:** -	**Unit selection:** -
Not for motor type: -	**Scaling:** -	**Expert list:** 1
Min	**Max**	**Factory setting**
-	-	0

Description: Selects bits to be sent to the PROFIdrive controller.
The individual bits are combined to form free status word 4.

Index:
[0] = Bit 0
[1] = Bit 1
[2] = Bit 2
[3] = Bit 3
[4] = Bit 4
[5] = Bit 5
[6] = Bit 6
[7] = Bit 7
[8] = Bit 8
[9] = Bit 9
[10] = Bit 10
[11] = Bit 11
[12] = Bit 12
[13] = Bit 13
[14] = Bit 14
[15] = Bit 15

Dependency: Refer to: p2088, r2089

p2084[0...15] BI: Binector-connector converter status word 5 / Bin/con ZSW5

CU_S110-DP, CU_S110-CAN, CU_S110-PN, SERVO_S110-DP, SERVO_S110-CAN, SERVO_S110-PN

Can be changed: U, T	**Calculated:** -	**Access level:** 3
Data type: Unsigned32 / Binary	**Dyn. index:** -	**Func. diagram:** 2472
P-Group: Communications	**Unit group:** -	**Unit selection:** -
Not for motor type: -	**Scaling:** -	**Expert list:** 1
Min	**Max**	**Factory setting**
-	-	0

Description: Selects bits to be sent to the PROFIdrive controller.
The individual bits are combined to form free status word 5.

Index:
[0] = Bit 0
[1] = Bit 1
[2] = Bit 2
[3] = Bit 3
[4] = Bit 4
[5] = Bit 5
[6] = Bit 6
[7] = Bit 7
[8] = Bit 8
[9] = Bit 9
[10] = Bit 10
[11] = Bit 11
[12] = Bit 12
[13] = Bit 13
[14] = Bit 14
[15] = Bit 15

Dependency: Refer to: p2088, r2089

p2088[0...4] Invert binector-connector converter status word / Bin/con ZSW inv

CU_S110-DP, CU_S110-CAN, CU_S110-PN, SERVO_S110-DP, SERVO_S110-CAN, SERVO_S110-PN

Can be changed: U, T	**Calculated:** -	**Access level:** 3
Data type: Unsigned16	**Dyn. index:** -	**Func. diagram:** 2472
P-Group: Communications	**Unit group:** -	**Unit selection:** -
Not for motor type: -	**Scaling:** -	**Expert list:** 1
Min	**Max**	**Factory setting**
-	-	0000 0000 0000 0000 bin

Description: Setting to invert the individual binector inputs of the binector connector converter.

Index:
[0] = Status word 1
[1] = Status word 2
[2] = Free status word 3
[3] = Free status word 4
[4] = Free status word 5

Bit field:

Bit	Signal name	1 signal	0 signal	FP
00	Bit 0	Inverted	Not inverted	-
01	Bit 1	Inverted	Not inverted	-
02	Bit 2	Inverted	Not inverted	-
03	Bit 3	Inverted	Not inverted	-
04	Bit 4	Inverted	Not inverted	-
05	Bit 5	Inverted	Not inverted	-
06	Bit 6	Inverted	Not inverted	-
07	Bit 7	Inverted	Not inverted	-
08	Bit 8	Inverted	Not inverted	-
09	Bit 9	Inverted	Not inverted	-
10	Bit 10	Inverted	Not inverted	-
11	Bit 11	Inverted	Not inverted	-
12	Bit 12	Inverted	Not inverted	-
13	Bit 13	Inverted	Not inverted	-
14	Bit 14	Inverted	Not inverted	-
15	Bit 15	Inverted	Not inverted	-

Dependency: Refer to: p2080, p2081, p2082, p2083, r2089

r2089[0...4] CO: Send binector-connector converter status word / Bin/con ZSW send

CU_S110-DP, CU_S110-CAN, CU_S110-PN, SERVO_S110-DP, SERVO_S110-CAN, SERVO_S110-PN

Can be changed: - **Calculated:** - **Access level:** 3
Data type: Unsigned16 **Dyn. index:** - **Func. diagram:** 2472
P-Group: Communications **Unit group:** - **Unit selection:** -
Not for motor type: - **Scaling:** - **Expert list:** 1

Min	Max	Factory setting
-	-	-

Description: Connector output to interconnect the status words to a PZD send word.

Index:
[0] = Status word 1
[1] = Status word 2
[2] = Free status word 3
[3] = Free status word 4
[4] = Free status word 5

Bit field:

Bit	Signal name	1 signal	0 signal	FP
00	Bit 0	ON	OFF	-
01	Bit 1	ON	OFF	-
02	Bit 2	ON	OFF	-
03	Bit 3	ON	OFF	-
04	Bit 4	ON	OFF	-
05	Bit 5	ON	OFF	-
06	Bit 6	ON	OFF	-
07	Bit 7	ON	OFF	-
08	Bit 8	ON	OFF	-
09	Bit 9	ON	OFF	-
10	Bit 10	ON	OFF	-
11	Bit 11	ON	OFF	-
12	Bit 12	ON	OFF	-
13	Bit 13	ON	OFF	-
14	Bit 14	ON	OFF	-
15	Bit 15	ON	OFF	-

Dependency: Refer to: p2051, p2080, p2081, p2082, p2083

Note: r2089 together with p2080 to p2084 forms five binector-connector converters.

r2090.0...15 BO: IF1 PROFIBUS PZD1 receive bit-serial / IF1 PZD1 recv bitw

CU_S110-DP, CU_S110-CAN, CU_S110-PN, SERVO_S110-DP, SERVO_S110-CAN, SERVO_S110-PN

Can be changed: - **Calculated:** - **Access level:** 3
Data type: Unsigned16 **Dyn. index:** - **Func. diagram:** 2468
P-Group: Communications **Unit group:** - **Unit selection:** -
Not for motor type: - **Scaling:** - **Expert list:** 1

Min	Max	Factory setting
-	-	-

Description: Binector output for bit-serial interconnection of PZD1 (normally control word 1) received from the PROFIdrive controller.

Bit field:

Bit	Signal name	1 signal	0 signal	FP
00	Bit 0	ON	OFF	-
01	Bit 1	ON	OFF	-
02	Bit 2	ON	OFF	-
03	Bit 3	ON	OFF	-
04	Bit 4	ON	OFF	-
05	Bit 5	ON	OFF	-
06	Bit 6	ON	OFF	-
07	Bit 7	ON	OFF	-
08	Bit 8	ON	OFF	-
09	Bit 9	ON	OFF	-
10	Bit 10	ON	OFF	-
11	Bit 11	ON	OFF	-
12	Bit 12	ON	OFF	-
13	Bit 13	ON	OFF	-
14	Bit 14	ON	OFF	-
15	Bit 15	ON	OFF	-

Note: IF1: Interface 1

r2091.0...15 BO: IF1 PROFIdrive PZD2 receive bit-serial / IF1 PZD2 recv bitw

CU_S110-DP, CU_S110-CAN, CU_S110-PN, SERVO_S110-DP, SERVO_S110-CAN, SERVO_S110-PN

Can be changed: -	**Calculated:** -	**Access level:** 3
Data type: Unsigned16	**Dyn. index:** -	**Func. diagram:** 2468
P-Group: Communications	**Unit group:** -	**Unit selection:** -
Not for motor type: -	**Scaling:** -	**Expert list:** 1
Min	**Max**	**Factory setting**
-	-	-

Description: Binector output for bit-serial interconnection of PZD2 received from the PROFIdrive controller.

Bit field:

Bit	Signal name	1 signal	0 signal	FP
00	Bit 0	ON	OFF	-
01	Bit 1	ON	OFF	-
02	Bit 2	ON	OFF	-
03	Bit 3	ON	OFF	-
04	Bit 4	ON	OFF	-
05	Bit 5	ON	OFF	-
06	Bit 6	ON	OFF	-
07	Bit 7	ON	OFF	-
08	Bit 8	ON	OFF	-
09	Bit 9	ON	OFF	-
10	Bit 10	ON	OFF	-
11	Bit 11	ON	OFF	-
12	Bit 12	ON	OFF	-
13	Bit 13	ON	OFF	-
14	Bit 14	ON	OFF	-
15	Bit 15	ON	OFF	-

Note: IF1: Interface 1

r2092.0...15 BO: IF1 PROFIdrive PZD3 receive bit-serial / IF1 PZD3 recv bitw

CU_S110-DP, CU_S110-CAN, CU_S110-PN, SERVO_S110-DP, SERVO_S110-CAN, SERVO_S110-PN

Can be changed: -	**Calculated:** -	**Access level:** 3
Data type: Unsigned16	**Dyn. index:** -	**Func. diagram:** 2468
P-Group: Communications	**Unit group:** -	**Unit selection:** -
Not for motor type: -	**Scaling:** -	**Expert list:** 1
Min	**Max**	**Factory setting**
-	-	-

Description: Binector output for bit-serial interconnection of PZD3 received from the PROFIdrive controller.

Bit field:

Bit	Signal name	1 signal	0 signal	FP
00	Bit 0	ON	OFF	-
01	Bit 1	ON	OFF	-
02	Bit 2	ON	OFF	-
03	Bit 3	ON	OFF	-
04	Bit 4	ON	OFF	-
05	Bit 5	ON	OFF	-
06	Bit 6	ON	OFF	-
07	Bit 7	ON	OFF	-
08	Bit 8	ON	OFF	-
09	Bit 9	ON	OFF	-
10	Bit 10	ON	OFF	-
11	Bit 11	ON	OFF	-
12	Bit 12	ON	OFF	-
13	Bit 13	ON	OFF	-
14	Bit 14	ON	OFF	-
15	Bit 15	ON	OFF	-

Note: IF1: Interface 1

r2093.0...15 BO: IF1 PROFIdrive PZD4 receive bit-serial / IF1 PZD4 recv bitw

CU_S110-DP, CU_S110-CAN, CU_S110-PN, SERVO_S110-DP, SERVO_S110-CAN, SERVO_S110-PN

Can be changed: -	**Calculated:** -	**Access level:** 3
Data type: Unsigned16	**Dyn. index:** -	**Func. diagram:** 2468
P-Group: Communications	**Unit group:** -	**Unit selection:** -
Not for motor type: -	**Scaling:** -	**Expert list:** 1
Min	**Max**	**Factory setting**
-	-	-

Description: Binector output for bit-serial interconnection of PZD4 (normally control word 2) received from the PROFIdrive controller.

Bit field:

Bit	Signal name	1 signal	0 signal	FP
00	Bit 0	ON	OFF	-
01	Bit 1	ON	OFF	-
02	Bit 2	ON	OFF	-
03	Bit 3	ON	OFF	-
04	Bit 4	ON	OFF	-
05	Bit 5	ON	OFF	-
06	Bit 6	ON	OFF	-
07	Bit 7	ON	OFF	-
08	Bit 8	ON	OFF	-
09	Bit 9	ON	OFF	-
10	Bit 10	ON	OFF	-
11	Bit 11	ON	OFF	-
12	Bit 12	ON	OFF	-
13	Bit 13	ON	OFF	-
14	Bit 14	ON	OFF	-
15	Bit 15	ON	OFF	-

Note: IF1: Interface 1

r2094.0...15 BO: Connector-binector converter binector output / Con/bin outp

SERVO_S110-DP, SERVO_S110-CAN, SERVO_S110-PN

Can be changed: -	**Calculated:** -	**Access level:** 3
Data type: Unsigned16	**Dyn. index:** -	**Func. diagram:** 2468
P-Group: Communications	**Unit group:** -	**Unit selection:** -
Not for motor type: -	**Scaling:** -	**Expert list:** 1
Min	**Max**	**Factory setting**
-	-	-

Description: Binector output for bit-serial onward interconnection of a PZD word received from the PROFIdrive controller.
The PZD is selected via p2099[0].

Bit field:

Bit	Signal name	1 signal	0 signal	FP
00	Bit 0	ON	OFF	-
01	Bit 1	ON	OFF	-
02	Bit 2	ON	OFF	-
03	Bit 3	ON	OFF	-
04	Bit 4	ON	OFF	-
05	Bit 5	ON	OFF	-
06	Bit 6	ON	OFF	-
07	Bit 7	ON	OFF	-
08	Bit 8	ON	OFF	-
09	Bit 9	ON	OFF	-
10	Bit 10	ON	OFF	-
11	Bit 11	ON	OFF	-
12	Bit 12	ON	OFF	-
13	Bit 13	ON	OFF	-
14	Bit 14	ON	OFF	-
15	Bit 15	ON	OFF	-

Dependency: Refer to: p2099

r2095.0...15 BO: Connector-binector converter binector output / Con/bin outp

SERVO_S110-DP, SERVO_S110-CAN, SERVO_S110-PN

Can be changed: -	**Calculated:** -	**Access level:** 3
Data type: Unsigned16	**Dyn. index:** -	**Func. diagram:** 2468
P-Group: Communications	**Unit group:** -	**Unit selection:** -
Not for motor type: -	**Scaling:** -	**Expert list:** 1
Min	**Max**	**Factory setting**
-	-	-

Description: Binector output for bit-serial interconnection of a PZD word received from the PROFIdrive controller.
The PZD is selected via p2099[1].

Bit field:

Bit	Signal name	1 signal	0 signal	FP
00	Bit 0	ON	OFF	-
01	Bit 1	ON	OFF	-
02	Bit 2	ON	OFF	-
03	Bit 3	ON	OFF	-
04	Bit 4	ON	OFF	-
05	Bit 5	ON	OFF	-
06	Bit 6	ON	OFF	-
07	Bit 7	ON	OFF	-
08	Bit 8	ON	OFF	-
09	Bit 9	ON	OFF	-
10	Bit 10	ON	OFF	-
11	Bit 11	ON	OFF	-
12	Bit 12	ON	OFF	-
13	Bit 13	ON	OFF	-
14	Bit 14	ON	OFF	-
15	Bit 15	ON	OFF	-

Dependency: Refer to: p2099

p2098[0...1] Inverter connector-binector converter binector output / Con/bin outp inv

SERVO_S110-DP, SERVO_S110-CAN, SERVO_S110-PN

Can be changed: U, T	**Calculated:** -	**Access level:** 3
Data type: Unsigned16	**Dyn. index:** -	**Func. diagram:** 2468
P-Group: Communications	**Unit group:** -	**Unit selection:** -
Not for motor type: -	**Scaling:** -	**Expert list:** 1
Min	**Max**	**Factory setting**
-	-	0000 0000 0000 0000 bin

Description: Setting to invert the individual binector outputs of the connector-binector converter.
Using p2098[0], the signals of CI: p2099[0] are influenced.
Using p2098[1], the signals of CI: p2099[1] are influenced.

Bit field:

Bit	Signal name	1 signal	0 signal	FP
00	Bit 0	Inverted	Not inverted	-
01	Bit 1	Inverted	Not inverted	-
02	Bit 2	Inverted	Not inverted	-
03	Bit 3	Inverted	Not inverted	-
04	Bit 4	Inverted	Not inverted	-
05	Bit 5	Inverted	Not inverted	-
06	Bit 6	Inverted	Not inverted	-
07	Bit 7	Inverted	Not inverted	-
08	Bit 8	Inverted	Not inverted	-
09	Bit 9	Inverted	Not inverted	-
10	Bit 10	Inverted	Not inverted	-
11	Bit 11	Inverted	Not inverted	-
12	Bit 12	Inverted	Not inverted	-
13	Bit 13	Inverted	Not inverted	-
14	Bit 14	Inverted	Not inverted	-
15	Bit 15	Inverted	Not inverted	-

Dependency: Refer to: r2094, r2095, p2099

p2099[0...1] CI: Connector-binector converter signal source / Con/bin S_src

SERVO_S110-DP, SERVO_S110-CAN, SERVO_S110-PN

Can be changed: U, T	**Calculated:** -	**Access level:** 3
Data type: Unsigned32 / Integer16	**Dyn. index:** -	**Func. diagram:** 2468
P-Group: Communications	**Unit group:** -	**Unit selection:** -
Not for motor type: -	**Scaling:** -	**Expert list:** 1
Min	**Max**	**Factory setting**
-	-	0

Description: Sets the signal source for the connector-binector converter.
A PZD receive word can be selected as signal source. The signals are available to be serially passed-on (interconnection).

Dependency: Refer to: r2094, r2095

Note: From the signal source set via the connector input, the corresponding lower 16 bits are converted.
p2099[0...1] together with r2094.0...15 and r2095.0...15 forms two connector-binector converters:
Connector input p2099[0] to binector output in r2094.0...15
Connector input p2099[1] to binector output in r2095.0...15

p2100[0...19] Setting the fault number for fault response / F_no F response

SERVO_S110-DP, SERVO_S110-CAN, SERVO_S110-PN

Can be changed: U, T	**Calculated:** -	**Access level:** 3
Data type: Unsigned16	**Dyn. index:** -	**Func. diagram:** 1750, 8075
P-Group: Messages	**Unit group:** -	**Unit selection:** -
Not for motor type: -	**Scaling:** -	**Expert list:** 1
Min	**Max**	**Factory setting**
0	65535	0

Description: Selects the faults for which the fault response should be changed

Dependency: The fault is selected and the required response is set under the same index.
Refer to: p2101

Notice: For the following cases, it is not possible to re-parameterize the fault response to a fault:
- if there is no existing fault number.
- the message type is not "fault" (F).
- when a fault is present.

p2101[0...19] Setting the fault response / Fault response

SERVO_S110-DP, SERVO_S110-CAN, SERVO_S110-PN

Can be changed: U, T	**Calculated:** -	**Access level:** 3
Data type: Integer16	**Dyn. index:** -	**Func. diagram:** 1750, 8075
P-Group: Messages	**Unit group:** -	**Unit selection:** -
Not for motor type: -	**Scaling:** -	**Expert list:** 1
Min	**Max**	**Factory setting**
0	7	0

Description: Sets the fault response for the selected fault.

Value:
0: NONE
1: OFF1
2: OFF2
3: OFF3
4: STOP1 (being developed)
5: STOP2
6: DC braking
7: ENCODER (p0491)

Dependency: The fault is selected and the required response is set under the same index.
Refer to: p2100

Notice: It is not possible to re-parameterize the response to a specific fault for faults that are already present (queued).

Note: The fault response can only be changed for faults with the appropriate identification (see the List Manual, chapter "Faults and alarms").
Example:
F12345 and fault response = OFF3 (OFF1, OFF2, NONE)
--> The default fault response OFF3 can be changed to OFF1, OFF2 or NONE.
Re value = 1 (OFF1):
Braking along the ramp-function generator down ramp followed by a pulse inhibit.
Re value = 2 (OFF2):
Internal/external pulse inhibit.
Re value = 3 (OFF3):
Braking along the OFF3 down ramp followed by a pulse inhibit.
Re value = 5 (STOP2):
n_set = 0
Re Value = 6 (DCBRK):
The value can only be set for all motor data sets when p1231 = 3, 4.
a) This function is not supported for synchronous motors (p0300 = 2xx, 4xx).
b) For induction motors (p0300 = 1xx), the DC braking is initiated.
Re value = 7 (ENCODER (p0491)):
The fault response set in p0491 is executed if applicable.

p2102 BI: Acknowledge all faults / Ackn all faults

CU_S110-DP, CU_S110-CAN, CU_S110-PN

Can be changed: U, T	**Calculated:** -	**Access level:** 3
Data type: Unsigned32 / Binary	**Dyn. index:** -	**Func. diagram:** 2546, 8060
P-Group: Messages	**Unit group:** -	**Unit selection:** -
Not for motor type: -	**Scaling:** -	**Expert list:** 1
Min	**Max**	**Factory setting**
-	-	0

Description: Sets the signal source to acknowledge all faults at all drive objects of the drive system.
Note: A fault acknowledgement is triggered with a 0/1 signal.

p2103[0...n] BI: 1. Acknowledge faults / 1. Acknowledge

SERVO_S110-DP, SERVO_S110-CAN, SERVO_S110-PN

Can be changed: U, T	**Calculated:** -	**Access level:** 3
Data type: Unsigned32 / Binary	**Dyn. index:** CDS, p0170	**Func. diagram:** 2441, 2442, 2443, 2447, 2475, 2546, 9220, 9677, 9678
P-Group: Messages	**Unit group:** -	**Unit selection:** -
Not for motor type: -	**Scaling:** -	**Expert list:** 1
Min	**Max**	**Factory setting**
-	-	0

Description: Sets the first signal source to acknowledge faults.
Notice: The parameter may be protected as a result of p0922 or p2079 and cannot be changed.
Note: A fault acknowledgement is triggered with a 0/1 signal.

p2104[0...n] BI: 2. Acknowledge faults / 2. Acknowledge

SERVO_S110-DP, SERVO_S110-CAN, SERVO_S110-PN

Can be changed: U, T	**Calculated:** -	**Access level:** 3
Data type: Unsigned32 / Binary	**Dyn. index:** CDS, p0170	**Func. diagram:** 2546, 8060
P-Group: Messages	**Unit group:** -	**Unit selection:** -
Not for motor type: -	**Scaling:** -	**Expert list:** 1
Min	**Max**	**Factory setting**
-	-	0

Description: Sets the second signal source to acknowledge faults.
Note: A fault acknowledgement is triggered with a 0/1 signal.

p2105[0...n] BI: 3. Acknowledge faults / 3. Acknowledge

SERVO_S110-DP, SERVO_S110-CAN, SERVO_S110-PN

Can be changed: U, T	**Calculated:** -	**Access level:** 3
Data type: Unsigned32 / Binary	**Dyn. index:** CDS, p0170	**Func. diagram:** 2546, 8060
P-Group: Messages	**Unit group:** -	**Unit selection:** -
Not for motor type: -	**Scaling:** -	**Expert list:** 1
Min	**Max**	**Factory setting**
-	-	0

Description: Sets the third signal source to acknowledge faults.

Note: A fault acknowledgement is triggered with a 0/1 signal.

p2106[0...n] BI: External fault 1 / External fault 1

SERVO_S110-DP, SERVO_S110-CAN, SERVO_S110-PN

Can be changed: U, T	**Calculated:** -	**Access level:** 3
Data type: Unsigned32 / Binary	**Dyn. index:** CDS, p0170	**Func. diagram:** 2546
P-Group: Messages	**Unit group:** -	**Unit selection:** -
Not for motor type: -	**Scaling:** -	**Expert list:** 1
Min	**Max**	**Factory setting**
-	-	1

Description: Sets the signal source for external fault 1.

Dependency: Refer to: F07860

Note: An external fault is triggered with a 1/0 signal.
If this fault is output at the Control Unit, then it is transferred to all existing drive objects.

p2107[0...n] BI: External fault 2 / External fault 2

SERVO_S110-DP, SERVO_S110-CAN, SERVO_S110-PN

Can be changed: U, T	**Calculated:** -	**Access level:** 3
Data type: Unsigned32 / Binary	**Dyn. index:** CDS, p0170	**Func. diagram:** 2546
P-Group: Messages	**Unit group:** -	**Unit selection:** -
Not for motor type: -	**Scaling:** -	**Expert list:** 1
Min	**Max**	**Factory setting**
-	-	1

Description: Sets the signal source for external fault 2.

Dependency: Refer to: F07861

Note: An external fault is triggered with a 1/0 signal.
If this fault is output at the Control Unit, then it is transferred to all existing drive objects.

p2108[0...n] BI: External fault 3 / External fault 3

SERVO_S110-DP, SERVO_S110-CAN, SERVO_S110-PN

Can be changed: U, T	**Calculated:** -	**Access level:** 3
Data type: Unsigned32 / Binary	**Dyn. index:** CDS, p0170	**Func. diagram:** 2546
P-Group: Messages	**Unit group:** -	**Unit selection:** -
Not for motor type: -	**Scaling:** -	**Expert list:** 1
Min	**Max**	**Factory setting**
-	-	1

Description: Sets the signal source for external fault 3.
External fault 3 is initiated by the following AND logic operation:
- BI: p2108 negated
- BI: p3111
- BI: p3112 negated

Dependency: Refer to: F07862

Note: An external fault is triggered with a 1/0 signal.
If this fault is output at the Control Unit, then it is transferred to all existing drive objects.

r2109[0...63] Fault time removed in milliseconds / t_flt resolved ms

CU_S110-DP, CU_S110-CAN, CU_S110-PN, SERVO_S110-DP, SERVO_S110-CAN, SERVO_S110-PN

Can be changed: -	**Calculated:** -	**Access level:** 3
Data type: Unsigned32	**Dyn. index:** -	**Func. diagram:** 1750, 8060
P-Group: Messages	**Unit group:** -	**Unit selection:** -
Not for motor type: -	**Scaling:** -	**Expert list:** 1
Min	**Max**	**Factory setting**
- [ms]	- [ms]	- [ms]

Description: Displays the system runtime in milliseconds when the fault was removed.

Dependency: Refer to: r0945, r0947, r0948, r0949, r2114, r2130, r2133, r2136, r3115, r3120, r3122

Notice: The time comprises r2136 (days) and r2109 (milliseconds).

Note: The buffer parameters are cyclically updated in the background (refer to status signal in r2139).
The structure of the fault buffer and the assignment of the indices is shown in r0945.

r2110[0...63] Alarm number / Alarm number

CU_S110-DP, CU_S110-CAN, CU_S110-PN, SERVO_S110-DP, SERVO_S110-CAN, SERVO_S110-PN

Can be changed: -	**Calculated:** -	**Access level:** 2
Data type: Unsigned16	**Dyn. index:** -	**Func. diagram:** 8065
P-Group: Messages	**Unit group:** -	**Unit selection:** -
Not for motor type: -	**Scaling:** -	**Expert list:** 1
Min	**Max**	**Factory setting**
-	-	-

Description: This parameter is identical to r2122.

p2111 Alarm counter / Alarm counter

CU_S110-DP, CU_S110-CAN, CU_S110-PN, SERVO_S110-DP, SERVO_S110-CAN, SERVO_S110-PN

Can be changed: U, T	**Calculated:** -	**Access level:** 3
Data type: Unsigned16	**Dyn. index:** -	**Func. diagram:** 1750, 8065
P-Group: Messages	**Unit group:** -	**Unit selection:** -
Not for motor type: -	**Scaling:** -	**Expert list:** 1
Min	**Max**	**Factory setting**
0	65535	0

Description: Number of alarms that have occurred after the last reset.

Dependency: When p2111 is set to 0, the following is initiated:
- all of the alarms of the alarm buffer that have gone [0...7] are transferred into the alarm history [8...63].
- the alarm buffer [0...7] is deleted.
Refer to: r2110, r2122, r2123, r2124, r2125

Note: The parameter is reset to 0 at POWER ON.

p2112[0...n] BI: External alarm 1 / External alarm 1

SERVO_S110-DP, SERVO_S110-CAN, SERVO_S110-PN

Can be changed: U, T	**Calculated:** -	**Access level:** 3
Data type: Unsigned32 / Binary	**Dyn. index:** CDS, p0170	**Func. diagram:** 2546
P-Group: Messages	**Unit group:** -	**Unit selection:** -
Not for motor type: -	**Scaling:** -	**Expert list:** 1
Min	**Max**	**Factory setting**
-	-	1

Description: Sets the signal source for external alarm 1.

Dependency: Refer to: A07850

Note: An external alarm is triggered with a 1/0 signal.

r2114[0...1] System runtime total / Sys runtime tot

CU_S110-DP, CU_S110-CAN, CU_S110-PN

Can be changed: -	**Calculated:** -	**Access level:** 3
Data type: Unsigned32	**Dyn. index:** -	**Func. diagram:** -
P-Group: Messages	**Unit group:** -	**Unit selection:** -
Not for motor type: -	**Scaling:** -	**Expert list:** 1
Min	**Max**	**Factory setting**
-	-	-

Description: Displays the total system runtime for the drive unit.
The time comprises r2114[0] (milliseconds) and r2114[1] (days).
After r2114[0] has reached a value of 86.400.000 ms (24 hours) this value is reset and r2114[1] is incremented.

Index: [0] = Milliseconds
[1] = Days

Dependency: Refer to: r0948, r2109, r2123, r2125, r2130, r2136, r2145, r2146

Note: The time in r2114 is used to display the times for faults and alarms.
When the electronic power supply is switched out, the counter values are saved.
After the drive unit is powered up, the counter continues to run with the last value that was saved.

p2116[0...n] BI: External alarm 2 / External alarm 2

SERVO_S110-DP, SERVO_S110-CAN, SERVO_S110-PN

Can be changed: U, T	**Calculated:** -	**Access level:** 3
Data type: Unsigned32 / Binary	**Dyn. index:** CDS, p0170	**Func. diagram:** 2546
P-Group: Messages	**Unit group:** -	**Unit selection:** -
Not for motor type: -	**Scaling:** -	**Expert list:** 1
Min	**Max**	**Factory setting**
-	-	1

Description: Sets the signal source for external alarm 2.

Dependency: Refer to: A07851

Note: An external alarm is triggered with a 1/0 signal.

p2117[0...n] BI: External alarm 3 / External alarm 3

SERVO_S110-DP, SERVO_S110-CAN, SERVO_S110-PN

Can be changed: U, T	**Calculated:** -	**Access level:** 3
Data type: Unsigned32 / Binary	**Dyn. index:** CDS, p0170	**Func. diagram:** 2546
P-Group: Messages	**Unit group:** -	**Unit selection:** -
Not for motor type: -	**Scaling:** -	**Expert list:** 1
Min	**Max**	**Factory setting**
-	-	1

Description: Sets the signal source for external alarm 3.

Dependency: Refer to: A07852

Note: An external alarm is triggered with a 1/0 signal.

p2118[0...19] Sets the message number for message type. / Msg_no Msg_type

SERVO_S110-DP, SERVO_S110-CAN, SERVO_S110-PN

Can be changed: U, T	**Calculated:** -	**Access level:** 3
Data type: Unsigned16	**Dyn. index:** -	**Func. diagram:** 1750, 8075
P-Group: Messages	**Unit group:** -	**Unit selection:** -
Not for motor type: -	**Scaling:** -	**Expert list:** 1
Min	**Max**	**Factory setting**
0	65535	0

Description: Selects faults or alarms for which the message type should be changed.

Dependency: Selects the fault or alarm selection and sets the required type of message realized under the same index.
Refer to: p2119

Notice: It is not possible to re-parameterize the message type in the following cases:
- if there is no existing message number.
- if a message is present.

p2119[0...19] Setting the message type / Message type

SERVO_S110-DP, SERVO_S110-CAN, SERVO_S110-PN

Can be changed: U, T	**Calculated:** -	**Access level:** 3
Data type: Integer16	**Dyn. index:** -	**Func. diagram:** 1750, 8075
P-Group: Messages	**Unit group:** -	**Unit selection:** -
Not for motor type: -	**Scaling:** -	**Expert list:** 1
Min	**Max**	**Factory setting**
1	3	1

Description: Sets the message type for the selected fault or alarm.

Value:
1: Fault (F)
2: Alarm (A)
3: No message (N)

Dependency: Selects the fault or alarm selection and sets the required type of message realized under the same index.
Refer to: p2118

Notice: It is not possible to re-parameterize the message type for the existing faults or alarms.

Note: The message type can only be changed for messages with the appropriate identification.
Example:
F12345(A) --> Fault F12345 can be changed to alarm A12345.
In this case, the message number that may be possibly entered in p2100[0...19] and p2126[0...19] is automatically removed.

r2120 CO: Sum of fault and alarm buffer changes / Sum buffer changed

CU_S110-DP, CU_S110-CAN, CU_S110-PN, SERVO_S110-DP, SERVO_S110-CAN, SERVO_S110-PN

Can be changed: -	**Calculated:** -	**Access level:** 4
Data type: Unsigned16	**Dyn. index:** -	**Func. diagram:** 8065
P-Group: Messages	**Unit group:** -	**Unit selection:** -
Not for motor type: -	**Scaling:** -	**Expert list:** 1
Min	**Max**	**Factory setting**
-	-	-

Description: Displays the sum of all of the fault and alarm buffer changes in the drive unit.

Dependency: Refer to: r0944, r2121

r2121 CO: Counter alarm buffer changes / Alrm buff changed

CU_S110-DP, CU_S110-CAN, CU_S110-PN, SERVO_S110-DP, SERVO_S110-CAN, SERVO_S110-PN

Can be changed: -	**Calculated:** -	**Access level:** 3
Data type: Unsigned16	**Dyn. index:** -	**Func. diagram:** 8065
P-Group: Messages	**Unit group:** -	**Unit selection:** -
Not for motor type: -	**Scaling:** -	**Expert list:** 1
Min	**Max**	**Factory setting**
-	-	-

Description: This counter is incremented every time the alarm buffer changes.

Dependency: Refer to: r2110, r2122, r2123, r2124, r2125

r2122[0...63] Alarm code / Alarm code

CU_S110-DP, CU_S110-CAN, CU_S110-PN, SERVO_S110-DP, SERVO_S110-CAN, SERVO_S110-PN

Can be changed: -	**Calculated:** -	**Access level:** 2
Data type: Unsigned16	**Dyn. index:** -	**Func. diagram:** 1750, 8065
P-Group: Messages	**Unit group:** -	**Unit selection:** -
Not for motor type: -	**Scaling:** -	**Expert list:** 1
Min	**Max**	**Factory setting**
-	-	-

Description: Displays the number of alarms that have occurred.

Dependency: Refer to: r2110, r2123, r2124, r2125, r2134, r2145, r2146, r3121, r3123

Note: The buffer parameters are cyclically updated in the background (refer to status signal in r2139).
Alarm buffer structure (general principle):
r2122[0], r2124[0], r2123[0], r2125[0] --> alarm 1 (the oldest)
. . .
r2122[7], r2124[7], r2123[7], r2125[7] --> Alarm 8 (the latest)
When the alarm buffer is full, the alarms that have gone are entered into the alarm history:
r2122[8], r2124[8], r2123[8], r2125[8] --> Alarm 1 (the latest)
. . .
r2122[63], r2124[63], r2123[63], r2125[63] --> alarm 56 (the oldest)

r2123[0...63] Alarm time received in milliseconds / t_alarm recv ms

CU_S110-DP, CU_S110-CAN, CU_S110-PN, SERVO_S110-DP, SERVO_S110-CAN, SERVO_S110-PN

Can be changed: -	**Calculated:** -	**Access level:** 3
Data type: Unsigned32	**Dyn. index:** -	**Func. diagram:** 1750, 8065
P-Group: Messages	**Unit group:** -	**Unit selection:** -
Not for motor type: -	**Scaling:** -	**Expert list:** 1
Min	**Max**	**Factory setting**
- [ms]	- [ms]	- [ms]

Description: Displays the system runtime in milliseconds when the alarm occurred.
Dependency: Refer to: r2110, r2114, r2122, r2124, r2125, r2134, r2145, r2146, r3121, r3123
Notice: The time comprises r2145 (days) and r2123 (milliseconds).
Note: The buffer parameters are cyclically updated in the background (refer to status signal in r2139).
The structure of the alarm buffer and the assignment of the indices is shown in r2122.

r2124[0...63] Alarm value / Alarm value

CU_S110-DP, CU_S110-CAN, CU_S110-PN, SERVO_S110-DP, SERVO_S110-CAN, SERVO_S110-PN

Can be changed: -	**Calculated:** -	**Access level:** 3
Data type: Integer32	**Dyn. index:** -	**Func. diagram:** 1750, 8065
P-Group: Messages	**Unit group:** -	**Unit selection:** -
Not for motor type: -	**Scaling:** -	**Expert list:** 1
Min	**Max**	**Factory setting**
-	-	-

Description: Displays additional information about the active alarm (as integer number).
Dependency: Refer to: r2110, r2122, r2123, r2125, r2134, r2145, r2146, r3121, r3123
Note: The buffer parameters are cyclically updated in the background (refer to status signal in r2139).
The structure of the alarm buffer and the assignment of the indices is shown in r2122.

r2125[0...63] Alarm time removed in milliseconds / t_alarm res ms

CU_S110-DP, CU_S110-CAN, CU_S110-PN, SERVO_S110-DP, SERVO_S110-CAN, SERVO_S110-PN

Can be changed: -	**Calculated:** -	**Access level:** 3
Data type: Unsigned32	**Dyn. index:** -	**Func. diagram:** 1750, 8065
P-Group: Messages	**Unit group:** -	**Unit selection:** -
Not for motor type: -	**Scaling:** -	**Expert list:** 1
Min	**Max**	**Factory setting**
- [ms]	- [ms]	- [ms]

Description: Displays the system runtime in milliseconds when the alarm was cleared.
Dependency: Refer to: r2110, r2114, r2122, r2123, r2124, r2134, r2145, r2146, r3121, r3123
Notice: The time comprises r2146 (days) and r2125 (milliseconds).
Note: The buffer parameters are cyclically updated in the background (refer to status signal in r2139).
The structure of the alarm buffer and the assignment of the indices is shown in r2122.

p2126[0...19] Setting fault number for acknowledge mode / Fault_no ackn_mode

SERVO_S110-DP, SERVO_S110-CAN, SERVO_S110-PN

Can be changed: U, T	**Calculated:** -	**Access level:** 3
Data type: Unsigned16	**Dyn. index:** -	**Func. diagram:** 1750, 8075
P-Group: Messages	**Unit group:** -	**Unit selection:** -
Not for motor type: -	**Scaling:** -	**Expert list:** 1
Min	**Max**	**Factory setting**
0	65535	0

Description: Selects the faults for which the acknowledge mode is to be changed

Dependency: Selects the faults and sets the required acknowledge mode realized under the same index
Refer to: p2127

Notice: It is not possible to re-parameterize the acknowledge mode of a fault in the following cases:
- if there is no existing fault number.
- the message type is not "fault" (F).
- when a fault is present.

p2127[0...19] Sets acknowledgement mode / Acknowledge mode

SERVO_S110-DP, SERVO_S110-CAN, SERVO_S110-PN

Can be changed: U, T	**Calculated:** -	**Access level:** 3
Data type: Integer16	**Dyn. index:** -	**Func. diagram:** 1750, 8075
P-Group: Messages	**Unit group:** -	**Unit selection:** -
Not for motor type: -	**Scaling:** -	**Expert list:** 1
Min	**Max**	**Factory setting**
1	3	1

Description: Sets the acknowledge mode for selected fault.

Value:
1: Acknowledgment only using POWER ON
2: Ack IMMEDIATELY after the fault cause has been removed
3: Acknowledgement only for PULSE INHIBIT

Dependency: Selects the faults and sets the required acknowledge mode realized under the same index
Refer to: p2126

Notice: It is not possible to re-parameterize the acknowledge mode of a fault in the following cases:
- if there is no existing fault number.
- the message type is not "fault" (F).
- when a fault is present.

Note: The acknowledge mode can only be changed for faults with the appropriate identification.
Example:
F12345 and acknowledge mode = IMMEDIATELY (POWER ON)
--> The acknowledge mode can be changed from IMMEDIATELY to POWER ON.

p2128[0...15] Selecting fault/alarm code for trigger / Message trigger

CU_S110-DP, CU_S110-CAN, CU_S110-PN, SERVO_S110-DP, SERVO_S110-CAN, SERVO_S110-PN

Can be changed: U, T	**Calculated:** -	**Access level:** 3
Data type: Unsigned16	**Dyn. index:** -	**Func. diagram:** 1750, 8070
P-Group: Messages	**Unit group:** -	**Unit selection:** -
Not for motor type: -	**Scaling:** -	**Expert list:** 1
Min	**Max**	**Factory setting**
0	65535	0

Description: Selects faults or alarms which can be used as trigger.

Dependency: Refer to: r2129

r2129.0...15 CO/BO: Trigger word for faults and alarms / Trigger word

CU_S110-DP, CU_S110-CAN, CU_S110-PN, SERVO_S110-DP, SERVO_S110-CAN, SERVO_S110-PN

Can be changed: - **Calculated:** - **Access level:** 3
Data type: Unsigned16 **Dyn. index:** - **Func. diagram:** 1530, 8070
P-Group: Messages **Unit group:** - **Unit selection:** -
Not for motor type: - **Scaling:** - **Expert list:** 1

Min	Max	Factory setting
-	-	-

Description: Trigger signal for the selected faults and alarms

Bit field:

Bit	Signal name	1 signal	0 signal	FP
00	Trigger signal p2128[0]	ON	OFF	-
01	Trigger signal p2128[1]	ON	OFF	-
02	Trigger signal p2128[2]	ON	OFF	-
03	Trigger signal p2128[3]	ON	OFF	-
04	Trigger signal p2128[4]	ON	OFF	-
05	Trigger signal p2128[5]	ON	OFF	-
06	Trigger signal p2128[6]	ON	OFF	-
07	Trigger signal p2128[7]	ON	OFF	-
08	Trigger signal p2128[8]	ON	OFF	-
09	Trigger signal p2128[9]	ON	OFF	-
10	Trigger signal p2128[10]	ON	OFF	-
11	Trigger signal p2128[11]	ON	OFF	-
12	Trigger signal p2128[12]	ON	OFF	-
13	Trigger signal p2128[13]	ON	OFF	-
14	Trigger signal p2128[14]	ON	OFF	-
15	Trigger signal p2128[15]	ON	OFF	-

Dependency: If one of the faults or alarms selected in p2128[n] occurs, then the particular bit of this binector output is set.
Refer to: p2128

Note: CO: r2129 = 0 --> None of the selected messages has occurred.
CO: r2129 > 0 --> At least one of the selected messages has occurred.

r2130[0...63] Fault time received in days / t_fault recv days

CU_S110-DP, CU_S110-CAN, CU_S110-PN, SERVO_S110-DP, SERVO_S110-CAN, SERVO_S110-PN

Can be changed: - **Calculated:** - **Access level:** 3
Data type: Unsigned16 **Dyn. index:** - **Func. diagram:** 8060
P-Group: Messages **Unit group:** - **Unit selection:** -
Not for motor type: - **Scaling:** - **Expert list:** 1

Min	Max	Factory setting
-	-	-

Description: Displays the system runtime in days when the fault occurred.
Dependency: Refer to: r0945, r0947, r0948, r0949, r2109, r2114, r2133, r2136, r3115, r3120, r3122
Notice: The time comprises r2130 (days) and r0948 (milliseconds).
Note: The buffer parameters are cyclically updated in the background (refer to status signal in r2139).

r2131 CO: Actual fault code / Actual fault code

CU_S110-DP, CU_S110-CAN, CU_S110-PN, SERVO_S110-DP, SERVO_S110-CAN, SERVO_S110-PN

Can be changed: - **Calculated:** - **Access level:** 3
Data type: Unsigned16 **Dyn. index:** - **Func. diagram:** 8060
P-Group: Messages **Unit group:** - **Unit selection:** -
Not for motor type: - **Scaling:** - **Expert list:** 1

Min	Max	Factory setting
-	-	-

Description: Displays the code of the oldest active fault.
Dependency: Refer to: r3131, r3132
Note: 0: No fault present.

r2132 CO: Actual alarm code / Actual alarm code

CU_S110-DP, CU_S110-CAN, CU_S110-PN, SERVO_S110-DP, SERVO_S110-CAN, SERVO_S110-PN

Can be changed: - **Calculated:** - **Access level:** 3
Data type: Unsigned16 **Dyn. index:** - **Func. diagram:** 8065
P-Group: Messages **Unit group:** - **Unit selection:** -
Not for motor type: - **Scaling:** - **Expert list:** 1

Min	Max	Factory setting
-	-	-

Description: Displays the code of the last alarm that occurred.
Note: 0: No alarm present.

r2133[0...63] Fault value for float values / Fault val float

CU_S110-DP, CU_S110-CAN, CU_S110-PN, SERVO_S110-DP, SERVO_S110-CAN, SERVO_S110-PN

Can be changed: - **Calculated:** - **Access level:** 3
Data type: FloatingPoint32 **Dyn. index:** - **Func. diagram:** 8060
P-Group: Messages **Unit group:** - **Unit selection:** -
Not for motor type: - **Scaling:** - **Expert list:** 1

Min	Max	Factory setting
-	-	-

Description: Displays additional information about the fault that occurred for float values.
Dependency: Refer to: r0945, r0947, r0948, r0949, r2109, r2130, r2136, r3115
Note: The buffer parameters are cyclically updated in the background (refer to status signal in r2139).

r2134[0...63] Alarm value for float values / Alarm value float

CU_S110-DP, CU_S110-CAN, CU_S110-PN, SERVO_S110-DP, SERVO_S110-CAN, SERVO_S110-PN

Can be changed: - **Calculated:** - **Access level:** 3
Data type: FloatingPoint32 **Dyn. index:** - **Func. diagram:** 8065
P-Group: Messages **Unit group:** - **Unit selection:** -
Not for motor type: - **Scaling:** - **Expert list:** 1

Min	Max	Factory setting
-	-	-

Description: Displays additional information about the active alarm for float values.
Dependency: Refer to: r2110, r2122, r2123, r2124, r2125, r2145, r2146, r3121, r3123
Note: The buffer parameters are cyclically updated in the background (refer to status signal in r2139).

r2135.0...15 CO/BO: Status word faults/alarms 2 / ZSW fault/alarm 2

CU_S110-DP, CU_S110-CAN, CU_S110-PN, SERVO_S110-DP, SERVO_S110-CAN, SERVO_S110-PN

Can be changed: - **Calculated:** - **Access level:** 2
Data type: Unsigned16 **Dyn. index:** - **Func. diagram:** 1530, 2548
P-Group: Displays, signals **Unit group:** - **Unit selection:** -
Not for motor type: - **Scaling:** - **Expert list:** 1

Min	Max	Factory setting
-	-	-

Description: Displays the second status word of faults and alarms.

Bit field:

Bit	Signal name	1 signal	0 signal	FP
00	Fault encoder 1	Yes	No	-
01	Fault encoder 2	Yes	No	-
12	Fault motor overtemperature	Yes	No	-
13	Fault power unit thermal overload	Yes	No	-
14	Alarm motor overtemperature	Yes	No	-
15	Alarm power unit thermal overload	Yes	No	-

r2136[0...63] Fault time removed in days / t_flt resolv days

CU_S110-DP, CU_S110-CAN, CU_S110-PN, SERVO_S110-DP, SERVO_S110-CAN, SERVO_S110-PN

Can be changed: - **Calculated:** - **Access level:** 3
Data type: Unsigned16 **Dyn. index:** - **Func. diagram:** 8060
P-Group: Messages **Unit group:** - **Unit selection:** -
Not for motor type: - **Scaling:** - **Expert list:** 1

Min	Max	Factory setting
-	-	-

Description: Displays the system runtime in days when the fault was removed.

Dependency: Refer to: r0945, r0947, r0948, r0949, r2109, r2114, r2130, r2133, r3115, r3120, r3122

Notice: The time comprises r2136 (days) and r2109 (milliseconds).

Note: The buffer parameters are cyclically updated in the background (refer to status signal in r2139).

r2138.7...15 CO/BO: Control word faults/alarms / STW fault/alarm

CU_S110-DP, CU_S110-CAN, CU_S110-PN, SERVO_S110-DP, SERVO_S110-CAN, SERVO_S110-PN

Can be changed: - **Calculated:** - **Access level:** 2
Data type: Unsigned16 **Dyn. index:** - **Func. diagram:** 1530, 2546
P-Group: Displays, signals **Unit group:** - **Unit selection:** -
Not for motor type: - **Scaling:** - **Expert list:** 1

Min	Max	Factory setting
-	-	-

Description: Displays the control word of the faults and alarms.

Bit field:

Bit	Signal name	1 signal	0 signal	FP
07	Acknowledge fault	Yes	No	-
10	External alarm 1 (A07850) effective	Yes	No	-
11	External alarm 2 (A07851) effective	Yes	No	-
12	External alarm 3 (A07852) effective	Yes	No	-
13	External fault 1 (F07860) effective	Yes	No	-
14	External fault 2 (F07861) effective	Yes	No	-
15	External fault 3 (F07862) effective	Yes	No	-

Dependency: Refer to: p2103, p2104, p2105, p2106, p2107, p2108, p2112, p2116, p2117

r2139.0...12 CO/BO: Status word faults/alarms 1 / ZSW fault/alarm 1

CU_S110-DP, CU_S110-CAN, CU_S110-PN, SERVO_S110-DP, SERVO_S110-CAN, SERVO_S110-PN

Can be changed: - **Calculated:** - **Access level:** 2
Data type: Unsigned16 **Dyn. index:** - **Func. diagram:** 1530, 2548
P-Group: Displays, signals **Unit group:** - **Unit selection:** -
Not for motor type: - **Scaling:** - **Expert list:** 1

Min	Max	Factory setting
-	-	-

Description: Displays the first status word of faults and alarms.

Bit field:

Bit	Signal name	1 signal	0 signal	FP
00	Being acknowledged	Yes	No	-
01	Acknowledgment required	Yes	No	-
03	Fault present	Yes	No	-
05	Safety message present	Yes	No	-
06	Internal message 1 present	Yes	No	-
07	Alarm present	Yes	No	-
08	Internal message 2 present	Yes	No	-
11	Alarm class bit 0	High	Low	-
12	Alarm class bit 1	High	Low	-

Note: Re bit 03, 05, 07:

These bits are set if at least one fault/alarm occurs. Data is entered into the fault/alarm buffer with delay. This is the reason that the fault/alarm buffer should only be read if, after "fault present"/"alarm present" has occurred, a change in the buffer was also detected (r0944, r9744, r2121).

Re bit 06, 08:

These status bits are used for internal diagnostic purposes only.

Re bit 11, 12:

These status bits are used for the classification of internal alarm classes and are intended for diagnostic purposes only on certain automation systems with integrated SINAMICS functionality.

p2140[0...n] Hysteresis speed 2 / n_hysteresis 2

SERVO_S110-DP, SERVO_S110-CAN, SERVO_S110-PN

Can be changed: U, T	**Calculated:** CALC_MOD_LIM_REF	**Access level:** 3
Data type: FloatingPoint32	**Dyn. index:** DDS, p0180	**Func. diagram:** 8010
P-Group: Messages	**Unit group:** 3_1	**Unit selection:** p0505
Not for motor type: -	**Scaling:** -	**Expert list:** 1
Min	**Max**	**Factory setting**
0.00 [rpm]	300.00 [rpm]	90.00 [rpm]

Description: Sets the hysteresis speed (bandwidth) for the following signals:
"|n_act| < = speed threshold value 2" (BO: r2197.1)
"|n_act| > speed threshold value 2" (BO: r2197.2)

Dependency: Refer to: p2155, r2197

p2141[0...n] Speed threshold 1 / n_thresh val 1

SERVO_S110-DP, SERVO_S110-CAN, SERVO_S110-PN

Can be changed: U, T	**Calculated:** CALC_MOD_LIM_REF	**Access level:** 3
Data type: FloatingPoint32	**Dyn. index:** DDS, p0180	**Func. diagram:** 8010
P-Group: Messages	**Unit group:** 3_1	**Unit selection:** p0505
Not for motor type: -	**Scaling:** -	**Expert list:** 1
Min	**Max**	**Factory setting**
0.00 [rpm]	210000.00 [rpm]	5.00 [rpm]

Description: Sets the speed threshold value for the signal "f or n comparison value reached or exceeded" (BO: r2199.1).

Dependency: Refer to: p2142, r2199

p2142[0...n] Hysteresis speed 1 / n_hysteresis 1

SERVO_S110-DP, SERVO_S110-CAN, SERVO_S110-PN

Can be changed: U, T	**Calculated:** CALC_MOD_LIM_REF	**Access level:** 3
Data type: FloatingPoint32	**Dyn. index:** DDS, p0180	**Func. diagram:** 8010
P-Group: Messages	**Unit group:** 3_1	**Unit selection:** p0505
Not for motor type: -	**Scaling:** -	**Expert list:** 1
Min	**Max**	**Factory setting**
0.00 [rpm]	300.00 [rpm]	2.00 [rpm]

Description: Sets the hysteresis speed (bandwidth) for the signal "f or n / v comparison value reached or exceeded" (BO: r2199.1).

Dependency: Refer to: p2141, r2199

p2144[0...n] BI: Motor stall monitoring enable (negated) / Mot stall enab neg

SERVO_S110-DP, SERVO_S110-CAN, SERVO_S110-PN

Can be changed: U, T	**Calculated:** -	**Access level:** 3
Data type: Unsigned32 / Binary	**Dyn. index:** CDS, p0170	**Func. diagram:** 8012
P-Group: -	**Unit group:** -	**Unit selection:** -
Not for motor type: -	**Scaling:** -	**Expert list:** 1
Min	**Max**	**Factory setting**
-	-	0

Description: Sets the signal source for the negated enable (0 = enable) of the motor stall monitoring.

Dependency: Refer to: p2163, p2164, p2166, r2197, r2198
Refer to: F07900

Note: If the enable signal is connected to r2197.7 then the stall signal is suppressed if there is no speed setpoint - actual value deviation.

r2145[0...63] Alarm time received in days / t_alarm recv days

CU_S110-DP, CU_S110-CAN, CU_S110-PN, SERVO_S110-DP, SERVO_S110-CAN, SERVO_S110-PN

Can be changed: -	**Calculated:** -	**Access level:** 3
Data type: Unsigned16	**Dyn. index:** -	**Func. diagram:** 8065
P-Group: Messages	**Unit group:** -	**Unit selection:** -
Not for motor type: -	**Scaling:** -	**Expert list:** 1
Min	**Max**	**Factory setting**
-	-	-

Description: Displays the system runtime in days when the alarm occurred.
Dependency: Refer to: r2110, r2114, r2122, r2123, r2124, r2125, r2134, r2146, r3121, r3123
Notice: The time comprises r2145 (days) and r2123 (milliseconds).
Note: The buffer parameters are cyclically updated in the background (refer to status signal in r2139).

r2146[0...63] Alarm time removed in days / t_alarm res days

CU_S110-DP, CU_S110-CAN, CU_S110-PN, SERVO_S110-DP, SERVO_S110-CAN, SERVO_S110-PN

Can be changed: -	**Calculated:** -	**Access level:** 3
Data type: Unsigned16	**Dyn. index:** -	**Func. diagram:** 8065
P-Group: Messages	**Unit group:** -	**Unit selection:** -
Not for motor type: -	**Scaling:** -	**Expert list:** 1
Min	**Max**	**Factory setting**
-	-	-

Description: Displays the system runtime in days when the alarm was cleared.
Dependency: Refer to: r2110, r2114, r2122, r2123, r2124, r2125, r2134, r2145, r3121, r3123
Notice: The time comprises r2146 (days) and r2125 (milliseconds).
Note: The buffer parameters are cyclically updated in the background (refer to status signal in r2139).

p2147 Delete fault buffer of all drive objects / Del fault buffer

CU_S110-DP, CU_S110-CAN, CU_S110-PN

Can be changed: U, T	**Calculated:** -	**Access level:** 4
Data type: Integer16	**Dyn. index:** -	**Func. diagram:** 8060
P-Group: Displays, signals	**Unit group:** -	**Unit selection:** -
Not for motor type: -	**Scaling:** -	**Expert list:** 1
Min	**Max**	**Factory setting**
0	1	0

Description: Setting to delete the fault buffer of all existing drive objects.
Value:
0: Inactive
1: Start to delete the fault buffer of all drive objects
Dependency: Refer to: r0945, r0947, r0948, r0949, r2109, r2130, r2133, r2136
Note: p2147 is automatically set to 0 after execution.

p2148[0...n] BI: RFG active / RFG active

SERVO_S110-DP, SERVO_S110-CAN, SERVO_S110-PN

Can be changed: U, T	**Calculated:** CALC_MOD_LIM_REF	**Access level:** 3
Data type: Unsigned32 / Binary	**Dyn. index:** CDS, p0170	**Func. diagram:** 8011
P-Group: Messages	**Unit group:** -	**Unit selection:** -
Not for motor type: -	**Scaling:** -	**Expert list:** 1
Min	**Max**	**Factory setting**
-	-	0

Description: Sets the signal source for the signal "ramp-function generator active" for the following signals/messages:
"Speed setpoint - actual value deviation within tolerance t_on" (BO: r2199.4)
"Ramp-up/ramp-down completed" (BO: r2199.5)
Notice: The parameter may be protected as a result of p0922 or p2079 and cannot be changed.
Note: The binector input is automatically pre-assigned to r1199.2.
The following applies for SERVO:
The pre-assignment is only made when the function module "setpoint channel" is activated (r0108.8 = 1).

p2149[0...n] Monitoring configuration / Monit config

SERVO_S110-DP, SERVO_S110-CAN, SERVO_S110-PN

Can be changed: U, T	**Calculated:** -	**Access level:** 3
Data type: Unsigned16	**Dyn. index:** DDS, p0180	**Func. diagram:** 8010, 8013
P-Group: Messages	**Unit group:** -	**Unit selection:** -
Not for motor type: -	**Scaling:** -	**Expert list:** 1
Min	**Max**	**Factory setting**
-	-	0000 0000 0000 0000 bin

Description: Sets the configuration for messages and monitoring functions.

Bit field:

Bit	Signal name	1 signal	0 signal	FP
00	Enable alarm A07903	Yes	No	8010
01	Load monitoring only in the 1st quadrant	Yes	No	8013
03	n_act > p2155 own hysteresis	Yes	No	8010
15	Automatic parameterization carried out (p0340 = 1, p3900 > 0)	Yes	No	-

Dependency: Refer to: r2197
Refer to: A07903

Note: Re bit 00:
Alarm A07903 is output when the bit is set with r2197.7 = 0 (n_set <> n_act).
Re bit 01:
When the bit is set, load monitoring is only carried out in the 1st quadrant as a result of the positive characteristic parameters (p2182 ... p2190).
Re bit 03:
When the bit is set, r2197 bit 1 and bit 2 are determined via separate hystereses.
Re bit 15:
The bit indicates whether the automatic parameterization (p0340 = 1, p3900 > 0) for the parameters of the extended monitoring functions was carried out. If the bit is not set (e.g. when the configuration is activated (p0108.15)), the parameterization is automatically carried out during booting even if r3925.0 is already 1.

p2150[0...n] Hysteresis speed 3 / n_hysteresis 3

SERVO_S110-DP, SERVO_S110-CAN, SERVO_S110-PN

Can be changed: U, T	**Calculated:** CALC_MOD_LIM_REF	**Access level:** 3
Data type: FloatingPoint32	**Dyn. index:** DDS, p0180	**Func. diagram:** 8010
P-Group: Messages	**Unit group:** 3_1	**Unit selection:** p0505
Not for motor type: -	**Scaling:** -	**Expert list:** 1
Min	**Max**	**Factory setting**
0.00 [rpm]	300.00 [rpm]	2.00 [rpm]

Description: Sets the hysteresis speed (bandwidth) for the following signals:
"|n_act| < speed threshold value 3" (BO: r2199.0)
"n_set >= 0" (BO: r2198.5)
"n_act >= 0" (BO: r2197.3)

Dependency: Refer to: p2161, r2197, r2199

p2151[0...n] CI: Speed setpoint for messages/signals / n_set for msg

SERVO_S110-DP, SERVO_S110-CAN, SERVO_S110-PN

Can be changed: T	**Calculated:** -	**Access level:** 3
Data type: Unsigned32 / FloatingPoint32	**Dyn. index:** CDS, p0170	**Func. diagram:** 8010
P-Group: Messages	**Unit group:** -	**Unit selection:** -
Not for motor type: -	**Scaling:** p2000	**Expert list:** 1
Min	**Max**	**Factory setting**
-	-	1438[0]

Description: Sets the signal source for the speed setpoint for the following messages:
"Speed setpoint - actual value deviation within tolerance t_off" (BO: r2197.7)
"Ramp-up/ramp-down completed" (BO: r2199.5)
"|n_set| < p2161" (BO: r2198.4)
"n_set > 0" (BO: r2198.5)

Dependency: Refer to: r2197, r2198, r2199

p2153[0...n] Speed actual value filter time constant / n_act_filt T

SERVO_S110-DP, SERVO_S110-CAN, SERVO_S110-PN

Can be changed: U, T	**Calculated:** -	**Access level:** 3
Data type: FloatingPoint32	**Dyn. index:** DDS, p0180	**Func. diagram:** 8010
P-Group: Messages	**Unit group:** -	**Unit selection:** -
Not for motor type: -	**Scaling:** -	**Expert list:** 1
Min	**Max**	**Factory setting**
0 [ms]	1000000 [ms]	0 [ms]

Description: Sets the time constant of the PT1 element to smooth the speed / velocity actual value.
The smoothed actual speed/velocity is compared with the threshold values and is only used for messages and signals.

Dependency: Refer to: r2169

p2154[0...n] CI: Speed setpoint 2 / n_set 2

SERVO_S110-DP, SERVO_S110-CAN, SERVO_S110-PN

Can be changed: T	**Calculated:** -	**Access level:** 3
Data type: Unsigned32 / FloatingPoint32	**Dyn. index:** CDS, p0170	**Func. diagram:** 8010
P-Group: Messages	**Unit group:** -	**Unit selection:** -
Not for motor type: -	**Scaling:** p2000	**Expert list:** 1
Min	**Max**	**Factory setting**
-	-	0

Description: Sets the signal source for speed setpoint 2.
The sum of p2151 and p2154 is used for the following messages/signals:
"Speed setpoint - actual value deviation within tolerance t_off" (r2197.7)
"Speed setpoint - actual value deviation within tolerance t_on" (r2199.4)
"Ramp-up/ramp-down completed" (r2199.5)

Dependency: Refer to: p2151, r2197, r2199

p2155[0...n] Speed threshold 2 / n_thresh val 2

SERVO_S110-DP, SERVO_S110-CAN, SERVO_S110-PN

Can be changed: U, T	**Calculated:** CALC_MOD_LIM_REF	**Access level:** 3
Data type: FloatingPoint32	**Dyn. index:** DDS, p0180	**Func. diagram:** 8010
P-Group: Messages	**Unit group:** 3_1	**Unit selection:** p0505
Not for motor type: -	**Scaling:** -	**Expert list:** 1
Min	**Max**	**Factory setting**
0.00 [rpm]	210000.00 [rpm]	900.00 [rpm]

Description: Sets the speed threshold value for the following messages:
"|n_act| < = speed threshold value 2" (BO: r2197.1)
"|n_act| > speed threshold value 2" (BO: r2197.2)

Dependency: Refer to: p2140, r2197

p2156[0...n] On delay comparison value reached / t_on cmpr val rchd

SERVO_S110-DP, SERVO_S110-CAN, SERVO_S110-PN

Can be changed: U, T	**Calculated:** -	**Access level:** 2
Data type: FloatingPoint32	**Dyn. index:** DDS, p0180	**Func. diagram:** 8010
P-Group: Messages	**Unit group:** -	**Unit selection:** -
Not for motor type: -	**Scaling:** -	**Expert list:** 1
Min	**Max**	**Factory setting**
0.0 [ms]	10000.0 [ms]	0.0 [ms]

Description: Sets the switch-in delay time for the signal "comparison value reached" (BO: r2199.1).

Dependency: Refer to: p2141, p2142, r2199

p2161[0...n] Speed threshold 3 / n_thresh val 3

SERVO_S110-DP, SERVO_S110-CAN, SERVO_S110-PN

Can be changed: U, T	**Calculated:** CALC_MOD_LIM_REF	**Access level:** 3
Data type: FloatingPoint32	**Dyn. index:** DDS, p0180	**Func. diagram:** 8010
P-Group: Messages	**Unit group:** 3_1	**Unit selection:** p0505
Not for motor type: -	**Scaling:** -	**Expert list:** 1
Min	**Max**	**Factory setting**
0.00 [rpm]	210000.00 [rpm]	5.00 [rpm]

Description: Sets the speed threshold value for the signal "|n_act| < speed threshold value 3" (BO: r2199.0).

Dependency: Refer to: p2150, r2199

p2162[0...n] Hysteresis speed n_act > n_max / Hyst n_act>n_max

SERVO_S110-DP, SERVO_S110-CAN, SERVO_S110-PN

Can be changed: U, T	**Calculated:** CALC_MOD_LIM_REF	**Access level:** 2
Data type: FloatingPoint32	**Dyn. index:** DDS, p0180	**Func. diagram:** 8010
P-Group: Messages	**Unit group:** 3_1	**Unit selection:** p0505
Not for motor type: -	**Scaling:** -	**Expert list:** 1
Min	**Max**	**Factory setting**
0.00 [rpm]	60000.00 [rpm]	0.00 [rpm]

Description: Sets the hysteresis speed (bandwidth) for the signal "n_act > n_max" (BO: r2197.6).

Dependency: Refer to: r1084, r1087, r2197

Notice: For p0322 = 0, the following applies: p2162 <= 0.1 * p0311

For p0322 > 0, the following applies: p2162 <= 1.02 * p0322 - p1082

If one of the conditions is violated, p2162 is appropriately and automatically reduced when exiting the commissioning mode.

Note: For a negative speed limit (r1087) the hysteresis is effective below the limit value and for a positive speed limit (r1084) above the limit value.

If significant overshoot occurs in the maximum speed range (e.g. due to load shedding), you are advised to increase the dynamic response of the speed controller (if possible). If this is insufficient, the hysteresis p2162 can only be increased by more than 10% of the rated speed when the maximum speed (p0322) of the motor is sufficiently greater than the speed limit p1082.

p2163[0...n] Speed threshold 4 / n_thresh val 4

SERVO_S110-DP, SERVO_S110-CAN, SERVO_S110-PN

Can be changed: U, T	**Calculated:** CALC_MOD_LIM_REF	**Access level:** 2
Data type: FloatingPoint32	**Dyn. index:** DDS, p0180	**Func. diagram:** 8010
P-Group: Messages	**Unit group:** 3_1	**Unit selection:** p0505
Not for motor type: -	**Scaling:** -	**Expert list:** 1
Min	**Max**	**Factory setting**
0.00 [rpm]	210000.00 [rpm]	90.00 [rpm]

Description: Sets the speed threshold value for the "speed setpoint - actual value deviation in tolerance t_off" signal/message (BO: r2197.7).

Dependency: Refer to: p2164, p2166, r2197

p2164[0...n] Hysteresis speed 4 / n_hysteresis 4

SERVO_S110-DP, SERVO_S110-CAN, SERVO_S110-PN

Can be changed: U, T	**Calculated:** CALC_MOD_LIM_REF	**Access level:** 2
Data type: FloatingPoint32	**Dyn. index:** DDS, p0180	**Func. diagram:** 8010
P-Group: Messages	**Unit group:** 3_1	**Unit selection:** p0505
Not for motor type: -	**Scaling:** -	**Expert list:** 1
Min	**Max**	**Factory setting**
0.00 [rpm]	200.00 [rpm]	2.00 [rpm]

Description: Sets the hysteresis speed (bandwidth) for the "speed setpoint - actual value deviation in tolerance t_off" signal/message (BO: r2197.7).

Dependency: Refer to: p2163, p2166, r2197

p2166[0...n] Off delay n_act = n_set / t_del_off n_i=n_so

SERVO_S110-DP, SERVO_S110-CAN, SERVO_S110-PN

Can be changed: U, T	**Calculated:** -	**Access level:** 2
Data type: FloatingPoint32	**Dyn. index:** DDS, p0180	**Func. diagram:** 8010
P-Group: Messages	**Unit group:** -	**Unit selection:** -
Not for motor type: -	**Scaling:** -	**Expert list:** 1
Min	**Max**	**Factory setting**
0.0 [ms]	10000.0 [ms]	200.0 [ms]

Description: Sets the switch-off delay time for the "speed setpoint - actual value deviation in tolerance t_off" signal/message (BO: r2197.7).

Dependency: Refer to: p2163, p2164, r2197

p2167[0...n] Switch-on delay n_act = n_set / t_on n_act=n_set

SERVO_S110-DP, SERVO_S110-CAN, SERVO_S110-PN

Can be changed: U, T	**Calculated:** -	**Access level:** 2
Data type: FloatingPoint32	**Dyn. index:** DDS, p0180	**Func. diagram:** 8010
P-Group: Messages	**Unit group:** -	**Unit selection:** -
Not for motor type: -	**Scaling:** -	**Expert list:** 1
Min	**Max**	**Factory setting**
0.0 [ms]	10000.0 [ms]	200.0 [ms]

Description: Sets the switch-on delay for the "speed setpoint - actual value deviation in tolerance t_on" signal/message (BO: r2199.4).

r2169 CO: Actual speed smoothed signals / n_act smth message

SERVO_S110-DP, SERVO_S110-CAN, SERVO_S110-PN

Can be changed: -	**Calculated:** -	**Access level:** 2
Data type: FloatingPoint32	**Dyn. index:** -	**Func. diagram:** 1750, 8010, 8012, 8013
P-Group: Messages	**Unit group:** 3_1	**Unit selection:** p0505
Not for motor type: -	**Scaling:** p2000	**Expert list:** 1
Min	**Max**	**Factory setting**
- [rpm]	- [rpm]	- [rpm]

Description: Displays the smoothed actual speed for messages/signals.

Dependency: Refer to: p2153

p2174[0...n] Torque threshold value 1 / M_thresh val 1

SERVO_S110-DP, SERVO_S110-CAN, SERVO_S110-PN

Can be changed: U, T	**Calculated:** -	**Access level:** 2
Data type: FloatingPoint32	**Dyn. index:** DDS, p0180	**Func. diagram:** 8012
P-Group: Messages	**Unit group:** 7_1	**Unit selection:** p0505
Not for motor type: -	**Scaling:** -	**Expert list:** 1
Min	**Max**	**Factory setting**
0.00 [Nm]	20000000.00 [Nm]	5.13 [Nm]

Description: Sets the torque threshold value for the signal "Torque setpoint < torque threshold value 1" (BO: r2198.10).

Dependency: Refer to: p2195, r2198

p2175[0...n] Motor blocked speed threshold / Mot lock n_thresh

SERVO_S110-DP, SERVO_S110-CAN, SERVO_S110-PN

Can be changed: U, T	**Calculated:** CALC_MOD_LIM_REF	**Access level:** 3
Data type: FloatingPoint32	**Dyn. index:** DDS, p0180	**Func. diagram:** 8012
P-Group: Messages	**Unit group:** 3_1	**Unit selection:** p0505
Not for motor type: -	**Scaling:** -	**Expert list:** 1
Min	**Max**	**Factory setting**
0.00 [rpm]	210000.00 [rpm]	120.00 [rpm]

Description: Sets the speed threshold for the message "Motor blocked" (BO: r2198.6).

Dependency: Refer to: p0500, p2177, r2198

p2177[0...n] Motor blocked delay time / Mot lock t_del

SERVO_S110-DP, SERVO_S110-CAN, SERVO_S110-PN

Can be changed: U, T	**Calculated:** CALC_MOD_LIM_REF	**Access level:** 2
Data type: FloatingPoint32	**Dyn. index:** DDS, p0180	**Func. diagram:** 8012
P-Group: Messages	**Unit group:** -	**Unit selection:** -
Not for motor type: -	**Scaling:** -	**Expert list:** 1
Min	**Max**	**Factory setting**
0.000 [s]	65.000 [s]	1.000 [s]

Description: Sets the delay time for the message "Motor blocked" (BO: r2198.6).

Dependency: Refer to: p0500, p2175, r2198

p2181[0...n] Load monitoring response / Load monit resp

SERVO_S110-DP (Ext msg), SERVO_S110-CAN (Ext msg), SERVO_S110-PN (Ext msg)

Can be changed: U, T	**Calculated:** -	**Access level:** 3
Data type: Integer16	**Dyn. index:** DDS, p0180	**Func. diagram:** 8013
P-Group: Messages	**Unit group:** -	**Unit selection:** -
Not for motor type: -	**Scaling:** -	**Expert list:** 1
Min	**Max**	**Factory setting**
0	6	0

Description: Sets the response when evaluating the load monitoring.

Value:
0: Load monitoring disabled
1: A07920 for torque/speed too low
2: A07921 for torque/speed too high
3: A07922 for torque/speed out of tolerance
4: F07923 for torque/speed too low
5: F07924 for torque/speed too high
6: F07925 for torque/speed out of tolerance

Dependency: Refer to: p2182, p2183, p2184, p2185, p2186, p2187, p2188, p2189, p2190, p2192, r2198
Refer to: A07920, A07921, A07922, F07923, F07924, F07925

Note: The response to the faults F07923 ... F07925 can be set. F07926 is evaluated only if p2181 is not zero.

p2182[0...n] Load monitoring speed threshold value 1 / n_thresh 1

SERVO_S110-DP (Ext msg), SERVO_S110-CAN (Ext msg), SERVO_S110-PN (Ext msg)

Can be changed: U, T	**Calculated:** -	**Access level:** 3
Data type: FloatingPoint32	**Dyn. index:** DDS, p0180	**Func. diagram:** 8013
P-Group: Messages	**Unit group:** 3_1	**Unit selection:** p0505
Not for motor type: -	**Scaling:** -	**Expert list:** 1
Min	**Max**	**Factory setting**
0.00 [rpm]	210000.00 [rpm]	150.00 [rpm]

Description: Sets the speed/torque envelope curve for load monitoring.
The envelope curve (upper and lower envelope curve) is defined as follows based on 3 speed thresholds:
p2182 (n_threshold 1) --> p2185 (M_threshold 1, upper), p2186 (M_threshold 1, lower)
p2183 (n_threshold 2) --> p2187 (M_threshold 2, upper), p2188 (M_threshold 2, lower)
p2184 (n_threshold 3) --> p2189 (M_threshold 3, upper), p2190 (M_threshold 3, lower)

Dependency: The following applies: p2182 < p2183 < p2184
Refer to: p2183, p2184, p2185, p2186
Refer to: A07926

p2183[0...n] Load monitoring speed threshold value 2 / n_thresh 2

SERVO_S110-DP (Ext msg), SERVO_S110-CAN (Ext msg), SERVO_S110-PN (Ext msg)

Can be changed: U, T	**Calculated:** -	**Access level:** 3
Data type: FloatingPoint32	**Dyn. index:** DDS, p0180	**Func. diagram:** 8013
P-Group: Messages	**Unit group:** 3_1	**Unit selection:** p0505
Not for motor type: -	**Scaling:** -	**Expert list:** 1
Min	**Max**	**Factory setting**
0.00 [rpm]	210000.00 [rpm]	900.00 [rpm]

Description: Sets the speed/torque envelope curve for load monitoring.
The envelope curve (upper and lower envelope curve) is defined as follows based on 3 speed thresholds:
p2182 (n_threshold 1) --> p2185 (M_threshold 1, upper), p2186 (M_threshold 1, lower)
p2183 (n_threshold 2) --> p2187 (M_threshold 2, upper), p2188 (M_threshold 2, lower)
p2184 (n_threshold 3) --> p2189 (M_threshold 3, upper), p2190 (M_threshold 3, lower)

Dependency: The following applies: p2182 < p2183 < p2184
Refer to: p2182, p2184, p2187, p2188
Refer to: A07926

p2184[0...n] Load monitoring speed threshold value 3 / n_thresh 3

SERVO_S110-DP (Ext msg), SERVO_S110-CAN (Ext msg), SERVO_S110-PN (Ext msg)

Can be changed: U, T	**Calculated:** -	**Access level:** 3
Data type: FloatingPoint32	**Dyn. index:** DDS, p0180	**Func. diagram:** 8013
P-Group: Messages	**Unit group:** 3_1	**Unit selection:** p0505
Not for motor type: -	**Scaling:** -	**Expert list:** 1
Min	**Max**	**Factory setting**
0.00 [rpm]	210000.00 [rpm]	1500.00 [rpm]

Description: Sets the speed/torque envelope curve for load monitoring.
The envelope curve (upper and lower envelope curve) is defined as follows based on 3 speed thresholds:
p2182 (n_threshold 1) --> p2185 (M_threshold 1, upper), p2186 (M_threshold 1, lower)
p2183 (n_threshold 2) --> p2187 (M_threshold 2, upper), p2188 (M_threshold 2, lower)
p2184 (n_threshold 3) --> p2189 (M_threshold 3, upper), p2190 (M_threshold 3, lower)

Dependency: The following applies: p2182 < p2183 < p2184
Refer to: p2182, p2183, p2189, p2190
Refer to: A07926

p2185[0...n] Load monitoring torque threshold 1 upper / M_thresh 1 upper

SERVO_S110-DP (Ext msg), SERVO_S110-CAN (Ext msg), SERVO_S110-PN (Ext msg)

Can be changed: U, T	**Calculated:** -	**Access level:** 3
Data type: FloatingPoint32	**Dyn. index:** DDS, p0180	**Func. diagram:** 8013
P-Group: Messages	**Unit group:** 7_1	**Unit selection:** p0505
Not for motor type: -	**Scaling:** -	**Expert list:** 1
Min	**Max**	**Factory setting**
0.00 [Nm]	20000000.00 [Nm]	10000000.00 [Nm]

Description: Sets the speed/torque / velocity/force envelope curve for the load monitoring.

Dependency: The following applies: p2185 > p2186
Refer to: p2182, p2186
Refer to: A07926

Note: The upper envelope curve is defined by p2185, p2187 and p2189.

p2186[0...n] Load monitoring torque threshold 1 lower / M_thresh 1 lower

SERVO_S110-DP (Ext msg), SERVO_S110-CAN (Ext msg), SERVO_S110-PN (Ext msg)

Can be changed: U, T	**Calculated:** -	**Access level:** 3
Data type: FloatingPoint32	**Dyn. index:** DDS, p0180	**Func. diagram:** 8013
P-Group: Messages	**Unit group:** 7_1	**Unit selection:** p0505
Not for motor type: -	**Scaling:** -	**Expert list:** 1
Min	**Max**	**Factory setting**
0.00 [Nm]	20000000.00 [Nm]	0.00 [Nm]

Description: Sets the speed/torque / velocity/force envelope curve for the load monitoring.

Dependency: The following applies: p2186 < p2185
Refer to: p2182, p2185
Refer to: A07926

Note: The lower envelope curve is defined by p2186, p2188 and p2190.

p2187[0...n] Load monitoring torque threshold 2 upper / M_thresh 2 upper

SERVO_S110-DP (Ext msg), SERVO_S110-CAN (Ext msg), SERVO_S110-PN (Ext msg)

Can be changed: U, T	**Calculated:** -	**Access level:** 3
Data type: FloatingPoint32	**Dyn. index:** DDS, p0180	**Func. diagram:** 8013
P-Group: Messages	**Unit group:** 7_1	**Unit selection:** p0505
Not for motor type: -	**Scaling:** -	**Expert list:** 1
Min	**Max**	**Factory setting**
0.00 [Nm]	20000000.00 [Nm]	10000000.00 [Nm]

Description: Sets the speed/torque / velocity/force envelope curve for the load monitoring.

Dependency: The following applies: p2187 > p2188
Refer to: p2183, p2188
Refer to: A07926

Note: The upper envelope curve is defined by p2185, p2187 and p2189.

p2188[0...n] Load monitoring torque threshold 2 lower / M_thresh 2 lower

SERVO_S110-DP (Ext msg), SERVO_S110-CAN (Ext msg), SERVO_S110-PN (Ext msg)

Can be changed: U, T	**Calculated:** -	**Access level:** 3
Data type: FloatingPoint32	**Dyn. index:** DDS, p0180	**Func. diagram:** 8013
P-Group: Messages	**Unit group:** 7_1	**Unit selection:** p0505
Not for motor type: -	**Scaling:** -	**Expert list:** 1
Min	**Max**	**Factory setting**
0.00 [Nm]	20000000.00 [Nm]	0.00 [Nm]

Description: Sets the speed/torque / velocity/force envelope curve for the load monitoring.

Dependency: The following applies: p2188 < p2187
Refer to: p2183, p2187
Refer to: A07926

Note: The lower envelope curve is defined by p2186, p2188 and p2190.

p2189[0...n] Load monitoring torque threshold 3 upper / M_thresh 3 upper

SERVO_S110-DP (Ext msg), SERVO_S110-CAN (Ext msg), SERVO_S110-PN (Ext msg)

Can be changed: U, T	**Calculated:** -	**Access level:** 3
Data type: FloatingPoint32	**Dyn. index:** DDS, p0180	**Func. diagram:** 8013
P-Group: Messages	**Unit group:** 7_1	**Unit selection:** p0505
Not for motor type: -	**Scaling:** -	**Expert list:** 1
Min	**Max**	**Factory setting**
0.00 [Nm]	20000000.00 [Nm]	10000000.00 [Nm]

Description: Sets the speed/torque / velocity/force envelope curve for the load monitoring.

Dependency: The following applies: p2189 > p2190
Refer to: p2184, p2190
Refer to: A07926

Note: The upper envelope curve is defined by p2185, p2187 and p2189.

p2190[0...n] Load monitoring torque threshold 3 lower / M_thresh 3 lower

SERVO_S110-DP (Ext msg), SERVO_S110-CAN (Ext msg), SERVO_S110-PN (Ext msg)

Can be changed: U, T	**Calculated:** -	**Access level:** 3
Data type: FloatingPoint32	**Dyn. index:** DDS, p0180	**Func. diagram:** 8013
P-Group: Messages	**Unit group:** 7_1	**Unit selection:** p0505
Not for motor type: -	**Scaling:** -	**Expert list:** 1
Min	**Max**	**Factory setting**
0.00 [Nm]	20000000.00 [Nm]	0.00 [Nm]

Description: Sets the speed/torque / velocity/force envelope curve for the load monitoring.

Dependency: The following applies: p2190 < p2189
Refer to: p2184, p2189
Refer to: A07926

Note: The lower envelope curve is defined by p2186, p2188 and p2190.

p2192[0...n] Load monitoring delay time / Load monit t_del

SERVO_S110-DP (Ext msg), SERVO_S110-CAN (Ext msg), SERVO_S110-PN (Ext msg)

Can be changed: U, T	**Calculated:** -	**Access level:** 3
Data type: FloatingPoint32	**Dyn. index:** DDS, p0180	**Func. diagram:** 8013
P-Group: Messages	**Unit group:** -	**Unit selection:** -
Not for motor type: -	**Scaling:** -	**Expert list:** 1
Min	**Max**	**Factory setting**
0.00 [s]	65.00 [s]	10.00 [s]

Description: Sets the delay time to evaluate the load monitoring.

p2194[0...n] Torque threshold value 2 / M_thresh val 2

SERVO_S110-DP, SERVO_S110-CAN, SERVO_S110-PN

Can be changed: U, T	**Calculated:** CALC_MOD_LIM_REF	**Access level:** 2
Data type: FloatingPoint32	**Dyn. index:** DDS, p0180	**Func. diagram:** 8012
P-Group: Messages	**Unit group:** -	**Unit selection:** -
Not for motor type: -	**Scaling:** -	**Expert list:** 1
Min	**Max**	**Factory setting**
0.00 [%]	100.00 [%]	90.00 [%]

Description: Sets the torque threshold value for the message "Torque utilization < torque threshold value 2" (BO: r2199.11).
The message "torque setpoint < p2174" (BO: r2198.10) and "torque utilization < p2194" (BO: r2199.11) are only evaluated after the run-up and the delay time has expired.

Dependency: Refer to: r0033, p2195, r2199

p2195[0...n] Torque utilization switch-off delay / M_util t_off

SERVO_S110-DP, SERVO_S110-CAN, SERVO_S110-PN

Can be changed: U, T	**Calculated:** -	**Access level:** 2
Data type: FloatingPoint32	**Dyn. index:** DDS, p0180	**Func. diagram:** 8012
P-Group: Messages	**Unit group:** -	**Unit selection:** -
Not for motor type: -	**Scaling:** -	**Expert list:** 1
Min	**Max**	**Factory setting**
0.0 [ms]	1000.0 [ms]	800.0 [ms]

Description: Sets the switch-off delay time for the negated signal "run-up completed".
The message "torque setpoint < p2174" (BO: r2198.10) and "torque utilization < p2194" (BO: r2199.11) are only evaluated after the run-up and the delay time has expired.

Dependency: Refer to: p2174, p2194

p2196[0...n] Torque utilization scaling / M_util scal

SERVO_S110-DP, SERVO_S110-CAN, SERVO_S110-PN

Can be changed: C2(1, 3), U, T	**Calculated:** -	**Access level:** 1
Data type: FloatingPoint32	**Dyn. index:** DDS, p0180	**Func. diagram:** -
P-Group: Motor	**Unit group:** -	**Unit selection:** -
Not for motor type: -	**Scaling:** -	**Expert list:** 1
Min	**Max**	**Factory setting**
0.00 [%]	1000.00 [%]	100.00 [%]

Description: Sets the scaling factor for torque utilization (r0033).

r2197.1...13 CO/BO: Status word monitoring 1 / ZSW monitor 1

SERVO_S110-DP, SERVO_S110-CAN, SERVO_S110-PN

Can be changed: -	**Calculated:** -	**Access level:** 2
Data type: Unsigned16	**Dyn. index:** -	**Func. diagram:** 1530, 2534
P-Group: Messages	**Unit group:** -	**Unit selection:** -
Not for motor type: -	**Scaling:** -	**Expert list:** 1
Min	**Max**	**Factory setting**
-	-	-

Description: Displays the first status word for monitoring functions.

Bit field:

Bit	Signal name	1 signal	0 signal	FP
01				-
02				-
03	n_act >= 0	Yes	No	8011
06	|n_act| > n_max	Yes	No	8010
07	Speed setp - act val deviation in tolerance t_off	Yes	No	8011
13	|n_act| > n_max error	Yes	No	-

Note:

Re bit 01, 02:

The threshold value is set in p2155 and the hysteresis in p2140.

Re bit 03:

The hysteresis is set in p2150.

Re bit 06:

The hysteresis is set in p2162.

Re bit 07:

The threshold value is set in p2163 and the hysteresis is set in p2164.

r2198.4...12 CO/BO: Status word monitoring 2 / ZSW monitor 2

SERVO_S110-DP, SERVO_S110-CAN, SERVO_S110-PN

Can be changed: -	**Calculated:** -	**Access level:** 2
Data type: Unsigned16	**Dyn. index:** -	**Func. diagram:** 1530, 2536
P-Group: Messages	**Unit group:** -	**Unit selection:** -
Not for motor type: -	**Scaling:** -	**Expert list:** 1
Min	**Max**	**Factory setting**
-	-	-

Description: Displays the second status word for monitoring functions.

Bit field:

Bit	Signal name	1 signal	0 signal	FP
04	|n_set| < p2161	Yes	No	8010
05	n_set > 0	Yes	No	8010
06	Motor blocked	Yes	No	8012
10	|M_set| < torque threshold value 1	Yes	No	8012
11	Load monitoring signals an alarm	Yes	No	8013
12	Load monitoring signals a fault condition	Yes	No	8013

Note:

Re bit 10:

The torque threshold value 1 is set in p2174.

Re bit 12:

This bit is reset after the fault cause disappears, even if the fault itself is still present.

r2199.0...11 CO/BO: Status word monitoring 3 / ZSW monitor 3

SERVO_S110-DP, SERVO_S110-CAN, SERVO_S110-PN

Can be changed: -	**Calculated:** -	**Access level:** 2
Data type: Unsigned16	**Dyn. index:** -	**Func. diagram:** 1530, 2537
P-Group: Messages	**Unit group:** -	**Unit selection:** -
Not for motor type: -	**Scaling:** -	**Expert list:** 1
Min	**Max**	**Factory setting**
-	-	-

Description: Displays the third status word for monitoring functions.

Bit field:

Bit	Signal name	1 signal	0 signal	FP
00	|n_act| < speed threshold value 3	Yes	No	8010
01	f or n comparison value reached or exceeded	Yes	No	8010
04	Speed setp - act val deviation in tolerance t_on	Yes	No	8010
05	Ramp-up/ramp-down completed	Yes	No	8010
06	Current below the zero current threshold	Yes	No	-
11	Torque utilization < torque threshold value 2	Yes	No	8012

Note:
Re bit 00:
The speed threshold value 3 is set in p2161.
Re bit 01:
The comparison value is set in p2141. We recommend setting the hysteresis (p2142) for canceling the bit to a value lower than that in p2141. Otherwise, the bit will never be reset.
Re bit 11:
The torque threshold value 2 is set in p2194.

p2200[0...n] BI: Technology controller enable / Tec_ctrl enable

SERVO_S110-DP (Tech_ctrl), SERVO_S110-CAN (Tech_ctrl), SERVO_S110-PN (Tech_ctrl)

Can be changed: T	**Calculated:** -	**Access level:** 2
Data type: Unsigned32 / Binary	**Dyn. index:** CDS, p0170	**Func. diagram:** 7958
P-Group: Technology	**Unit group:** -	**Unit selection:** -
Not for motor type: -	**Scaling:** -	**Expert list:** 1
Min	**Max**	**Factory setting**
-	-	0

Description: Sets the signal source to switch in/switch out the technology controller.
The technology controller is switched in with a 1 signal.

p2201[0...n] CO: Technology controller fixed value 1 / Tec_ctrl fix val1

SERVO_S110-DP (Tech_ctrl), SERVO_S110-CAN (Tech_ctrl), SERVO_S110-PN (Tech_ctrl)

Can be changed: U, T	**Calculated:** -	**Access level:** 2
Data type: FloatingPoint32	**Dyn. index:** DDS, p0180	**Func. diagram:** 7950
P-Group: Technology	**Unit group:** 9_1	**Unit selection:** p0595
Not for motor type: -	**Scaling:** PERCENT	**Expert list:** 1
Min	**Max**	**Factory setting**
-200.00 [%]	200.00 [%]	10.00 [%]

Description: Sets the value for fixed value 1 of the technology controller.
Dependency: Refer to: p2220, p2221, p2222, p2223, r2224, r2229
Notice: A BICO interconnection to a parameter that belongs to a drive data set always acts on the effective data set.

p2202[0...n] CO: Technology controller fixed value 2 / Tec_ctr fix val 2

SERVO_S110-DP (Tech_ctrl), SERVO_S110-CAN (Tech_ctrl), SERVO_S110-PN (Tech_ctrl)

Can be changed: U, T	**Calculated:** -	**Access level:** 2
Data type: FloatingPoint32	**Dyn. index:** DDS, p0180	**Func. diagram:** 7950
P-Group: Technology	**Unit group:** 9_1	**Unit selection:** p0595
Not for motor type: -	**Scaling:** PERCENT	**Expert list:** 1
Min	**Max**	**Factory setting**
-200.00 [%]	200.00 [%]	20.00 [%]

Description: Sets the value for fixed value 2 of the technology controller.
Dependency: Refer to: p2220, p2221, p2222, p2223, r2224, r2229
Notice: A BICO interconnection to a parameter that belongs to a drive data set always acts on the effective data set.

p2203[0...n] CO: Technology controller fixed value 3 / Tec_ctr fix val 3

SERVO_S110-DP (Tech_ctrl), SERVO_S110-CAN (Tech_ctrl), SERVO_S110-PN (Tech_ctrl)

Can be changed: U, T	**Calculated:** -	**Access level:** 2
Data type: FloatingPoint32	**Dyn. index:** DDS, p0180	**Func. diagram:** 7950
P-Group: Technology	**Unit group:** 9_1	**Unit selection:** p0595
Not for motor type: -	**Scaling:** PERCENT	**Expert list:** 1
Min	**Max**	**Factory setting**
-200.00 [%]	200.00 [%]	30.00 [%]

Description: Sets the value for fixed value 3 of the technology controller.
Dependency: Refer to: p2220, p2221, p2222, p2223, r2224, r2229
Notice: A BICO interconnection to a parameter that belongs to a drive data set always acts on the effective data set.

p2204[0...n] CO: Technology controller fixed value 4 / Tec_ctr fix val 4

SERVO_S110-DP (Tech_ctrl), SERVO_S110-CAN (Tech_ctrl), SERVO_S110-PN (Tech_ctrl)

Can be changed: U, T	**Calculated:** -	**Access level:** 2
Data type: FloatingPoint32	**Dyn. index:** DDS, p0180	**Func. diagram:** 7950
P-Group: Technology	**Unit group:** 9_1	**Unit selection:** p0595
Not for motor type: -	**Scaling:** PERCENT	**Expert list:** 1
Min	**Max**	**Factory setting**
-200.00 [%]	200.00 [%]	40.00 [%]

Description: Sets the value for fixed value 4 of the technology controller.
Dependency: Refer to: p2220, p2221, p2222, p2223, r2224, r2229
Notice: A BICO interconnection to a parameter that belongs to a drive data set always acts on the effective data set.

p2205[0...n] CO: Technology controller fixed value 5 / Tec_ctr fix val 5

SERVO_S110-DP (Tech_ctrl), SERVO_S110-CAN (Tech_ctrl), SERVO_S110-PN (Tech_ctrl)

Can be changed: U, T	**Calculated:** -	**Access level:** 2
Data type: FloatingPoint32	**Dyn. index:** DDS, p0180	**Func. diagram:** 7950
P-Group: Technology	**Unit group:** 9_1	**Unit selection:** p0595
Not for motor type: -	**Scaling:** PERCENT	**Expert list:** 1
Min	**Max**	**Factory setting**
-200.00 [%]	200.00 [%]	50.00 [%]

Description: Sets the value for fixed value 5 of the technology controller.
Dependency: Refer to: p2220, p2221, p2222, p2223, r2224, r2229
Notice: A BICO interconnection to a parameter that belongs to a drive data set always acts on the effective data set.

p2206[0...n] CO: Technology controller fixed value 6 / Tec_ctr fix val 6

SERVO_S110-DP (Tech_ctrl), SERVO_S110-CAN (Tech_ctrl), SERVO_S110-PN (Tech_ctrl)

Can be changed: U, T	**Calculated:** -	**Access level:** 2
Data type: FloatingPoint32	**Dyn. index:** DDS, p0180	**Func. diagram:** 7950
P-Group: Technology	**Unit group:** 9_1	**Unit selection:** p0595
Not for motor type: -	**Scaling:** PERCENT	**Expert list:** 1
Min	**Max**	**Factory setting**
-200.00 [%]	200.00 [%]	60.00 [%]

Description: Sets the value for fixed value 6 of the technology controller.
Dependency: Refer to: p2220, p2221, p2222, p2223, r2224, r2229
Notice: A BICO interconnection to a parameter that belongs to a drive data set always acts on the effective data set.

p2207[0...n] CO: Technology controller fixed value 7 / Tec_ctr fix val 7

SERVO_S110-DP (Tech_ctrl), SERVO_S110-CAN (Tech_ctrl), SERVO_S110-PN (Tech_ctrl)

Can be changed: U, T	**Calculated:** -	**Access level:** 2
Data type: FloatingPoint32	**Dyn. index:** DDS, p0180	**Func. diagram:** 7950
P-Group: Technology	**Unit group:** 9_1	**Unit selection:** p0595
Not for motor type: -	**Scaling:** PERCENT	**Expert list:** 1
Min	**Max**	**Factory setting**
-200.00 [%]	200.00 [%]	70.00 [%]

Description: Sets the value for fixed value 7 of the technology controller.
Dependency: Refer to: p2220, p2221, p2222, p2223, r2224, r2229
Notice: A BICO interconnection to a parameter that belongs to a drive data set always acts on the effective data set.

p2208[0...n] CO: Technology controller fixed value 8 / Tec_ctr fix val 8

SERVO_S110-DP (Tech_ctrl), SERVO_S110-CAN (Tech_ctrl), SERVO_S110-PN (Tech_ctrl)

Can be changed: U, T	**Calculated:** -	**Access level:** 2
Data type: FloatingPoint32	**Dyn. index:** DDS, p0180	**Func. diagram:** 7950
P-Group: Technology	**Unit group:** 9_1	**Unit selection:** p0595
Not for motor type: -	**Scaling:** PERCENT	**Expert list:** 1
Min	**Max**	**Factory setting**
-200.00 [%]	200.00 [%]	80.00 [%]

Description: Sets the value for fixed value 8 of the technology controller.
Dependency: Refer to: p2220, p2221, p2222, p2223, r2224, r2229
Notice: A BICO interconnection to a parameter that belongs to a drive data set always acts on the effective data set.

p2209[0...n] CO: Technology controller fixed value 9 / Tec_ctr fix val 9

SERVO_S110-DP (Tech_ctrl), SERVO_S110-CAN (Tech_ctrl), SERVO_S110-PN (Tech_ctrl)

Can be changed: U, T	**Calculated:** -	**Access level:** 2
Data type: FloatingPoint32	**Dyn. index:** DDS, p0180	**Func. diagram:** 7950
P-Group: Technology	**Unit group:** 9_1	**Unit selection:** p0595
Not for motor type: -	**Scaling:** PERCENT	**Expert list:** 1
Min	**Max**	**Factory setting**
-200.00 [%]	200.00 [%]	90.00 [%]

Description: Sets the value for fixed value 9 of the technology controller.
Dependency: Refer to: p2220, p2221, p2222, p2223, r2224, r2229
Notice: A BICO interconnection to a parameter that belongs to a drive data set always acts on the effective data set.

p2210[0...n] CO: Technology controller fixed value 10 / Tec_ctr fix val 10

SERVO_S110-DP (Tech_ctrl), SERVO_S110-CAN (Tech_ctrl), SERVO_S110-PN (Tech_ctrl)

Can be changed: U, T	**Calculated:** -	**Access level:** 2
Data type: FloatingPoint32	**Dyn. index:** DDS, p0180	**Func. diagram:** 7950
P-Group: Technology	**Unit group:** 9_1	**Unit selection:** p0595
Not for motor type: -	**Scaling:** PERCENT	**Expert list:** 1
Min	**Max**	**Factory setting**
-200.00 [%]	200.00 [%]	100.00 [%]

Description: Sets the value for fixed value 10 of the technology controller.
Dependency: Refer to: p2220, p2221, p2222, p2223, r2224, r2229
Notice: A BICO interconnection to a parameter that belongs to a drive data set always acts on the effective data set.

p2211[0...n] CO: Technology controller fixed value 11 / Tec_ctr fix val 11

SERVO_S110-DP (Tech_ctrl), SERVO_S110-CAN (Tech_ctrl), SERVO_S110-PN (Tech_ctrl)

Can be changed: U, T	**Calculated:** -	**Access level:** 2
Data type: FloatingPoint32	**Dyn. index:** DDS, p0180	**Func. diagram:** 7950
P-Group: Technology	**Unit group:** 9_1	**Unit selection:** p0595
Not for motor type: -	**Scaling:** PERCENT	**Expert list:** 1
Min	**Max**	**Factory setting**
-200.00 [%]	200.00 [%]	110.00 [%]

Description: Sets the value for fixed value 11 of the technology controller.
Dependency: Refer to: p2220, p2221, p2222, p2223, r2224, r2229
Notice: A BICO interconnection to a parameter that belongs to a drive data set always acts on the effective data set.

p2212[0...n] CO: Technology controller fixed value 12 / Tec_ctr fix val 12

SERVO_S110-DP (Tech_ctrl), SERVO_S110-CAN (Tech_ctrl), SERVO_S110-PN (Tech_ctrl)

Can be changed: U, T	**Calculated:** -	**Access level:** 2
Data type: FloatingPoint32	**Dyn. index:** DDS, p0180	**Func. diagram:** 7950
P-Group: Technology	**Unit group:** 9_1	**Unit selection:** p0595
Not for motor type: -	**Scaling:** PERCENT	**Expert list:** 1
Min	**Max**	**Factory setting**
-200.00 [%]	200.00 [%]	120.00 [%]

Description: Sets the value for fixed value 12 of the technology controller.
Dependency: Refer to: p2220, p2221, p2222, p2223, r2224, r2229
Notice: A BICO interconnection to a parameter that belongs to a drive data set always acts on the effective data set.

p2213[0...n] CO: Technology controller fixed value 13 / Tec_ctr fix val 13

SERVO_S110-DP (Tech_ctrl), SERVO_S110-CAN (Tech_ctrl), SERVO_S110-PN (Tech_ctrl)

Can be changed: U, T	**Calculated:** -	**Access level:** 2
Data type: FloatingPoint32	**Dyn. index:** DDS, p0180	**Func. diagram:** 7950
P-Group: Technology	**Unit group:** 9_1	**Unit selection:** p0595
Not for motor type: -	**Scaling:** PERCENT	**Expert list:** 1
Min	**Max**	**Factory setting**
-200.00 [%]	200.00 [%]	130.00 [%]

Description: Sets the value for fixed value 13 of the technology controller.
Dependency: Refer to: p2220, p2221, p2222, p2223, r2224, r2229
Notice: A BICO interconnection to a parameter that belongs to a drive data set always acts on the effective data set.

p2214[0...n] CO: Technology controller fixed value 14 / Tec_ctr fix val 14

SERVO_S110-DP (Tech_ctrl), SERVO_S110-CAN (Tech_ctrl), SERVO_S110-PN (Tech_ctrl)

Can be changed: U, T	**Calculated:** -	**Access level:** 2
Data type: FloatingPoint32	**Dyn. index:** DDS, p0180	**Func. diagram:** 7950
P-Group: Technology	**Unit group:** 9_1	**Unit selection:** p0595
Not for motor type: -	**Scaling:** PERCENT	**Expert list:** 1
Min	**Max**	**Factory setting**
-200.00 [%]	200.00 [%]	140.00 [%]

Description: Sets the value for fixed value 14 of the technology controller.
Dependency: Refer to: p2220, p2221, p2222, p2223, r2224, r2229
Notice: A BICO interconnection to a parameter that belongs to a drive data set always acts on the effective data set.

p2215[0...n] CO: Technology controller fixed value 15 / Tec_ctr fix val 15

SERVO_S110-DP (Tech_ctrl), SERVO_S110-CAN (Tech_ctrl), SERVO_S110-PN (Tech_ctrl)

Can be changed: U, T	**Calculated:** -	**Access level:** 2
Data type: FloatingPoint32	**Dyn. index:** DDS, p0180	**Func. diagram:** 7950
P-Group: Technology	**Unit group:** 9_1	**Unit selection:** p0595
Not for motor type: -	**Scaling:** PERCENT	**Expert list:** 1
Min	**Max**	**Factory setting**
-200.00 [%]	200.00 [%]	150.00 [%]

Description: Sets the value for fixed value 15 of the technology controller.
Dependency: Refer to: p2220, p2221, p2222, p2223, r2224, r2229
Notice: A BICO interconnection to a parameter that belongs to a drive data set always acts on the effective data set.

p2216[0...n] Technology controller fixed value selection method / Tec_ctr FixVal sel

SERVO_S110-DP (Tech_ctrl), SERVO_S110-CAN (Tech_ctrl), SERVO_S110-PN (Tech_ctrl)

Can be changed: T	**Calculated:** -	**Access level:** 2
Data type: Integer16	**Dyn. index:** DDS, p0180	**Func. diagram:** -
P-Group: Technology	**Unit group:** -	**Unit selection:** -
Not for motor type: -	**Scaling:** -	**Expert list:** 1
Min	**Max**	**Factory setting**
1	2	2

Description: Selects the method that can be used to select the fixed setpoints.
Value:
1: Fixed value selection direct
2: Fixed value selection binary

p2220[0...n] BI: Technology controller fixed value selection bit 0 / Tec_ctrl sel bit 0

SERVO_S110-DP (Tech_ctrl), SERVO_S110-CAN (Tech_ctrl), SERVO_S110-PN (Tech_ctrl)

Can be changed: T	**Calculated:** -	**Access level:** 3
Data type: Unsigned32 / Binary	**Dyn. index:** CDS, p0170	**Func. diagram:** 7950
P-Group: Commands	**Unit group:** -	**Unit selection:** -
Not for motor type: -	**Scaling:** -	**Expert list:** 1
Min	**Max**	**Factory setting**
-	-	0

Description: Sets the signal source to select the fixed value of the technology controller.
Dependency: Refer to: p2221, p2222, p2223

p2221[0...n] BI: Technology controller fixed value selection bit 1 / Tec_ctrl sel bit 1

SERVO_S110-DP (Tech_ctrl), SERVO_S110-CAN (Tech_ctrl), SERVO_S110-PN (Tech_ctrl)

Can be changed: T	**Calculated:** -	**Access level:** 3
Data type: Unsigned32 / Binary	**Dyn. index:** CDS, p0170	**Func. diagram:** 7950
P-Group: Commands	**Unit group:** -	**Unit selection:** -
Not for motor type: -	**Scaling:** -	**Expert list:** 1
Min	**Max**	**Factory setting**
-	-	0

Description: Sets the signal source to select the fixed value of the technology controller.
Dependency: Refer to: p2220, p2222, p2223

p2222[0...n] BI: Technology controller fixed value selection bit 2 / Tec_ctrl sel bit 2

SERVO_S110-DP (Tech_ctrl), SERVO_S110-CAN (Tech_ctrl), SERVO_S110-PN (Tech_ctrl)

Can be changed: T	**Calculated:** -	**Access level:** 3
Data type: Unsigned32 / Binary	**Dyn. index:** CDS, p0170	**Func. diagram:** 7950
P-Group: Commands	**Unit group:** -	**Unit selection:** -
Not for motor type: -	**Scaling:** -	**Expert list:** 1
Min	**Max**	**Factory setting**
-	-	0

Description: Sets the signal source to select the fixed value of the technology controller.

Dependency: Refer to: p2220, p2221, p2223

p2223[0...n] BI: Technology controller fixed value selection bit 3 / Tec_ctrl sel bit 3

SERVO_S110-DP (Tech_ctrl), SERVO_S110-CAN (Tech_ctrl), SERVO_S110-PN (Tech_ctrl)

Can be changed: T	**Calculated:** -	**Access level:** 3
Data type: Unsigned32 / Binary	**Dyn. index:** CDS, p0170	**Func. diagram:** 7950
P-Group: Commands	**Unit group:** -	**Unit selection:** -
Not for motor type: -	**Scaling:** -	**Expert list:** 1
Min	**Max**	**Factory setting**
-	-	0

Description: Sets the signal source to select the fixed value of the technology controller.

Dependency: Refer to: p2220, p2221, p2222

r2224 CO: Technology controller fixed value effective / Tec_ctr FixVal eff

SERVO_S110-DP (Tech_ctrl), SERVO_S110-CAN (Tech_ctrl), SERVO_S110-PN (Tech_ctrl)

Can be changed: -	**Calculated:** -	**Access level:** 2
Data type: FloatingPoint32	**Dyn. index:** -	**Func. diagram:** 7950
P-Group: Technology	**Unit group:** 9_1	**Unit selection:** p0595
Not for motor type: -	**Scaling:** PERCENT	**Expert list:** 1
Min	**Max**	**Factory setting**
- [%]	- [%]	- [%]

Description: Displays the selected and effective fixed value of the technology controller.

Dependency: Refer to: r2229

r2225.0 CO/BO: Technology controller fixed value selection status word / Tec_ctr FixVal ZSW

SERVO_S110-DP (Tech_ctrl), SERVO_S110-CAN (Tech_ctrl), SERVO_S110-PN (Tech_ctrl)

Can be changed: -	**Calculated:** -	**Access level:** 3
Data type: Unsigned16	**Dyn. index:** -	**Func. diagram:** -
P-Group: Technology	**Unit group:** -	**Unit selection:** -
Not for motor type: -	**Scaling:** -	**Expert list:** 1
Min	**Max**	**Factory setting**
-	-	-

Description: Displays the status word for the fixed value selection of the technology controller.

Bit field:

Bit	Signal name	1 signal	0 signal	FP
00	Technology controller fixed value selected	Yes	No	7950, 7951

r2229 Technology controller number actual / Tec_ctrl No. act

SERVO_S110-DP (Tech_ctrl), SERVO_S110-CAN (Tech_ctrl), SERVO_S110-PN (Tech_ctrl)

Can be changed: -	**Calculated:** -	**Access level:** 2
Data type: Unsigned32	**Dyn. index:** -	**Func. diagram:** 7950
P-Group: Technology	**Unit group:** -	**Unit selection:** -
Not for motor type: -	**Scaling:** -	**Expert list:** 1
Min	**Max**	**Factory setting**
-	-	-

Description: Displays the number of the selected fixed setpoint of the technology controller.

Dependency: Refer to: r2224

p2230[0...n] Technology controller motorized potentiometer configuration / Tec_ctr mop config

SERVO_S110-DP (Tech_ctrl), SERVO_S110-CAN (Tech_ctrl), SERVO_S110-PN (Tech_ctrl)

Can be changed: U, T	**Calculated:** -	**Access level:** 3
Data type: Unsigned32	**Dyn. index:** DDS, p0180	**Func. diagram:** 7954
P-Group: Technology	**Unit group:** -	**Unit selection:** -
Not for motor type: -	**Scaling:** -	**Expert list:** 1
Min	**Max**	**Factory setting**
-	-	0000 0100 bin

Description: Sets the configuration for the motorized potentiometer of the technology controller.

Bit field:

Bit	Signal name	1 signal	0 signal	FP
00	Data save active	Yes	No	-
02	Initial rounding-off active	Yes	No	-
03	Non-volatile data save active for p2230.0 = 1	Yes	No	-
04	Ramp-function generator always active	Yes	No	-

Dependency: Refer to: r2231, p2240

Note: Re bit 00:

0: The setpoint for the motorized potentiometer is not saved and after ON is entered using p2240.

1: The setpoint for the motorized potentiometer is saved and after ON is entered using r2231. In order to save in a non-volatile fashion, bit 03 should be set to 1.

Re bit 02:

0: Without initial rounding-off

1: With initial rounding-off.

The selected ramp-up/down time is correspondingly exceeded. The initial rounding-off is a sensitive way of specifying small changes (progressive reaction when keys are pressed). The jerk for initial rounding is independent of the ramp-up time and only depends on the selected maximum value (p2237).

It is calculated as follows:

r = 0.0001 x max(p2237, |p2238|) [%] / 0.13^2 [s^2]

The jerk is effective until the maximum acceleration is reached (a_max = p2237 [%] / p2247 [s] or a_max = p2238 [%] / p2248 [s]), after which the drive continues to run linearly with constant acceleration. The higher the maximum acceleration (the lower that p2247 is), the longer the ramp-up time increases with respect to the set ramp-up time.

Re bit 03:

0: Non-volatile data save de-activated.

1. The setpoint for the motorized potentiometer is saved in a non-volatile fashion (for p2230.0 = 1).

Re bit 04:

When the bit is set, the ramp-function generator is computed independent of the pulse enable. The actual output value of the motorized potentiometer is always in r2250.

r2231 Technology controller motorized potentiometer setpoint memory / Tec_ctrl mop mem

SERVO_S110-DP (Tech_ctrl), SERVO_S110-CAN (Tech_ctrl), SERVO_S110-PN (Tech_ctrl)

Can be changed: -	**Calculated:** -	**Access level:** 2
Data type: FloatingPoint32	**Dyn. index:** -	**Func. diagram:** 7954
P-Group: Technology	**Unit group:** 9_1	**Unit selection:** p0595
Not for motor type: -	**Scaling:** -	**Expert list:** 1
Min	**Max**	**Factory setting**
- [%]	- [%]	- [%]

Description: Displays the setpoint memory for the motorized potentiometer of the technology controller.

For p2230.0 = 1, the last setpoint that was saved is entered after ON.

Dependency: Refer to: p2230

p2235[0...n] BI: Technology controller motorized potentiometer raise setpoint / Tec_ctrl mop raise

SERVO_S110-DP (Tech_ctrl), SERVO_S110-CAN (Tech_ctrl), SERVO_S110-PN (Tech_ctrl)

Can be changed: T	**Calculated:** -	**Access level:** 3
Data type: Unsigned32 / Binary	**Dyn. index:** CDS, p0170	**Func. diagram:** 7954
P-Group: Commands	**Unit group:** -	**Unit selection:** -
Not for motor type: -	**Scaling:** -	**Expert list:** 1
Min	**Max**	**Factory setting**
-	-	0

Description: Sets the signal source to continually increase the setpoint for the motorized potentiometer of the technology controller.

The setpoint change (CO: r2250) depends on the set ramp-up time (p2247) and the duration of the signal that is present (BI: p2235).

Dependency: Refer to: p2236

p2236[0...n] BI: Technology controller motorized potentiometer lower setpoint / Tec_ctrl mop lower

SERVO_S110-DP (Tech_ctrl), SERVO_S110-CAN (Tech_ctrl), SERVO_S110-PN (Tech_ctrl)

Can be changed: T	**Calculated:** -	**Access level:** 3
Data type: Unsigned32 / Binary	**Dyn. index:** CDS, p0170	**Func. diagram:** 7954
P-Group: Commands	**Unit group:** -	**Unit selection:** -
Not for motor type: -	**Scaling:** -	**Expert list:** 1
Min	**Max**	**Factory setting**
-	-	0

Description: Sets the signal source to continually reduce the setpoint for the motorized potentiometer of the technology controller.

The setpoint change (CO: r2250) depends on the set ramp-down time (p2248) and the duration of the signal that is present (BI: p2236).

Dependency: Refer to: p2235

p2237[0...n] Technology controller motorized potentiometer maximum value / Tec_ctrl mop max

SERVO_S110-DP (Tech_ctrl), SERVO_S110-CAN (Tech_ctrl), SERVO_S110-PN (Tech_ctrl)

Can be changed: U, T	**Calculated:** -	**Access level:** 2
Data type: FloatingPoint32	**Dyn. index:** DDS, p0180	**Func. diagram:** 7954
P-Group: Technology	**Unit group:** 9_1	**Unit selection:** p0595
Not for motor type: -	**Scaling:** -	**Expert list:** 1
Min	**Max**	**Factory setting**
-200.00 [%]	200.00 [%]	100.00 [%]

Description: Sets the maximum value for the motorized potentiometer of the technology controller.

Dependency: Refer to: p2238

p2238[0...n] Technology controller motorized potentiometer minimum value / Tec_ctrl mop min

SERVO_S110-DP (Tech_ctrl), SERVO_S110-CAN (Tech_ctrl), SERVO_S110-PN (Tech_ctrl)

Can be changed: U, T	**Calculated:** -	**Access level:** 2
Data type: FloatingPoint32	**Dyn. index:** DDS, p0180	**Func. diagram:** 7954
P-Group: Technology	**Unit group:** 9_1	**Unit selection:** p0595
Not for motor type: -	**Scaling:** -	**Expert list:** 1
Min	**Max**	**Factory setting**
-200.00 [%]	200.00 [%]	-100.00 [%]

Description: Sets the minimum value for the motorized potentiometer of the technology controller.

Dependency: Refer to: p2237

p2240[0...n] Technology controller motorized potentiometer starting value / Tec_ctrl mop start

SERVO_S110-DP (Tech_ctrl), SERVO_S110-CAN (Tech_ctrl), SERVO_S110-PN (Tech_ctrl)

Can be changed: U, T	**Calculated:** -	**Access level:** 2
Data type: FloatingPoint32	**Dyn. index:** DDS, p0180	**Func. diagram:** 7954
P-Group: Technology	**Unit group:** 9_1	**Unit selection:** p0595
Not for motor type: -	**Scaling:** -	**Expert list:** 1
Min	**Max**	**Factory setting**
-200.00 [%]	200.00 [%]	0.00 [%]

Description: Sets the starting value for the motorized potentiometer of the technology controller.
For p2230.0 = 0, this setpoint is entered after ON.

Dependency: Refer to: p2230

r2245 CO: Technology controller mot. potentiometer setpoint before RFG / Tec_ctr mop befRFG

SERVO_S110-DP (Tech_ctrl), SERVO_S110-CAN (Tech_ctrl), SERVO_S110-PN (Tech_ctrl)

Can be changed: -	**Calculated:** -	**Access level:** 2
Data type: FloatingPoint32	**Dyn. index:** -	**Func. diagram:** 7954
P-Group: Technology	**Unit group:** 9_1	**Unit selection:** p0595
Not for motor type: -	**Scaling:** PERCENT	**Expert list:** 1
Min	**Max**	**Factory setting**
- [%]	- [%]	- [%]

Description: Sets the effective setpoint in front of the internal motorized potentiometer ramp-function generator of the technology controller.

Dependency: Refer to: r2250

p2247[0...n] Technology controller motorized potentiometer ramp-up time / Tec_ctr mop t_r-up

SERVO_S110-DP (Tech_ctrl), SERVO_S110-CAN (Tech_ctrl), SERVO_S110-PN (Tech_ctrl)

Can be changed: U, T	**Calculated:** -	**Access level:** 2
Data type: FloatingPoint32	**Dyn. index:** DDS, p0180	**Func. diagram:** 7954
P-Group: Technology	**Unit group:** -	**Unit selection:** -
Not for motor type: -	**Scaling:** -	**Expert list:** 1
Min	**Max**	**Factory setting**
0.0 [s]	1000.0 [s]	10.0 [s]

Description: Sets the ramp-up time for the internal ramp-function generator for the motorized potentiometer of the technology controller.

Dependency: Refer to: p2248

Note: The time is referred to 100 %.
When the initial rounding-off is activated (p2230.2 = 1) the ramp-up is correspondingly extended.

p2248[0...n] Technology controller motorized potentiometer ramp-down time / Tec_ctrMop t_rdown

SERVO_S110-DP (Tech_ctrl), SERVO_S110-CAN (Tech_ctrl), SERVO_S110-PN (Tech_ctrl)

Can be changed: U, T	**Calculated:** -	**Access level:** 2
Data type: FloatingPoint32	**Dyn. index:** DDS, p0180	**Func. diagram:** 7954
P-Group: Technology	**Unit group:** -	**Unit selection:** -
Not for motor type: -	**Scaling:** -	**Expert list:** 1
Min	**Max**	**Factory setting**
0.0 [s]	1000.0 [s]	10.0 [s]

Description: Sets the ramp-down time for the internal ramp-function generator for the motorized potentiometer of the technology controller.

Dependency: Refer to: p2247

Note: The time is referred to 100 %.
When the initial rounding-off is activated (p2230.2 = 1) the ramp-down is correspondingly extended.

r2250 CO: Technology controller motorized potentiometer setpoint after RFG / Tec_ctr mop aftRFG

SERVO_S110-DP (Tech_ctrl), SERVO_S110-CAN (Tech_ctrl), SERVO_S110-PN (Tech_ctrl)

Can be changed: -	**Calculated:** -	**Access level:** 2
Data type: FloatingPoint32	**Dyn. index:** -	**Func. diagram:** 7954
P-Group: Technology	**Unit group:** 9_1	**Unit selection:** p0595
Not for motor type: -	**Scaling:** PERCENT	**Expert list:** 1
Min	**Max**	**Factory setting**
- [%]	- [%]	- [%]

Description: Displays the effective setpoint after the internal ramp-function generator for the motorized potentiometer of the technology controller.

Dependency: Refer to: r2245

p2252 Technology controller configuration / Tec_ctrl config

SERVO_S110-DP (Tech_ctrl), SERVO_S110-CAN (Tech_ctrl), SERVO_S110-PN (Tech_ctrl)

Can be changed: U, T	**Calculated:** -	**Access level:** 3
Data type: Unsigned16	**Dyn. index:** -	**Func. diagram:** -
P-Group: Modulation	**Unit group:** -	**Unit selection:** -
Not for motor type: -	**Scaling:** -	**Expert list:** 1
Min	**Max**	**Factory setting**
-	-	0111 bin

Description: Sets the configuration of the technology controller.

Bit field:

Bit	Signal name	1 signal	0 signal	FP
00	Ramp-up/down time independent of setpoint sign	Yes	No	-
01	Integrator independent of Kp	Yes	No	-
02	Output signal without ramp active	Yes	No	-
03	Actual value limiting	Yes	No	-

Dependency: Refer to: p2257, p2258, p2280, p2285

Note:

Re bit 00 = 0:

The ramp-down time (p2258) switches to the ramp-up time (p2257) when the sign for the output signal r2260 changes. When the sign changes, the output signal is kept at zero for one arithmetic cycle.

Re bit 00 = 1:

When r2260 exhibits a positive gradient, the ramp-up time (p2257) is active; when it exhibits a negative gradient, the ramp-down time (p2258) is active. The sign for r2260 does not have any effect on the ramp time.

Re bit 01 = 0:

The integration time of the PID controller is evaluated with the gain factor Kp (p2280) (p2285 = integral time).

Re bit 01 = 1:

The integration time of the PID controller is independent of the gain factor (p2285 = integration time) if p2280 > 0.

Re bit 02 = 0:

When the PID controller is de-activated via p2200, the output signal r2294 is reduced to zero via the ramp-down time p2293.

Re bit 02 = 1:

When the PID controller is de-activated via p2200, the output signal r2294 is set directly to zero.

Re bit 03 = 0:

The actual values are not limited by p2267 and p2268.

Re bit 03 = 1:

The actual values are limited by p2267 and p2268.

p2253[0...n] CI: Technology controller setpoint 1 / Tec_ctrl setp 1

SERVO_S110-DP (Tech_ctrl), SERVO_S110-CAN (Tech_ctrl), SERVO_S110-PN (Tech_ctrl)

Can be changed: U, T	**Calculated:** -	**Access level:** 2
Data type: Unsigned32 / FloatingPoint32	**Dyn. index:** CDS, p0170	**Func. diagram:** 7958
P-Group: Technology	**Unit group:** -	**Unit selection:** -
Not for motor type: -	**Scaling:** PERCENT	**Expert list:** 1
Min	**Max**	**Factory setting**
-	-	0

Description: Sets the signal source for the setpoint 1 of the technology controller.
Dependency: Refer to: p2254, p2255

p2254[0...n] CI: Technology controller setpoint 2 / Tec_ctrl setp 2

SERVO_S110-DP (Tech_ctrl), SERVO_S110-CAN (Tech_ctrl), SERVO_S110-PN (Tech_ctrl)

Can be changed: U, T	**Calculated:** -	**Access level:** 3
Data type: Unsigned32 / FloatingPoint32	**Dyn. index:** CDS, p0170	**Func. diagram:** 7958
P-Group: Technology	**Unit group:** -	**Unit selection:** -
Not for motor type: -	**Scaling:** PERCENT	**Expert list:** 1
Min	**Max**	**Factory setting**
-	-	0

Description: Sets the signal source for the setpoint 2 of the technology controller.
Dependency: Refer to: p2253, p2256

p2255 Technology controller setpoint 1 scaling / Tec_ctrl set1 scal

SERVO_S110-DP (Tech_ctrl), SERVO_S110-CAN (Tech_ctrl), SERVO_S110-PN (Tech_ctrl)

Can be changed: U, T	**Calculated:** -	**Access level:** 3
Data type: FloatingPoint32	**Dyn. index:** -	**Func. diagram:** 7958
P-Group: Technology	**Unit group:** -	**Unit selection:** -
Not for motor type: -	**Scaling:** -	**Expert list:** 1
Min	**Max**	**Factory setting**
0.00 [%]	100.00 [%]	100.00 [%]

Description: Sets the scaling for the setpoint 1 of the technology controller.
Dependency: Refer to: p2253

p2256 Technology controller setpoint 2 scaling / Tec_ctrl set2 scal

SERVO_S110-DP (Tech_ctrl), SERVO_S110-CAN (Tech_ctrl), SERVO_S110-PN (Tech_ctrl)

Can be changed: U, T	**Calculated:** -	**Access level:** 3
Data type: FloatingPoint32	**Dyn. index:** -	**Func. diagram:** 7958
P-Group: Technology	**Unit group:** -	**Unit selection:** -
Not for motor type: -	**Scaling:** -	**Expert list:** 1
Min	**Max**	**Factory setting**
0.00 [%]	100.00 [%]	100.00 [%]

Description: Sets the scaling for the setpoint 2 of the technology controller.
Dependency: Refer to: p2254

p2257 Technology controller ramp-up time / Tec_ctrl t_ramp-up

SERVO_S110-DP (Tech_ctrl), SERVO_S110-CAN (Tech_ctrl), SERVO_S110-PN (Tech_ctrl)

Can be changed: U, T	**Calculated:** -	**Access level:** 2
Data type: FloatingPoint32	**Dyn. index:** -	**Func. diagram:** 7958
P-Group: Technology	**Unit group:** -	**Unit selection:** -
Not for motor type: -	**Scaling:** -	**Expert list:** 1
Min	**Max**	**Factory setting**
0.00 [s]	650.00 [s]	1.00 [s]

Description: Sets the ramp-up time of the technology controller.
Dependency: Refer to: p2252, p2258
Note: The ramp-up time is referred to 100 %.

p2258 Technology controller ramp-down time / Tec_ctrl t_ramp-dn

SERVO_S110-DP (Tech_ctrl), SERVO_S110-CAN (Tech_ctrl), SERVO_S110-PN (Tech_ctrl)

Can be changed: U, T	**Calculated:** -	**Access level:** 2
Data type: FloatingPoint32	**Dyn. index:** -	**Func. diagram:** 7958
P-Group: Technology	**Unit group:** -	**Unit selection:** -
Not for motor type: -	**Scaling:** -	**Expert list:** 1
Min	**Max**	**Factory setting**
0.00 [s]	650.00 [s]	1.00 [s]

Description: Sets the ramp-down time of the technology controller.

Dependency: Refer to: p2252, p2257

Note: The ramp-down time is referred to 100 %.

r2260 CO: Technology controller setpoint after ramp-function generator / Tec_ctr set aftRFG

SERVO_S110-DP (Tech_ctrl), SERVO_S110-CAN (Tech_ctrl), SERVO_S110-PN (Tech_ctrl)

Can be changed: -	**Calculated:** -	**Access level:** 2
Data type: FloatingPoint32	**Dyn. index:** -	**Func. diagram:** 7958
P-Group: Technology	**Unit group:** 9_1	**Unit selection:** p0595
Not for motor type: -	**Scaling:** PERCENT	**Expert list:** 1
Min	**Max**	**Factory setting**
- [%]	- [%]	- [%]

Description: Sets the setpoint after the ramp-function generator of the technology controller.

p2261 Technology controller setpoint filter time constant / Tec_ctrl set T

SERVO_S110-DP (Tech_ctrl), SERVO_S110-CAN (Tech_ctrl), SERVO_S110-PN (Tech_ctrl)

Can be changed: U, T	**Calculated:** -	**Access level:** 3
Data type: FloatingPoint32	**Dyn. index:** -	**Func. diagram:** 7958
P-Group: Technology	**Unit group:** -	**Unit selection:** -
Not for motor type: -	**Scaling:** -	**Expert list:** 1
Min	**Max**	**Factory setting**
0.000 [s]	60.000 [s]	0.000 [s]

Description: Sets the time constant for the setpoint filter (PT1) of the technology controller.

r2262 CO: Technology controller setpoint after filter / Tec_ctr set aftFlt

SERVO_S110-DP (Tech_ctrl), SERVO_S110-CAN (Tech_ctrl), SERVO_S110-PN (Tech_ctrl)

Can be changed: -	**Calculated:** -	**Access level:** 3
Data type: FloatingPoint32	**Dyn. index:** -	**Func. diagram:** 7958
P-Group: Technology	**Unit group:** 9_1	**Unit selection:** p0595
Not for motor type: -	**Scaling:** PERCENT	**Expert list:** 1
Min	**Max**	**Factory setting**
- [%]	- [%]	- [%]

Description: Displays the smoothed setpoint after the setpoint filter (PT1) of the technology controller.

p2263 Technology controller type / Tec_ctrl type

SERVO_S110-DP (Tech_ctrl), SERVO_S110-CAN (Tech_ctrl), SERVO_S110-PN (Tech_ctrl)

Can be changed: T	**Calculated:** -	**Access level:** 3
Data type: Integer16	**Dyn. index:** -	**Func. diagram:** 7958
P-Group: Technology	**Unit group:** -	**Unit selection:** -
Not for motor type: -	**Scaling:** -	**Expert list:** 1
Min	**Max**	**Factory setting**
0	1	0

Description: Sets the technology controller type.

Value:
0: D component in the actual value signal
1: D component in the fault signal

p2264[0...n] CI: Technology controller actual value / Tec_ctrl act val

SERVO_S110-DP (Tech_ctrl), SERVO_S110-CAN (Tech_ctrl), SERVO_S110-PN (Tech_ctrl)

Can be changed: U, T	**Calculated:** -	**Access level:** 2
Data type: Unsigned32 / FloatingPoint32	**Dyn. index:** CDS, p0170	**Func. diagram:** 7958
P-Group: Technology	**Unit group:** -	**Unit selection:** -
Not for motor type: -	**Scaling:** PERCENT	**Expert list:** 1
Min	**Max**	**Factory setting**
-	-	0

Description: Sets the signal source for the actual value of the technology controller.

p2265 Technology controller actual value filter time constant / Tec_ctrl act T

SERVO_S110-DP (Tech_ctrl), SERVO_S110-CAN (Tech_ctrl), SERVO_S110-PN (Tech_ctrl)

Can be changed: U, T	**Calculated:** -	**Access level:** 2
Data type: FloatingPoint32	**Dyn. index:** -	**Func. diagram:** 7958
P-Group: Technology	**Unit group:** -	**Unit selection:** -
Not for motor type: -	**Scaling:** -	**Expert list:** 1
Min	**Max**	**Factory setting**
0.000 [s]	60.000 [s]	0.000 [s]

Description: Sets the time constant for the actual value filter (PT1) of the technology controller.

r2266 CO: Technology controller actual value after filter / Tec_ctr act aftFlt

SERVO_S110-DP (Tech_ctrl), SERVO_S110-CAN (Tech_ctrl), SERVO_S110-PN (Tech_ctrl)

Can be changed: -	**Calculated:** -	**Access level:** 2
Data type: FloatingPoint32	**Dyn. index:** -	**Func. diagram:** 7958
P-Group: Technology	**Unit group:** 9_1	**Unit selection:** p0595
Not for motor type: -	**Scaling:** PERCENT	**Expert list:** 1
Min	**Max**	**Factory setting**
- [%]	- [%]	- [%]

Description: Displays the smoothed actual value after the filter (PT1) of the technology controller

p2267 Technology controller upper limit actual value / Tec_ctrl u_lim act

SERVO_S110-DP (Tech_ctrl), SERVO_S110-CAN (Tech_ctrl), SERVO_S110-PN (Tech_ctrl)

Can be changed: U, T	**Calculated:** -	**Access level:** 3
Data type: FloatingPoint32	**Dyn. index:** -	**Func. diagram:** 7958
P-Group: Technology	**Unit group:** 9_1	**Unit selection:** p0595
Not for motor type: -	**Scaling:** PERCENT	**Expert list:** 1
Min	**Max**	**Factory setting**
-200.00 [%]	200.00 [%]	200.00 [%]

Description: Sets the upper limit for the actual value signal of the technology controller.
Dependency: Refer to: p2264, p2265, p2271
Refer to: F07426
Notice: If the actual value exceeds this upper limit, this results in fault F07426.
Note: Limiting only active for p2252 bit 3 = 1.

p2268 Technology controller lower limit actual value / Tec_ctrl l_lim act

SERVO_S110-DP (Tech_ctrl), SERVO_S110-CAN (Tech_ctrl), SERVO_S110-PN (Tech_ctrl)

Can be changed: U, T	**Calculated:** -	**Access level:** 3
Data type: FloatingPoint32	**Dyn. index:** -	**Func. diagram:** 7958
P-Group: Technology	**Unit group:** 9_1	**Unit selection:** p0595
Not for motor type: -	**Scaling:** PERCENT	**Expert list:** 1
Min	**Max**	**Factory setting**
-200.00 [%]	200.00 [%]	-200.00 [%]

Description: Sets the lower limit for the actual value signal of the technology controller.
Dependency: Refer to: p2264, p2265, p2271
Refer to: F07426
Notice: If the actual value falls below this lower limit, this results in fault F07426.

Note: Limiting only active for p2252 bit 3 = 1.

p2269 Technology controller gain actual value / Tech_ctrl gain act

SERVO_S110-DP (Tech_ctrl), SERVO_S110-CAN (Tech_ctrl), SERVO_S110-PN (Tech_ctrl)

Can be changed: U, T	**Calculated:** -	**Access level:** 3
Data type: FloatingPoint32	**Dyn. index:** -	**Func. diagram:** 7958
P-Group: Technology	**Unit group:** -	**Unit selection:** -
Not for motor type: -	**Scaling:** -	**Expert list:** 1
Min	**Max**	**Factory setting**
0.00 [%]	500.00 [%]	100.00 [%]

Description: Scaling factor for the actual value of the technology controller.

Dependency: Refer to: p2264, p2265, p2267, p2268, p2271

Note: For 100%, the actual value is not changed.

p2270 Technology controller actual value function / Tec_ctr ActVal fct

SERVO_S110-DP (Tech_ctrl), SERVO_S110-CAN (Tech_ctrl), SERVO_S110-PN (Tech_ctrl)

Can be changed: U, T	**Calculated:** -	**Access level:** 3
Data type: Integer16	**Dyn. index:** -	**Func. diagram:** 7958
P-Group: Technology	**Unit group:** -	**Unit selection:** -
Not for motor type: -	**Scaling:** -	**Expert list:** 1
Min	**Max**	**Factory setting**
0	3	0

Description: Setting to use an arithmetic function for the actual value signal of the technology controller.

Value:
0: No function
1: Root function (root from x)
2: Square function (x * x)
3: Cube function (x * x * x)

Dependency: Refer to: p2264, p2265, p2267, p2268, p2269, p2271

p2271 Technology controller actual value inversion (sensor type) / Tech_ctrl act inv

SERVO_S110-DP (Tech_ctrl), SERVO_S110-CAN (Tech_ctrl), SERVO_S110-PN (Tech_ctrl)

Can be changed: T	**Calculated:** -	**Access level:** 3
Data type: Integer16	**Dyn. index:** -	**Func. diagram:** -
P-Group: Technology	**Unit group:** -	**Unit selection:** -
Not for motor type: -	**Scaling:** -	**Expert list:** 1
Min	**Max**	**Factory setting**
0	1	0

Description: Setting to invert the actual value signal of the technology controller.
The inversion depends on the sensor type for the actual value signal.

Value:
0: No inversion
1: Inversion actual value signal

Caution:

If the actual value inversion is incorrectly selected, then the closed-loop control with the technology controller can become unstable and can oscillate!

Note: The correct setting can be determined as follows:
- inhibit the technology controller (p2200 = 0).
- increase the motor speed and in so doing, measure the actual value signal of the technology controller.
--> If the actual value increases as the motor speed increases, then p2271 should be set to 0 (no inversion).
--> If the actual value decreases as the motor speed increases, then p2271 should be set to 1 (the actual value signal is inverted).

r2272 CO: Technology controller actual value scaled / Tech_ctrl act scal

SERVO_S110-DP (Tech_ctrl), SERVO_S110-CAN (Tech_ctrl), SERVO_S110-PN (Tech_ctrl)

Can be changed: -	**Calculated:** -	**Access level:** 2
Data type: FloatingPoint32	**Dyn. index:** -	**Func. diagram:** 7958
P-Group: Technology	**Unit group:** 9_1	**Unit selection:** p0595
Not for motor type: -	**Scaling:** PERCENT	**Expert list:** 1
Min	**Max**	**Factory setting**
- [%]	- [%]	- [%]

Description: Displays the scaled actual value signal of the technology controller.
Dependency: Refer to: p2264, p2265, r2266, p2267, p2268, p2269, p2270, p2271

r2273 CO: Technology controller error / Tec_ctrl error

SERVO_S110-DP (Tech_ctrl), SERVO_S110-CAN (Tech_ctrl), SERVO_S110-PN (Tech_ctrl)

Can be changed: -	**Calculated:** -	**Access level:** 2
Data type: FloatingPoint32	**Dyn. index:** -	**Func. diagram:** 7958
P-Group: Technology	**Unit group:** 9_1	**Unit selection:** p0595
Not for motor type: -	**Scaling:** PERCENT	**Expert list:** 1
Min	**Max**	**Factory setting**
- [%]	- [%]	- [%]

Description: Displays the error (system deviation) between the setpoint and actual value of the technology controller.
Dependency: Refer to: p2263

p2274 Technology controller differentiation time constant / Tec_ctrl D comp T

SERVO_S110-DP (Tech_ctrl), SERVO_S110-CAN (Tech_ctrl), SERVO_S110-PN (Tech_ctrl)

Can be changed: U, T	**Calculated:** -	**Access level:** 2
Data type: FloatingPoint32	**Dyn. index:** -	**Func. diagram:** 7958
P-Group: Technology	**Unit group:** -	**Unit selection:** -
Not for motor type: -	**Scaling:** -	**Expert list:** 1
Min	**Max**	**Factory setting**
0.000 [s]	60.000 [s]	0.000 [s]

Description: Sets the time constant for the differentiation (D component) of the technology controller.
Note: p2274 = 0: Differentiation is disabled.

p2280 Technology controller proportional gain / Tec_ctrl Kp

SERVO_S110-DP (Tech_ctrl), SERVO_S110-CAN (Tech_ctrl), SERVO_S110-PN (Tech_ctrl)

Can be changed: U, T	**Calculated:** -	**Access level:** 2
Data type: FloatingPoint32	**Dyn. index:** -	**Func. diagram:** 7958
P-Group: Technology	**Unit group:** -	**Unit selection:** -
Not for motor type: -	**Scaling:** -	**Expert list:** 1
Min	**Max**	**Factory setting**
0.000	1000.000	1.000

Description: Sets the proportional gain (P component) of the technology controller.
Dependency: Refer to: p2252
Note: p2280 = 0: The proportional gain is disabled.

p2285 Technology controller integral time / Tec_ctrl Tn

SERVO_S110-DP (Tech_ctrl), SERVO_S110-CAN (Tech_ctrl), SERVO_S110-PN (Tech_ctrl)

Can be changed: U, T	**Calculated:** -	**Access level:** 2
Data type: FloatingPoint32	**Dyn. index:** -	**Func. diagram:** 7958
P-Group: Technology	**Unit group:** -	**Unit selection:** -
Not for motor type: -	**Scaling:** -	**Expert list:** 1
Min	**Max**	**Factory setting**
0.000 [s]	60.000 [s]	0.000 [s]

Description: Sets the integral time (I component, integrating time constant) of the technology controller.
Dependency: Refer to: p2252
Note: p2285 = 0: The integral time is disabled.

p2286[0...n] BI: Hold technology controller integrator / Tec_ctr integ stop

SERVO_S110-DP (Tech_ctrl), SERVO_S110-CAN (Tech_ctrl), SERVO_S110-PN (Tech_ctrl)

Can be changed: T	**Calculated:** -	**Access level:** 3
Data type: Unsigned32 / Binary	**Dyn. index:** CDS, p0170	**Func. diagram:** 7958
P-Group: Technology	**Unit group:** -	**Unit selection:** -
Not for motor type: -	**Scaling:** -	**Expert list:** 1
Min	**Max**	**Factory setting**
-	-	0

Description: Sets the signal source to hold the integrator for the technology controller.

p2289[0...n] CI: Technology controller pre-control signal / Tec_ctrl prectrl

SERVO_S110-DP (Tech_ctrl), SERVO_S110-CAN (Tech_ctrl), SERVO_S110-PN (Tech_ctrl)

Can be changed: U, T	**Calculated:** -	**Access level:** 2
Data type: Unsigned32 / FloatingPoint32	**Dyn. index:** CDS, p0170	**Func. diagram:** 7958
P-Group: Technology	**Unit group:** -	**Unit selection:** -
Not for motor type: -	**Scaling:** PERCENT	**Expert list:** 1
Min	**Max**	**Factory setting**
-	-	0

Description: Sets the signal source for the pre-control signal of the technology controller.

p2291 CO: Technology controller maximum limiting / Tec_ctrl max_lim

SERVO_S110-DP (Tech_ctrl), SERVO_S110-CAN (Tech_ctrl), SERVO_S110-PN (Tech_ctrl)

Can be changed: U, T	**Calculated:** -	**Access level:** 2
Data type: FloatingPoint32	**Dyn. index:** -	**Func. diagram:** 7958
P-Group: Technology	**Unit group:** -	**Unit selection:** -
Not for motor type: -	**Scaling:** PERCENT	**Expert list:** 1
Min	**Max**	**Factory setting**
-200.00 [%]	200.00 [%]	100.00 [%]

Description: Sets the maximum limit of the technology controller.

Dependency: Refer to: p2292

Caution: The maximum limit must always be greater than the minimum limit (p2291 > p2292).

p2292 CO: Technology controller minimum limiting / Tec_ctrl min_lim

SERVO_S110-DP (Tech_ctrl), SERVO_S110-CAN (Tech_ctrl), SERVO_S110-PN (Tech_ctrl)

Can be changed: U, T	**Calculated:** -	**Access level:** 2
Data type: FloatingPoint32	**Dyn. index:** -	**Func. diagram:** 7958
P-Group: Technology	**Unit group:** -	**Unit selection:** -
Not for motor type: -	**Scaling:** PERCENT	**Expert list:** 1
Min	**Max**	**Factory setting**
-200.00 [%]	200.00 [%]	0.00 [%]

Description: Sets the minimum limit of the technology controller.

Dependency: Refer to: p2291

Caution: The maximum limit must always be greater than the minimum limit (p2291 > p2292).

p2293 Technology controller ramp-up/ramp-down time / Tec_ctr ramp up/dn

SERVO_S110-DP (Tech_ctrl), SERVO_S110-CAN (Tech_ctrl), SERVO_S110-PN (Tech_ctrl)

Can be changed: U, T	**Calculated:** -	**Access level:** 3
Data type: FloatingPoint32	**Dyn. index:** -	**Func. diagram:** 7958
P-Group: Technology	**Unit group:** -	**Unit selection:** -
Not for motor type: -	**Scaling:** -	**Expert list:** 1
Min	**Max**	**Factory setting**
0.00 [s]	100.00 [s]	1.00 [s]

Description: Sets the ramping time for the output signal of the technology controller.

Dependency: Refer to: p2291, p2292

Note: The time refers to the set maximum and minimum limits (p2291, p2292).

r2294 CO: Technology controller output signal / Tec_ctrl outp_sig

SERVO_S110-DP (Tech_ctrl), SERVO_S110-CAN (Tech_ctrl), SERVO_S110-PN (Tech_ctrl)

Can be changed: -	**Calculated:** -	**Access level:** 2
Data type: FloatingPoint32	**Dyn. index:** -	**Func. diagram:** 7958
P-Group: Technology	**Unit group:** -	**Unit selection:** -
Not for motor type: -	**Scaling:** PERCENT	**Expert list:** 1
Min	**Max**	**Factory setting**
- [%]	- [%]	- [%]

Description: Displays the output signal of the technology controller.
Dependency: Refer to: p2295

p2295 CO: Technology controller output scaling / Tec_ctrl outp scal

SERVO_S110-DP (Tech_ctrl), SERVO_S110-CAN (Tech_ctrl), SERVO_S110-PN (Tech_ctrl)

Can be changed: U, T	**Calculated:** -	**Access level:** 3
Data type: FloatingPoint32	**Dyn. index:** -	**Func. diagram:** 7958
P-Group: Technology	**Unit group:** -	**Unit selection:** -
Not for motor type: -	**Scaling:** PERCENT	**Expert list:** 1
Min	**Max**	**Factory setting**
-100.00 [%]	100.00 [%]	100.00 [%]

Description: Sets the scaling for the output signal of the technology controller.

p2296[0...n] CI: Technology controller output scaling / Tec_ctrl outp scal

SERVO_S110-DP (Tech_ctrl), SERVO_S110-CAN (Tech_ctrl), SERVO_S110-PN (Tech_ctrl)

Can be changed: U, T	**Calculated:** -	**Access level:** 2
Data type: Unsigned32 / FloatingPoint32	**Dyn. index:** CDS, p0170	**Func. diagram:** 7958
P-Group: Technology	**Unit group:** -	**Unit selection:** -
Not for motor type: -	**Scaling:** PERCENT	**Expert list:** 1
Min	**Max**	**Factory setting**
-	-	2295[0]

Description: Sets the signal source for the scaling value of the technology controller.
Dependency: Refer to: p2295

p2297[0...n] CI: Technology controller maximum limit signal source / Tec_ctrMaxLimS_src

SERVO_S110-DP (Tech_ctrl), SERVO_S110-CAN (Tech_ctrl), SERVO_S110-PN (Tech_ctrl)

Can be changed: U, T	**Calculated:** -	**Access level:** 2
Data type: Unsigned32 / FloatingPoint32	**Dyn. index:** CDS, p0170	**Func. diagram:** 7958
P-Group: Technology	**Unit group:** -	**Unit selection:** -
Not for motor type: -	**Scaling:** PERCENT	**Expert list:** 1
Min	**Max**	**Factory setting**
-	-	2291[0]

Description: Sets the signal source for the maximum limiting of the technology controller.
Dependency: Refer to: p2291

p2298[0...n] CI: Technology controller minimum limit signal source / Tec_ctrl min_l s_s

SERVO_S110-DP (Tech_ctrl), SERVO_S110-CAN (Tech_ctrl), SERVO_S110-PN (Tech_ctrl)

Can be changed: U, T	**Calculated:** -	**Access level:** 2
Data type: Unsigned32 / FloatingPoint32	**Dyn. index:** CDS, p0170	**Func. diagram:** 7958
P-Group: Technology	**Unit group:** -	**Unit selection:** -
Not for motor type: -	**Scaling:** PERCENT	**Expert list:** 1
Min	**Max**	**Factory setting**
-	-	2292[0]

Description: Sets the signal source for the minimum limiting of the technology controller.
Dependency: Refer to: p2292

p2299[0...n] CI: Technology controller limit offset / Tech_ctrl lim offs

SERVO_S110-DP (Tech_ctrl), SERVO_S110-CAN (Tech_ctrl), SERVO_S110-PN (Tech_ctrl)

Can be changed: U, T	**Calculated:** -	**Access level:** 2
Data type: Unsigned32 / FloatingPoint32	**Dyn. index:** CDS, p0170	**Func. diagram:** 7958
P-Group: Technology	**Unit group:** -	**Unit selection:** -
Not for motor type: -	**Scaling:** PERCENT	**Expert list:** 1
Min	**Max**	**Factory setting**
-	-	0

Description: Sets the signal source for the offset of the output limiting of the technology controller.

p2306 Technology controller fault signal inversion / Tec_ctrl fault inv

SERVO_S110-DP (Tech_ctrl), SERVO_S110-CAN (Tech_ctrl), SERVO_S110-PN (Tech_ctrl)

Can be changed: T	**Calculated:** -	**Access level:** 3
Data type: Integer16	**Dyn. index:** -	**Func. diagram:** -
P-Group: Technology	**Unit group:** -	**Unit selection:** -
Not for motor type: -	**Scaling:** -	**Expert list:** 1
Min	**Max**	**Factory setting**
0	1	0

Description: Setting to invert the fault signal of the technology controller.
The setting depends on the type of control loop.

Value:
0: No inversion
1: Inversion

Caution:
If the actual value inversion is incorrectly selected, then the closed-loop control with the technology controller can become unstable and can oscillate!

Note:
The correct setting can be determined as follows:
- inhibit the technology controller (p2200 = 0).
- increase the motor speed and in so doing, measure the actual value signal (of the technology controller).
- if the actual value increases with increasing motor speed, then the inversion should be switched out.
- if the actual value decreases with increasing motor speed, then the inversion should be set.

If value = 0:
The drive reduces the output speed when the actual value rises (e.g. for heating fans, intake pump, compressor).
If value = 1:
The drive increases the output speed when the actual value increases (e.g. for cooling fans, discharge pumps).

r2349.0...11 CO/BO: Technology controller status word / Tec_ctrl status

SERVO_S110-DP (Tech_ctrl), SERVO_S110-CAN (Tech_ctrl), SERVO_S110-PN (Tech_ctrl)

Can be changed: -	**Calculated:** -	**Access level:** 3
Data type: Unsigned32	**Dyn. index:** -	**Func. diagram:** 7958
P-Group: Technology	**Unit group:** -	**Unit selection:** -
Not for motor type: -	**Scaling:** -	**Expert list:** 1
Min	**Max**	**Factory setting**
-	-	-

Description: Displays the status word of the technology controller.

Bit field:

Bit	Signal name	1 signal	0 signal	FP
00	Technology controller de-activated	Yes	No	-
01	Technology controller limited	Yes	No	-
02	Technology controller motorized potentiometer limited max	Yes	No	-
03	Technology controller motorized potentiometer limited min	Yes	No	-
08	Technology controller actual value at the minimum	Yes	No	-
09	Technology controller actual value at the maximum	Yes	No	-

10	Technology controller output at the minimum	Yes	No	-
11	Technology controller output at the maximum	Yes	No	-

p2502[0...n] LR encoder assignment / Encoder assignment

SERVO_S110-DP (Cl-loop pos ctrl), SERVO_S110-CAN (Cl-loop pos ctrl), SERVO_S110-PN (Cl-loop pos ctrl)

Can be changed: C2(25) | **Calculated:** - | **Access level:** 1
Data type: Integer16 | **Dyn. index:** DDS, p0180 | **Func. diagram:** 4010
P-Group: Closed loop position control | **Unit group:** - | **Unit selection:** -
Not for motor type: - | **Scaling:** - | **Expert list:** 1

Min	Max	Factory setting
0	2	1

Description: Sets the assigned encoder.
The actual value preprocessing and the closed-loop position control are carried out using the assigned encoder.

Value:
0: No encoder
1: Encoder 1
2: Encoder 2

Dependency: Refer to: p0187, p0188

Notice: For the setting p2502 = 0 (no encoder), closed-loop position control is not possible. This setting is only practical as supportive measure to implement encoderless closed-loop speed control (e.g. if the motor encoder is defective).

Note: The assigned encoder (p2502 = 1, 2) must be allocated an encoder data set (p0187, p0188).

p2503[0...n] LR length unit LU per 10 mm / LU per 10 mm

SERVO_S110-DP (Cl-loop pos ctrl), SERVO_S110-CAN (Cl-loop pos ctrl), SERVO_S110-PN (Cl-loop pos ctrl)

Can be changed: C2(25) | **Calculated:** - | **Access level:** 1
Data type: Unsigned32 | **Dyn. index:** DDS, p0180 | **Func. diagram:** 4010
P-Group: Closed loop position control | **Unit group:** - | **Unit selection:** -
Not for motor type: - | **Scaling:** - | **Expert list:** 1

Min	Max	Factory setting
1 [LU]	2147483647 [LU]	10000 [LU]

Description: Sets the neutral length units LU per 10 mm.
Therefore, for a linear scale, a reference is established between the physical arrangement and the neutral length units LU used in the drive.
Example:
Linear scale, 10 mm should be broken down to units of µm (i.e. 1 LU = 1 µm).
--> p2503 = 10000

Note: The assignment to the grid spacing can be achieved using this for a rotary axis with linear encoder.

p2504[0...n] LR motor/load motor revolutions / Mot/load motor rev

SERVO_S110-DP (Cl-loop pos ctrl), SERVO_S110-CAN (Cl-loop pos ctrl), SERVO_S110-PN (Cl-loop pos ctrl)

Can be changed: C2(25) | **Calculated:** - | **Access level:** 1
Data type: Unsigned32 | **Dyn. index:** DDS, p0180 | **Func. diagram:** 4010, 4704, 4711
P-Group: Closed loop position control | **Unit group:** - | **Unit selection:** -
Not for motor type: - | **Scaling:** - | **Expert list:** 1

Min	Max	Factory setting
1	1048576	1

Description: Sets the motor revolutions for the gearbox factor between the motor shaft and load shaft.
Gearbox factor = motor revolutions (p2504) / load revolutions (p2505)

Dependency: Refer to: p0432, p0433, p2505

Note: The gearbox factor between the encoder shaft and the motor shaft is set using p0432 and p0433.

p2505[0...n] LR motor/load load revolutions / Mot/load load rev

SERVO_S110-DP (Cl-loop pos ctrl), SERVO_S110-CAN (Cl-loop pos ctrl), SERVO_S110-PN (Cl-loop pos ctrl)

Can be changed: C2(25)	**Calculated:** -	**Access level:** 1
Data type: Integer32	**Dyn. index:** DDS, p0180	**Func. diagram:** 4010, 4704, 4711
P-Group: Closed loop position control	**Unit group:** -	**Unit selection:** -
Not for motor type: -	**Scaling:** -	**Expert list:** 1
Min	**Max**	**Factory setting**
-1048576	1048576	1

Description: Sets the load revolutions for the gearbox factor between the motor shaft and load shaft.
Gearbox factor = motor revolutions (p2504) / load revolutions (p2505)

Dependency: Refer to: p0432, p0433, p2504

Note: The gearbox factor between the encoder shaft and the motor shaft is set using p0432 and p0433.

p2506[0...n] LR length unit LU per load revolution / LU per load rev

SERVO_S110-DP (Cl-loop pos ctrl), SERVO_S110-CAN (Cl-loop pos ctrl), SERVO_S110-PN (Cl-loop pos ctrl)

Can be changed: C2(25)	**Calculated:** -	**Access level:** 1
Data type: Unsigned32	**Dyn. index:** DDS, p0180	**Func. diagram:** 4010
P-Group: Closed loop position control	**Unit group:** -	**Unit selection:** -
Not for motor type: -	**Scaling:** -	**Expert list:** 1
Min	**Max**	**Factory setting**
1 [LU]	2147483647 [LU]	10000 [LU]

Description: Sets the neutral length units LU per load revolution.
Therefore, for a rotary encoder, a reference is established between the physical arrangement and the neutral length units LU used in the drive.
Example:
Rotary encoder, ballscrew with 10 mm/revolution, 10 mm should be broken down to units of µm (i.e. 1 LU = 1 µm).
--> One load revolution corresponds to 10000 LU
--> p2506 = 10000

Note: The position controller can only process position setpoints in the interpolator clock cycle (IPO clock cycle) in integer length units (LU, Length Unit). This is the reason that speed setpoints that are not a multiple integer of 1 LU per IPO clock cycle can only be realized as an average. The result speed setpoint steps are especially noticeable for a high loop gain or when the pre-control is active. Increasing p2506 counteracts this behavior.

p2507[0...n] LR absolute encoder adjustment status / Abs_enc_adj stat

SERVO_S110-DP (Cl-loop pos ctrl), SERVO_S110-CAN (Cl-loop pos ctrl), SERVO_S110-PN (Cl-loop pos ctrl)

Can be changed: U, T	**Calculated:** -	**Access level:** 1
Data type: Integer16	**Dyn. index:** EDS, p0140	**Func. diagram:** 4010
P-Group: Closed loop position control	**Unit group:** -	**Unit selection:** -
Not for motor type: -	**Scaling:** -	**Expert list:** 1
Min	**Max**	**Factory setting**
0	3	1

Description: Activating the adjustment and display of the status of the adjustment for absolute encoders.

Value:
0: Error occurred while adjusting
1: Absolute encoder not adjusted
2: Absolute encoder not adjusted and encoder adjustment initiated
3: Absolute encoder adjusted

Dependency: Refer to: p2525, p2598, p2599

Caution:

For rotating absolute encoders, when adjusting, a range is set up symmetrically around zero with half of the encoder range, within which the position must be re-established after powering down/powering up. In this range, it is only permissible that the encoder overflows.

After the adjustment has been completed, it must be guaranteed that the range is not exited. The reason for this is that outside the range, there is no clear reference any longer between the encoder actual value and mechanical system.

If the reference point (CI: p2598) lies in this range, then the position actual value is set when adjusting to the reference point. Otherwise, adjustment is canceled with F07443.

There is no overflow for linear absolute encoders. This means that after the adjustment, the position can be re-established in the complete traversing range after powering down/powering up. When adjusting, the position actual value is set to the reference point.

Note:

The encoder adjustment is initiated with p2507 = 2. The status is displayed using the other values.

In order to permanently save the determined position offset (p2525) it must be saved in a non-volatile fashion (p0971, p0977).

This adjustment can only be initiated for an absolute encoder.

p2508[0...3] BI: LR activate reference mark search / Ref_mark act

SERVO_S110-DP (CI-loop pos ctrl), SERVO_S110-CAN (CI-loop pos ctrl), SERVO_S110-PN (CI-loop pos ctrl)

Can be changed: T	**Calculated:** -	**Access level:** 1
Data type: Unsigned32 / Binary	**Dyn. index:** -	**Func. diagram:** 4010
P-Group: Closed loop position control	**Unit group:** -	**Unit selection:** -
Not for motor type: -	**Scaling:** -	**Expert list:** 1
Min	**Max**	**Factory setting**
-	-	0

Description: Sets the signal source for the function "activate reference mark search".

Index:
[0] = Closed-loop position control
[1] = Encoder 1
[2] = Encoder 2
[3] = Reserved

Dependency: Refer to: p0490, p0495, p2502, p2509, r2684

Refer to: A07495

Notice: When activating the function "set position actual value" while the function "reference mark search" is activated, then the function "reference mark search" is automatically de-activated.

Note: When the function module "basic positioner" (r0108.4 = 1) is activated, the following BICO interconnection is established: BI: p2508[0] = r2684.0

The function can only be activated using a 0/1 signal if no reference function is active (r2526.2).

If "reference mark search" and "measuring probe evaluation" are simultaneously activated, then no function is activated and the actual function is interrupted.

p2509[0...3] BI: LR activate measuring probe evaluation / MT_eval act

SERVO_S110-DP (CI-loop pos ctrl), SERVO_S110-CAN (CI-loop pos ctrl), SERVO_S110-PN (CI-loop pos ctrl)

Can be changed: T	**Calculated:** -	**Access level:** 1
Data type: Unsigned32 / Binary	**Dyn. index:** -	**Func. diagram:** 4010
P-Group: Closed loop position control	**Unit group:** -	**Unit selection:** -
Not for motor type: -	**Scaling:** -	**Expert list:** 1
Min	**Max**	**Factory setting**
-	-	0

Description: Sets the signal source for the function "activate measuring probe evaluation".

0/1 signal: The function "activate measuring probe evaluation" is started.

Index:
[0] = Closed-loop position control
[1] = Encoder 1
[2] = Encoder 2
[3] = Reserved

Dependency: Refer to: p0488, p0489, p0490, p2502, p2508, p2510, p2511, p2517, p2518

Refer to: A07495

Notice: When the "set position actual value" is activated while the function "measuring probe evaluation" is activated, then the function "measuring probe evaluation" is automatically de-activated.

Note: When the function module "basic positioner" (r0108.4 = 1) is activated, the following BICO interconnection is established: BI: p2509[0] = r2684.1
The function can only be activated using a 0/1 signal if no reference function is active (r2526.2).
If "reference mark search" and "measuring probe evaluation" are simultaneously activated, then no function is activated and the actual function is interrupted.

p2510[0...3] BI: LR selecting measuring probe evaluation / MT_eval select

SERVO_S110-DP (Cl-loop pos ctrl), SERVO_S110-CAN (Cl-loop pos ctrl), SERVO_S110-PN (Cl-loop pos ctrl)

Can be changed: T	**Calculated:** -	**Access level:** 1
Data type: Unsigned32 / Binary	**Dyn. index:** -	**Func. diagram:** 3615, 4010
P-Group: Closed loop position control	**Unit group:** -	**Unit selection:** -
Not for motor type: -	**Scaling:** -	**Expert list:** 1
Min	**Max**	**Factory setting**
-	-	0

Description: Sets the signal source to select the measuring probe.
1 signal = measuring probe 2 is activated for BI: p2509 = 0/1 edge.
0 signal = measuring probe 1 is activated for BI: p2509 = 0/1 edge.

Index: [0] = Closed-loop position control
[1] = Encoder 1
[2] = Encoder 2
[3] = Reserved

Dependency: Refer to: p2502, p2509, p2511

Note: When the function module "basic positioner" (r0108.4 = 1) is activated, the following BICO interconnection is established: BI: p2509[0] = r2684.1
The measuring probe is selected at the 0/1 signal transition at r2684.1 (flying referencing active).

p2511[0...3] BI: LR measuring probe evaluation edge / MT_eval edge

SERVO_S110-DP (Cl-loop pos ctrl), SERVO_S110-CAN (Cl-loop pos ctrl), SERVO_S110-PN (Cl-loop pos ctrl)

Can be changed: T	**Calculated:** -	**Access level:** 1
Data type: Unsigned32 / Binary	**Dyn. index:** -	**Func. diagram:** 3615, 4010
P-Group: Closed loop position control	**Unit group:** -	**Unit selection:** -
Not for motor type: -	**Scaling:** -	**Expert list:** 1
Min	**Max**	**Factory setting**
-	-	0

Description: Sets the signal source for the edge evaluation of the measuring probe.
1 signal = falling edge of the measuring probe (p2510) is activated for BI: p2509 = 0/1 edge.
0 signal = rising edge of the measuring probe (p2510) is activated for BI: p2509 = 0/1 edge.

Index: [0] = Closed-loop position control
[1] = Encoder 1
[2] = Encoder 2
[3] = Encoder 3

Dependency: Refer to: p2502, p2509, p2510

p2512[0...3] BI: LR pos. actual value preprocessing activate corr. value (edge) / ActVal_prepCorrAct

SERVO_S110-DP (Cl-loop pos ctrl), SERVO_S110-CAN (Cl-loop pos ctrl), SERVO_S110-PN (Cl-loop pos ctrl)

Can be changed: T	**Calculated:** -	**Access level:** 1
Data type: Unsigned32 / Binary	**Dyn. index:** -	**Func. diagram:** 4010, 4015
P-Group: Closed loop position control	**Unit group:** -	**Unit selection:** -
Not for motor type: -	**Scaling:** -	**Expert list:** 1
Min	**Max**	**Factory setting**
-	-	0

Description: Sets the signal source for the function "activate position actual value preprocessing, corrective value (edge)".
0/1 signal: The corrective value available through CI: p2513 is activated.

Index: [0] = Closed-loop position control
[1] = Encoder 1
[2] = Encoder 2
[3] = Reserved

Dependency: Refer to: p2502, p2513, r2684

Note: When the function module "basic positioner" (r0108.4 = 1) is activated, the following BICO interconnection is established: BI: p2512[0] = r2684.7

p2513[0...3] CI: LR Position actual value preprocessing corrective value / Act val_prep corr

SERVO_S110-DP (CI-loop pos ctrl), SERVO_S110-CAN (CI-loop pos ctrl), SERVO_S110-PN (CI-loop pos ctrl)

Can be changed: T	**Calculated:** -	**Access level:** 1
Data type: Unsigned32 / Integer32	**Dyn. index:** -	**Func. diagram:** 4010, 4015
P-Group: Closed loop position control	**Unit group:** -	**Unit selection:** -
Not for motor type: -	**Scaling:** -	**Expert list:** 1
Min	**Max**	**Factory setting**
-	-	0

Description: Sets the signal source for the corrective value for position actual value preprocessing.

Index: [0] = Closed-loop position control
[1] = Encoder 1
[2] = Encoder 2
[3] = Reserved

Dependency: Refer to: p2502, p2512, r2521, r2685

Note: When the function module "basic positioner" (r0108.4 = 1) is activated, the following BICO interconnection is established: CI: p2513[0] = r2685

For BI: p2512[0] = 0/1 signal, the position actual value (CO: r2521[0]) is corrected corresponding to the value via CI: p2513[0]. In so doing, the sign of the corrective value present is taken into account.

p2514[0...3] BI: LR activate position actual value setting / s_act setting act

SERVO_S110-DP (CI-loop pos ctrl), SERVO_S110-CAN (CI-loop pos ctrl), SERVO_S110-PN (CI-loop pos ctrl)

Can be changed: T	**Calculated:** -	**Access level:** 1
Data type: Unsigned32 / Binary	**Dyn. index:** -	**Func. diagram:** 4010
P-Group: Closed loop position control	**Unit group:** -	**Unit selection:** -
Not for motor type: -	**Scaling:** -	**Expert list:** 1
Min	**Max**	**Factory setting**
-	-	0

Description: Sets the signal source to activate the function "set position actual value".

Index: [0] = Closed-loop position control
[1] = Encoder 1
[2] = Encoder 2
[3] = Reserved

Dependency: Refer to: p2502, p2515
Refer to: A07495, A07497

Warning: As long as the position actual value is set, encoder increments that are received are not evaluated. In this state, any position difference cannot be corrected!

Notice: When the function "set position actual value" is activated while the function "reference mark search" or "measuring probe evaluation" is activated, then the corresponding function is de-activated.

Note: BI: p2514 = 1 signal:
The position actual value is set to the setting value in CI: p2515. Alarm A07497 "position setting value activated" is output. Encoder increments that are received in the meantime, are not taken into account.
BI: p2514 = 1/0 signal:
The position actual value preprocessing is activated and is based on the setting value.

p2515[0...3] CI: LR position actual setting setting value / s_act set setVal

SERVO_S110-DP (CI-loop pos ctrl), SERVO_S110-CAN (CI-loop pos ctrl), SERVO_S110-PN (CI-loop pos ctrl)

Can be changed: T	**Calculated:** -	**Access level:** 1
Data type: Unsigned32 / Integer32	**Dyn. index:** -	**Func. diagram:** 4010
P-Group: Closed loop position control	**Unit group:** -	**Unit selection:** -
Not for motor type: -	**Scaling:** -	**Expert list:** 1
Min	**Max**	**Factory setting**
-	-	0

Description: Sets the signal source for the setting value of the function "setting position actual value".

Index: [0] = Closed-loop position control
[1] = Encoder 1
[2] = Encoder 2
[3] = Reserved

Dependency: Refer to: p2502, p2514

p2516[0...3] CI: LR position offset / Position offset

SERVO_S110-DP (CI-loop pos ctrl), SERVO_S110-CAN (CI-loop pos ctrl), SERVO_S110-PN (CI-loop pos ctrl)

Can be changed: T	**Calculated:** -	**Access level:** 1
Data type: Unsigned32 / Integer32	**Dyn. index:** -	**Func. diagram:** 4010
P-Group: Closed loop position control	**Unit group:** -	**Unit selection:** -
Not for motor type: -	**Scaling:** -	**Expert list:** 1
Min	**Max**	**Factory setting**
-	-	0

Description: Sets the signal source for the position offset.

Index: [0] = Closed-loop position control
[1] = Encoder 1
[2] = Encoder 2
[3] = Reserved

Dependency: Refer to: p2502, r2667

Note: When the function module "basic positioner" (r0108.4 = 1) is activated, the following BICO interconnection is established: CI: p2516[0] = r2667

p2517[0...2] LR direct measuring probe 1 / Direct MT 1

SERVO_S110-DP (CI-loop pos ctrl), SERVO_S110-CAN (CI-loop pos ctrl), SERVO_S110-PN (CI-loop pos ctrl)

Can be changed: U, T	**Calculated:** -	**Access level:** 3
Data type: Integer16	**Dyn. index:** -	**Func. diagram:** 4010
P-Group: Closed loop position control	**Unit group:** -	**Unit selection:** -
Not for motor type: -	**Scaling:** -	**Expert list:** 1
Min	**Max**	**Factory setting**
0	17	0

Description: Sets the input terminal for direct measuring probe 1.

The direct measuring probe can either be parameterized as a non-cyclic (value 1 ... 8) or a cyclic (value 11 ... 18) measuring probe.

After it has been activated via BI: p2509 = 0/1 signal, the non-cyclic measuring probe measures once and can be used with EPOS.

After it has been activated via the p2509 = 1 signal, the cyclic measuring probe measures cyclically and cannot be used with EPOS.

In order to process signals faster, the direct measuring probe bypasses the handshake technique via the encoder control word and encoder status word.

Value:
0: No meas probe
1: DI/DO 9 (X132.2)
2: DI/DO 10 (X132.3)
3: DI/DO 11 (X132.4)
7: DI/DO 8 (X132.1)
11: DI/DO 9 cyclic
12: DI/DO 10 cyclic
13: DI/DO 11 cyclic
17: DI/DO 8 cyclic

Index: [0] = Encoder 1
[1] = Encoder 2
[2] = Reserved

Dependency: Refer to: p0490, p0728, p2509, p2510, p2511

Note: DI/DO: Bidirectional Digital Input/Output

The terminal must be set as input (p0728).

If a parameter change is rejected, a check should be performed as to whether the input terminal is already being used in p0488, p0489, p0493, p0494, p0495, p0580 or p0680.

Direct measurement via p2517 has a higher priority than measurements via p0488.

For the direct measuring probe evaluation, the DP clock cycle must be integer multiple of the position controller clock cycle.

p2518[0...2] LR direct measuring probe 2 / Direct MT 2

SERVO_S110-DP (Cl-loop pos ctrl), SERVO_S110-CAN (Cl-loop pos ctrl), SERVO_S110-PN (Cl-loop pos ctrl)

Can be changed: U, T	**Calculated:** -	**Access level:** 3
Data type: Integer16	**Dyn. index:** -	**Func. diagram:** 4010
P-Group: Closed loop position control	**Unit group:** -	**Unit selection:** -
Not for motor type: -	**Scaling:** -	**Expert list:** 1
Min	**Max**	**Factory setting**
0	17	0

Description: Sets the input terminal for direct measuring probe 2.

The direct measuring probe can either be parameterized as a non-cyclic (value 1 ... 6) or a cyclic (value 11 ... 16) measuring probe.

After it has been activated via BI: p2509 = 0/1 signal, the non-cyclic measuring probe measures once and can be used with EPOS.

After it has been activated via the p2509 = 1 signal, the cyclic measuring probe measures cyclically and cannot be used with EPOS.

In order to process signals faster, the direct measuring probe bypasses the handshake technique via the encoder control word and encoder status word.

Value:
0: No meas probe
1: DI/DO 9 (X132.2)
2: DI/DO 10 (X132.3)
3: DI/DO 11 (X132.4)
7: DI/DO 8 (X132.1)
11: DI/DO 9 cyclic
12: DI/DO 10 cyclic
13: DI/DO 11 cyclic
17: DI/DO 8 cyclic

Index:
[0] = Encoder 1
[1] = Encoder 2
[2] = Reserved

Dependency: Refer to: p0490, p0728, p2509, p2510, p2511

Note: DI/DO: Bidirectional Digital Input/Output

The terminal must be set as input (p0728).

If a parameter change is rejected, a check should be performed as to whether the input terminal is already being used in p0488, p0489, p0493, p0494, p0495, p0580 or p0680.

Direct measurement via p2518 has a higher priority than measurements via p0489.

For the direct measuring probe evaluation, the DP clock cycle must be integer multiple of the position controller clock cycle.

p2519[0...n] LR position actual value preprocessing config. DDS changeover / s_act config DDS

SERVO_S110-DP (Cl-loop pos ctrl), SERVO_S110-CAN (Cl-loop pos ctrl), SERVO_S110-PN (Cl-loop pos ctrl)

Can be changed: U, T	**Calculated:** -	**Access level:** 4
Data type: Integer16	**Dyn. index:** DDS, p0180	**Func. diagram:** -
P-Group: Closed loop position control	**Unit group:** -	**Unit selection:** -
Not for motor type: -	**Scaling:** -	**Expert list:** 1
Min	**Max**	**Factory setting**
0	5	1

Description: Sets the behavior of the position actual value preprocessing for the position controller for a DDS changeover.

Re p2519 = 1:

In the following cases, for a DDS changeover, the actual position actual value becomes invalid and the reference point is reset:

- the EDS effective for the closed-loop position control changes.
- the encoder assignment changes (p2502).
- the mechanical relationships change (p2503 ... p2506).
- the direction of rotation changes (p1821).

For absolute encoders, the status of the adjustment (p2507) is also reset if the same absolute encoder remains selected for the closed-loop position control, but the mechanical relationships or the direction of rotation have changed.

In the operation state, in addition, a fault (F07494) is generated.

Notice: The remaining setting values are intended for expanded functionality.

Note: The behavior for a DDS changeover is determined using the value of p2519 in the target data set.

r2520[0...2] CO: LR Position actual value preprocessing encoder control word / ActVal_prep STW

SERVO_S110-DP (CI-loop pos ctrl), SERVO_S110-CAN (CI-loop pos ctrl), SERVO_S110-PN (CI-loop pos ctrl)

Can be changed: -	**Calculated:** -	**Access level:** 1
Data type: Unsigned16	**Dyn. index:** -	**Func. diagram:** 4010
P-Group: Closed loop position control	**Unit group:** -	**Unit selection:** -
Not for motor type: -	**Scaling:** -	**Expert list:** 1
Min	**Max**	**Factory setting**
-	-	-

Description: Displays the encoder control word generated by the position actual value preprocessing.

Index:
[0] = Encoder 1
[1] = Encoder 2
[2] = Reserved

Bit field:

Bit	Signal name	1 signal	0 signal	FP
00	Request function 1	Yes	No	-
01	Request function 2	Yes	No	-
02	Request function 3	Yes	No	-
03	Request function 4	Yes	No	-
04	Request command bit 0	Yes	No	-
05	Request command bit 1	Yes	No	-
06	Request command bit 2	Yes	No	-
07	Flying measurement mode/search for reference mark	Flying measurement	Reference marks	-
13	Request absolute value cyclic	Yes	No	-
14	Request parking encoder	Yes	No	-
15	Request acknowledge encoder fault	Yes	No	-

Dependency: Refer to: p0480

Note: When the function module "basic positioner" (r0108.4 = 1) is activated, the following BICO interconnection is established:
CI: p0480[0] = r2520[0], CI: p0480[1] = r2520[1] and CI: p0480[2] = r2520[2]

r2521[0...3] CO: LR position actual value / s_act

SERVO_S110-DP (CI-loop pos ctrl), SERVO_S110-CAN (CI-loop pos ctrl), SERVO_S110-PN (CI-loop pos ctrl)

Can be changed: -	**Calculated:** -	**Access level:** 1
Data type: Integer32	**Dyn. index:** -	**Func. diagram:** 4010
P-Group: Closed loop position control	**Unit group:** -	**Unit selection:** -
Not for motor type: -	**Scaling:** -	**Expert list:** 1
Min	**Max**	**Factory setting**
- [LU]	- [LU]	- [LU]

Description: Displays the actual position actual value determined by the position actual value preprocessing.

Index:
[0] = Closed-loop position control
[1] = Encoder 1
[2] = Encoder 2
[3] = Reserved

Dependency: Refer to: p2502, r2526

Note: r2526.0 = 1 --> The position actual value in r2521[0] for the position control is valid.
r2527.0 = 1 --> The position actual value in r2521[1] for encoder 1 is valid.
r2528.0 = 1 --> The position actual value in r2521[2] for encoder 2 is valid.

r2522[0...3] CO: LR velocity actual value / v_act

SERVO_S110-DP (Cl-loop pos ctrl), SERVO_S110-CAN (Cl-loop pos ctrl), SERVO_S110-PN (Cl-loop pos ctrl)

Can be changed: -	**Calculated:** -	**Access level:** 1
Data type: Integer32	**Dyn. index:** -	**Func. diagram:** 4010
P-Group: Closed loop position control	**Unit group:** -	**Unit selection:** -
Not for motor type: -	**Scaling:** -	**Expert list:** 1
Min	**Max**	**Factory setting**
- [1000 LU/min]	- [1000 LU/min]	- [1000 LU/min]

Description: Displays the velocity actual value determined by the position actual value preprocessing.

Index: [0] = Closed-loop position control
[1] = Encoder 1
[2] = Encoder 2
[3] = Reserved

Dependency: Refer to: p2502, r2526

Note: r2526.0 = 1 --> The velocity actual value in r2522[0] for the position control is valid.
r2527.0 = 1 --> The velocity actual value in r2522[1] for encoder 1 is valid.
r2528.0 = 1 --> The velocity actual value in r2522[2] for encoder 2 is valid.

r2523[0...3] CO: LR measured value / Measured value

SERVO_S110-DP (Cl-loop pos ctrl), SERVO_S110-CAN (Cl-loop pos ctrl), SERVO_S110-PN (Cl-loop pos ctrl)

Can be changed: -	**Calculated:** -	**Access level:** 1
Data type: Integer32	**Dyn. index:** -	**Func. diagram:** 4010
P-Group: Closed loop position control	**Unit group:** -	**Unit selection:** -
Not for motor type: -	**Scaling:** -	**Expert list:** 1
Min	**Max**	**Factory setting**
- [LU]	- [LU]	- [LU]

Description: Displays the value determined by the function "reference mark search" and "measuring probe evaluation".

Index: [0] = Closed-loop position control
[1] = Encoder 1
[2] = Encoder 2
[3] = Reserved

Dependency: Refer to: p2502, r2526

Note: r2526.2 = 1 --> The measured value in r2523[0] for the position control is valid.
r2527.2 = 1 --> The measured value in r2523[1] for encoder 1 is valid.
r2528.2 = 1 --> The measured value in r2523[2] for encoder 2 is valid.

r2524 CO: LR LU/revolution / LU/revolution

SERVO_S110-DP (Cl-loop pos ctrl), SERVO_S110-CAN (Cl-loop pos ctrl), SERVO_S110-PN (Cl-loop pos ctrl)

Can be changed: -	**Calculated:** -	**Access level:** 1
Data type: FloatingPoint32	**Dyn. index:** -	**Func. diagram:** 4010
P-Group: Closed loop position control	**Unit group:** -	**Unit selection:** -
Not for motor type: -	**Scaling:** -	**Expert list:** 1
Min	**Max**	**Factory setting**
- [LU]	- [LU]	- [LU]

Description: Displays the internal length units LU/motor revolution.

Dependency: Refer to: p0404

p2525[0...n] CO: LR encoder adjustment offset / Enc_adj offset

SERVO_S110-DP (Cl-loop pos ctrl), SERVO_S110-CAN (Cl-loop pos ctrl), SERVO_S110-PN (Cl-loop pos ctrl)

Can be changed: T	**Calculated:** -	**Access level:** 4
Data type: Unsigned32	**Dyn. index:** EDS, p0140	**Func. diagram:** 4010
P-Group: Closed loop position control	**Unit group:** -	**Unit selection:** -
Not for motor type: -	**Scaling:** -	**Expert list:** 1
Min	**Max**	**Factory setting**
0 [LU]	4294967295 [LU]	0 [LU]

Description: For the absolute encoder adjustment, a drive determines the position offset.

Dependency: Refer to: p0404

Note: The position offset is only relevant for absolute encoders. The drive determines it when making the adjustment and the user should not change it.

r2526.0...9 CO/BO: LR status word / ZSW

SERVO_S110-DP (Cl-loop pos ctrl), SERVO_S110-CAN (Cl-loop pos ctrl), SERVO_S110-PN (Cl-loop pos ctrl)

Can be changed: -	**Calculated:** -	**Access level:** 1
Data type: Unsigned16	**Dyn. index:** -	**Func. diagram:** -
P-Group: Closed loop position control	**Unit group:** -	**Unit selection:** -
Not for motor type: -	**Scaling:** -	**Expert list:** 1
Min	**Max**	**Factory setting**
-	-	-

Description: Displays the status word of the position controller.

Bit field:

Bit	Signal name	1 signal	0 signal	FP
00	Position actual value valid	Yes	No	4010, 4015
01	Referencing active	Yes	No	4010
02	Measured value valid	Yes	No	3615, 4010
03	Closed-loop position control active	Yes	No	4015
04	Fixed stop reached	Yes	No	3617, 4025
05	Fixed stop outside window	Yes	No	3617, 4025
06	Position controller output limited	Yes	No	4015
07	Request tracking mode	Yes	No	-
08	Clamping active when traveling to fixed stop	Yes	No	4025
09	Setting value for adjustment valid	Yes	No	-

Dependency: Refer to: r2521, r2522, r2523

Note: Re bit 04:

The signal is influenced via p2634.

Re bit 05:

The signal is influenced via p2635.

r2527.0...2 CO/BO: LR actual value sensing status word encoder 1 / ActValSensZSW enc1

SERVO_S110-DP (Cl-loop pos ctrl), SERVO_S110-CAN (Cl-loop pos ctrl), SERVO_S110-PN (Cl-loop pos ctrl)

Can be changed: -	**Calculated:** -	**Access level:** 1
Data type: Unsigned16	**Dyn. index:** -	**Func. diagram:** -
P-Group: Closed loop position control	**Unit group:** -	**Unit selection:** -
Not for motor type: -	**Scaling:** -	**Expert list:** 1
Min	**Max**	**Factory setting**
-	-	-

Description: Displays the status word of the position actual value sensing for encoder 1.

Bit field:

Bit	Signal name	1 signal	0 signal	FP
00	Position actual value valid	Yes	No	-
01	Referencing active	Yes	No	-
02	Measured value valid	Yes	No	-

r2528.0...2 CO/BO: LR actual value sensing status word encoder 2 / ActValSensZSW enc2

SERVO_S110-DP (Cl-loop pos ctrl), SERVO_S110-CAN (Cl-loop pos ctrl), SERVO_S110-PN (Cl-loop pos ctrl)

Can be changed: -	**Calculated:** -	**Access level:** 1
Data type: Unsigned16	**Dyn. index:** -	**Func. diagram:** -
P-Group: Closed loop position control	**Unit group:** -	**Unit selection:** -
Not for motor type: -	**Scaling:** -	**Expert list:** 1
Min	**Max**	**Factory setting**
-	-	-

Description: Displays the status word of the position actual value sensing for encoder 2.

Bit field:	Bit	Signal name	1 signal	0 signal	FP
	00	Position actual value valid	Yes	No	-
	01	Referencing active	Yes	No	-
	02	Measured value valid	Yes	No	-

p2530 CI: LR position setpoint / s_set

SERVO_S110-DP (CI-loop pos ctrl), SERVO_S110-CAN (CI-loop pos ctrl), SERVO_S110-PN (CI-loop pos ctrl)

Can be changed: T | **Calculated:** - | **Access level:** 1
Data type: Unsigned32 / Integer32 | **Dyn. index:** - | **Func. diagram:** 4015, 4020
P-Group: Closed loop position control | **Unit group:** - | **Unit selection:** -
Not for motor type: - | **Scaling:** - | **Expert list:** 1

Min	Max	Factory setting
-	-	0

Description: Sets the signal source for the position setpoint of the position controller.
Dependency: Refer to: r2665
Note: When the function module "basic positioner" (r0108.4 = 1) is activated, the following BICO interconnection is established: BI: p2530 = r2665

p2531 CI: LR velocity setpoint / v_set

SERVO_S110-DP (CI-loop pos ctrl), SERVO_S110-CAN (CI-loop pos ctrl), SERVO_S110-PN (CI-loop pos ctrl)

Can be changed: T | **Calculated:** - | **Access level:** 1
Data type: Unsigned32 / Integer32 | **Dyn. index:** - | **Func. diagram:** 4015
P-Group: Closed loop position control | **Unit group:** - | **Unit selection:** -
Not for motor type: - | **Scaling:** - | **Expert list:** 1

Min	Max	Factory setting
-	-	0

Description: Sets the signal source for the velocity setpoint of the position controller.
Dependency: Refer to: r2666
Note: When the function module "basic positioner" (r0108.4 = 1) is activated, the following BICO interconnection is established: BI: p2531 = r2666

p2532 CI: LR position actual value / s_act

SERVO_S110-DP (CI-loop pos ctrl), SERVO_S110-CAN (CI-loop pos ctrl), SERVO_S110-PN (CI-loop pos ctrl)

Can be changed: T | **Calculated:** - | **Access level:** 3
Data type: Unsigned32 / Integer32 | **Dyn. index:** - | **Func. diagram:** 4015, 4020, 4025
P-Group: Closed loop position control | **Unit group:** - | **Unit selection:** -
Not for motor type: - | **Scaling:** - | **Expert list:** 1

Min	Max	Factory setting
-	-	2521[0]

Description: Sets the signal source for the position actual value of the position controller.
Dependency: Refer to: r2521

p2533[0...n] LR position setpoint filter time constant / s_set_filt T

SERVO_S110-DP (CI-loop pos ctrl), SERVO_S110-CAN (CI-loop pos ctrl), SERVO_S110-PN (CI-loop pos ctrl)

Can be changed: U, T | **Calculated:** - | **Access level:** 1
Data type: FloatingPoint32 | **Dyn. index:** DDS, p0180 | **Func. diagram:** 4015
P-Group: Closed loop position control | **Unit group:** - | **Unit selection:** -
Not for motor type: - | **Scaling:** - | **Expert list:** 1

Min	Max	Factory setting
0.00 [ms]	1000.00 [ms]	0.00 [ms]

Description: Sets the time constant for the position setpoint filter (PT1).
Note: The effective Kv factor (position loop gain) is reduced with the filter. This allows a softer control behavior with improved tolerance with respect to noise/disturbances.
Applications:
- reduces the pre-control dynamic response.
- jerk limiting.

p2534[0...n] LR speed pre-control factor / n_prectrl fact

SERVO_S110-DP (Cl-loop pos ctrl), SERVO_S110-CAN (Cl-loop pos ctrl), SERVO_S110-PN (Cl-loop pos ctrl)

Can be changed: U, T	**Calculated:** -	**Access level:** 1
Data type: FloatingPoint32	**Dyn. index:** DDS, p0180	**Func. diagram:** 4015, 4025
P-Group: Closed loop position control	**Unit group:** -	**Unit selection:** -
Not for motor type: -	**Scaling:** -	**Expert list:** 1
Min	**Max**	**Factory setting**
0.00 [%]	200.00 [%]	0.00 [%]

Description: Setting to activate and weight the speed pre-control value.
Value = 0 % --> The pre-control is de-activated.

Dependency: Refer to: p2535, p2536, r2563

Note: When the axis control loop is optimally set as well as a precisely determined equivalent time constant of the speed control loop, the pre-control factor is 100%.

p2535[0...n] LR speed pre-control balancing filter dead time / n_prectrFlt t_dead

SERVO_S110-DP (Cl-loop pos ctrl), SERVO_S110-CAN (Cl-loop pos ctrl), SERVO_S110-PN (Cl-loop pos ctrl)

Can be changed: U, T	**Calculated:** -	**Access level:** 1
Data type: FloatingPoint32	**Dyn. index:** DDS, p0180	**Func. diagram:** 4015
P-Group: Closed loop position control	**Unit group:** -	**Unit selection:** -
Not for motor type: -	**Scaling:** -	**Expert list:** 1
Min	**Max**	**Factory setting**
0.00	2.00	0.00

Description: Sets the "fractional" dead time to emulate the timing behavior of the speed control loop.
The selected multiplier refers to the position controller clock cycle (deadtime= p2535 * p0115[4]).

Dependency: Refer to: p0115, p2536

Notice: When speed pre-control is active (p2534 > 0 %), the following applies:
In addition to the set dead time (p2535), internally two position controller clock cycles are effective.
When speed pre-control is inactive (p2534 = 0 %), the following applies:
No dead time is effective (p2535 and internal).

Note: Together with p2536, the timing behavior of the closed-loop control loop can be emulated.

p2536[0...n] LR speed pre-control symmetrizing filter PT1 / n_prectrl filt PT1

SERVO_S110-DP (Cl-loop pos ctrl), SERVO_S110-CAN (Cl-loop pos ctrl), SERVO_S110-PN (Cl-loop pos ctrl)

Can be changed: U, T	**Calculated:** -	**Access level:** 1
Data type: FloatingPoint32	**Dyn. index:** DDS, p0180	**Func. diagram:** 4015
P-Group: Closed loop position control	**Unit group:** -	**Unit selection:** -
Not for motor type: -	**Scaling:** -	**Expert list:** 1
Min	**Max**	**Factory setting**
0.00 [ms]	100.00 [ms]	0.00 [ms]

Description: Sets a PT1 filter to emulate the timing behavior of the closed-speed control loop.

Dependency: Refer to: p2535

Notice: When speed pre-control is inactive (p2534 = 0 %), the following applies:
If a PT1 filter has been set, it is not effective.

Note: Together with p2535, the timing behavior of the closed-loop control loop can be emulated.

p2537 CI: LR position controller adaptation / Adaptation

SERVO_S110-DP (Cl-loop pos ctrl), SERVO_S110-CAN (Cl-loop pos ctrl), SERVO_S110-PN (Cl-loop pos ctrl)

Can be changed: T	**Calculated:** -	**Access level:** 1
Data type: Unsigned32 / FloatingPoint32	**Dyn. index:** -	**Func. diagram:** 4015
P-Group: Closed loop position control	**Unit group:** -	**Unit selection:** -
Not for motor type: -	**Scaling:** PERCENT	**Expert list:** 1
Min	**Max**	**Factory setting**
-	-	1

Description: Sets the signal source for the adaptation of the proportional gain of the position controller.

Dependency: Refer to: p2538

p2538[0...n] LR proportional gain / Kp

SERVO_S110-DP (Cl-loop pos ctrl), SERVO_S110-CAN (Cl-loop pos ctrl), SERVO_S110-PN (Cl-loop pos ctrl)

Can be changed: U, T	**Calculated:** -	**Access level:** 1
Data type: FloatingPoint32	**Dyn. index:** DDS, p0180	**Func. diagram:** 4015
P-Group: Closed loop position control	**Unit group:** -	**Unit selection:** -
Not for motor type: -	**Scaling:** -	**Expert list:** 1
Min	**Max**	**Factory setting**
0.000 [1000/min]	300.000 [1000/min]	1.000 [1000/min]

Description: Sets the proportional gain (P gain, position loop gain, Kv factor) of the position controller.

Dependency: Refer to: p2537, p2539, p2555, r2557, r2558

Note: The proportional gain is used define at which traversing velocity which following error is obtained (without pre-control)
Low proportional gain:
Slow response to a setpoint - actual value difference, the following error becomes large.
High proportional gain:
Fast response to the setpoint - actual value difference, the following error becomes small.

p2539[0...n] LR integral time / Tn

SERVO_S110-DP (Cl-loop pos ctrl), SERVO_S110-CAN (Cl-loop pos ctrl), SERVO_S110-PN (Cl-loop pos ctrl)

Can be changed: U, T	**Calculated:** -	**Access level:** 1
Data type: FloatingPoint32	**Dyn. index:** DDS, p0180	**Func. diagram:** 4015
P-Group: Closed loop position control	**Unit group:** -	**Unit selection:** -
Not for motor type: -	**Scaling:** -	**Expert list:** 1
Min	**Max**	**Factory setting**
0.00 [ms]	100000.00 [ms]	0.00 [ms]

Description: Setting to activate the integral time of the position controller.
Value = 0 ms --> The I component of the position controller is de-activated.

Dependency: Refer to: p2538, r2559

p2540 CO: LR position controller output speed limit / LR_outp limit

SERVO_S110-DP (Cl-loop pos ctrl), SERVO_S110-CAN (Cl-loop pos ctrl), SERVO_S110-PN (Cl-loop pos ctrl)

Can be changed: U, T	**Calculated:** -	**Access level:** 3
Data type: FloatingPoint32	**Dyn. index:** -	**Func. diagram:** 4015
P-Group: Closed loop position control	**Unit group:** 3_1	**Unit selection:** p0505
Not for motor type: -	**Scaling:** p2000	**Expert list:** 1
Min	**Max**	**Factory setting**
0.000 [rpm]	210000.000 [rpm]	210000.000 [rpm]

Description: Sets the speed limit of the position controller output.

Dependency: Refer to: p2541

p2541 CI: LR position controller output speed limit signal source / LR_outp lim S_src

SERVO_S110-DP (Cl-loop pos ctrl), SERVO_S110-CAN (Cl-loop pos ctrl), SERVO_S110-PN (Cl-loop pos ctrl)

Can be changed: T	**Calculated:** -	**Access level:** 1
Data type: Unsigned32 / FloatingPoint32	**Dyn. index:** -	**Func. diagram:** 4015
P-Group: Closed loop position control	**Unit group:** -	**Unit selection:** -
Not for motor type: -	**Scaling:** p2000	**Expert list:** 1
Min	**Max**	**Factory setting**
-	-	2540[0]

Description: Sets the signal source for the position controller output limit.

Dependency: Refer to: p2540

p2542 LR standstill window / Standstill window

SERVO_S110-DP (Cl-loop pos ctrl), SERVO_S110-CAN (Cl-loop pos ctrl), SERVO_S110-PN (Cl-loop pos ctrl)

Can be changed: U, T	**Calculated:** -	**Access level:** 1
Data type: Unsigned32	**Dyn. index:** -	**Func. diagram:** 4020
P-Group: Closed loop position control	**Unit group:** -	**Unit selection:** -
Not for motor type: -	**Scaling:** -	**Expert list:** 1
Min	**Max**	**Factory setting**
0 [LU]	2147483647 [LU]	200 [LU]

Description: Sets the standstill window for the standstill monitoring function.

After the standstill monitoring time expires, it is cyclically checked whether the difference between the setpoint and actual position is located within the standstill window and, if required, an appropriate fault is output.

Value = 0 --> The standstill monitoring is de-activated.

Dependency: Refer to: p2543, p2544

Refer to: F07450

Note: The following applies for the setting of the standstill and positioning window:

Standstill window (p2542) >= positioning window (p2544)

p2543 LR standstill monitoring time / t_standstill monit

SERVO_S110-DP (Cl-loop pos ctrl), SERVO_S110-CAN (Cl-loop pos ctrl), SERVO_S110-PN (Cl-loop pos ctrl)

Can be changed: U, T	**Calculated:** -	**Access level:** 1
Data type: FloatingPoint32	**Dyn. index:** -	**Func. diagram:** 4020
P-Group: Closed loop position control	**Unit group:** -	**Unit selection:** -
Not for motor type: -	**Scaling:** -	**Expert list:** 1
Min	**Max**	**Factory setting**
0.00 [ms]	100000.00 [ms]	200.00 [ms]

Description: Sets the standstill monitoring time for the standstill monitoring function.

After the standstill monitoring time expires, it is cyclically checked whether the difference between the setpoint and actual position is located within the standstill window and, if required, an appropriate fault is output.

Dependency: Refer to: p2542, p2545

Refer to: F07450

Note: The following applies for the setting of the standstill and positioning monitoring time:

Standstill monitoring time (p2543) <= positioning monitoring time (p2545)

p2544 LR positioning window / Pos_window

SERVO_S110-DP (Cl-loop pos ctrl), SERVO_S110-CAN (Cl-loop pos ctrl), SERVO_S110-PN (Cl-loop pos ctrl)

Can be changed: U, T	**Calculated:** -	**Access level:** 1
Data type: Unsigned32	**Dyn. index:** -	**Func. diagram:** 4020
P-Group: Closed loop position control	**Unit group:** -	**Unit selection:** -
Not for motor type: -	**Scaling:** -	**Expert list:** 1
Min	**Max**	**Factory setting**
0 [LU]	2147483647 [LU]	40 [LU]

Description: Sets the positioning window for the positioning monitoring function.

After the positioning monitoring time expires, it is checked once as to whether the difference between the setpoint and actual position lies within the positioning window and if required an appropriate fault is output.

Value = 0 --> The positioning monitoring function is de-activated.

Dependency: Refer to: p2542, p2545, r2684

Refer to: F07451

Note: The following applies for the setting of the standstill and positioning window:

Standstill window (p2542) >= positioning window (p2544)

p2545 LR positioning monitoring time / t_pos_monit

SERVO_S110-DP (Cl-loop pos ctrl), SERVO_S110-CAN (Cl-loop pos ctrl), SERVO_S110-PN (Cl-loop pos ctrl)

Can be changed: U, T	**Calculated:** -	**Access level:** 1
Data type: FloatingPoint32	**Dyn. index:** -	**Func. diagram:** 4020
P-Group: Closed loop position control	**Unit group:** -	**Unit selection:** -
Not for motor type: -	**Scaling:** -	**Expert list:** 1
Min	**Max**	**Factory setting**
0.00 [ms]	100000.00 [ms]	1000.00 [ms]

Description: Sets the positioning monitoring time for the positioning monitoring.
After the positioning monitoring time expires, it is checked once as to whether the difference between the setpoint and actual position lies within the positioning window and if required an appropriate fault is output.

Dependency: Refer to: p2543, p2544, r2684
Refer to: F07451

Note: The following applies for the setting of the standstill and positioning monitoring time:
Standstill monitoring time (p2543) <= positioning monitoring time (p2545)

p2546[0...n] LR dynamic following error monitoring tolerance / s_delta_monit tol

SERVO_S110-DP (Cl-loop pos ctrl), SERVO_S110-CAN (Cl-loop pos ctrl), SERVO_S110-PN (Cl-loop pos ctrl)

Can be changed: U, T	**Calculated:** -	**Access level:** 1
Data type: Unsigned32	**Dyn. index:** DDS, p0180	**Func. diagram:** 4025
P-Group: Closed loop position control	**Unit group:** -	**Unit selection:** -
Not for motor type: -	**Scaling:** -	**Expert list:** 1
Min	**Max**	**Factory setting**
0 [LU]	2147483647 [LU]	1000 [LU]

Description: Sets the tolerance for the dynamic following error monitoring.
If the dynamic following error (r2563) exceeds the selected tolerance, then an appropriate fault is output.
Value = 0 --> The dynamic following error monitoring is de-activated.

Dependency: Refer to: r2563, r2684
Refer to: F07452

Note: The tolerance bandwidth is intended to prevent the dynamic following error monitoring incorrectly responding due to operational control sequences (e.g. during load surges).

p2547 LR cam switching position 1 / Cam position 1

SERVO_S110-DP (Cl-loop pos ctrl), SERVO_S110-CAN (Cl-loop pos ctrl), SERVO_S110-PN (Cl-loop pos ctrl)

Can be changed: U, T	**Calculated:** -	**Access level:** 1
Data type: Integer32	**Dyn. index:** -	**Func. diagram:** 4025
P-Group: Closed loop position control	**Unit group:** -	**Unit selection:** -
Not for motor type: -	**Scaling:** -	**Expert list:** 1
Min	**Max**	**Factory setting**
-2147483648 [LU]	2147483647 [LU]	0 [LU]

Description: Sets the cam switching position 1.

Dependency: Refer to: p2548, r2683

Caution: Only after the axis has been referenced can it be guaranteed that the cam switching signals when output have a "true" position reference.

Note: Position actual value <= cam switching position 1 --> r2683.8 = 1 signal
Position actual value > cam switching position 1 --> r2683.8 = 0 signal

p2548 LR cam switching position 2 / Cam position 2

SERVO_S110-DP (Cl-loop pos ctrl), SERVO_S110-CAN (Cl-loop pos ctrl), SERVO_S110-PN (Cl-loop pos ctrl)

Can be changed: U, T	**Calculated:** -	**Access level:** 1
Data type: Integer32	**Dyn. index:** -	**Func. diagram:** 4025
P-Group: Closed loop position control	**Unit group:** -	**Unit selection:** -
Not for motor type: -	**Scaling:** -	**Expert list:** 1
Min	**Max**	**Factory setting**
-2147483648 [LU]	2147483647 [LU]	0 [LU]

Description: Sets the cam switching position 2.

Dependency: Refer to: p2547, r2683

Caution: Only after the axis has been referenced can it be guaranteed that the cam switching signals when output have a "true" position reference.

Note: Position actual value <= cam switching position 2 --> r2683.9 = 1 signal
Position actual value > cam switching position 2 --> r2683.9 = 0 signal

p2549 BI: LR enable 1 / Enable 1

SERVO_S110-DP (Cl-loop pos ctrl), SERVO_S110-CAN (Cl-loop pos ctrl), SERVO_S110-PN (Cl-loop pos ctrl)

Can be changed: T	**Calculated:** -	**Access level:** 1
Data type: Unsigned32 / Binary	**Dyn. index:** -	**Func. diagram:** 4015
P-Group: Closed loop position control	**Unit group:** -	**Unit selection:** -
Not for motor type: -	**Scaling:** -	**Expert list:** 1
Min	**Max**	**Factory setting**
-	-	899.2

Description: Sets the signal source for the position controller enable 1.

Dependency: Refer to: r0899, p2550

Note: The position controller is enabled by ANDing BI: p2549 and BI: p2550.

p2550 BI: LR enable 2 / Enable 2

SERVO_S110-DP (Cl-loop pos ctrl), SERVO_S110-CAN (Cl-loop pos ctrl), SERVO_S110-PN (Cl-loop pos ctrl)

Can be changed: T	**Calculated:** -	**Access level:** 1
Data type: Unsigned32 / Binary	**Dyn. index:** -	**Func. diagram:** 4015
P-Group: Closed loop position control	**Unit group:** -	**Unit selection:** -
Not for motor type: -	**Scaling:** -	**Expert list:** 1
Min	**Max**	**Factory setting**
-	-	0

Description: Sets the signal source for the position controller enable 2.

Dependency: Refer to: p2549

Note: The position controller is enabled by ANDing BI: p2549 and BI: p2550.
When the function module "closed-loop position control" or "basic positioner" is activated, the following BICO interconnection is established: BI: p2550 = 1

p2551 BI: LR setpoint signal fixed / Sig s_set pres

SERVO_S110-DP (Cl-loop pos ctrl), SERVO_S110-CAN (Cl-loop pos ctrl), SERVO_S110-PN (Cl-loop pos ctrl)

Can be changed: T	**Calculated:** -	**Access level:** 1
Data type: Unsigned32 / Binary	**Dyn. index:** -	**Func. diagram:** 4020
P-Group: Closed loop position control	**Unit group:** -	**Unit selection:** -
Not for motor type: -	**Scaling:** -	**Expert list:** 1
Min	**Max**	**Factory setting**
-	-	0

Description: Sets the signal source for the "setpoint fixed" signal.
BI: p2551 = 1 signal:
The end of the positioning operation on the setpoint side is signaled and the positioning and standstill monitoring activated.
BI: p2551 = 0 signal:
The start of a positioning operation or tracking mode on the setpoint side is signaled and the positioning and standstill monitoring de-activated.

Dependency: Refer to: p2554, r2683

Note: When the function module "basic positioner" (r0108.4 = 1) is activated, the following BICO interconnection is established: BI: p2551 = r2683.2

p2552 BI: LR signal travel to fixed stop active / Signal TfS act

SERVO_S110-DP (Cl-loop pos ctrl), SERVO_S110-CAN (Cl-loop pos ctrl), SERVO_S110-PN (Cl-loop pos ctrl)

Can be changed: T	**Calculated:** -	**Access level:** 1
Data type: Unsigned32 / Binary	**Dyn. index:** -	**Func. diagram:** 4025
P-Group: Closed loop position control	**Unit group:** -	**Unit selection:** -
Not for motor type: -	**Scaling:** -	**Expert list:** 1
Min	**Max**	**Factory setting**
-	-	0

Description: Sets the signal source for the signal "travel to fixed stop active".
BI: p2552 = 1 signal:
The activity associated with travel to fixed stop is signaled and the detection of the fixed stop is started via the maximum following error (p2634).

Dependency: Refer to: r2683

Note: When the function module "basic positioner" (r0108.4 = 1) is activated, the following BICO interconnection is established: BI: p2552 = r2683.14

p2553 BI: LR signal fixed stop reached / Signal fixed stop

SERVO_S110-DP (Cl-loop pos ctrl), SERVO_S110-CAN (Cl-loop pos ctrl), SERVO_S110-PN (Cl-loop pos ctrl)

Can be changed: T	**Calculated:** -	**Access level:** 1
Data type: Unsigned32 / Binary	**Dyn. index:** -	**Func. diagram:** 4025
P-Group: Closed loop position control	**Unit group:** -	**Unit selection:** -
Not for motor type: -	**Scaling:** -	**Expert list:** 1
Min	**Max**	**Factory setting**
-	-	0

Description: Sets the signal source for the signal "fixed stop reached".
BI: p2553 = 1 signal:
When the fixed stop is reached, this is signaled and the fixed stop monitoring window is activated.

Dependency: Refer to: r2683

Note: When the function module "basic positioner" (r0108.4 = 1) is activated, the following BICO interconnection is established: BI: p2553 = r2683.12

p2554 BI: LR signal traversing command active / Sig trav_cmnd act

SERVO_S110-DP (Cl-loop pos ctrl), SERVO_S110-CAN (Cl-loop pos ctrl), SERVO_S110-PN (Cl-loop pos ctrl)

Can be changed: T	**Calculated:** -	**Access level:** 1
Data type: Unsigned32 / Binary	**Dyn. index:** -	**Func. diagram:** 4020
P-Group: Closed loop position control	**Unit group:** -	**Unit selection:** -
Not for motor type: -	**Scaling:** -	**Expert list:** 1
Min	**Max**	**Factory setting**
-	-	0

Description: Sets the signal source for the signal "traversing command active".
BI: p2554 = 1 signal:
It is signaled that positioning is active and therefore the positioning monitoring is not activated with the signal "setpoint fixed" (p2551).

Dependency: Refer to: p2551, r2684

Note: When the function module "basic positioner" (r0108.4 = 1) is activated, the following BICO interconnection is established: BI: p2554 = r2684.15

p2555 CI: LR LU/revolution LU/mm / LU/rev LU/mm

SERVO_S110-DP (Cl-loop pos ctrl), SERVO_S110-CAN (Cl-loop pos ctrl), SERVO_S110-PN (Cl-loop pos ctrl)

Can be changed: T	**Calculated:** -	**Access level:** 3
Data type: Unsigned32 / FloatingPoint32	**Dyn. index:** -	**Func. diagram:** 4015
P-Group: Closed loop position control	**Unit group:** -	**Unit selection:** -
Not for motor type: -	**Scaling:** -	**Expert list:** 1
Min	**Max**	**Factory setting**
-	-	2524[0]

Description: Sets the signal source for the reference of the internal length units LU to motor revolution for rotary encoders and to mm for linear encoders.

Dependency: Refer to: p0404, r2524
Note: The signal value is used to convert the length unit to the speed or velocity setpoint.

r2556 CO: LR position setpoint after setpoint smoothing / s_set after interp

SERVO_S110-DP (Cl-loop pos ctrl), SERVO_S110-CAN (Cl-loop pos ctrl), SERVO_S110-PN (Cl-loop pos ctrl)

Can be changed: -	**Calculated:** -	**Access level:** 1
Data type: Integer32	**Dyn. index:** -	**Func. diagram:** 4015
P-Group: Closed loop position control	**Unit group:** -	**Unit selection:** -
Not for motor type: -	**Scaling:** -	**Expert list:** 1
Min	**Max**	**Factory setting**
- [LU]	- [LU]	- [LU]

Description: Displays the position setpoint after the setpoint smoothing.

r2557 CO: LR position controller input system deviation / LR_inp sys dev

SERVO_S110-DP (Cl-loop pos ctrl), SERVO_S110-CAN (Cl-loop pos ctrl), SERVO_S110-PN (Cl-loop pos ctrl)

Can be changed: -	**Calculated:** -	**Access level:** 1
Data type: Integer32	**Dyn. index:** -	**Func. diagram:** 4015
P-Group: Closed loop position control	**Unit group:** -	**Unit selection:** -
Not for motor type: -	**Scaling:** -	**Expert list:** 1
Min	**Max**	**Factory setting**
- [LU]	- [LU]	- [LU]

Description: Displays the difference between the position setpoint and the position actual value at the position controller input.

r2558 CO: LR position controller output P component / LR_outp P comp

SERVO_S110-DP (Cl-loop pos ctrl), SERVO_S110-CAN (Cl-loop pos ctrl), SERVO_S110-PN (Cl-loop pos ctrl)

Can be changed: -	**Calculated:** -	**Access level:** 1
Data type: FloatingPoint32	**Dyn. index:** -	**Func. diagram:** 4015
P-Group: Closed loop position control	**Unit group:** 3_1	**Unit selection:** p0505
Not for motor type: -	**Scaling:** p2000	**Expert list:** 1
Min	**Max**	**Factory setting**
- [rpm]	- [rpm]	- [rpm]

Description: Displays the P component at the output of the position controller for the speed setpoint.

r2559 CO: LR position controller output I component / LR_outp I comp

SERVO_S110-DP (Cl-loop pos ctrl), SERVO_S110-CAN (Cl-loop pos ctrl), SERVO_S110-PN (Cl-loop pos ctrl)

Can be changed: -	**Calculated:** -	**Access level:** 1
Data type: FloatingPoint32	**Dyn. index:** -	**Func. diagram:** 4015
P-Group: Closed loop position control	**Unit group:** 3_1	**Unit selection:** p0505
Not for motor type: -	**Scaling:** p2000	**Expert list:** 1
Min	**Max**	**Factory setting**
- [rpm]	- [rpm]	- [rpm]

Description: Displays the I component at the output of the position controller for the speed setpoint.

r2560 CO: LR speed setpoint / n_set

SERVO_S110-DP (Cl-loop pos ctrl), SERVO_S110-CAN (Cl-loop pos ctrl), SERVO_S110-PN (Cl-loop pos ctrl)

Can be changed: -	**Calculated:** -	**Access level:** 1
Data type: FloatingPoint32	**Dyn. index:** -	**Func. diagram:** 4015
P-Group: Closed loop position control	**Unit group:** 3_1	**Unit selection:** p0505
Not for motor type: -	**Scaling:** p2000	**Expert list:** 1
Min	**Max**	**Factory setting**
- [rpm]	- [rpm]	- [rpm]

Description: Displays the speed setpoint after limiting (CI: p2541).

r2561 CO: LR speed pre-control value / n_prectrl val

SERVO_S110-DP (Cl-loop pos ctrl), SERVO_S110-CAN (Cl-loop pos ctrl), SERVO_S110-PN (Cl-loop pos ctrl)

Can be changed: -	**Calculated:** -	**Access level:** 1
Data type: FloatingPoint32	**Dyn. index:** -	**Func. diagram:** 4015
P-Group: Closed loop position control	**Unit group:** 3_1	**Unit selection:** p0505
Not for motor type: -	**Scaling:** p2000	**Expert list:** 1
Min	**Max**	**Factory setting**
- [rpm]	- [rpm]	- [rpm]

Description: Displays the speed setpoint due to the pre-control.

r2562 CO: LR total speed setpoint / n_set total

SERVO_S110-DP (Cl-loop pos ctrl), SERVO_S110-CAN (Cl-loop pos ctrl), SERVO_S110-PN (Cl-loop pos ctrl)

Can be changed: -	**Calculated:** -	**Access level:** 1
Data type: FloatingPoint32	**Dyn. index:** -	**Func. diagram:** 4015
P-Group: Closed loop position control	**Unit group:** 3_1	**Unit selection:** p0505
Not for motor type: -	**Scaling:** p2000	**Expert list:** 1
Min	**Max**	**Factory setting**
- [rpm]	- [rpm]	- [rpm]

Description: Displays the total speed setpoint
This value is obtained from the sum of the speed pre-control and position controller output.

Dependency: Refer to: r2560, r2561

r2563 CO: LR following error dynamic model / Follow error dyn

SERVO_S110-DP (Cl-loop pos ctrl), SERVO_S110-CAN (Cl-loop pos ctrl), SERVO_S110-PN (Cl-loop pos ctrl)

Can be changed: -	**Calculated:** -	**Access level:** 1
Data type: Integer32	**Dyn. index:** -	**Func. diagram:** 4025
P-Group: Closed loop position control	**Unit group:** -	**Unit selection:** -
Not for motor type: -	**Scaling:** -	**Expert list:** 1
Min	**Max**	**Factory setting**
- [LU]	- [LU]	- [LU]

Description: Displays the dynamic following error.
This value is the deviation, corrected by the velocity-dependent component, between the position setpoint and the position actual value.

Note: For p2534 >= 100 % (pre-control activated) the following applies:
The dynamic following error (r2563) corresponds to the system deviation (r2557) at the position controller input.
For 0 % < p2534 < 100 % (pre-control activated) or p2534 = 0 % (pre-control de-activated) the following applies:
The dynamic following error (r2563) is the deviation between the measured position actual value and a value that is calculated from the position setpoint via a PT1 model. This compensates the system-related velocity-dependent system deviation for a P controller.

r2564 CO: LR torque pre-control value / M_prectrl val

SERVO_S110-DP (Cl-loop pos ctrl), SERVO_S110-CAN (Cl-loop pos ctrl), SERVO_S110-PN (Cl-loop pos ctrl)

Can be changed: -	**Calculated:** -	**Access level:** 1
Data type: FloatingPoint32	**Dyn. index:** -	**Func. diagram:** 4015
P-Group: Closed loop position control	**Unit group:** 7_1	**Unit selection:** p0505
Not for motor type: -	**Scaling:** p2003	**Expert list:** 1
Min	**Max**	**Factory setting**
- [Nm]	- [Nm]	- [Nm]

Description: Displays the torque pre-control value.

Dependency: Refer to: p1511, p1512

Note: The torque pre-control value is the derivation over time of the speed pre-control value and is referred to a moment of inertia of 1 kgm^2/2 PI. When using the pre-control, then this should be evaluated corresponding to the actual moment of inertia.

r2565 CO: LR following error actual / Following err act

SERVO_S110-DP (Cl-loop pos ctrl), SERVO_S110-CAN (Cl-loop pos ctrl), SERVO_S110-PN (Cl-loop pos ctrl)

Can be changed: -	**Calculated:** -	**Access level:** 1
Data type: Integer32	**Dyn. index:** -	**Func. diagram:** 4015
P-Group: Closed loop position control	**Unit group:** -	**Unit selection:** -
Not for motor type: -	**Scaling:** -	**Expert list:** 1
Min	**Max**	**Factory setting**
- [LU]	- [LU]	- [LU]

Description: Displays the actual following error.
This value is the deviation between the position setpoint - after fine interpolation - and the position actual value.

Notice: When speed pre-control is active (p2534 > 0 %), the following applies:
To calculate this value, the position setpoint is delayed by two position controller clock cycles.
When speed pre-control is inactive (p2534 = 0 %), the following applies:
To calculate this value, the position setpoint is delayed by two position controller clock cycles.

r2566 LR speed input pre-control / n inp prectrl

SERVO_S110-DP (Cl-loop pos ctrl), SERVO_S110-CAN (Cl-loop pos ctrl), SERVO_S110-PN (Cl-loop pos ctrl)

Can be changed: -	**Calculated:** -	**Access level:** 1
Data type: FloatingPoint32	**Dyn. index:** -	**Func. diagram:** 4015
P-Group: Closed loop position control	**Unit group:** 3_1	**Unit selection:** p0505
Not for motor type: -	**Scaling:** p2000	**Expert list:** 1
Min	**Max**	**Factory setting**
- [rpm]	- [rpm]	- [rpm]

Description: Displays the speed at the input of the pre-control channel.

Note: This display parameter is used for diagnostics even when the pre-control is inactive (p2534 = 0%).

p2567[0...n] LR torque pre-control moment of inertia / M_prectr M_inertia

SERVO_S110-DP (Cl-loop pos ctrl), SERVO_S110-CAN (Cl-loop pos ctrl), SERVO_S110-PN (Cl-loop pos ctrl)

Can be changed: U, T	**Calculated:** -	**Access level:** 3
Data type: FloatingPoint32	**Dyn. index:** DDS, p0180	**Func. diagram:** 4015
P-Group: Closed loop position control	**Unit group:** 25_1	**Unit selection:** p0100
Not for motor type: -	**Scaling:** -	**Expert list:** 1
Min	**Max**	**Factory setting**
0.000000 [kgm²]	100000.000000 [kgm²]	0.159155 [kgm²]

Description: Sets the moment of inertia for the torque pre-control.

Dependency: Refer to: p2534, r2564

Note: When calculating the torque pre-control value (r2654), the time derivation of the speed pre-control value is multiplied by 2 PI * p2567.
For reasons associated with the compatibility to earlier firmware versions, the factory setting for p2567 = 1 kgm^2/2 PI. This means that CO: r2564 remains as standard the derivation over time of the speed pre-control value and is referred, as before, to a moment of inertia of 1 kgm^2/2 PI. For torque pre-control, the moment of inertia can now be directly entered into p2567 (instead of subsequently evaluating the pre-control value.

p2568 BI: EPOS STOP cam activation / STOP cam act

SERVO_S110-DP (EPOS), SERVO_S110-CAN (EPOS), SERVO_S110-PN (EPOS)

Can be changed: T	**Calculated:** -	**Access level:** 1
Data type: Unsigned32 / Binary	**Dyn. index:** -	**Func. diagram:** 3630
P-Group: Basic positioner	**Unit group:** -	**Unit selection:** -
Not for motor type: -	**Scaling:** -	**Expert list:** 1
Min	**Max**	**Factory setting**
-	-	0

Description: Sets the signal source to activate the function "STOP cam".
BI: p2568 = 1 signal
--> The evaluation of the STOP cam minus (BI: p2569) and STOP cam plus (BI: p2570) is active.

Dependency: Refer to: p2569, p2570

Note: The traversing range can also be limited using software limit switches.

p2569 BI: EPOS STOP cam minus / STOP cam minus

SERVO_S110-DP (EPOS), SERVO_S110-CAN (EPOS), SERVO_S110-PN (EPOS)

Can be changed: T	**Calculated:** -	**Access level:** 1
Data type: Unsigned32 / Binary	**Dyn. index:** -	**Func. diagram:** 3630
P-Group: Basic positioner	**Unit group:** -	**Unit selection:** -
Not for motor type: -	**Scaling:** -	**Expert list:** 1
Min	**Max**	**Factory setting**
-	-	1

Description: Sets the signal source for the STOP cam in the negative direction of travel.

Recommendation: Set the OFF3 ramp-down time (p1135), so that the axis, after reaching the STOP cam at the maximum velocity, does not move through a higher braking travel than is actually available.

Sets message 07491 as alarm (A07491):

Set the maximum deceleration (p2573), so that the axis, after reaching the STOP cam at the maximum velocity, does not move through a higher braking travel than is actually available.

Dependency: Refer to: p1135, p2568, p2570, p2573, r2684

Refer to: F07491

Caution: The STOP cams are low active.

Sets message 07491 as fault (F07491):

For a 0 signal, the axis is stopped with the OFF3 ramp-down time (p1135), status signal r2684.13 is set to 1, saved and the appropriate fault is output. After the fault has been acknowledged, only motion moving away from the STOP cam is permitted.

For a 0/1 signal and valid travel direction, when the STOP cam is exited, this is detected and the status signal r2684.13 is set to 0.

Sets message 07491 as alarm (A07491):

For a 0 signal, the axis is stopped with the maximum deceleration (p2573), status signal r2684.13 is set to 1, saved and the appropriate alarm is output. Only motion away from the STOP cam is permitted.

For a 0/1 signal and valid travel direction, when the STOP cam is exited, this is detected and the status signal r2684.13 is set to 0 and the alarm is deleted.

p2570 BI: EPOS STOP cam plus / STOP cam plus

SERVO_S110-DP (EPOS), SERVO_S110-CAN (EPOS), SERVO_S110-PN (EPOS)

Can be changed: T	**Calculated:** -	**Access level:** 1
Data type: Unsigned32 / Binary	**Dyn. index:** -	**Func. diagram:** 3630
P-Group: Basic positioner	**Unit group:** -	**Unit selection:** -
Not for motor type: -	**Scaling:** -	**Expert list:** 1
Min	**Max**	**Factory setting**
-	-	1

Description: Sets the signal source for the STOP cam in the positive direction of travel.

Recommendation: Set the OFF3 ramp-down time (p1135), so that the axis, after reaching the STOP cam at the maximum velocity, does not move through a higher braking travel than is actually available.

Sets message 07492 as alarm (A07492):

Set the maximum deceleration (p2573), so that the axis, after reaching the STOP cam at the maximum velocity, does not move through a higher braking travel than is actually available.

Dependency: Refer to: p1135, p2568, p2569, p2573, r2684

Refer to: F07492

Caution: The STOP cams are low active.

Sets message 07492 as fault (F07492):

For a 0 signal, the axis is stopped with the OFF3 ramp-down time (p1135), status signal r2684.14 is set to 1, saved and the appropriate fault is output. After the fault has been acknowledged, only motion moving away from the STOP cam is permitted.

For a 0/1 signal and valid travel direction, when the STOP cam is exited, this is detected and the status signal r2684.14 is set to 0.

Sets message 07492 as alarm (A07492):

For a 0 signal, the axis is stopped with the maximum deceleration (p2573), status signal r2684.14 is set to 1, saved and the appropriate alarm is output. Only motion away from the STOP cam is permitted.

For a 0/1 signal and valid travel direction, when the STOP cam is exited, this is detected and the status signal r2684.14 is set to 0 and the alarm is deleted.

p2571 EPOS maximum velocity / v_max

SERVO_S110-DP (EPOS), SERVO_S110-CAN (EPOS), SERVO_S110-PN (EPOS)

Can be changed: U, T	**Calculated:** -	**Access level:** 1
Data type: Unsigned32	**Dyn. index:** -	**Func. diagram:** 3630
P-Group: Basic positioner	**Unit group:** -	**Unit selection:** -
Not for motor type: -	**Scaling:** -	**Expert list:** 1
Min	**Max**	**Factory setting**
1 [1000 LU/min]	40000000 [1000 LU/min]	30000 [1000 LU/min]

Description: Sets the maximum velocity for the function module "basic positioner" (r0108.4).

Dependency: Refer to: r1084, r1087, p2503, p2504, p2505, p2506

Note: The maximum velocity is active in all of the operating modes of the basic positioner.

The maximum velocity for the basic positioner should be aligned with the maximum speed/velocity of the speed/velocity controller:

Rotary encoders:

p2571[1000 LU/min] = min(|r1084|, |r1087|)[rpm] x p2505/p2504 x p2506/1000

Linear encoders:

p2571[1000 LU/min] = min(|r1084|, |r1087|)[m/min] x p2503/10[m]

p2572 EPOS maximum acceleration / a_max

SERVO_S110-DP (EPOS), SERVO_S110-CAN (EPOS), SERVO_S110-PN (EPOS)

Can be changed: T	**Calculated:** -	**Access level:** 1
Data type: Unsigned32	**Dyn. index:** -	**Func. diagram:** 3630
P-Group: Basic positioner	**Unit group:** -	**Unit selection:** -
Not for motor type: -	**Scaling:** -	**Expert list:** 1
Min	**Max**	**Factory setting**
1 [1000 LU/s²]	2000000 [1000 LU/s²]	100 [1000 LU/s²]

Description: Sets the maximum acceleration for the function module "basic positioner" (r0108.4).

Dependency: Refer to: p2619, p2644

Note: The maximum acceleration appears to exhibit jumps (without jerk).

"Traversing blocks" operating mode:

The programmed acceleration override (p2619) acts on the maximum acceleration.

"Direct setpoint input/MDI" mode:

The acceleration override is effective (p2644, 4000 hex = 100 %).

"Jog" and "search for reference" modes

No acceleration override is active. The axis starts with the maximum acceleration.

p2573 EPOS maximum deceleration / -a_max

SERVO_S110-DP (EPOS), SERVO_S110-CAN (EPOS), SERVO_S110-PN (EPOS)

Can be changed: T	**Calculated:** -	**Access level:** 1
Data type: Unsigned32	**Dyn. index:** -	**Func. diagram:** 3630
P-Group: Basic positioner	**Unit group:** -	**Unit selection:** -
Not for motor type: -	**Scaling:** -	**Expert list:** 1
Min	**Max**	**Factory setting**
1 [1000 LU/s²]	2000000 [1000 LU/s²]	100 [1000 LU/s²]

Description: Sets the maximum deceleration for the function module "basic positioner" (r0108.4).

Dependency: Refer to: p2620, p2645

Note: The maximum deceleration appears to exhibit jumps (without jerk).

"Traversing blocks" operating mode:

The programmed deceleration override (p2620) acts on the maximum deceleration.

"Direct setpoint input/MDI" mode:

The deceleration override is effective (p2645, 4000 hex = 100 %).

"Jog" and "search for reference" modes

No deceleration override is effective. The axis breaks with the maximum deceleration.

p2574 EPOS jerk limiting / Jerk lim

SERVO_S110-DP (EPOS), SERVO_S110-CAN (EPOS), SERVO_S110-PN (EPOS)

Can be changed: U, T	**Calculated:** -	**Access level:** 1
Data type: Unsigned32	**Dyn. index:** -	**Func. diagram:** 3635
P-Group: Basic positioner	**Unit group:** -	**Unit selection:** -
Not for motor type: -	**Scaling:** -	**Expert list:** 1
Min	**Max**	**Factory setting**
1 [1000 LU/s³]	100000000 [1000 LU/s³]	10000 [1000 LU/s³]

Description: Sets the jerk limiting

Dependency: Refer to: p2572, p2573, p2575

Note: The jerk limiting is internally converted into a jerk time as follows:

Jerk time Tr = max(p2572, p2573) / p2574

The jerk time is internally limited to 1000 ms and is rounded-off to an integer multiple of the sampling time positioning (p0115[5]).

The jerk time is valid for the acceleration and deceleration phases also for unequal maximum acceleration (p2572) and maximum deceleration (p2573).

For unequal maximum acceleration and maximum deceleration, the motion is not optimal from a time perspective as the jerk limit cannot be used for the lower of the two values.

If, in the traversing profile, the acceleration time without jerk limiting is less than the jerk time Tr, then the motion with jerk limiting is not optimum from a time perspective.

For traversing motion with a direct transition between acceleration and deceleration (i.e. jerk time is greater than the constant velocity phase), jerk can increase up to twice the parameterized jerk.

CONTINUE_FLYING with direction reversal acts internally just like a CONTINUE_WITH_STOP without the "position reached" being set. Without jerk limiting, this behavior can hardly be noticed as, when reversing, the position setpoint is only kept at zero for one interpolator clock cycle.

For block change enable CONTINUE_WITH_STOP, jerk limiting results in a longer delay time.

p2575 BI: EPOS jerk limiting activation / Jerk limit act

SERVO_S110-DP (EPOS), SERVO_S110-CAN (EPOS), SERVO_S110-PN (EPOS)

Can be changed: T	**Calculated:** -	**Access level:** 1
Data type: Unsigned32 / Binary	**Dyn. index:** -	**Func. diagram:** 3635
P-Group: Basic positioner	**Unit group:** -	**Unit selection:** -
Not for motor type: -	**Scaling:** -	**Expert list:** 1
Min	**Max**	**Factory setting**
-	-	0

Description: Sets the signal source to activate the jerk limiting.

Activating/de-activating:

- using BI: p2575 = 1 signal or 0 signal.
- using the command JERK in the traversing block (only for BI: p2575 = 0 signal).

Dependency: Refer to: p2574

Note: A change of the signal state at the binector input is only accepted at zero speed.

p2576 EPOS modulo correction modulo range / Modulo corr range

SERVO_S110-DP (EPOS), SERVO_S110-CAN (EPOS), SERVO_S110-PN (EPOS)

Can be changed: T	**Calculated:** -	**Access level:** 1
Data type: Unsigned32	**Dyn. index:** -	**Func. diagram:** 3635
P-Group: Basic positioner	**Unit group:** -	**Unit selection:** -
Not for motor type: -	**Scaling:** -	**Expert list:** 1
Min	**Max**	**Factory setting**
1 [LU]	2147482647 [LU]	360000 [LU]

Description: Sets the modulo range for axes with modulo correction.

Dependency: Refer to: p2577

p2577 BI: EPOS modulo correction activation / Modulo corr act

SERVO_S110-DP (EPOS), SERVO_S110-CAN (EPOS), SERVO_S110-PN (EPOS)

Can be changed: T	**Calculated:** -	**Access level:** 1
Data type: Unsigned32 / Binary	**Dyn. index:** -	**Func. diagram:** 3630, 3635
P-Group: Basic positioner	**Unit group:** -	**Unit selection:** -
Not for motor type: -	**Scaling:** -	**Expert list:** 1
Min	**Max**	**Factory setting**
-	-	0

Description: Sets the signal source to activate modulo correction.

Dependency: Refer to: p2576

Note: When the signal state changes at the binector input, this only becomes effective in the "ready for switching on" state.
Selecting modulo correction:
The actual position setpoint in the modulo range is corrected. The position actual value differs from the position setpoint by the following error and can also leave the modulo range.
De-selecting modulo correction:
It is based on the actual position actual value.

p2578 CI: EPOS software limit switch minus signal source / SW limSw Min S_src

SERVO_S110-DP (EPOS), SERVO_S110-CAN (EPOS), SERVO_S110-PN (EPOS)

Can be changed: T	**Calculated:** -	**Access level:** 1
Data type: Unsigned32 / Integer32	**Dyn. index:** -	**Func. diagram:** 3630
P-Group: Basic positioner	**Unit group:** -	**Unit selection:** -
Not for motor type: -	**Scaling:** -	**Expert list:** 1
Min	**Max**	**Factory setting**
-	-	2580[0]

Description: Sets the signal source for the software limit switch minus.

Dependency: Refer to: p2579, p2580, p2581, p2582
Refer to: A07469, A07477, A07479, F07481

Notice: A change to the software limit switch becomes immediately effective.
If the software limit switch is changed, then this results in the positions in the traversing blocks being checked.

Note: The following applies for the setting of the software limit switch:
Software limit switch minus < software limit switch plus

p2579 CI: EPOS software limit switch plus signal source / SW limSwPlus S_src

SERVO_S110-DP (EPOS), SERVO_S110-CAN (EPOS), SERVO_S110-PN (EPOS)

Can be changed: T	**Calculated:** -	**Access level:** 1
Data type: Unsigned32 / Integer32	**Dyn. index:** -	**Func. diagram:** 3630
P-Group: Basic positioner	**Unit group:** -	**Unit selection:** -
Not for motor type: -	**Scaling:** -	**Expert list:** 1
Min	**Max**	**Factory setting**
-	-	2581[0]

Description: Sets the signal source for the software limit switch plus.

Dependency: Refer to: p2578, p2580, p2581, p2582
Refer to: A07470, A07478, A07480, F07482

Notice: A change to the software limit switch becomes immediately effective.
If the software limit switch is changed, then this results in the positions in the traversing blocks being checked.

Note: The following applies for the setting of the software limit switch:
Software limit switch minus < software limit switch plus

p2580 CO: EPOS software limit switch minus / SW limSwitch minus

SERVO_S110-DP (EPOS), SERVO_S110-CAN (EPOS), SERVO_S110-PN (EPOS)

Can be changed: U, T	**Calculated:** -	**Access level:** 1
Data type: Integer32	**Dyn. index:** -	**Func. diagram:** 3630
P-Group: Basic positioner	**Unit group:** -	**Unit selection:** -
Not for motor type: -	**Scaling:** -	**Expert list:** 1
Min	**Max**	**Factory setting**
-2147482648 [LU]	2147482647 [LU]	-2147482648 [LU]

Description: Sets the software limit switch in the negative direction of travel.

Dependency: Refer to: p2578, p2579, p2581, p2582

p2581 CO: EPOS software limit switch plus / SW lim switch plus

SERVO_S110-DP (EPOS), SERVO_S110-CAN (EPOS), SERVO_S110-PN (EPOS)

Can be changed: U, T	**Calculated:** -	**Access level:** 1
Data type: Integer32	**Dyn. index:** -	**Func. diagram:** 3630
P-Group: Basic positioner	**Unit group:** -	**Unit selection:** -
Not for motor type: -	**Scaling:** -	**Expert list:** 1
Min	**Max**	**Factory setting**
-2147482648 [LU]	2147482647 [LU]	2147482647 [LU]

Description: Sets the software limit switch in the positive direction of travel.

Dependency: Refer to: p2578, p2579, p2580, p2582

p2582 BI: EPOS software limit switch activation / SW lim sw act

SERVO_S110-DP (EPOS), SERVO_S110-CAN (EPOS), SERVO_S110-PN (EPOS)

Can be changed: T	**Calculated:** -	**Access level:** 1
Data type: Unsigned32 / Binary	**Dyn. index:** -	**Func. diagram:** 3630
P-Group: Basic positioner	**Unit group:** -	**Unit selection:** -
Not for motor type: -	**Scaling:** -	**Expert list:** 1
Min	**Max**	**Factory setting**
-	-	0

Description: Sets the signal source to activate the "software limit switch".

Dependency: Refer to: p2578, p2579, p2580, p2581

Caution:

Software limit switch effective:

- axis is referenced (r2684.11 = 1) and BI: p2582 = 1 signal.

Software limit switch ineffective:

- modulo correction active (BI: p2577 = 1 signal).
- search for reference is executed.

Notice: Target position for relative positioning outside software limit switch:

The traversing block is started and the axis comes to a standstill at the software limit switch. An appropriate alarm is output and the traversing block is interrupted. Traversing blocks with valid position can be activated.

Target position for absolute positioning outside software limit switch:

In the "traversing blocks" mode, the traversing block is not started and an appropriate fault is output.

Axis outside the valid traversing range:

If the axis is already outside the valid traversing range, then an appropriate fault is output. The fault can be acknowledged at standstill. Traversing blocks with valid position can be activated.

Note: The traversing range can also be limited using STOP cams.

p2583 EPOS backlash compensation / Backlash comp

SERVO_S110-DP (EPOS), SERVO_S110-CAN (EPOS), SERVO_S110-PN (EPOS)

Can be changed: U, T	**Calculated:** -	**Access level:** 1
Data type: Integer32	**Dyn. index:** -	**Func. diagram:** 3635
P-Group: Basic positioner	**Unit group:** -	**Unit selection:** -
Not for motor type: -	**Scaling:** -	**Expert list:** 1
Min	**Max**	**Factory setting**
-200000 [LU]	200000 [LU]	0 [LU]

Description: Sets the amount of play (backlash) for positive or negative play.

0: The backlash compensation is de-activated.
> 0: Positive backlash (normal case)
When the direction is reversed, the encoder actual value leads the actual value.
< 0: Negative backlash
When the direction is reversed, the actual value leads the encoder actual value.

Dependency: If a stationary axis is referenced by setting the reference point, or an adjusted with absolute encoder is powered up, then the setting of p2604 is relevant for entering the compensation value.
p2604 = 1:
Traveling in the positive direction -> A compensation value is immediately entered.
Traveling in the negative direction -> A compensation value is not entered
p2604 = 0:
Traveling in the positive direction -> A compensation value is not entered
Traveling in the negative direction -> A compensation value is immediately entered.
When again setting the reference point (a referenced axis) or for "flying referencing", p2604 is not relevant but instead the history of the axis.
Refer to: p2604, r2667

p2585 EPOS jog 1 setpoint velocity / Jog 1 v_set

SERVO_S110-DP (EPOS), SERVO_S110-CAN (EPOS), SERVO_S110-PN (EPOS)

Can be changed: U, T	**Calculated:** -	**Access level:** 1
Data type: Integer32	**Dyn. index:** -	**Func. diagram:** 3610
P-Group: Basic positioner	**Unit group:** -	**Unit selection:** -
Not for motor type: -	**Scaling:** -	**Expert list:** 1
Min	**Max**	**Factory setting**
-40000000 [1000 LU/min]	40000000 [1000 LU/min]	-300 [1000 LU/min]

Description: Sets the setpoint velocity for jog 1.
Dependency: Refer to: p2587, p2589, p2591

p2586 EPOS jog 2 setpoint velocity / Jog 2 v_set

SERVO_S110-DP (EPOS), SERVO_S110-CAN (EPOS), SERVO_S110-PN (EPOS)

Can be changed: U, T	**Calculated:** -	**Access level:** 1
Data type: Integer32	**Dyn. index:** -	**Func. diagram:** 3610
P-Group: Basic positioner	**Unit group:** -	**Unit selection:** -
Not for motor type: -	**Scaling:** -	**Expert list:** 1
Min	**Max**	**Factory setting**
-40000000 [1000 LU/min]	40000000 [1000 LU/min]	300 [1000 LU/min]

Description: Sets the setpoint velocity for jog 2.
Dependency: Refer to: p2588, p2590, p2591

p2587 EPOS jog 1 traversing distance / Jog 1 distance

SERVO_S110-DP (EPOS), SERVO_S110-CAN (EPOS), SERVO_S110-PN (EPOS)

Can be changed: U, T	**Calculated:** -	**Access level:** 1
Data type: Unsigned32	**Dyn. index:** -	**Func. diagram:** 3610
P-Group: Basic positioner	**Unit group:** -	**Unit selection:** -
Not for motor type: -	**Scaling:** -	**Expert list:** 1
Min	**Max**	**Factory setting**
0 [LU]	2147482647 [LU]	1000 [LU]

Description: Sets the traversing distance for incremental jog 1.
Dependency: Refer to: p2585, p2589, p2591
Note: Incremental jog 1 is started with BI: p2591 = 1 signal and BI: p2589 = 0/1 signal.
With BI: p2589 = 0 signal, incremental jog is interrupted.

p2588 EPOS jog 2 traversing distance / Jog 2 distance

SERVO_S110-DP (EPOS), SERVO_S110-CAN (EPOS), SERVO_S110-PN (EPOS)

Can be changed: U, T	**Calculated:** -	**Access level:** 1
Data type: Unsigned32	**Dyn. index:** -	**Func. diagram:** 3610
P-Group: Basic positioner	**Unit group:** -	**Unit selection:** -
Not for motor type: -	**Scaling:** -	**Expert list:** 1
Min	**Max**	**Factory setting**
0 [LU]	2147482647 [LU]	1000 [LU]

Description: Sets the traversing distance for incremental jog 2.

Dependency: Refer to: p2586, p2590, p2591

Note: Incremental jog 2 is started with BI: p2591 = 1 signal and BI: p2590 = 0/1 signal.
With BI: p2590 = 0 signal, incremental jogging is interrupted.

p2589 BI: EPOS jog 1 signal source / Jog 1 S_src

SERVO_S110-DP (EPOS), SERVO_S110-CAN (EPOS), SERVO_S110-PN (EPOS)

Can be changed: T	**Calculated:** -	**Access level:** 1
Data type: Unsigned32 / Binary	**Dyn. index:** -	**Func. diagram:** 3610, 3625
P-Group: Basic positioner	**Unit group:** -	**Unit selection:** -
Not for motor type: -	**Scaling:** -	**Expert list:** 1
Min	**Max**	**Factory setting**
-	-	0

Description: Sets the signal source for jog 1.

Dependency: When jogging, the axis is accelerated or braked with the maximum acceleration/deceleration (p2572/p2573).
BI: p2591 = 0 signal
The axis endlessly moves with the setpoint velocity, jog 1 (p2585).
BI: p2591 = 1 signal
The axis traverses through a parameterized distance (p2585) with the setpoint velocity, jog 1 (p2587).
Refer to: p2572, p2573, p2585, p2587, p2591

Notice: The parameter may be protected as a result of p0922 or p2079 and cannot be changed.

p2590 BI: EPOS jog 2 signal source / Jog 2 S_src

SERVO_S110-DP (EPOS), SERVO_S110-CAN (EPOS), SERVO_S110-PN (EPOS)

Can be changed: T	**Calculated:** -	**Access level:** 1
Data type: Unsigned32 / Binary	**Dyn. index:** -	**Func. diagram:** 3610, 3625
P-Group: Basic positioner	**Unit group:** -	**Unit selection:** -
Not for motor type: -	**Scaling:** -	**Expert list:** 1
Min	**Max**	**Factory setting**
-	-	0

Description: Sets the signal source for jog 2.

Dependency: When jogging, the axis is accelerated or braked with the maximum acceleration/deceleration (p2572/p2573).
BI: p2591 = 0 signal
The axis endlessly moves with the setpoint velocity, jog 2 (p2586).
BI: p2591 = 1 signal
The axis traverses through a parameterized distance (p2586) with the setpoint velocity, jog 2 (p2588).
Refer to: p2572, p2573, p2586, p2588, p2591

Notice: The parameter may be protected as a result of p0922 or p2079 and cannot be changed.

p2591 BI: EPOS jogging incremental / Jog incr

SERVO_S110-DP (EPOS), SERVO_S110-CAN (EPOS), SERVO_S110-PN (EPOS)

Can be changed: T	**Calculated:** -	**Access level:** 1
Data type: Unsigned32 / Binary	**Dyn. index:** -	**Func. diagram:** 3610
P-Group: Basic positioner	**Unit group:** -	**Unit selection:** -
Not for motor type: -	**Scaling:** -	**Expert list:** 1
Min	**Max**	**Factory setting**
-	-	0

Description: Sets the signal source for jogging incremental.

Dependency: Refer to: p2585, p2586, p2587, p2588, p2589, p2590

p2593 CI: EPOS LU/revolution LU/mm / LU/rev LU/mm

SERVO_S110-DP (EPOS), SERVO_S110-CAN (EPOS), SERVO_S110-PN (EPOS)

Can be changed: T	**Calculated:** -	**Access level:** 3
Data type: Unsigned32 / FloatingPoint32	**Dyn. index:** -	**Func. diagram:** -
P-Group: Basic positioner	**Unit group:** -	**Unit selection:** -
Not for motor type: -	**Scaling:** -	**Expert list:** 1
Min	**Max**	**Factory setting**
-	-	2524[0]

Description: Sets the signal source for the reference of the internal length units LU to motor revolution for rotary encoders and to mm for linear encoders.

Dependency: Refer to: p0404, r2524, p2594

Note: The signal value is used to convert the length unit to the speed or velocity setpoint.

p2594 CI: EPOS Maximum velocity externally limited / v_Max ext lim

SERVO_S110-DP (EPOS), SERVO_S110-CAN (EPOS), SERVO_S110-PN (EPOS)

Can be changed: T	**Calculated:** -	**Access level:** 3
Data type: Unsigned32 / FloatingPoint32	**Dyn. index:** -	**Func. diagram:** -
P-Group: Basic positioner	**Unit group:** -	**Unit selection:** -
Not for motor type: -	**Scaling:** p2000	**Expert list:** 1
Min	**Max**	**Factory setting**
-	-	0

Description: Sets the signal source for the externally limited maximum velocity.

Dependency: Refer to: r2524, p2571, p2593

Warning: In order that the externally limited velocity can be effective for the EPOS operating modes, connector input p2593 must be correctly interconnected.

p2595 BI: EPOS referencing start / Ref start

SERVO_S110-DP (EPOS), SERVO_S110-CAN (EPOS), SERVO_S110-PN (EPOS)

Can be changed: T	**Calculated:** -	**Access level:** 1
Data type: Unsigned32 / Binary	**Dyn. index:** -	**Func. diagram:** 3612, 3625, 3614
P-Group: Basic positioner	**Unit group:** -	**Unit selection:** -
Not for motor type: -	**Scaling:** -	**Expert list:** 1
Min	**Max**	**Factory setting**
-	-	0

Description: Sets the signal source to start the "search for reference" or "flying referencing".
BI: p2595 = 0/1 signal
Referencing is started.
BI: p2595 = 1/0 signal
Referencing is interrupted.

Dependency: Refer to: p2597, p2598, p2599, r2684

Notice: The parameter may be protected as a result of p0922 or p2079 and cannot be changed.

Note: Search for reference (BI: p2597 = 0 signal):
The reference point approach can only be activated (0/1 edge) after traversing motion that is being processed has been completed.
With the start, where relevant, the state signal "reference point set" (r2684.11) is reset.
Flying referencing (BI: p2597 = 1 signal):
With the start, the state signal "reference point set" (r2684.11) is not reset.

p2596 BI: EPOS set reference point / Set ref_pt

SERVO_S110-DP (EPOS), SERVO_S110-CAN (EPOS), SERVO_S110-PN (EPOS)

Can be changed: T	**Calculated:** -	**Access level:** 1
Data type: Unsigned32 / Binary	**Dyn. index:** -	**Func. diagram:** 3612
P-Group: Basic positioner	**Unit group:** -	**Unit selection:** -
Not for motor type: -	**Scaling:** -	**Expert list:** 1
Min	**Max**	**Factory setting**
-	-	0

Description: Sets the signal source for the "set reference point".

Dependency: Refer to: p2598, p2599, r2684

Notice: The parameter may be protected as a result of p0922 or p2079 and cannot be changed.

Note: Reference point setting is effective in the following operating states:
- in the basic state.
- for FIXED STOP with progress condition END (corresponds to the initial state).
- for traversing block interrupted via BI: p2640 = 0 signal (intermediate stop).
- for EPOS not enabled (BI: p2656 = 0 signal) and position actual value valid (BI: p2658 = 1 signal).

p2597 BI: EPOS referencing type selection / Ref_typ select

SERVO_S110-DP (EPOS), SERVO_S110-CAN (EPOS), SERVO_S110-PN (EPOS)

Can be changed: T	**Calculated:** -	**Access level:** 1
Data type: Unsigned32 / Binary	**Dyn. index:** -	**Func. diagram:** 3612, 3614, 3625
P-Group: Basic positioner	**Unit group:** -	**Unit selection:** -
Not for motor type: -	**Scaling:** -	**Expert list:** 1
Min	**Max**	**Factory setting**
-	-	0

Description: Sets the signal source to select referencing type.
1 signal: Flying referencing
0 signal: Search for reference

Dependency: Refer to: p2595

Note: Referencing is activated as follows:
- Select the referencing type (BI: p2597)
- Start referencing (BI: p2595 = 0/1 signal)

p2598[0...3] CI: EPOS reference point coordinate signal source / Ref_pt coord S_src

SERVO_S110-DP (CI-loop pos ctrl, EPOS), SERVO_S110-CAN (CI-loop pos ctrl, EPOS), SERVO_S110-PN (CI-loop pos ctrl, EPOS)

Can be changed: T	**Calculated:** -	**Access level:** 1
Data type: Unsigned32 / Integer32	**Dyn. index:** -	**Func. diagram:** 3612, 3614
P-Group: Closed loop position control	**Unit group:** -	**Unit selection:** -
Not for motor type: -	**Scaling:** -	**Expert list:** 1
Min	**Max**	**Factory setting**
-	-	[0] 2599[0] [1] 0 [2] 0 [3] 0

Description: Sets the signal source for the reference point coordinate.
This value is used as reference for the following referencing operations:
- search for reference
- set reference point
- flying referencing
- absolute value adjustment

Index: [0] = Closed-loop position control
[1] = Encoder 1
[2] = Encoder 2
[3] = Reserved

Dependency: Refer to: p2502, p2507, p2595, p2596, p2597, p2599

Note: When the function module "basic positioner" (r0108.4 = 1) is activated, the following applies:
Incremental measuring system:
After the reference point is reached, the drive accepts the actual axis position from the position received via the connector input CI: p2598[0].
Absolute encoder:
When adjusting the encoder, the position received via the connector input is set as the actual axis position. The position offset to the actual encoder value is displayed in p2525.

p2599 CO: EPOS reference point coordinate value / Ref_pt coord val

SERVO_S110-DP (CI-loop pos ctrl), SERVO_S110-CAN (CI-loop pos ctrl), SERVO_S110-PN (CI-loop pos ctrl)

Can be changed: U, T	**Calculated:** -	**Access level:** 1
Data type: Integer32	**Dyn. index:** -	**Func. diagram:** 3612
P-Group: Closed loop position control	**Unit group:** -	**Unit selection:** -
Not for motor type: -	**Scaling:** -	**Expert list:** 1
Min	**Max**	**Factory setting**
-2147482648 [LU]	2147482647 [LU]	0 [LU]

Description: Sets the position value for the reference point coordinate.
This value is set as the actual axis position after referencing or adjustment.
Dependency: Refer to: p2507, p2525, p2595, p2596, p2597, p2598

p2600 EPOS search for reference reference point offset / Ref_pt offset

SERVO_S110-DP (EPOS), SERVO_S110-CAN (EPOS), SERVO_S110-PN (EPOS)

Can be changed: U, T	**Calculated:** -	**Access level:** 1
Data type: Integer32	**Dyn. index:** -	**Func. diagram:** 3612
P-Group: Basic positioner	**Unit group:** -	**Unit selection:** -
Not for motor type: -	**Scaling:** -	**Expert list:** 1
Min	**Max**	**Factory setting**
-2147482648 [LU]	2147482647 [LU]	0 [LU]

Description: Sets the reference point offset for search for reference.
Dependency: Refer to: p2598

p2601 EPOS flying referencing inner window / Inner window

SERVO_S110-DP (EPOS), SERVO_S110-CAN (EPOS), SERVO_S110-PN (EPOS)

Can be changed: U, T	**Calculated:** -	**Access level:** 1
Data type: Integer32	**Dyn. index:** -	**Func. diagram:** 3614
P-Group: Basic positioner	**Unit group:** -	**Unit selection:** -
Not for motor type: -	**Scaling:** -	**Expert list:** 1
Min	**Max**	**Factory setting**
0 [LU]	2147482647 [LU]	0 [LU]

Description: Sets the inner window for flying referencing.
Value = 0:
The evaluation of the inner window is de-activated.
Dependency: Refer to: p2597, p2602, r2684
Notice: The inner window must be set so that it is smaller than the outer window.
Note: If the difference between the reference point coordinate and detected actual position is less than the inner window, then no correction is executed for a referenced axis.
If the difference between the reference point coordinate and detected actual position is greater than the inner window and less than the outer window (p2602), then a correction is executed for a referenced axis.

p2602 EPOS flying referencing outer window / Outer window

SERVO_S110-DP (EPOS), SERVO_S110-CAN (EPOS), SERVO_S110-PN (EPOS)

Can be changed: U, T	**Calculated:** -	**Access level:** 1
Data type: Integer32	**Dyn. index:** -	**Func. diagram:** 3614
P-Group: Basic positioner	**Unit group:** -	**Unit selection:** -
Not for motor type: -	**Scaling:** -	**Expert list:** 1
Min	**Max**	**Factory setting**
0 [LU]	2147482647 [LU]	0 [LU]

Description: Sets the outer window for flying referencing.

Value = 0:
The evaluation of the outer window is de-activated.

Dependency: Refer to: p2597, r2684
Refer to: A07489

Notice: The inner window must be set so that it is smaller than the outer window.

Note: If the difference between the reference point coordinate and detected actual position is greater than the outer window, then no correction is executed for the referenced axis. Further, an appropriate message is output and r2684.3 is set to 1.

p2603 EPOS flying referencing, positioning mode relative / Pos_mode relative

SERVO_S110-DP (EPOS), SERVO_S110-CAN (EPOS), SERVO_S110-PN (EPOS)

Can be changed: U, T	**Calculated:** -	**Access level:** 1
Data type: Integer32	**Dyn. index:** -	**Func. diagram:** 3635
P-Group: Basic positioner	**Unit group:** -	**Unit selection:** -
Not for motor type: -	**Scaling:** -	**Expert list:** 1
Min	**Max**	**Factory setting**
0	1	1

Description: Sets the relative positioning mode for flying referencing.
Value = 1:
The corrected setpoint is not calculated into the traversing distance.
Value = 0:
The corrected setpoint is calculated into the traversing distance.

Dependency: Refer to: p2597, p2623, p2648

Caution: For p2603 = 0 the direction can change.

p2604 BI: EPOS search for reference start direction / Srch for ref dir

SERVO_S110-DP (EPOS), SERVO_S110-CAN (EPOS), SERVO_S110-PN (EPOS)

Can be changed: T	**Calculated:** -	**Access level:** 1
Data type: Unsigned32 / Binary	**Dyn. index:** -	**Func. diagram:** 3612
P-Group: Basic positioner	**Unit group:** -	**Unit selection:** -
Not for motor type: -	**Scaling:** -	**Expert list:** 1
Min	**Max**	**Factory setting**
-	-	0

Description: Sets the signal sources for the start direction of the search for reference.
1 signal: Start in the negative direction.
0 signal: Start in the positive direction.

Dependency: Refer to: p2583, p2595, p2597

p2605 EPOS search for reference approach velocity reference cam / v_appr ref_cam

SERVO_S110-DP (EPOS), SERVO_S110-CAN (EPOS), SERVO_S110-PN (EPOS)

Can be changed: U, T	**Calculated:** -	**Access level:** 1
Data type: Unsigned32	**Dyn. index:** -	**Func. diagram:** 3612
P-Group: Basic positioner	**Unit group:** -	**Unit selection:** -
Not for motor type: -	**Scaling:** -	**Expert list:** 1
Min	**Max**	**Factory setting**
1 [1000 LU/min]	40000000 [1000 LU/min]	5000 [1000 LU/min]

Description: Sets the approach velocity to the reference cam for the search for reference.

Dependency: The search for reference only starts with the approach velocity to the reference cam when there is a reference cam (p2607 = 1).
Refer to: p2595, p2597, p2604, p2606, p2607

Note: When traversing to the reference cam, the velocity override is effective.
If, at the start of the search for reference, the axis is already at the reference cam, then the axis immediately starts to traverse to the zero mark.

p2606 EPOS search for reference reference cam maximum distance / Ref_cam max s

SERVO_S110-DP (EPOS), SERVO_S110-CAN (EPOS), SERVO_S110-PN (EPOS)

Can be changed: U, T	**Calculated:** -	**Access level:** 1
Data type: Unsigned32	**Dyn. index:** -	**Func. diagram:** 3612
P-Group: Basic positioner	**Unit group:** -	**Unit selection:** -
Not for motor type: -	**Scaling:** -	**Expert list:** 1
Min	**Max**	**Factory setting**
0 [LU]	2147482647 [LU]	2147482647 [LU]

Description: Sets the maximum distance after the start of the search for reference when traversing to the reference cam.

Dependency: Refer to: p2595, p2597, p2604, p2605, p2607
Refer to: F07458

Note: When using a reversing cam, the maximum distance must be set appropriately long.

p2607 EPOS search for reference reference cam present / Ref_cam pres

SERVO_S110-DP (EPOS), SERVO_S110-CAN (EPOS), SERVO_S110-PN (EPOS)

Can be changed: U, T	**Calculated:** -	**Access level:** 1
Data type: Unsigned8	**Dyn. index:** -	**Func. diagram:** 3612
P-Group: Basic positioner	**Unit group:** -	**Unit selection:** -
Not for motor type: -	**Scaling:** -	**Expert list:** 1
Min	**Max**	**Factory setting**
0	1	1

Description: Sets whether or not a reference cam is present for the search for reference.
Value = 1: Reference cam present.
Value = 0: No reference cam present.

Dependency: Refer to: p2595, p2597, p2604, p2605, p2606

p2608 EPOS search for reference approach velocity zero mark / v_appr ref_ZM

SERVO_S110-DP (EPOS), SERVO_S110-CAN (EPOS), SERVO_S110-PN (EPOS)

Can be changed: U, T	**Calculated:** -	**Access level:** 1
Data type: Unsigned32	**Dyn. index:** -	**Func. diagram:** 3612
P-Group: Basic positioner	**Unit group:** -	**Unit selection:** -
Not for motor type: -	**Scaling:** -	**Expert list:** 1
Min	**Max**	**Factory setting**
1 [1000 LU/min]	40000000 [1000 LU/min]	300 [1000 LU/min]

Description: Sets the approach velocity after detecting the reference cam to search for the zero mark for the search for reference.

Dependency: If there is no reference cam (p2607 = 0), the search for reference immediately starts with the axis traversing to the zero mark.
Refer to: p2595, p2597, p2604, p2607, p2609, p2610

Caution:
If the reference cam is not adjusted so that at each search for reference the same zero mark for synchronization is detected, then an "incorrect" axis reference point is obtained.
After the reference cam has been left, the search for the zero mark is activated with a time delay due to internal factors. This is the reason that the reference cam should be adjusted in this center between two zero marks and the approach velocity should be adapted to the distance between two zero marks.

Note: The velocity override is not effective when traversing to the zero mark.

p2609 EPOS search for reference max distance ref cam and zero mark / Max s ref_cam ZM

SERVO_S110-DP (EPOS), SERVO_S110-CAN (EPOS), SERVO_S110-PN (EPOS)

Can be changed: U, T	**Calculated:** -	**Access level:** 1
Data type: Unsigned32	**Dyn. index:** -	**Func. diagram:** 3612
P-Group: Basic positioner	**Unit group:** -	**Unit selection:** -
Not for motor type: -	**Scaling:** -	**Expert list:** 1
Min	**Max**	**Factory setting**
0 [LU]	2147482647 [LU]	20000 [LU]

Description: Sets the maximum distance after leaving the reference cam when traversing to the zero mark.

Dependency: Refer to: p2595, p2597, p2604, p2607, p2608, p2610
Refer to: F07459

p2610 EPOS search for ref. tol. bandwidth for distance to zero mark / Tol_band to ZM

SERVO_S110-DP (EPOS), SERVO_S110-CAN (EPOS), SERVO_S110-PN (EPOS)

Can be changed: U, T	**Calculated:** -	**Access level:** 1
Data type: Unsigned32	**Dyn. index:** -	**Func. diagram:** 3612
P-Group: Basic positioner	**Unit group:** -	**Unit selection:** -
Not for motor type: -	**Scaling:** -	**Expert list:** 1
Min	**Max**	**Factory setting**
0 [LU]	2147482647 [LU]	2147482647 [LU]

Description: Sets the tolerance bandwidth for the distance to the zero mark

The zero mark is evaluated within the maximum distance between the reference cam and zero mark (p2609) minus the tolerance bandwidth for the distance to the zero mark (p2610).

Dependency: Refer to: p2609

p2611 EPOS search for reference approach velocity reference point / v_appr ref_pt

SERVO_S110-DP (EPOS), SERVO_S110-CAN (EPOS), SERVO_S110-PN (EPOS)

Can be changed: U, T	**Calculated:** -	**Access level:** 1
Data type: Unsigned32	**Dyn. index:** -	**Func. diagram:** 3612
P-Group: Basic positioner	**Unit group:** -	**Unit selection:** -
Not for motor type: -	**Scaling:** -	**Expert list:** 1
Min	**Max**	**Factory setting**
1 [1000 LU/min]	40000000 [1000 LU/min]	300 [1000 LU/min]

Description: Sets the approach velocity after detecting the zero mark to approach the reference point.

Dependency: Refer to: p2595, p2597, p2604, p2607, p2609, p2610

Note: When traversing to the reference point, the velocity override is not effective.

p2612 BI: EPOS search for reference reference cam / Ref_cam

SERVO_S110-DP (EPOS), SERVO_S110-CAN (EPOS), SERVO_S110-PN (EPOS)

Can be changed: T	**Calculated:** -	**Access level:** 1
Data type: Unsigned32 / Binary	**Dyn. index:** -	**Func. diagram:** 3612
P-Group: Basic positioner	**Unit group:** -	**Unit selection:** -
Not for motor type: -	**Scaling:** -	**Expert list:** 1
Min	**Max**	**Factory setting**
-	-	0

Description: Sets the signal source for the reference cam.

Dependency: Refer to: p2607

Notice: The parameter may be protected as a result of p0922 or p2079 and cannot be changed.

p2613 BI: EPOS search for reference reversing cam minus / Rev minus

SERVO_S110-DP (EPOS), SERVO_S110-CAN (EPOS), SERVO_S110-PN (EPOS)

Can be changed: T	**Calculated:** -	**Access level:** 1
Data type: Unsigned32 / Binary	**Dyn. index:** -	**Func. diagram:** 3612
P-Group: Basic positioner	**Unit group:** -	**Unit selection:** -
Not for motor type: -	**Scaling:** -	**Expert list:** 1
Min	**Max**	**Factory setting**
-	-	1

Description: Sets the signal source for the reversing cam in the negative direction of travel.

1 signal: Reversing cam not reached.

0 signal: Reversing cam reached.

Dependency: Refer to: p2614

Note: If, during the search for reference from the reversing cam minus and plus, a 0 signal is detected, then the axis remains stationary (at standstill).

p2614 BI: EPOS search for reference reversing cam plus / Rev plus

SERVO_S110-DP (EPOS), SERVO_S110-CAN (EPOS), SERVO_S110-PN (EPOS)

Can be changed: T	**Calculated:** -	**Access level:** 1
Data type: Unsigned32 / Binary	**Dyn. index:** -	**Func. diagram:** 3612
P-Group: Basic positioner	**Unit group:** -	**Unit selection:** -
Not for motor type: -	**Scaling:** -	**Expert list:** 1
Min	**Max**	**Factory setting**
-	-	1

Description: Sets the signal source for the reversing cam in the negative direction of travel.
1 signal: Reversing cam not reached.
0 signal: Reversing cam reached.

Dependency: Refer to: p2613

Note: If, during the search for reference from the reversing cam minus and plus, a 0 signal is detected, then the axis remains stationary (at standstill).

p2615 EPOS maximum number of traversing blocks / Trav_block qty max

SERVO_S110-DP (EPOS), SERVO_S110-CAN (EPOS), SERVO_S110-PN (EPOS)

Can be changed: C2(17)	**Calculated:** -	**Access level:** 1
Data type: Unsigned8	**Dyn. index:** -	**Func. diagram:** 3616
P-Group: Basic positioner	**Unit group:** -	**Unit selection:** -
Not for motor type: -	**Scaling:** -	**Expert list:** 1
Min	**Max**	**Factory setting**
1	16	16

Description: Sets the maximum number of traversing blocks that are available.

Dependency: Refer to: p2616, p2617, p2618, p2619, p2620, p2621, p2622, p2623, p2624

p2616[0...n] EPOS traversing block block number / Trav_blk, blkNo.

SERVO_S110-DP (EPOS), SERVO_S110-CAN (EPOS), SERVO_S110-PN (EPOS)

Can be changed: U, T	**Calculated:** -	**Access level:** 1
Data type: Integer16	**Dyn. index:** p2615	**Func. diagram:** 3616
P-Group: Basic positioner	**Unit group:** -	**Unit selection:** -
Not for motor type: -	**Scaling:** -	**Expert list:** 1
Min	**Max**	**Factory setting**
-1	63	-1

Description: Sets a block number.
-1: Invalid block number. These blocks are not taken into account.
0 ... 63: Valid block number.

Dependency: The number of indices depends on p2615.
Refer to: p2615, p2617, p2618, p2619, p2620, p2621, p2622, p2623, p2624

p2617[0...n] EPOS traversing block position / Trav_block pos

SERVO_S110-DP (EPOS), SERVO_S110-CAN (EPOS), SERVO_S110-PN (EPOS)

Can be changed: U, T	**Calculated:** -	**Access level:** 1
Data type: Integer32	**Dyn. index:** p2615	**Func. diagram:** 3616
P-Group: Basic positioner	**Unit group:** -	**Unit selection:** -
Not for motor type: -	**Scaling:** -	**Expert list:** 1
Min	**Max**	**Factory setting**
-2147482648 [LU]	2147482647 [LU]	0 [LU]

Description: Sets the target position for the traversing block.

Dependency: The number of indices depends on p2615.
Refer to: p2615, p2616, p2618, p2619, p2620, p2621, p2622, p2623, p2624

Note: The target position is approached in either relative or absolute terms depending on p2623.

p2618[0...n] EPOS traversing block velocity / Trav_block v

SERVO_S110-DP (EPOS), SERVO_S110-CAN (EPOS), SERVO_S110-PN (EPOS)

Can be changed: U, T	**Calculated:** -	**Access level:** 1
Data type: Integer32	**Dyn. index:** p2615	**Func. diagram:** 3616
P-Group: Basic positioner	**Unit group:** -	**Unit selection:** -
Not for motor type: -	**Scaling:** -	**Expert list:** 1
Min	**Max**	**Factory setting**
1 [1000 LU/min]	40000000 [1000 LU/min]	600 [1000 LU/min]

Description: Sets the velocity for the traversing block.

Dependency: The number of indices depends on p2615.
Refer to: p2615, p2616, p2617, p2619, p2620, p2621, p2622, p2623, p2624, p2646

Note: The velocity can be influenced using the velocity override (p2646).

p2619[0...n] EPOS traversing block acceleration override / Trav_block a_over

SERVO_S110-DP (EPOS), SERVO_S110-CAN (EPOS), SERVO_S110-PN (EPOS)

Can be changed: U, T	**Calculated:** -	**Access level:** 1
Data type: FloatingPoint32	**Dyn. index:** p2615	**Func. diagram:** 3616
P-Group: Basic positioner	**Unit group:** -	**Unit selection:** -
Not for motor type: -	**Scaling:** -	**Expert list:** 1
Min	**Max**	**Factory setting**
1.0 [%]	100.0 [%]	100.0 [%]

Description: Sets the acceleration override for the traversing block.
The override refers to the maximum acceleration (p2572).

Dependency: The number of indices depends on p2615.
Refer to: p2572, p2615, p2616, p2617, p2618, p2620, p2621, p2622, p2623, p2624

p2620[0...n] EPOS traversing deceleration override / Trav_block -a_over

SERVO_S110-DP (EPOS), SERVO_S110-CAN (EPOS), SERVO_S110-PN (EPOS)

Can be changed: U, T	**Calculated:** -	**Access level:** 1
Data type: FloatingPoint32	**Dyn. index:** p2615	**Func. diagram:** 3616
P-Group: Basic positioner	**Unit group:** -	**Unit selection:** -
Not for motor type: -	**Scaling:** -	**Expert list:** 1
Min	**Max**	**Factory setting**
1.0 [%]	100.0 [%]	100.0 [%]

Description: Sets the deceleration override for the traversing block.
The override refers to the maximum deceleration (p2573).

Dependency: The number of indices depends on p2615.
Refer to: p2573, p2615, p2616, p2617, p2618, p2619, p2621, p2622, p2623, p2624

Notice: If, when calculating the traversing profile, it is identified that the target position of the next block with the programmed deceleration override will not be reached without direction reversal (flying block change), then the old (actual) deceleration override remains effective.

p2621[0...n] EPOS traversing block task / Trav_block task

SERVO_S110-DP (EPOS), SERVO_S110-CAN (EPOS), SERVO_S110-PN (EPOS)

Can be changed: U, T	**Calculated:** -	**Access level:** 1
Data type: Integer16	**Dyn. index:** p2615	**Func. diagram:** 3616
P-Group: Basic positioner	**Unit group:** -	**Unit selection:** -
Not for motor type: -	**Scaling:** -	**Expert list:** 1
Min	**Max**	**Factory setting**
1	9	1

Description: Sets the required task for the traversing block.

Value:
1: POSITIONING
2: FIXED STOP
3: ENDLESS_POS
4: ENDLESS_NEG
5: WAITING
6: GOTO

7: SET_O
8: RESET_O
9: JERK

Dependency: The number of indices depends on p2615.
Refer to: p2615, p2616, p2617, p2618, p2619, p2620, p2622, p2623, p2624

p2622[0...n] EPOS traversing block task parameter / Trav_blck task_par

SERVO_S110-DP (EPOS), SERVO_S110-CAN (EPOS), SERVO_S110-PN (EPOS)

Can be changed: U, T	**Calculated:** -	**Access level:** 1
Data type: Integer32	**Dyn. index:** p2615	**Func. diagram:** 3616
P-Group: Basic positioner	**Unit group:** -	**Unit selection:** -
Not for motor type: -	**Scaling:** -	**Expert list:** 1
Min	**Max**	**Factory setting**
-2147483648	2147483647	0

Description: Sets additional information/data of the appropriate task for the traversing block.

Dependency: The number of indices depends on p2615.
Refer to: p2615, p2616, p2617, p2618, p2619, p2620, p2621, p2623, p2624

Note: The following should be set depending on the task:
FIXED STOP: Clamping torque and clamping force (rotary 0...65536 [0.01 Nm], linear 0...65536 [N])
WAIT: Delay time [ms]
GOTO: Block number
SET_O: 1, 2 or 3 - set direct output 1, 2 or 3 (both)
RESET_O: 1, 2 or 3 - set direct output 1, 2 or 3 (both)
JERK: 0 - de-activate, 1 - activate

p2623[0...n] EPOS traversing block task mode / Trav_block mode

SERVO_S110-DP (EPOS), SERVO_S110-CAN (EPOS), SERVO_S110-PN (EPOS)

Can be changed: U, T	**Calculated:** -	**Access level:** 1
Data type: Unsigned16	**Dyn. index:** p2615	**Func. diagram:** 3515, 3616
P-Group: Basic positioner	**Unit group:** -	**Unit selection:** -
Not for motor type: -	**Scaling:** -	**Expert list:** 1
Min	**Max**	**Factory setting**
0	65535	0

Description: Sets the influence of the task for the traversing block.
Value = 0000 cccc bbbb aaaa
cccc: Positioning mode
cccc = 0000 --> ABSOLUTE
cccc = 0001 --> RELATIVE
cccc = 0010 --> ABS_POS (only for a rotary axis with modulo correction)
cccc = 0011 --> ABS_NEG (only for a rotary axis with modulo correction)
bbbb: Progression condition
bbbb = 0000 --> END
bbbb = 0001 --> CONTINUE WITH STOP
bbbb = 0010 --> CONTINUE FLYING
bbbb = 0011 --> CONTINUE EXTERNAL
bbbb = 0100 --> CONTINUE EXTERNAL WAIT
bbbb = 0101 --> CONTINUE EXTERNAL ALARM
aaaa: IDs
aaaa = 000x --> show/hide block (x = 0: show, x = 1: hide)

Dependency: The number of indices depends on p2615.
Refer to: p2615, p2616, p2617, p2618, p2619, p2620, p2621, p2622, p2624

p2624 EPOS traversing block sorting / Trav_block sort

SERVO_S110-DP (EPOS), SERVO_S110-CAN (EPOS), SERVO_S110-PN (EPOS)

Can be changed: U, T	**Calculated:** -	**Access level:** 1
Data type: Unsigned16	**Dyn. index:** -	**Func. diagram:** 3616
P-Group: Basic positioner	**Unit group:** -	**Unit selection:** -
Not for motor type: -	**Scaling:** -	**Expert list:** 1
Min	**Max**	**Factory setting**
0	1	0

Description: Sets the traversing blocks for sorting corresponding to their block number.
Procedure: Set p2624 = 0 --> 1.
Sorting is started and the parameters are automatically reset to zero once the operation has been completed.

Dependency: Refer to: p2615, p2616, p2617, p2618, p2619, p2620, p2621, p2622, p2623

Note: After sorting, the traversing blocks are written at the beginning of the memory in increasing sequence without any gaps.

p2625 BI: EPOS traversing block selection bit 0 / Trav_blk sel bit 0

SERVO_S110-DP (EPOS), SERVO_S110-CAN (EPOS), SERVO_S110-PN (EPOS)

Can be changed: T	**Calculated:** -	**Access level:** 1
Data type: Unsigned32 / Binary	**Dyn. index:** -	**Func. diagram:** 3616, 3640
P-Group: Basic positioner	**Unit group:** -	**Unit selection:** -
Not for motor type: -	**Scaling:** -	**Expert list:** 1
Min	**Max**	**Factory setting**
-	-	0

Description: Sets the signal source to select the traversing block, bit 0.

Dependency: Binector inputs p2625, p2626, p2627, p2628, p2629 and p2630 are used to select one of the maximum of 64 traversing blocks.
Refer to: p2626, p2627, p2628, p2629, p2630

p2626 BI: EPOS traversing block selection bit 1 / Trav_blk sel bit 1

SERVO_S110-DP (EPOS), SERVO_S110-CAN (EPOS), SERVO_S110-PN (EPOS)

Can be changed: T	**Calculated:** -	**Access level:** 1
Data type: Unsigned32 / Binary	**Dyn. index:** -	**Func. diagram:** 3616, 3640
P-Group: Basic positioner	**Unit group:** -	**Unit selection:** -
Not for motor type: -	**Scaling:** -	**Expert list:** 1
Min	**Max**	**Factory setting**
-	-	0

Description: Sets the signal source to select the traversing block, bit 1.

Dependency: Binector inputs p2625, p2626, p2627, p2628, p2629 and p2630 are used to select one of the maximum of 64 traversing blocks.
Refer to: p2625, p2627, p2628, p2629, p2630

p2627 BI: EPOS traversing block selection bit 2 / Trav_blk sel bit 2

SERVO_S110-DP (EPOS), SERVO_S110-CAN (EPOS), SERVO_S110-PN (EPOS)

Can be changed: T	**Calculated:** -	**Access level:** 1
Data type: Unsigned32 / Binary	**Dyn. index:** -	**Func. diagram:** 3616, 3640
P-Group: Basic positioner	**Unit group:** -	**Unit selection:** -
Not for motor type: -	**Scaling:** -	**Expert list:** 1
Min	**Max**	**Factory setting**
-	-	0

Description: Sets the signal source to select the traversing block, bit 2.

Dependency: Binector inputs p2625, p2626, p2627, p2628, p2629 and p2630 are used to select one of the maximum of 64 traversing blocks.
Refer to: p2625, p2626, p2628, p2629, p2630

p2628 BI: EPOS traversing block selection bit 3 / Trav_blk sel bit 3

SERVO_S110-DP (EPOS), SERVO_S110-CAN (EPOS), SERVO_S110-PN (EPOS)

Can be changed: T	**Calculated:** -	**Access level:** 1
Data type: Unsigned32 / Binary	**Dyn. index:** -	**Func. diagram:** 3616, 3640
P-Group: Basic positioner	**Unit group:** -	**Unit selection:** -
Not for motor type: -	**Scaling:** -	**Expert list:** 1
Min	**Max**	**Factory setting**
-	-	0

Description: Sets the signal source to select the traversing block, bit 3.

Dependency: Binector inputs p2625, p2626, p2627, p2628, p2629 and p2630 are used to select one of the maximum of 64 traversing blocks.
Refer to: p2625, p2626, p2627, p2629, p2630

p2629 BI: EPOS traversing block selection bit 4 / Trav_blk sel bit 4

SERVO_S110-DP (EPOS), SERVO_S110-CAN (EPOS), SERVO_S110-PN (EPOS)

Can be changed: T	**Calculated:** -	**Access level:** 1
Data type: Unsigned32 / Binary	**Dyn. index:** -	**Func. diagram:** 3616, 3640
P-Group: Basic positioner	**Unit group:** -	**Unit selection:** -
Not for motor type: -	**Scaling:** -	**Expert list:** 1
Min	**Max**	**Factory setting**
-	-	0

Description: Sets the signal source to select the traversing block, bit 4.

Dependency: Binector inputs p2625, p2626, p2627, p2628, p2629 and p2630 are used to select one of the maximum of 64 traversing blocks.
Refer to: p2625, p2626, p2627, p2628, p2630

p2630 BI: EPOS traversing block selection bit 5 / Trav_blk sel bit 5

SERVO_S110-DP (EPOS), SERVO_S110-CAN (EPOS), SERVO_S110-PN (EPOS)

Can be changed: T	**Calculated:** -	**Access level:** 1
Data type: Unsigned32 / Binary	**Dyn. index:** -	**Func. diagram:** 3616, 3640
P-Group: Basic positioner	**Unit group:** -	**Unit selection:** -
Not for motor type: -	**Scaling:** -	**Expert list:** 1
Min	**Max**	**Factory setting**
-	-	0

Description: Sets the signal source to select the traversing block, bit 5.

Dependency: Binector inputs p2625, p2626, p2627, p2628, p2629 and p2630 are used to select one of the maximum of 64 traversing blocks.
Refer to: p2625, p2626, p2627, p2628, p2629

p2631 BI: EPOS activate traversing task (0 -> 1) / Trav_task act

SERVO_S110-DP (EPOS), SERVO_S110-CAN (EPOS), SERVO_S110-PN (EPOS)

Can be changed: T	**Calculated:** -	**Access level:** 1
Data type: Unsigned32 / Binary	**Dyn. index:** -	**Func. diagram:** 3616, 3625
P-Group: Basic positioner	**Unit group:** -	**Unit selection:** -
Not for motor type: -	**Scaling:** -	**Expert list:** 1
Min	**Max**	**Factory setting**
-	-	0

Description: Sets the signal source for "activating traversing task".
BI: p2631 = 0/1 signal
The traversing task, selected using BI: p2625 ... p2630, is started.

Dependency: Refer to: p2625, p2626, p2627, p2628, p2629, p2630, p2640, p2641

Notice: The parameter may be protected as a result of p0922 or p2079 and cannot be changed.

Note: To start a traversing block, the axis must be referenced (r2684.11 = 1).
The status signal r2684.12 = 0/1 signal is used for acknowledgement.
A traversing task can be influenced using the following signals:
- intermediate stop via BI: p2640.
- reject traversing task via BI: p2641.

p2632 EPOS external block change evaluation / Ext BlckChg eval

SERVO_S110-DP (EPOS), SERVO_S110-CAN (EPOS), SERVO_S110-PN (EPOS)

Can be changed: T	**Calculated:** -	**Access level:** 1
Data type: Integer16	**Dyn. index:** -	**Func. diagram:** 3615, 3616
P-Group: Basic positioner	**Unit group:** -	**Unit selection:** -
Not for motor type: -	**Scaling:** -	**Expert list:** 1
Min	**Max**	**Factory setting**
0	1	0

Description: Sets the mode to evaluate "external block change".
Value: 0: External block change via the measuring probe
1: External block change via BI: p2633
Dependency: Refer to: p2623, p2633, r2677, r2678
Note: In the mode "external block change via measuring probe (p2632 = 0), the following applies:
When starting a traversing block with the block change enable CONTINUE_EXTERNAL, CONTINUE_EXTERNAL_WAIT and CONTINUE_EXTERNAL_ALARM an activated "flying referencing" is interrupted. After ending the block, "flying referencing" must be re-activated via BI: p2595 = 0/1 signal.

p2633 BI: EPOS external block change (0 -> 1) / Ext BlckChg (0->1)

SERVO_S110-DP (EPOS), SERVO_S110-CAN (EPOS), SERVO_S110-PN (EPOS)

Can be changed: T	**Calculated:** -	**Access level:** 1
Data type: Unsigned32 / Binary	**Dyn. index:** -	**Func. diagram:** 3615
P-Group: Basic positioner	**Unit group:** -	**Unit selection:** -
Not for motor type: -	**Scaling:** -	**Expert list:** 1
Min	**Max**	**Factory setting**
-	-	0

Description: Sets the signal source for "external block change".
BI: p2633 = 0/1 signal
Dependency: The evaluation of the signal is only active p2632 = 1.
Refer to: p2623, p2632, p2640, p2641, r2677, r2678
Notice: The parameter may be protected as a result of p0922 or p2079 and cannot be changed.
Note: A 0/1 edge initiates a flying block change in the subsequent traversing block.
When the external block change is identified, the actual position is saved in r2678.
A traversing task can be influenced using the following signals:
- intermediate stop via BI: p2640.
- reject traversing task via BI: p2641.

p2634[0...n] EPOS fixed stop maximum following error / Following err max

SERVO_S110-DP (CI-loop pos ctrl), SERVO_S110-CAN (CI-loop pos ctrl), SERVO_S110-PN (CI-loop pos ctrl)

Can be changed: U, T	**Calculated:** -	**Access level:** 1
Data type: Unsigned32	**Dyn. index:** DDS, p0180	**Func. diagram:** 3617, 4025
P-Group: Closed loop position control	**Unit group:** -	**Unit selection:** -
Not for motor type: -	**Scaling:** -	**Expert list:** 1
Min	**Max**	**Factory setting**
0 [LU]	2147482647 [LU]	1000 [LU]

Description: Sets the following error to detect the "fixed stop reached" state (r2526.4).
Dependency: Refer to: r2526, p2621, r2675
Note: The state "fixed stop reached" is detected if the following error exceeds the theoretically calculated following error value by p2634.

p2635 EPOS fixed stop monitoring window / Fixed stop monit

SERVO_S110-DP (Cl-loop pos ctrl), SERVO_S110-CAN (Cl-loop pos ctrl), SERVO_S110-PN (Cl-loop pos ctrl)

Can be changed: U, T	**Calculated:** -	**Access level:** 1
Data type: Unsigned32	**Dyn. index:** -	**Func. diagram:** 3617, 4025
P-Group: Closed loop position control	**Unit group:** -	**Unit selection:** -
Not for motor type: -	**Scaling:** -	**Expert list:** 1
Min	**Max**	**Factory setting**
0 [LU]	2147482647 [LU]	100 [LU]

Description: Sets the monitoring window of the actual position after the fixed stop is reached.

Dependency: Refer to: r2526, r2683
Refer to: F07484

Note: If, after the fixed stop is reached, the end stop shifts in either the positive or negative direction by more than the value set here, then BO: r2526.5 is set to 1 and an appropriate message is output.

p2637 BI: EPOS fixed stop reached / Fixed stop reached

SERVO_S110-DP (EPOS), SERVO_S110-CAN (EPOS), SERVO_S110-PN (EPOS)

Can be changed: T	**Calculated:** -	**Access level:** 1
Data type: Unsigned32 / Binary	**Dyn. index:** -	**Func. diagram:** 3616, 3617
P-Group: Basic positioner	**Unit group:** -	**Unit selection:** -
Not for motor type: -	**Scaling:** -	**Expert list:** 1
Min	**Max**	**Factory setting**
-	-	2526.4

Description: Sets the signal source for the feedback signal "fixed stop reached".
BI: p2637 = 1 signal
Fixed stop is reached.
BI: p2637 = 0 signal
Fixed stop is not reached.

Dependency: Refer to: r2526, p2634

Notice: The parameter may be protected as a result of p0922 or p2079 and cannot be changed.

Note: The identification of "fixed stop reached" is, for the factory setting, dependent on the signal BO: r2526.4 (fixed stop reached). This signal is influenced via p2634 (EPOS fixed stop, maximum following error).

p2638 BI: EPOS fixed stop outside the monitoring window / Fixed stop outside

SERVO_S110-DP (EPOS), SERVO_S110-CAN (EPOS), SERVO_S110-PN (EPOS)

Can be changed: T	**Calculated:** -	**Access level:** 3
Data type: Unsigned32 / Binary	**Dyn. index:** -	**Func. diagram:** 3616, 3617
P-Group: Basic positioner	**Unit group:** -	**Unit selection:** -
Not for motor type: -	**Scaling:** -	**Expert list:** 1
Min	**Max**	**Factory setting**
-	-	2526.5

Description: Sets the signal source for the feedback signal "fixed stop outside the monitoring window".
BI: p2638 = 1 signal
Fixed stop is located outside the monitoring window.
BI: p2638 = 0 signal
Fixed stop is inside the monitoring window.

Dependency: Refer to: r2526, p2635

Note: The identification of "fixed stop outside the monitoring window" is, for the factory setting, dependent on signal BO: r2526.5 (fixed stop outside window). This signal is influenced via p2635 (EPOS fixed stop monitoring window).

p2639 BI: EPOS torque limit reached / M_limit reached

SERVO_S110-DP (EPOS), SERVO_S110-CAN (EPOS), SERVO_S110-PN (EPOS)

Can be changed: T	**Calculated:** -	**Access level:** 3
Data type: Unsigned32 / Binary	**Dyn. index:** -	**Func. diagram:** 3616
P-Group: Basic positioner	**Unit group:** -	**Unit selection:** -
Not for motor type: -	**Scaling:** -	**Expert list:** 1
Min	**Max**	**Factory setting**
-	-	1407.7

Description: Sets the signal source for the feedback signal "torque limit reached" when traversing to fixed stop.
BI: p2639 = 1 signal
Torque limit is reached.
BI: p2639 = 0 signal
Torque limit is not reached.

Dependency: Refer to: r1407

Note: The feedback signal from "torque limit reached" is, for the factory setting, dependent on the signal BO: r1407.7 (torque limit reached).

p2640 BI: EPOS intermediate stop (0 signal) / Intermediate stop

SERVO_S110-DP (EPOS), SERVO_S110-CAN (EPOS), SERVO_S110-PN (EPOS)

Can be changed: T	**Calculated:** -	**Access level:** 1
Data type: Unsigned32 / Binary	**Dyn. index:** -	**Func. diagram:** 3616, 3620, 3625
P-Group: Basic positioner	**Unit group:** -	**Unit selection:** -
Not for motor type: -	**Scaling:** -	**Expert list:** 1
Min	**Max**	**Factory setting**
-	-	0

Description: Sets the signal source for the "no intermediate stop/intermediate stop".
BI: p2640 = 1 signal
No intermediate stop.
BI: p2640 = 0 signal
Intermediate stop.

Dependency: Refer to: p2631, p2641, p2647, p2649

Caution: For BI: p2649 = 1 signal, the following applies:
Motion starts without any explicit control signal.

Notice: The parameter may be protected as a result of p0922 or p2079 and cannot be changed.

Note: This signal is only effective in the modes "traversing blocks" and "direct setpoint input/MDI".
When activating the intermediate stop, the axis brakes with the parameterized deceleration (p2620 or p2645).

p2641 BI: EPOS reject traversing task (0 signal) / Trav_task reject

SERVO_S110-DP (EPOS), SERVO_S110-CAN (EPOS), SERVO_S110-PN (EPOS)

Can be changed: T	**Calculated:** -	**Access level:** 1
Data type: Unsigned32 / Binary	**Dyn. index:** -	**Func. diagram:** 3616, 3620, 3625
P-Group: Basic positioner	**Unit group:** -	**Unit selection:** -
Not for motor type: -	**Scaling:** -	**Expert list:** 1
Min	**Max**	**Factory setting**
-	-	0

Description: Sets the signal source for "do not reject traversing task/reject traversing task".
BI: p2641 = 1 signal
Do not reject traversing task.
BI: p2641 = 0 signal
Reject traversing task.

Dependency: Refer to: p2631, p2640, p2647, p2649

Caution: For BI: p2649 = 1 signal, the following applies:
Motion starts without any explicit control signal.

Notice: The parameter may be protected as a result of p0922 or p2079 and cannot be changed.

Note: This signal is only effective in the modes "traversing blocks" and "direct setpoint input/MDI".
When activating reject traversing tasks, then the axis brakes with the maximum deceleration (p2573).

p2642 CI: EPOS direct setpoint input/MDI position setpoint / MDI s_set

SERVO_S110-DP (EPOS), SERVO_S110-CAN (EPOS), SERVO_S110-PN (EPOS)

Can be changed: T	**Calculated:** -	**Access level:** 1
Data type: Unsigned32 / Integer32	**Dyn. index:** -	**Func. diagram:** 3618
P-Group: Basic positioner	**Unit group:** -	**Unit selection:** -
Not for motor type: -	**Scaling:** -	**Expert list:** 1
Min	**Max**	**Factory setting**
-	-	2690[0]

Description: Sets the signal source for the position setpoint in the mode "direct setpoint input/MDI".
Dependency: Refer to: p2648, p2649, p2650, p2690
Notice: The parameter may be protected as a result of p0922 or p2079 and cannot be changed.
Note: Depending on p2649, the position setpoint is either transferred continuously or edge-triggered.
The position setpoint input is interpreted as length unit [LU].

p2643 CI: EPOS direct setpoint input/MDI velocity setpoint / MDI v_set

SERVO_S110-DP (EPOS), SERVO_S110-CAN (EPOS), SERVO_S110-PN (EPOS)

Can be changed: T	**Calculated:** -	**Access level:** 1
Data type: Unsigned32 / Integer32	**Dyn. index:** -	**Func. diagram:** 3618
P-Group: Basic positioner	**Unit group:** -	**Unit selection:** -
Not for motor type: -	**Scaling:** -	**Expert list:** 1
Min	**Max**	**Factory setting**
-	-	2691[0]

Description: Sets the signal source for the velocity setpoint in the "direct setpoint input/MDI mode".
Dependency: Refer to: p2649, p2650, p2691
Notice: The parameter may be protected as a result of p0922 or p2079 and cannot be changed.
Note: Depending on p2649, the velocity setpoint is either transferred continuously or edge-triggered.
The velocity setpoint input is interpreted as [1000 LU/min].

p2644 CI: EPOS direct setpoint input/MDI acceleration override / MDI a_over

SERVO_S110-DP (EPOS), SERVO_S110-CAN (EPOS), SERVO_S110-PN (EPOS)

Can be changed: T	**Calculated:** -	**Access level:** 1
Data type: Unsigned32 / FloatingPoint32	**Dyn. index:** -	**Func. diagram:** 3618
P-Group: Basic positioner	**Unit group:** -	**Unit selection:** -
Not for motor type: -	**Scaling:** PERCENT	**Expert list:** 1
Min	**Max**	**Factory setting**
-	-	2692[0]

Description: Sets the signal source for the acceleration override in the operating mode "direct setpoint input/MDI".
Dependency: Refer to: p2649, p2650, p2692
Notice: The parameter may be protected as a result of p0922 or p2079 and cannot be changed.
Note: Depending on p2649, the acceleration override is either transferred continuously or edge-triggered.
The signal value 4000 hex (16384 dec) corresponds to 100 %.

p2645 CI: EPOS direct setpoint input/MDI deceleration override / MDI -a_over

SERVO_S110-DP (EPOS), SERVO_S110-CAN (EPOS), SERVO_S110-PN (EPOS)

Can be changed: T	**Calculated:** -	**Access level:** 1
Data type: Unsigned32 / FloatingPoint32	**Dyn. index:** -	**Func. diagram:** 3618
P-Group: Basic positioner	**Unit group:** -	**Unit selection:** -
Not for motor type: -	**Scaling:** PERCENT	**Expert list:** 1
Min	**Max**	**Factory setting**
-	-	2693[0]

Description: Sets the signal source for the deceleration override in the operating mode "direct setpoint input/MDI".
Dependency: Refer to: p2649, p2650, p2693

Notice: If, when calculating the traversing profile, it is identified that the target position with the programmed deceleration override cannot be reached without reversing the direction, then when accepting the dynamic values, the larger deceleration override is accepted and becomes effective.
The parameter may be protected as a result of p0922 or p2079 and cannot be changed.

Note: Depending on p2649, the deceleration override is either transferred continuously or edge-triggered.
The signal value 4000 hex (16384 dec) corresponds to 100 %.

p2646 CI: EPOS velocity override / v_over

SERVO_S110-DP (EPOS), SERVO_S110-CAN (EPOS), SERVO_S110-PN (EPOS)

Can be changed: T	**Calculated:** -	**Access level:** 1
Data type: Unsigned32 / FloatingPoint32	**Dyn. index:** -	**Func. diagram:** 3630
P-Group: Basic positioner	**Unit group:** -	**Unit selection:** -
Not for motor type: -	**Scaling:** PERCENT	**Expert list:** 1
Min	**Max**	**Factory setting**
-	-	1

Description: Sets the signal source for the velocity override.
This velocity override is effective in the following operating modes "direct setpoint input/MDI", "traversing blocks", "jogging" and "search for reference" (when approaching the reference cam).

Dependency: Refer to: p2571, p2585, p2586, p2605, p2618, p2643, r2681

Notice: The parameter may be protected as a result of p0922 or p2079 and cannot be changed.

Note: The effective override (r2681) can differ from the specified override due to limits (e.g. maximum velocity).

p2647 BI: EPOS direct setpoint input/MDI selection / MDI selection

SERVO_S110-DP (EPOS), SERVO_S110-CAN (EPOS), SERVO_S110-PN (EPOS)

Can be changed: T	**Calculated:** -	**Access level:** 1
Data type: Unsigned32 / Binary	**Dyn. index:** -	**Func. diagram:** 3620, 3625, 3640
P-Group: Basic positioner	**Unit group:** -	**Unit selection:** -
Not for motor type: -	**Scaling:** -	**Expert list:** 1
Min	**Max**	**Factory setting**
-	-	0

Description: Sets the signal source for selecting the operating mode "direct setpoint input/MDI".

Dependency: Refer to: p2640, p2641, p2642, p2643, p2644, p2645, p2646, p2648, p2649, p2650, p2651, p2652, p2653

Note: In this mode, using BI: p2653 it is possible to make a flying changeover between setting-up and positioning.
In this mode, even if the axis is not referenced (r2684.11 = 0) relative positioning is possible.

p2648 BI: EPOS direct setpoint input/MDI positioning type / MDI pos_type

SERVO_S110-DP (EPOS), SERVO_S110-CAN (EPOS), SERVO_S110-PN (EPOS)

Can be changed: T	**Calculated:** -	**Access level:** 1
Data type: Unsigned32 / Binary	**Dyn. index:** -	**Func. diagram:** 3620
P-Group: Basic positioner	**Unit group:** -	**Unit selection:** -
Not for motor type: -	**Scaling:** -	**Expert list:** 1
Min	**Max**	**Factory setting**
-	-	0

Description: Sets the signal source for the positioning type in the mode "direct setpoint input/MDI".
BI: p2648 = 1 signal
Absolute positioning is selected.
BI: p2648 = 0 signal
Relative positioning is selected.

Dependency: Refer to: p2649, p2650, p2654
Refer to: A07461, F07488

Notice: Absolute positioning:
To traverse, the reference point must be set (r2684.11 = 1).
Relative positioning:
To traverse, it is not necessary that the reference point is set.

Note: Depending on p2649, the positioning type is either transferred continuously or edge-triggered.
Binector input p2648 is only evaluated when connector input p2654 = 0. If p2654 is a value other than 0, the positioning type is evaluated by means of the set signal source.

p2649 BI: EPOS direct setpoint input/MDI transfer type selection / MDI trans_type sel

SERVO_S110-DP (EPOS), SERVO_S110-CAN (EPOS), SERVO_S110-PN (EPOS)

Can be changed: T	**Calculated:** -	**Access level:** 1
Data type: Unsigned32 / Binary	**Dyn. index:** -	**Func. diagram:** 3620
P-Group: Basic positioner	**Unit group:** -	**Unit selection:** -
Not for motor type: -	**Scaling:** -	**Expert list:** 1
Min	**Max**	**Factory setting**
-	-	0

Description: Sets the signal source to define how values are transferred in the operating mode "direct setpoint input/MDI".
BI: p2649 = 1 signal
Values are continually transferred (refer to parameter under dependency).
BI: p2649 = 0 signal
The values are transferred for BI: p2650 = 0/1 signal.

Dependency: Refer to: p2642, p2643, p2644, p2645, p2648, p2650, p2651, p2652

Caution: For BI: p2649 = 1 signal, the following applies:
Motion starts without any explicit control signal.

Note: Parameter p2649 can only be changed when p0922 (p2079) = 999.

p2650 BI: EPOS direct setpoint input/MDI setpoint acceptance edge / MDI setp_accept

SERVO_S110-DP (EPOS), SERVO_S110-CAN (EPOS), SERVO_S110-PN (EPOS)

Can be changed: T	**Calculated:** -	**Access level:** 1
Data type: Unsigned32 / Binary	**Dyn. index:** -	**Func. diagram:** 3620
P-Group: Basic positioner	**Unit group:** -	**Unit selection:** -
Not for motor type: -	**Scaling:** -	**Expert list:** 1
Min	**Max**	**Factory setting**
-	-	0

Description: Sets the signal source to accept the values for edge-triggered selection (BI: p2649 = 0 signal) in the operating mode "direct setpoint input/MDI".
BI: p2650 = 0/1 signal and BI: p2649 = 0 signal
Values are accepted, edge-triggered (refer to parameter under dependency).

Dependency: Refer to: p2640, p2641, p2642, p2643, p2644, p2645, p2648, p2649, p2651, p2652, r2684

Notice: The parameter may be protected as a result of p0922 or p2079 and cannot be changed.

Note: The status signal r2684.12 = 0/1 signal is used for acknowledgement.
The operating mode "direct setpoint input/MDI" can be influenced via the following signals:
- intermediate stop via BI: p2640.
- reject traversing task via BI: p2641.

p2651 BI: EPOS direct setpoint input/MDI direction selection, positive / MDI dir_sel pos

SERVO_S110-DP (EPOS), SERVO_S110-CAN (EPOS), SERVO_S110-PN (EPOS)

Can be changed: T	**Calculated:** -	**Access level:** 1
Data type: Unsigned32 / Binary	**Dyn. index:** -	**Func. diagram:** 3620
P-Group: Basic positioner	**Unit group:** -	**Unit selection:** -
Not for motor type: -	**Scaling:** -	**Expert list:** 1
Min	**Max**	**Factory setting**
-	-	0

Description: Sets the signal source for the positive direction selection in the operating mode "direct setpoint input/MDI".

Dependency: Refer to: p2576, p2648, p2649, p2650, p2652, p2653, p2654

Note: The following applies for "setting-up":
- the traversing direction can be entered using this binector input.
- if both directions (p2651, p2652) are selected, then the axis remains stationary (zero speed).
- if both directions (p2651, p2652) are de-selected, then the axis remains stationary (zero speed).

The following applies for "positioning":
Using binector inputs p2651 and p2652, when the modulo correction (BI: p2577 = 1 signal) is activated and for absolute positioning (BI: p2648 = 1 signal), the traversing direction is specified as follows:
BI: p2651 / BI: p2652
0 signal / 0 signal: Absolute positioning through the shortest distance.
1 signal / 0 signal: Absolute positioning in the positive direction.
0 signal / 1 signal: Absolute positioning in the negative direction.
1 signal / 1 signal: Absolute positioning through the shortest distance.

p2652 BI: EPOS direct setpoint input/MDI direction selection negative / MDI dir_sel neg

SERVO_S110-DP (EPOS), SERVO_S110-CAN (EPOS), SERVO_S110-PN (EPOS)

Can be changed: T	**Calculated:** -	**Access level:** 1
Data type: Unsigned32 / Binary	**Dyn. index:** -	**Func. diagram:** 3620
P-Group: Basic positioner	**Unit group:** -	**Unit selection:** -
Not for motor type: -	**Scaling:** -	**Expert list:** 1
Min	**Max**	**Factory setting**
-	-	0

Description: Sets the signal source for the negative direction selection in the operating mode "direct setpoint input/MDI".

Dependency: Refer to: p2576, p2648, p2649, p2650, p2651, p2653, p2654

Note: The following applies for "setting-up":
- the traversing direction can be entered using this binector input.
- if both directions (p2651, p2652) are selected, then the axis remains stationary (zero speed).
- if both directions (p2651, p2652) are de-selected, then the axis remains stationary (zero speed).

The following applies for "positioning":
Using binector inputs p2651 and p2652, when the modulo correction (BI: p2577 = 1 signal) is activated and for absolute positioning (BI: p2648 = 1 signal), the traversing direction is specified as follows:
BI: p2651 / BI: p2652
0 signal / 0 signal: Absolute positioning through the shortest distance.
1 signal / 0 signal: Absolute positioning in the positive direction.
0 signal / 1 signal: Absolute positioning in the negative direction.
1 signal / 1 signal: Absolute positioning through the shortest distance.

p2653 BI: EPOS direct setpoint input/MDI setting-up selection / MDI setting-up sel

SERVO_S110-DP (EPOS), SERVO_S110-CAN (EPOS), SERVO_S110-PN (EPOS)

Can be changed: T	**Calculated:** -	**Access level:** 1
Data type: Unsigned32 / Binary	**Dyn. index:** -	**Func. diagram:** 3620
P-Group: Basic positioner	**Unit group:** -	**Unit selection:** -
Not for motor type: -	**Scaling:** -	**Expert list:** 1
Min	**Max**	**Factory setting**
-	-	0

Description: Sets the signal source for setting-up in the operating mode "direct setpoint input/MDI".
BI: p2653 = 1 signal
Setting-up selected.
BI: p2653 = 0 signal
Positioning selected.

Dependency: Refer to: p2651, p2652

Note: In the operating mode "direct setpoint input/MDI", it is possible to make a flying changeover between setting-up and positioning.
For "setup" (BI: p2653 = 1 signal), the following applies:
A traversing direction must be selected via binector inputs p2651 and p2652.

p2654 CI: EPOS direct setpoint input/MDI mode adaptation / MDI mode adapt

SERVO_S110-DP (EPOS), SERVO_S110-CAN (EPOS), SERVO_S110-PN (EPOS)

Can be changed: T	**Calculated:** -	**Access level:** 1
Data type: Unsigned32 / Integer16	**Dyn. index:** -	**Func. diagram:** 3620
P-Group: Basic positioner	**Unit group:** -	**Unit selection:** -
Not for motor type: -	**Scaling:** -	**Expert list:** 1
Min	**Max**	**Factory setting**
-	-	0

Description: Sets the signal source to interconnect the MDI mode to the operating mode "direct setpoint input MDI" via PROFIBUS telegram 110.
CI: p2654 = 0
The binector inputs listed below are evaluated.
CI: p2654 > 0
The following binector inputs are not evaluated:
- BI: p2648 (positioning type)
- BI: p2651 (direction selection, positive)
- BI: p2652 (direction selection, negative)
In this case, the following definitions apply:
Signal via CI: p2654 = xx0x hex -> absolute
Signal via CI: p2654 = xx1x hex -> relative
Signal via CI: p2654 = xx2x hex -> abs_pos (only for modulo correction)
Signal via CI: p2654 = xx3x hex -> abs_neg (only for modulo correction)

Dependency: Refer to: p2648, p2651, p2652

p2655[0...1] BI: EPOS select tracking mode / Sel tracking mode

SERVO_S110-DP (EPOS), SERVO_S110-CAN (EPOS), SERVO_S110-PN (EPOS)

Can be changed: T	**Calculated:** -	**Access level:** 1
Data type: Unsigned32 / Binary	**Dyn. index:** -	**Func. diagram:** 3635
P-Group: Basic positioner	**Unit group:** -	**Unit selection:** -
Not for motor type: -	**Scaling:** -	**Expert list:** 1
Min	**Max**	**Factory setting**
-	-	[0] 1 [1] 2526.7

Description: Sets the signal source to select tracking mode.
BI: p2655[0] or BI: p2655[1] = 1 signal
Tracking mode after withdrawing the enable signal from EPOS (BI: p2656 = 0 signal).
BI: p2655[0] and BI: p2655[1] = 0 signal
No tracking mode after withdrawing the enable signal from EPOS (BI: p2656 = 0 signal).

Dependency: Refer to: p2656

Notice: The parameter may be protected as a result of p0922 or p2079 and cannot be changed.

Note: For the following events, independent of the signal that is present, tracking mode is selected:
- after booting.
- after a 0/1 signal at BI: p2658 (EPOS position actual value, valid feedback signal).
- while a fault is present.

p2656 BI: EPOS enable basic positioner / EPOS enable

SERVO_S110-DP (EPOS), SERVO_S110-CAN (EPOS), SERVO_S110-PN (EPOS)

Can be changed: T	**Calculated:** -	**Access level:** 3
Data type: Unsigned32 / Binary	**Dyn. index:** -	**Func. diagram:** 3635
P-Group: Basic positioner	**Unit group:** -	**Unit selection:** -
Not for motor type: -	**Scaling:** -	**Expert list:** 1
Min	**Max**	**Factory setting**
-	-	2526.3

Description: Sets the signal source to enable the basic positioner.

BI: p2656 = 1 signal
The basic positioner is enabled.
BI: p2656 = 0 signal
The basic positioner is not enabled.

Dependency: Refer to: r2526, p2655

p2657 CI: EPOS position actual value/position setting value / Pos act/set value

SERVO_S110-DP (EPOS), SERVO_S110-CAN (EPOS), SERVO_S110-PN (EPOS)

Can be changed: T	**Calculated:** -	**Access level:** 3
Data type: Unsigned32 / Integer32	**Dyn. index:** -	**Func. diagram:** 3610, 3616, 3620, 3635
P-Group: Basic positioner	**Unit group:** -	**Unit selection:** -
Not for motor type: -	**Scaling:** -	**Expert list:** 1
Min	**Max**	**Factory setting**
-	-	2521[0]

Description: Sets the signal source for the position actual value/position setting value.

Dependency: Refer to: r2521, p2658

Note: In the tracking mode, the position setpoint is taken from this connector input.

p2658 BI: EPOS pos. actual value valid feedback signal / Pos valid feedback

SERVO_S110-DP (EPOS), SERVO_S110-CAN (EPOS), SERVO_S110-PN (EPOS)

Can be changed: T	**Calculated:** -	**Access level:** 3
Data type: Unsigned32 / Binary	**Dyn. index:** -	**Func. diagram:** 3635
P-Group: Basic positioner	**Unit group:** -	**Unit selection:** -
Not for motor type: -	**Scaling:** -	**Expert list:** 1
Min	**Max**	**Factory setting**
-	-	2526.0

Description: Sets the signal source for the feedback signal "position actual value is valid".
BI: p2658 = 1 signal
The position actual value received via CI: p2657 is valid.
BI: p2658 = 0 signal
The position actual value received via CI: p2657 is invalid.

Dependency: Refer to: r2526, p2657

Note: While a 0 signal is present, the position setpoint (p2665) is held at the value of 0.

p2659 BI: EPOS referencing active feedback signal / Ref act fdbk

SERVO_S110-DP (EPOS), SERVO_S110-CAN (EPOS), SERVO_S110-PN (EPOS)

Can be changed: T	**Calculated:** -	**Access level:** 3
Data type: Unsigned32 / Binary	**Dyn. index:** -	**Func. diagram:** 3612
P-Group: Basic positioner	**Unit group:** -	**Unit selection:** -
Not for motor type: -	**Scaling:** -	**Expert list:** 1
Min	**Max**	**Factory setting**
-	-	2526.1

Description: Sets the signal source for the feedback signal "referencing active".
BI: p2659 = 1 signal
Referencing is active.
BI: p2659 = 0 signal
Referencing is not active.

Dependency: Refer to: r2526

p2660 CI: EPOS measured value referencing / Meas val ref

SERVO_S110-DP (EPOS), SERVO_S110-CAN (EPOS), SERVO_S110-PN (EPOS)

Can be changed: T	**Calculated:** -	**Access level:** 3
Data type: Unsigned32 / Integer32	**Dyn. index:** -	**Func. diagram:** 3612, 3614
P-Group: Basic positioner	**Unit group:** -	**Unit selection:** -
Not for motor type: -	**Scaling:** -	**Expert list:** 1
Min	**Max**	**Factory setting**
-	-	2523[0]

Description: Sets the signal source for the measured value for the function "referencing".

Dependency: Refer to: r2523

p2661 BI: EPOS measured value valid feedback signal / MeasVal valid fdbk

SERVO_S110-DP (EPOS), SERVO_S110-CAN (EPOS), SERVO_S110-PN (EPOS)

Can be changed: T	**Calculated:** -	**Access level:** 3
Data type: Unsigned32 / Binary	**Dyn. index:** -	**Func. diagram:** 3612, 3614, 3615
P-Group: Basic positioner	**Unit group:** -	**Unit selection:** -
Not for motor type: -	**Scaling:** -	**Expert list:** 1
Min	**Max**	**Factory setting**
-	-	2526.2

Description: Sets the signal source for the feedback signal "measured value valid".
BI: p2661 = 1 signal
The measured value received via CI: p2660 is valid.
BI: p2661 = 0 signal
The measured value received via CI: p2660 is invalid.

Dependency: Refer to: r2526, p2660

p2662 BI: EPOS adjustment value valid feedback signal / Adj val valid FS

SERVO_S110-DP (EPOS), SERVO_S110-CAN (EPOS), SERVO_S110-PN (EPOS)

Can be changed: T	**Calculated:** -	**Access level:** 3
Data type: Unsigned32 / Binary	**Dyn. index:** -	**Func. diagram:** -
P-Group: Basic positioner	**Unit group:** -	**Unit selection:** -
Not for motor type: -	**Scaling:** -	**Expert list:** 1
Min	**Max**	**Factory setting**
-	-	2526.9

Description: Sets the signal source for the feedback signal "adjustment value valid".
BI: p2662 = 1 signal
The adjustment value received via CI: p2660 is valid.
BI: p2662 = 0 signal
The adjustment value received via CI: p2660 is not valid.

Dependency: Refer to: r2526, p2660

p2663 BI: EPOS clamping active feedback signal / Clamping active FS

SERVO_S110-DP (EPOS), SERVO_S110-CAN (EPOS), SERVO_S110-PN (EPOS)

Can be changed: T	**Calculated:** -	**Access level:** 3
Data type: Unsigned32 / Binary	**Dyn. index:** -	**Func. diagram:** 3616
P-Group: Basic positioner	**Unit group:** -	**Unit selection:** -
Not for motor type: -	**Scaling:** -	**Expert list:** 1
Min	**Max**	**Factory setting**
-	-	2526.8

Description: Sets the signal source for the feedback signal "clamping active for travel to fixed stop".
BI: p2663 = 1 signal
Clamping is active
BI: p2663 = 0 signal
Clamping is not active.

Dependency: Refer to: r2526

Note: The feedback signal from "terminals active" is, for the factory setting, dependent on the signal BO: r2526.8 (terminals active when moving to a fixed stop).

r2665 CO: EPOS position setpoint / s_set

SERVO_S110-DP (EPOS), SERVO_S110-CAN (EPOS), SERVO_S110-PN (EPOS)

Can be changed: -	**Calculated:** -	**Access level:** 1
Data type: Integer32	**Dyn. index:** -	**Func. diagram:** 3635
P-Group: Basic positioner	**Unit group:** -	**Unit selection:** -
Not for motor type: -	**Scaling:** -	**Expert list:** 1
Min	**Max**	**Factory setting**
- [LU]	- [LU]	- [LU]

Description: Displays the actual absolute position setpoint.
Dependency: Refer to: p2530
Note: As standard, the following BICO interconnection is established: CI: p2530 = r2665

r2666 CO: EPOS velocity setpoint / v_set

SERVO_S110-DP (EPOS), SERVO_S110-CAN (EPOS), SERVO_S110-PN (EPOS)

Can be changed: -	**Calculated:** -	**Access level:** 1
Data type: Integer32	**Dyn. index:** -	**Func. diagram:** 3635
P-Group: Basic positioner	**Unit group:** -	**Unit selection:** -
Not for motor type: -	**Scaling:** -	**Expert list:** 1
Min	**Max**	**Factory setting**
- [1000 LU/min]	- [1000 LU/min]	- [1000 LU/min]

Description: Displays the actual velocity setpoint.
Dependency: Refer to: p2531
Note: As standard, the following BICO interconnection is established: CI: p2531 = r2666

r2667 CO: EPOS backlash compensation value / Backlash value

SERVO_S110-DP (EPOS), SERVO_S110-CAN (EPOS), SERVO_S110-PN (EPOS)

Can be changed: -	**Calculated:** -	**Access level:** 1
Data type: Integer32	**Dyn. index:** -	**Func. diagram:** 3635
P-Group: Basic positioner	**Unit group:** -	**Unit selection:** -
Not for motor type: -	**Scaling:** -	**Expert list:** 1
Min	**Max**	**Factory setting**
- [LU]	- [LU]	- [LU]

Description: Displays the actual effective value for backlash compensation.
Dependency: Refer to: p2516
Note: As standard, the following BICO interconnection is established: CI: p2516 = r2667

r2669 CO: EPOS actual operating mode / Op mode act

SERVO_S110-DP (EPOS), SERVO_S110-CAN (EPOS), SERVO_S110-PN (EPOS)

Can be changed: -	**Calculated:** -	**Access level:** 1
Data type: Integer32	**Dyn. index:** -	**Func. diagram:** 3625, 3630
P-Group: Basic positioner	**Unit group:** -	**Unit selection:** -
Not for motor type: -	**Scaling:** -	**Expert list:** 1
Min	**Max**	**Factory setting**
-	-	-

Description: Displays the actual active operating mode.
Value = 00 hex -> no operating mode active
Value = 01 hex -> jogging active
Value = 02 hex -> search for reference active
Value = 04 hex -> traversing blocks active
Value = 08 hex -> Positioning for direct setpoint input/MDI active
Value = 10 hex -> Setting-up for direct setpoint input/MDI active
Value = 20 hex -> flying referencing active
Dependency: Refer to: p2589, p2590, p2595, p2631, p2647, p2653

r2670.0...15 CO/BO: EPOS status word active traversing block / ZSW act trav_block

SERVO_S110-DP (EPOS), SERVO_S110-CAN (EPOS), SERVO_S110-PN (EPOS)

Can be changed: -	**Calculated:** -	**Access level:** 1
Data type: Unsigned32	**Dyn. index:** -	**Func. diagram:** 3615, 3625, 3650
P-Group: Basic positioner	**Unit group:** -	**Unit selection:** -
Not for motor type: -	**Scaling:** -	**Expert list:** 1
Min	**Max**	**Factory setting**
-	-	-

Description: Displays the status word for the active traversing block.
r2670.0: Active traversing block, bit 0
...
r2670.5: Active traversing block, bit 5
r2670.15: MDI active

Bit field:

Bit	Signal name	1 signal	0 signal	FP
00	Active traversing block bit 0	Active	Not active	-
01	Active traversing block bit 1	Active	Not active	-
02	Active traversing block bit 2	Active	Not active	-
03	Active traversing block bit 3	Active	Not active	-
04	Active traversing block bit 4	Active	Not active	-
05	Active traversing block bit 5	Active	Not active	-
15	MDI active	Active	Not active	-

Dependency: Refer to: p2631, p2647

Note: Re bit 00 ... 05:
Displays the active traversing block in the traversing blocks operating mode.
Re bit 15:
For a 1 signal, the operating mode - direct setpoint input/MDI - is active

r2671 CO: EPOS actual position setpoint / s_set act

SERVO_S110-DP (EPOS), SERVO_S110-CAN (EPOS), SERVO_S110-PN (EPOS)

Can be changed: -	**Calculated:** -	**Access level:** 1
Data type: Integer32	**Dyn. index:** -	**Func. diagram:** 3610, 3616, 3620
P-Group: Basic positioner	**Unit group:** -	**Unit selection:** -
Not for motor type: -	**Scaling:** -	**Expert list:** 1
Min	**Max**	**Factory setting**
- [LU]	- [LU]	- [LU]

Description: Displays the position setpoint presently being processed.

Note: A position of 0 is displayed for non position-related tasks (e.g. ENDLESS_POS, ENDLESS_NEG).

r2672 CO: EPOS actual velocity setpoint / v_set act

SERVO_S110-DP (EPOS), SERVO_S110-CAN (EPOS), SERVO_S110-PN (EPOS)

Can be changed: -	**Calculated:** -	**Access level:** 1
Data type: Integer32	**Dyn. index:** -	**Func. diagram:** 3610, 3612, 3616, 3620
P-Group: Basic positioner	**Unit group:** -	**Unit selection:** -
Not for motor type: -	**Scaling:** -	**Expert list:** 1
Min	**Max**	**Factory setting**
- [1000 LU/min]	- [1000 LU/min]	- [1000 LU/min]

Description: Displays the velocity setpoint presently being processed.

r2673 CO: EPOS actual acceleration override / a_over act

SERVO_S110-DP (EPOS), SERVO_S110-CAN (EPOS), SERVO_S110-PN (EPOS)

Can be changed: -	**Calculated:** -	**Access level:** 1
Data type: FloatingPoint32	**Dyn. index:** -	**Func. diagram:** 3610, 3612, 3616, 3620
P-Group: Basic positioner	**Unit group:** -	**Unit selection:** -
Not for motor type: -	**Scaling:** -	**Expert list:** 1
Min	**Max**	**Factory setting**
- [%]	- [%]	- [%]

Description: Displays the acceleration override presently being processed.

Note: An override of 100% is effective in the "jogging" and "search for reference" operating modes.

r2674 CO: EPOS actual deceleration override / -a_over act

SERVO_S110-DP (EPOS), SERVO_S110-CAN (EPOS), SERVO_S110-PN (EPOS)

Can be changed: -	**Calculated:** -	**Access level:** 1
Data type: FloatingPoint32	**Dyn. index:** -	**Func. diagram:** 3610, 3612, 3616, 3620
P-Group: Basic positioner	**Unit group:** -	**Unit selection:** -
Not for motor type: -	**Scaling:** -	**Expert list:** 1
Min	**Max**	**Factory setting**
- [%]	- [%]	- [%]

Description: Displays the deceleration override presently being processed.

Note: An override of 100% is effective in the "jogging" and "search for reference" operating modes.

r2675 CO: EPOS actual task / Task act

SERVO_S110-DP (EPOS), SERVO_S110-CAN (EPOS), SERVO_S110-PN (EPOS)

Can be changed: -	**Calculated:** -	**Access level:** 1
Data type: Integer16	**Dyn. index:** -	**Func. diagram:** 3616
P-Group: Basic positioner	**Unit group:** -	**Unit selection:** -
Not for motor type: -	**Scaling:** -	**Expert list:** 1
Min	**Max**	**Factory setting**
0	9	-

Description: Displays the task that is presently being processed.

Value:
0: Inactive
1: POSITIONING
2: FIXED STOP
3: ENDLESS_POS
4: ENDLESS_NEG
5: WAITING
6: GOTO
7: SET_O
8: RESET_O
9: JERK

Dependency: Refer to: p2621

r2676 CO: EPOS actual task parameter / Task para act

SERVO_S110-DP (EPOS), SERVO_S110-CAN (EPOS), SERVO_S110-PN (EPOS)

Can be changed: -	**Calculated:** -	**Access level:** 1
Data type: Integer32	**Dyn. index:** -	**Func. diagram:** 3616
P-Group: Basic positioner	**Unit group:** -	**Unit selection:** -
Not for motor type: -	**Scaling:** -	**Expert list:** 1
Min	**Max**	**Factory setting**
-	-	-

Description: Displays the task parameter presently being processed in the "traversing blocks" operating mode.

Dependency: Refer to: p2622

Note: The following is displayed depending on the task:
FIXED STOP: Clamping torque (0 ... 65536 [0.01 Nm]) or clamping force (0 ... 65536 [N])
WAIT: Delay time [ms]
GOTO: Block number
SET_O: 1, 2, 3 --> direct output 1, 2 or 3 (both) is set
RESET_O: 1, 2, 3 --> direct output 1, 2 or 3 (both) is set
JERK: 0 --> de-activate, 1 --> activate

r2677 CO: EPOS actual task mode / Task mode act

SERVO_S110-DP (EPOS), SERVO_S110-CAN (EPOS), SERVO_S110-PN (EPOS)

Can be changed: -	**Calculated:** -	**Access level:** 1
Data type: Unsigned16	**Dyn. index:** -	**Func. diagram:** 3616
P-Group: Basic positioner	**Unit group:** -	**Unit selection:** -
Not for motor type: -	**Scaling:** -	**Expert list:** 1
Min	**Max**	**Factory setting**
-	-	-

Description: Displays the task mode presently being processed.
Dependency: Refer to: p2623

r2678 CO: EPOS external block change actual position / Ext BlckChg s_act

SERVO_S110-DP (EPOS), SERVO_S110-CAN (EPOS), SERVO_S110-PN (EPOS)

Can be changed: -	**Calculated:** -	**Access level:** 1
Data type: Integer32	**Dyn. index:** -	**Func. diagram:** 3615, 3616, 3620
P-Group: Basic positioner	**Unit group:** -	**Unit selection:** -
Not for motor type: -	**Scaling:** -	**Expert list:** 1
Min	**Max**	**Factory setting**
- [LU]	- [LU]	- [LU]

Description: Displays the actual position for the following events:
- external block change via measuring probe (p2632 = 0, BI: p2661 = 0/1 signal).
- external block change via BI: p2633 (p2632 = 1, BI: p2633 = 0/1 signal).
- activate traversing task (BI: p2631 = 0/1 signal).

Dependency: Refer to: p2631, p2632, p2633, p2661

r2680 CO: EPOS clearance reference cam and zero mark / Clearance cam/ZM

SERVO_S110-DP (EPOS), SERVO_S110-CAN (EPOS), SERVO_S110-PN (EPOS)

Can be changed: -	**Calculated:** -	**Access level:** 1
Data type: Integer32	**Dyn. index:** -	**Func. diagram:** 3612
P-Group: Basic positioner	**Unit group:** -	**Unit selection:** -
Not for motor type: -	**Scaling:** -	**Expert list:** 1
Min	**Max**	**Factory setting**
- [LU]	- [LU]	- [LU]

Description: Displays the clearance determined between the reference cam and zero mark in the search for reference.

r2681 CO: EPOS velocity override effective / v_over effective

SERVO_S110-DP (EPOS), SERVO_S110-CAN (EPOS), SERVO_S110-PN (EPOS)

Can be changed: -	**Calculated:** -	**Access level:** 1
Data type: FloatingPoint32	**Dyn. index:** -	**Func. diagram:** 3630
P-Group: Basic positioner	**Unit group:** -	**Unit selection:** -
Not for motor type: -	**Scaling:** -	**Expert list:** 1
Min	**Max**	**Factory setting**
- [%]	- [%]	- [%]

Description: Displays the actual effective velocity override.
Dependency: Refer to: p2571, p2646
Note: The effective override can differ from the specified override due to limits (e.g. p2571, maximum velocity).

r2682 CO: EPOS residual distance to go / Residual distance

SERVO_S110-DP (EPOS), SERVO_S110-CAN (EPOS), SERVO_S110-PN (EPOS)

Can be changed: -	**Calculated:** -	**Access level:** 1
Data type: Integer32	**Dyn. index:** -	**Func. diagram:** 3635
P-Group: Basic positioner	**Unit group:** -	**Unit selection:** -
Not for motor type: -	**Scaling:** -	**Expert list:** 1
Min	**Max**	**Factory setting**
- [LU]	- [LU]	- [LU]

Description: Displays the current residual distance.
The remaining distance is the distance to still to be moved through up to the end of the actual positioning task.

Dependency: Refer to: r2665, r2671, r2678

r2683.0...14 CO/BO: EPOS status word 1 / POS_ZSW1

SERVO_S110-DP (Cl-loop pos ctrl), SERVO_S110-CAN (Cl-loop pos ctrl), SERVO_S110-PN (Cl-loop pos ctrl)

Can be changed: -	**Calculated:** -	**Access level:** 1
Data type: Unsigned16	**Dyn. index:** -	**Func. diagram:** 3645
P-Group: Closed loop position control	**Unit group:** -	**Unit selection:** -
Not for motor type: -	**Scaling:** -	**Expert list:** 1
Min	**Max**	**Factory setting**
-	-	-

Description: Displays status word 1 for the basic positioner (EPOS).

Bit field:

Bit	Signal name	1 signal	0 signal	FP
00	Tracking mode active	Yes	No	3635, 4020
01	Velocity limiting active	Yes	No	3630
02	Setpoint fixed	Yes	No	3635
03	Set position reached	Yes	No	3635
04	Axis moves forward	Yes	No	3635
05	Axis moves backward	Yes	No	3635
06	Software limit switch minus reached	Yes	No	3635
07	Software limit switch plus reached	Yes	No	3635
08	Position actual value <= cam switching position 1	Yes	No	4025
09	Position actual value <= cam switching position 2	Yes	No	4025
10	Direct output 1 via traversing block	Yes	No	3616
11	Direct output 2 via traversing block	Yes	No	3616
12	Fixed stop reached	Yes	No	3616, 3617
13	Fixed stop clamping torque reached	Yes	No	3616, 3617
14	Travel to fixed stop active	Yes	No	3616, 3617

Dependency: Refer to: r2684

Note: Re bit 02, 04, 05, 06, 07:
This signals designate the state after jerk limiting.
Re bit 08, 09:
These signals are generated in the "closed-loop position control" function module.

r2684.0...15 CO/BO: EPOS status word 2 / POS_ZSW2

SERVO_S110-DP (Cl-loop pos ctrl), SERVO_S110-CAN (Cl-loop pos ctrl), SERVO_S110-PN (Cl-loop pos ctrl)

Can be changed: -	**Calculated:** -	**Access level:** 1
Data type: Unsigned16	**Dyn. index:** -	**Func. diagram:** 3646
P-Group: Closed loop position control	**Unit group:** -	**Unit selection:** -
Not for motor type: -	**Scaling:** -	**Expert list:** 1
Min	**Max**	**Factory setting**
-	-	-

Description: Displays status word 2 for the basic positioner (EPOS).

Bit field:

Bit	Signal name	1 signal	0 signal	FP
00	Search for reference active	Active	Not active	3612
01	Flying referencing active	Active	Not active	3614
02	Referencing active	Active	Not active	-
03	Printing mark outside outer window	Yes	No	3614
04	Axis accelerating	Yes	No	3635
05	Axis decelerating	Yes	No	3635
06	Jerk limiting active	Yes	No	3635
07	Activate correction	Yes	No	3635
08	Following error in tolerance	Yes	No	4025
09	Modulo correction active	Yes	No	-
10	Target position reached	Yes	No	4020
11	Reference point set	Yes	No	3612, 3614, 3630
12	Acknowledgement traversing block activated	Yes	No	3616, 3620
13	STOP cam minus active	Yes	No	3630
14	STOP cam plus active	Yes	No	3630
15	Traversing command active	Yes	No	3635

Note:
Re bit 02:
The "referencing active" signal is an OR logic operation of "search for reference active" and "flying referencing active".
Re bit 00 ... 07 and 11 ... 14:
These signals are generated in the function module "basic positioner".
Re bit 08:
The signal is generated in the "closed-loop position control" function module.

r2685 CO: EPOS corrective value / Corrective value

SERVO_S110-DP (EPOS), SERVO_S110-CAN (EPOS), SERVO_S110-PN (EPOS)

Can be changed: -	**Calculated:** -	**Access level:** 1
Data type: Integer32	**Dyn. index:** -	**Func. diagram:** 3635
P-Group: Basic positioner	**Unit group:** -	**Unit selection:** -
Not for motor type: -	**Scaling:** -	**Expert list:** 1
Min	**Max**	**Factory setting**
- [LU]	- [LU]	- [LU]

Description: Displays the corrective value for the position actual value.
Dependency: Refer to: r2684
Note: As standard, the following BICO interconnection is established: CI: p2513 = r2685
Using this value, e.g. modulo corrections are carried out.

r2686[0...1] CO: EPOS torque limiting effective / M_limit eff

SERVO_S110-DP (EPOS), SERVO_S110-CAN (EPOS), SERVO_S110-PN (EPOS)

Can be changed: -	**Calculated:** -	**Access level:** 3
Data type: FloatingPoint32	**Dyn. index:** -	**Func. diagram:** 3616, 3617
P-Group: Basic positioner	**Unit group:** -	**Unit selection:** -
Not for motor type: -	**Scaling:** -	**Expert list:** 1
Min	**Max**	**Factory setting**
- [%]	- [%]	- [%]

Description: Displays the effective torque limiting.
r2686[0]: Displays the effective upper torque limiting when traversing to fixed stop (referred to CI: p1522, CI: p1523).
r2686[1]: Displays the effective lower torque limiting when traversing to fixed stop (referred to CI: p1522, CI: p1523).
Dependency: Refer to: p1520, p1521, p1522, p1523, r2676
Note: As standard, the following BICO interconnections are established:
CI: p1528 = r2686[0]
CI: p1529 = r2686[1]

r2687 CO: EPOS torque setpoint / M_set

SERVO_S110-DP (EPOS), SERVO_S110-CAN (EPOS), SERVO_S110-PN (EPOS)

Can be changed: -	**Calculated:** -	**Access level:** 3
Data type: FloatingPoint32	**Dyn. index:** -	**Func. diagram:** 3616, 3617
P-Group: Basic positioner	**Unit group:** -	**Unit selection:** -
Not for motor type: -	**Scaling:** -	**Expert list:** 1
Min	**Max**	**Factory setting**
- [Nm]	- [Nm]	- [Nm]

Description: Displays the effective torque setpoint when reaching the fixed stop (referred to CI: p1522, CI: p1523).

Dependency: Refer to: p1520, p1521, p1522, p1523, r2676

p2690 CO: EPOS position fixed setpoint / Pos fixed value

SERVO_S110-DP (EPOS), SERVO_S110-CAN (EPOS), SERVO_S110-PN (EPOS)

Can be changed: U, T	**Calculated:** -	**Access level:** 1
Data type: Integer32	**Dyn. index:** -	**Func. diagram:** 3618
P-Group: Basic positioner	**Unit group:** -	**Unit selection:** -
Not for motor type: -	**Scaling:** -	**Expert list:** 1
Min	**Max**	**Factory setting**
-2147482648 [LU]	2147482647 [LU]	0 [LU]

Description: Sets a fixed setpoint for the position.

Dependency: Refer to: p2642, p2648

Note: As standard, the following BICO interconnection is established: CI: p2642 = r2690

p2691 CO: EPOS velocity fixed setpoint / v fixed value

SERVO_S110-DP (EPOS), SERVO_S110-CAN (EPOS), SERVO_S110-PN (EPOS)

Can be changed: U, T	**Calculated:** -	**Access level:** 1
Data type: Unsigned32	**Dyn. index:** -	**Func. diagram:** 3618
P-Group: Basic positioner	**Unit group:** -	**Unit selection:** -
Not for motor type: -	**Scaling:** -	**Expert list:** 1
Min	**Max**	**Factory setting**
1 [1000 LU/min]	40000000 [1000 LU/min]	600 [1000 LU/min]

Description: Sets a fixed setpoint for the velocity.

Dependency: Refer to: p2643

Note: As standard, the following BICO interconnection is established: CI: p2643 = r2691

p2692 CO: EPOS acceleration override, fixed setpoint / a_over fixed val

SERVO_S110-DP (EPOS), SERVO_S110-CAN (EPOS), SERVO_S110-PN (EPOS)

Can be changed: U, T	**Calculated:** -	**Access level:** 1
Data type: FloatingPoint32	**Dyn. index:** -	**Func. diagram:** 3618
P-Group: Basic positioner	**Unit group:** -	**Unit selection:** -
Not for motor type: -	**Scaling:** -	**Expert list:** 1
Min	**Max**	**Factory setting**
0.100 [%]	100.000 [%]	100.000 [%]

Description: Sets a fixed setpoint for the acceleration override.

Dependency: Refer to: p2572, p2644

Note: As standard, the following BICO interconnection is established: CI: p2644 = r2692
The percentage value refers to the maximum acceleration (p2572).

p2693 CO: EPOS deceleration override, fixed setpoint / -a_over fixed val

SERVO_S110-DP (EPOS), SERVO_S110-CAN (EPOS), SERVO_S110-PN (EPOS)

Can be changed: U, T	**Calculated:** -	**Access level:** 1
Data type: FloatingPoint32	**Dyn. index:** -	**Func. diagram:** 3618
P-Group: Basic positioner	**Unit group:** -	**Unit selection:** -
Not for motor type: -	**Scaling:** -	**Expert list:** 1
Min	**Max**	**Factory setting**
0.100 [%]	100.000 [%]	100.000 [%]

Description: Sets a fixed setpoint for the deceleration override.

Dependency: Refer to: p2573, p2645

Note: As standard, the following BICO interconnection is established: CI: p2645 = r2693

The percentage value refers to the maximum deceleration (p2573).

r2700 CO: Reference speed/reference frequency / n_ref/f_ref

SERVO_S110-DP, SERVO_S110-CAN, SERVO_S110-PN

Can be changed: -	**Calculated:** -	**Access level:** 2
Data type: FloatingPoint32	**Dyn. index:** -	**Func. diagram:** -
P-Group: -	**Unit group:** -	**Unit selection:** -
Not for motor type: -	**Scaling:** -	**Expert list:** 1
Min	**Max**	**Factory setting**
-	-	-

Description: Display and connector output for the reference quantity for speed and frequency (p2000).

All speeds or frequencies specified as relative value are referred to this reference quantity.

The reference quantity in this parameter corresponds to 100% or 4000 hex or 4000 0000 hex.

The following applies: Reference frequency (in Hz) = reference speed (in rpm) / 60

This parameter has the unit rpm.

Dependency: Refer to: p2000

Note: This parameter provides the numerical value of the reference quantity p2000 as a connector output for interconnection with Drive Control Chart (DCC). The numerical value can be adopted unchanged from this connector output in DCC.

r2701 CO: Reference voltage / Reference voltage

SERVO_S110-DP, SERVO_S110-CAN, SERVO_S110-PN

Can be changed: -	**Calculated:** -	**Access level:** 3
Data type: FloatingPoint32	**Dyn. index:** -	**Func. diagram:** -
P-Group: -	**Unit group:** -	**Unit selection:** -
Not for motor type: -	**Scaling:** -	**Expert list:** 1
Min	**Max**	**Factory setting**
-	-	-

Description: Connector output of the reference quantity for voltages p2001.

All voltages specified as relative value are referred to this reference quantity. The reference quantity in this parameter corresponds to 100% or 4000 hex or 4000 0000 hex.

This parameter has the unit Vrms.

Dependency: Refer to: p2001

Note: This parameter provides the numerical value of the reference quantity p2001 as a connector output for interconnection with Drive Control Chart (DCC). The numerical value can be adopted unchanged from this connector output in DCC.

r2702 CO: Reference current / Reference current

SERVO_S110-DP, SERVO_S110-CAN, SERVO_S110-PN

Can be changed: -	**Calculated:** -	**Access level:** 3
Data type: FloatingPoint32	**Dyn. index:** -	**Func. diagram:** -
P-Group: -	**Unit group:** -	**Unit selection:** -
Not for motor type: -	**Scaling:** -	**Expert list:** 1
Min	**Max**	**Factory setting**
-	-	-

Description: Connector output of the reference quantity for currents p2002.

All currents specified as relative value are referred to this reference quantity. The reference quantity in this parameter corresponds to 100% or 4000 hex or 4000 0000 hex.

This parameter has the unit Arms.

Dependency: Refer to: p2002

Note: This parameter provides the numerical value of the reference quantity p2002 as a connector output for interconnection with Drive Control Chart (DCC). The numerical value can be adopted unchanged from this connector output in DCC.

r2703 CO: Reference torque / Reference torque

SERVO_S110-DP, SERVO_S110-CAN, SERVO_S110-PN

Can be changed: -	**Calculated:** -	**Access level:** 3
Data type: FloatingPoint32	**Dyn. index:** -	**Func. diagram:** -
P-Group: -	**Unit group:** -	**Unit selection:** -
Not for motor type: -	**Scaling:** -	**Expert list:** 1
Min	**Max**	**Factory setting**
-	-	-

Description: Connector output of the reference quantity p2003 for torque (r0108.12 = 0) or force (r0108.12 = 1).

All torques specified as relative values (r0108.12 = 0) or forces (r0108.12 = 1) are referred to this reference quantity. The reference quantity in this parameter corresponds to 100% or 4000 hex or 4000 0000 hex.

The unit of this parameter is the same as the unit selected for p2003.

Dependency: p0505, r0108.12

Refer to: p2003

Note: This parameter provides the numerical value of the reference quantity p2003 in the currently selected unit as a connector output for interconnection with Drive Control Chart (DCC). The numerical value can be adopted unchanged from this connector output in DCC.

r2704 CO: Reference power / Reference power

SERVO_S110-DP, SERVO_S110-CAN, SERVO_S110-PN

Can be changed: -	**Calculated:** -	**Access level:** 3
Data type: FloatingPoint32	**Dyn. index:** -	**Func. diagram:** -
P-Group: -	**Unit group:** -	**Unit selection:** -
Not for motor type: -	**Scaling:** -	**Expert list:** 1
Min	**Max**	**Factory setting**
-	-	-

Description: Connector output of the reference quantity for powers p2004.

All power ratings specified as relative value are referred to this reference quantity. The reference quantity in this parameter corresponds to 100% or 4000 hex or 4000 0000 hex.

The unit of this parameter is the same as the unit selected for p2004.

Dependency: This value is calculated as voltage x current for the infeed and as torque x speed for closed-loop controls.

Refer to: r2004

Note: This parameter provides the numerical value of the reference quantity p2004 in the currently selected unit as a connector output for interconnection with Drive Control Chart (DCC). The numerical value can be adopted unchanged from this connector output in DCC.

The reference power is calculated as follows:

- 2 * Pi * reference speed / 60 * reference torque (motor)
- reference voltage * reference current * root(3) (infeed)

r2705 CO: Reference angle / Reference angle

SERVO_S110-DP, SERVO_S110-CAN, SERVO_S110-PN

Can be changed: -	**Calculated:** -	**Access level:** 3
Data type: FloatingPoint32	**Dyn. index:** -	**Func. diagram:** -
P-Group: -	**Unit group:** -	**Unit selection:** -
Not for motor type: -	**Scaling:** -	**Expert list:** 1
Min	**Max**	**Factory setting**
-	-	-

Description: Connector output of the reference quantity for angles p2005.

All angles specified as relative value are referred to this reference quantity. The reference quantity in this parameter corresponds to 100% or 4000 hex or 4000 0000 hex.

This parameter has the unit degree.

Dependency: Refer to: p2005

Note: This parameter provides the numerical value of the reference quantity p2005 as a connector output for interconnection with Drive Control Chart (DCC). The numerical value can be adopted unchanged from this connector output in DCC.

r2706 CO: Reference temp / Reference temp

SERVO_S110-DP, SERVO_S110-CAN, SERVO_S110-PN

Can be changed: -	**Calculated:** -	**Access level:** 3
Data type: FloatingPoint32	**Dyn. index:** -	**Func. diagram:** -
P-Group: -	**Unit group:** -	**Unit selection:** -
Not for motor type: -	**Scaling:** -	**Expert list:** 1
Min	**Max**	**Factory setting**
-	-	-

Description: Connector output of the reference quantity for temperatures.

All temperatures specified as relative value are referred to this reference quantity. The reference quantity in this parameter corresponds to 100% or 4000 hex or 4000 0000 hex.

This parameter has the unit degree Celsius.

Note: This parameter provides the numerical value of the reference quantity for the temperature as a connector output for interconnection with Drive Control Chart (DCC). The numerical value can be adopted unchanged from this connector output in DCC.

r2707 CO: Reference acceleration / Ref accel

SERVO_S110-DP, SERVO_S110-CAN, SERVO_S110-PN

Can be changed: -	**Calculated:** -	**Access level:** 3
Data type: FloatingPoint32	**Dyn. index:** -	**Func. diagram:** -
P-Group: -	**Unit group:** -	**Unit selection:** -
Not for motor type: -	**Scaling:** -	**Expert list:** 1
Min	**Max**	**Factory setting**
-	-	-

Description: Connector output of the reference quantity for accelerations p2007.

All acceleration rates specified as relative value are referred to this reference quantity. The reference quantity in this parameter corresponds to 100% or 4000 hex or 4000 0000 hex.

The unit of this parameter is the same as the unit selected for p2007.

Dependency: r0108.12, p0505

Refer to: p2007

Note: This parameter provides the numerical value of the reference quantity p2007 as a connector output for interconnection with Drive Control Chart (DCC). The numerical value in the currently selected unit can be adopted unchanged from this connector output in DCC.

p2720[0...n] Load gear configuration / Load gear config

SERVO_S110-DP, SERVO_S110-CAN, SERVO_S110-PN

Can be changed: C2(1, 4)	**Calculated:** -	**Access level:** 1
Data type: Unsigned32	**Dyn. index:** DDS, p0180	**Func. diagram:** -
P-Group: Encoder	**Unit group:** -	**Unit selection:** -
Not for motor type: -	**Scaling:** -	**Expert list:** 1
Min	**Max**	**Factory setting**
-	-	0000 bin

Description: Sets the configuration for position tracking of a load gear.

Bit field:

Bit	Signal name	1 signal	0 signal	FP
00	Load gear activate position tracking	Yes	No	-
01	Axis type	Linear axis	Rotary axis	-
02	Load gear reset position	Yes	No	-

Note: For the following events, the non-volatile, saved position values are automatically reset:

- when an encoder replacement has been identified.
- when changing the configuration of the Encoder Data Set (EDS).
- when adjusting the absolute encoder again

p2721[0...n] Load gear rotary absolute encoder revolutions virtual / Abs rot rev

SERVO_S110-DP, SERVO_S110-CAN, SERVO_S110-PN

Can be changed: C2(1, 4)	**Calculated:** -	**Access level:** 1
Data type: Unsigned32	**Dyn. index:** DDS, p0180	**Func. diagram:** -
P-Group: Encoder	**Unit group:** -	**Unit selection:** -
Not for motor type: -	**Scaling:** -	**Expert list:** 1
Min	**Max**	**Factory setting**
0	4194303	0

Description: Sets the number of rotations that can be resolved for a rotary absolute encoder with activated position tracking of the load gear.

Dependency: This parameter is only of significance for an absolute encoder (p0404.1 = 1) with activated position tracking of the load gear (p2720.0 = 1).

Note: The resolution that is set must be able to be represented using r2723.

For rotary axes/modulo axes, the following applies:

This parameter is pre-set with p0421 and can be changed.

For linear axes, the following applies:

This parameter is pre-assigned with p0421, expanded by 6 bits for multiturn information (maximum number of overflows) and cannot be changed.

p2722[0...n] Load gear position tracking tolerance window / Pos track tol

SERVO_S110-DP, SERVO_S110-CAN, SERVO_S110-PN

Can be changed: C2(1, 4)	**Calculated:** -	**Access level:** 3
Data type: FloatingPoint32	**Dyn. index:** DDS, p0180	**Func. diagram:** -
P-Group: Encoder	**Unit group:** -	**Unit selection:** -
Not for motor type: -	**Scaling:** -	**Expert list:** 1
Min	**Max**	**Factory setting**
0.00	4294967300.00	0.00

Description: Sets a tolerance window for position tracking.

After the system is powered up, the difference between the saved position and the actual position is determined, and depending on this, the following is initiated:

Difference within the tolerance window --> The position is reproduced as a result of the encoder actual value.

Difference outside the tolerance window --> An appropriate message is output.

Dependency: Refer to: F07449

Caution: Rotation, e.g. through a complete encoder range is not detected.

Note: The value is entered in integer (complete) encoder pulses.

For p2720.0 = 1, the value is automatically pre-assigned quarter of the encoder range.

Example:

Quarter of the encoder range = (p0408 * p0421) / 4

It is possible that the tolerance window may not be able to be precisely set due to the data type (floating point number with 23 bit mantissa).

r2723[0...n] CO: Load gear absolute value / Load gear abs_val

SERVO_S110-DP, SERVO_S110-CAN, SERVO_S110-PN

Can be changed: -	**Calculated:** -	**Access level:** 1
Data type: Unsigned32	**Dyn. index:** DDS, p0180	**Func. diagram:** 4010, 4704
P-Group: Encoder	**Unit group:** -	**Unit selection:** -
Not for motor type: -	**Scaling:** -	**Expert list:** 1
Min	**Max**	**Factory setting**
-	-	-

Description: Displays the absolute value after the load gear.

Notice: The encoder position actual value must be requested using the encoder control word Gn_STW.13.

Note: The increments are displayed in the format the same as r0483.

r2724[0...n] CO: Load gear position difference / Load gear pos diff

SERVO_S110-DP, SERVO_S110-CAN, SERVO_S110-PN

Can be changed: -	**Calculated:** -	**Access level:** 1
Data type: Integer32	**Dyn. index:** DDS, p0180	**Func. diagram:** -
P-Group: Encoder	**Unit group:** -	**Unit selection:** -
Not for motor type: -	**Scaling:** -	**Expert list:** 1
Min	**Max**	**Factory setting**
-	-	-

Description: Displays the position difference before the load gear between powering down and powering up.

Note: The increments are displayed in the same format as for r0483/r2723.

If the measuring gear of the motor encoder is not activated, the position difference should be read in encoder increments.

If the measuring gear of the motor encoder is activated, the position difference is converted using the measuring gear factor.

p2730[0...3] BI: LR pos. actual value preprocessing activate neg. corr. (edge) / ActV_prep neg corr

SERVO_S110-DP (CI-loop pos ctrl), SERVO_S110-CAN (CI-loop pos ctrl), SERVO_S110-PN (CI-loop pos ctrl)

Can be changed: T	**Calculated:** -	**Access level:** 1
Data type: Unsigned32 / Binary	**Dyn. index:** -	**Func. diagram:** 4010, 4015
P-Group: Closed loop position control	**Unit group:** -	**Unit selection:** -
Not for motor type: -	**Scaling:** -	**Expert list:** 1
Min	**Max**	**Factory setting**
-	-	0

Description: Sets the signal source for the function "activate position actual value preprocessing, negative corrective value (edge)".

0/1 signal:

The correction value available via CI: p2513 is negated and activated.

Index: [0] = Closed-loop position control
[1] = Encoder 1
[2] = Encoder 2
[3] = Reserved

Dependency: Refer to: p2502, p2513, r2684

Note: When the pulse/direction interface is activated in position control (p0184 > 0 and p0400 = 9000) the following BICO interconnections are established:

BI:p2730[0] = r0722.2 and BI: p2730[p0184] = r0722.2

p2810[0...1] BI: AND logic operation inputs / AND inputs

SERVO_S110-DP, SERVO_S110-CAN, SERVO_S110-PN

Can be changed: T	**Calculated:** -	**Access level:** 2
Data type: Unsigned32 / Binary	**Dyn. index:** -	**Func. diagram:** 2634
P-Group: Functions	**Unit group:** -	**Unit selection:** -
Not for motor type: -	**Scaling:** -	**Expert list:** 1
Min	**Max**	**Factory setting**
-	-	0

Description: Sets the signal sources for the inputs of the AND logic operation.

Dependency: Refer to: r2811

Note: [0]: AND logic operation, input 1 --> the result is displayed in r2811.0.

[1]: AND logic operation, input 2 --> the result is displayed in r2811.0.

r2811.0 CO/BO: AND logic operation result / AND result

SERVO_S110-DP, SERVO_S110-CAN, SERVO_S110-PN

Can be changed: -	**Calculated:** -	**Access level:** 2
Data type: Unsigned32	**Dyn. index:** -	**Func. diagram:** 2634
P-Group: Functions	**Unit group:** -	**Unit selection:** -
Not for motor type: -	**Scaling:** -	**Expert list:** 1
Min	**Max**	**Factory setting**
-	-	-

Description: Displays the result of the AND logic operation

Bit field:

Bit	Signal name	1 signal	0 signal	FP
00	AND logic operation result	Yes	No	-

Dependency: Refer to: p2810

p2816[0...1] BI: OR logic operation inputs / OR inputs

SERVO_S110-DP, SERVO_S110-CAN, SERVO_S110-PN

Can be changed: T	**Calculated:** -	**Access level:** 2
Data type: Unsigned32 / Binary	**Dyn. index:** -	**Func. diagram:** 2634
P-Group: Functions	**Unit group:** -	**Unit selection:** -
Not for motor type: -	**Scaling:** -	**Expert list:** 1
Min	**Max**	**Factory setting**
-	-	0

Description: Sets the signal sources for the inputs of the OR logic operation.

Dependency: Refer to: r2817

Note: [0]: OR logic operation, input 1 --> the result is displayed in r2817.0.
[1]: OR logic operation, input 2 --> the result is displayed in r2817.0.

r2817.0 CO/BO: OR logic operation result / OR result

SERVO_S110-DP, SERVO_S110-CAN, SERVO_S110-PN

Can be changed: -	**Calculated:** -	**Access level:** 2
Data type: Unsigned32	**Dyn. index:** -	**Func. diagram:** 2634
P-Group: Functions	**Unit group:** -	**Unit selection:** -
Not for motor type: -	**Scaling:** -	**Expert list:** 1
Min	**Max**	**Factory setting**
-	-	-

Description: Displays the result of the OR logic operation.

Bit field:

Bit	Signal name	1 signal	0 signal	FP
00	OR logic operation result	Yes	No	-

Dependency: Refer to: p2816

p2900[0...n] CO: Fixed value 1 [%] / Fixed value 1 [%]

SERVO_S110-DP, SERVO_S110-CAN, SERVO_S110-PN

Can be changed: U, T	**Calculated:** -	**Access level:** 3
Data type: FloatingPoint32	**Dyn. index:** DDS, p0180	**Func. diagram:** 1021
P-Group: Free function blocks	**Unit group:** -	**Unit selection:** -
Not for motor type: -	**Scaling:** PERCENT	**Expert list:** 1
Min	**Max**	**Factory setting**
-10000.00 [%]	10000.00 [%]	0.00 [%]

Description: Sets a fixed percentage.

Dependency: Refer to: p2901, p2930

Notice: A BICO interconnection to a parameter that belongs to a drive data set always acts on the effective data set.

Note: The value can be used to interconnect a scaling function (e.g. scaling of the main setpoint)

p2901[0...n] CO: Fixed value 2 [%] / Fixed value 2 [%]

SERVO_S110-DP, SERVO_S110-CAN, SERVO_S110-PN

Can be changed: U, T	**Calculated:** -	**Access level:** 3
Data type: FloatingPoint32	**Dyn. index:** DDS, p0180	**Func. diagram:** 1021
P-Group: Free function blocks	**Unit group:** -	**Unit selection:** -
Not for motor type: -	**Scaling:** PERCENT	**Expert list:** 1
Min	**Max**	**Factory setting**
-10000.00 [%]	10000.00 [%]	0.00 [%]

Description: Sets a fixed percentage.
Dependency: Refer to: p2900, p2930
Notice: A BICO interconnection to a parameter that belongs to a drive data set always acts on the effective data set.
Note: The value can be used to interconnect a scaling function (e.g. scaling of the supplementary setpoint)

r2902[0...14] CO: Fixed values [%] / Fixed values [%]

SERVO_S110-DP, SERVO_S110-CAN, SERVO_S110-PN

Can be changed: -	**Calculated:** -	**Access level:** 1
Data type: FloatingPoint32	**Dyn. index:** -	**Func. diagram:** 1021
P-Group: Free function blocks	**Unit group:** -	**Unit selection:** -
Not for motor type: -	**Scaling:** PERCENT	**Expert list:** 1
Min	**Max**	**Factory setting**
- [%]	- [%]	- [%]

Description: Signal sources for frequently used percentage values.
Index:
[0] = Fixed value +0 %
[1] = Fixed value +5 %
[2] = Fixed value +10 %
[3] = Fixed value +20 %
[4] = Fixed value +50 %
[5] = Fixed value +100 %
[6] = Fixed value +150 %
[7] = Fixed value +200 %
[8] = Fixed value -5 %
[9] = Fixed value -10 %
[10] = Fixed value -20 %
[11] = Fixed value -50 %
[12] = Fixed value -100 %
[13] = Fixed value -150 %
[14] = Fixed value -200 %
Dependency: Refer to: p2900, p2901, p2930
Note: The signal sources can, for example, be used to interconnect scalings.

p2930[0...n] CO: Fixed value M [Nm] / Fixed value M [Nm]

SERVO_S110-DP, SERVO_S110-CAN, SERVO_S110-PN

Can be changed: U, T	**Calculated:** -	**Access level:** 3
Data type: FloatingPoint32	**Dyn. index:** DDS, p0180	**Func. diagram:** 1021
P-Group: Free function blocks	**Unit group:** 7_1	**Unit selection:** p0505
Not for motor type: REL	**Scaling:** p2003	**Expert list:** 1
Min	**Max**	**Factory setting**
-100000.00 [Nm]	100000.00 [Nm]	0.00 [Nm]

Description: Sets a fixed value for torque.
Dependency: Refer to: p2900, p2901
Notice: A BICO interconnection to a parameter that belongs to a drive data set always acts on the effective data set.
Note: The value can, for example, be used to interconnect a supplementary torque.

p3016 MotId torque constant identified / kT ident

SERVO_S110-DP, SERVO_S110-CAN, SERVO_S110-PN

Can be changed: U, T	**Calculated:** CALC_MOD_ALL	**Access level:** 3
Data type: FloatingPoint32	**Dyn. index:** -	**Func. diagram:** -
P-Group: Motor identification	**Unit group:** 28_1	**Unit selection:** p0100
Not for motor type: ASM, REL, FEM	**Scaling:** -	**Expert list:** 1
Min	**Max**	**Factory setting**
0.00 [Nm/A]	100.00 [Nm/A]	0.00 [Nm/A]

Description: Torque constant for the synchronous motor determined by the motor data identification.
This torque constant can be changed after the identification and accepted in p0316 with p1910/p1960 = -3.

Dependency: Refer to: p0316, r0334, r1937, p1960

p3017 MotId voltage constant identified / kE ident

SERVO_S110-DP, SERVO_S110-CAN, SERVO_S110-PN

Can be changed: U, T	**Calculated:** CALC_MOD_ALL	**Access level:** 3
Data type: FloatingPoint32	**Dyn. index:** -	**Func. diagram:** -
P-Group: Motor identification	**Unit group:** -	**Unit selection:** -
Not for motor type: ASM, REL, FEM	**Scaling:** -	**Expert list:** 1
Min	**Max**	**Factory setting**
0.0 [Vrms]	10000.0 [Vrms]	0.0 [Vrms]

Description: Voltage constant for a synchronous motor determined by the motor data identification.
This voltage constant can be changed after the identification and accepted in p0317 with p1910/p1960 = -3.
Units for rotating synchronous motors: Vrms/(1000 rpm), phase-to-phase

Dependency: Refer to: r1938, p1960

p3020 MotId magnetizing current identified / I_mag ident

SERVO_S110-DP, SERVO_S110-CAN, SERVO_S110-PN

Can be changed: U, T	**Calculated:** CALC_MOD_ALL	**Access level:** 3
Data type: FloatingPoint32	**Dyn. index:** -	**Func. diagram:** -
P-Group: Motor identification	**Unit group:** -	**Unit selection:** -
Not for motor type: REL, FEM	**Scaling:** -	**Expert list:** 1
Min	**Max**	**Factory setting**
0.000 [Arms]	5000.000 [Arms]	0.000 [Arms]

Description: Magnetizing current for an induction motor determined by the motor data identification.
This magnetizing current can be changed after the identification and accepted in p0320 with p1910/p1960 = -3.

Dependency: Refer to: p0320, r0331, p1910, r1948, p1960

p3027 MotId optimum load angle identified / phi_load opt ident

SERVO_S110-DP, SERVO_S110-CAN, SERVO_S110-PN

Can be changed: U, T	**Calculated:** CALC_MOD_ALL	**Access level:** 3
Data type: FloatingPoint32	**Dyn. index:** -	**Func. diagram:** -
P-Group: Motor identification	**Unit group:** -	**Unit selection:** -
Not for motor type: ASM, REL, FEM	**Scaling:** -	**Expert list:** 1
Min	**Max**	**Factory setting**
0.0 [°]	135.0 [°]	0.0 [°]

Description: Optimum load angle for a synchronous motor determined by the motor data identification.
This optimum load angle can be changed after the identification and accepted in p0327 with p1910/p1960 = -3.

Dependency: Refer to: p0327, r1947, p1960

p3028 MotId reluctance torque constant identified / kT_reluct ident

SERVO_S110-DP, SERVO_S110-CAN, SERVO_S110-PN

Can be changed: U, T	**Calculated:** CALC_MOD_ALL	**Access level:** 3
Data type: FloatingPoint32	**Dyn. index:** -	**Func. diagram:** -
P-Group: Motor identification	**Unit group:** -	**Unit selection:** -
Not for motor type: ASM, REL, FEM	**Scaling:** -	**Expert list:** 1
Min	**Max**	**Factory setting**
-1000.00 [mH]	1000.00 [mH]	0.00 [mH]

Description: Reluctance torque constant for a synchronous motor determined by the motor data identification.
This reluctance torque constant can be changed after the identification and accepted in p0328 with p1910/p1960 = -3.

Dependency: Refer to: p0328, r1939, p1960

p3030 MotId angular commutation offset identified / Ang_com offset

SERVO_S110-DP, SERVO_S110-CAN, SERVO_S110-PN

Can be changed: U, T	**Calculated:** CALC_MOD_ALL	**Access level:** 3
Data type: FloatingPoint32	**Dyn. index:** -	**Func. diagram:** -
P-Group: Motor identification	**Unit group:** -	**Unit selection:** -
Not for motor type: -	**Scaling:** -	**Expert list:** 1
Min	**Max**	**Factory setting**
-180.00 [°]	180.00 [°]	0.00 [°]

Description: Angular commutation offset for a synchronous motor determined by the motor data identification.
This angular commutation offset can be changed after the identification and accepted in p0431 with p1910/p1960 = -3.

Dependency: Refer to: p0431, p1910, p1960, r1984

p3031 MotId encoder inversion actual value identified / EncInvActVal ident

SERVO_S110-DP, SERVO_S110-CAN, SERVO_S110-PN

Can be changed: U, T	**Calculated:** CALC_MOD_ALL	**Access level:** 3
Data type: Unsigned16	**Dyn. index:** -	**Func. diagram:** -
P-Group: Motor identification	**Unit group:** -	**Unit selection:** -
Not for motor type: -	**Scaling:** -	**Expert list:** 1
Min	**Max**	**Factory setting**
-	-	0000 bin

Description: Inversion of the encoder actual value determined by the motor data identification.
This inversion can be changed after the identification and accepted in p0410 with p1910/p1960 = -3.

Bit field:

Bit	Signal name	1 signal	0 signal	FP
00	Invert speed actual value	Yes	No	4710, 4715
01	Invert position actual value	Yes	No	4704

Dependency: Refer to: p0410, p1910, p1960

p3041 MotId moment of inertia identified / M_inertia ident

SERVO_S110-DP, SERVO_S110-CAN, SERVO_S110-PN

Can be changed: U, T	**Calculated:** CALC_MOD_ALL	**Access level:** 3
Data type: FloatingPoint32	**Dyn. index:** -	**Func. diagram:** -
P-Group: Motor identification	**Unit group:** 25_1	**Unit selection:** p0100
Not for motor type: REL	**Scaling:** -	**Expert list:** 1
Min	**Max**	**Factory setting**
0.000000 [kgm²]	100000.000000 [kgm²]	0.000000 [kgm²]

Description: Motor moment of inertia determined by the motor data identification.
This motor moment of inertia can be changed after the identification and accepted in p0341 with p1910/p1960 = -3.

Dependency: Refer to: p0341, p1960, r1969

p3042 MotId load moment of inertia identified / Load mom ident

SERVO_S110-DP, SERVO_S110-CAN, SERVO_S110-PN

Can be changed: U, T	**Calculated:** CALC_MOD_ALL	**Access level:** 3
Data type: FloatingPoint32	**Dyn. index:** -	**Func. diagram:** -
P-Group: Motor identification	**Unit group:** 25_1	**Unit selection:** p0100
Not for motor type: -	**Scaling:** -	**Expert list:** 1
Min	**Max**	**Factory setting**
0.00000 [kgm²]	100000.00000 [kgm²]	0.00000 [kgm²]

Description: Load moment of inertia determined by the motor data identification.
This load moment of inertia can be changed after the identification and accepted in p1498 with p1910/p1960 = -3.

Dependency: Refer to: p0342, p1498, p1960, r1969

Note: For p1910/p1960 = -3, p0342 is set to 1 (ratio between the total and motor).

p3049[0...n] MotId Speed at start of field weakening identified / ident

SERVO_S110-DP, SERVO_S110-CAN, SERVO_S110-PN

Can be changed: U, T	**Calculated:** CALC_MOD_ALL	**Access level:** 3
Data type: FloatingPoint32	**Dyn. index:** MDS, p0130	**Func. diagram:** -
P-Group: Motor identification	**Unit group:** -	**Unit selection:** -
Not for motor type: -	**Scaling:** -	**Expert list:** 1
Min	**Max**	**Factory setting**
0.00000 [rpm]	210000.00000 [rpm]	0.00000 [rpm]

Description: Speed at the start of field weakening determined by the motor data identification.
This start speed can be changed after the identification and accepted in p0348 with p1910/p1960 = -3.

Dependency: Refer to: p0348, p1910, p1960

p3050[0...n] MotorId stator resistance identified / R_stator ident

SERVO_S110-DP, SERVO_S110-CAN, SERVO_S110-PN

Can be changed: U, T	**Calculated:** CALC_MOD_ALL	**Access level:** 3
Data type: FloatingPoint32	**Dyn. index:** MDS, p0130	**Func. diagram:** -
P-Group: Motor identification	**Unit group:** 16_1	**Unit selection:** p0349
Not for motor type: -	**Scaling:** -	**Expert list:** 1
Min	**Max**	**Factory setting**
0.00000 [ohm]	2000.00000 [ohm]	0.00000 [ohm]

Description: Stator resistance determined by the motor data identification.
This stator resistance can be changed after the identification and accepted in p0350 with p1910/p1960 = -3.

Dependency: Refer to: p0350, p1910, r1912

p3054[0...n] MotId rotor resistance identified / R_rotor ident

SERVO_S110-DP, SERVO_S110-CAN, SERVO_S110-PN

Can be changed: U, T	**Calculated:** CALC_MOD_ALL	**Access level:** 3
Data type: FloatingPoint32	**Dyn. index:** MDS, p0130	**Func. diagram:** -
P-Group: Motor identification	**Unit group:** 16_1	**Unit selection:** p0349
Not for motor type: PMSM, REL	**Scaling:** -	**Expert list:** 1
Min	**Max**	**Factory setting**
0.00000 [ohm]	300.00000 [ohm]	0.00000 [ohm]

Description: Rotor resistance for an induction motor determined by the motor data identification.
This stator resistance can be changed after the identification and accepted in p0354 with p1910/p1960 = -3.

Dependency: Refer to: p0354, p0625, p1910, r1927, p1960

Note: The parameter is not used for synchronous motors (p0300 = 2xx).

p3056[0...n] MotId stator leakage inductance identified / L_stator leak

SERVO_S110-DP, SERVO_S110-CAN, SERVO_S110-PN

Can be changed: U, T	**Calculated:** CALC_MOD_ALL	**Access level:** 3
Data type: FloatingPoint32	**Dyn. index:** MDS, p0130	**Func. diagram:** -
P-Group: Motor identification	**Unit group:** 15_1	**Unit selection:** p0349
Not for motor type: -	**Scaling:** -	**Expert list:** 1
Min	**Max**	**Factory setting**
0.00000 [mH]	1000.00000 [mH]	0.00000 [mH]

Description: Stator leakage inductance determined by the motor data identification.
This stator leakage inductance can be changed after the identification and accepted in p0356 with p1910/p1960 = -3.

Dependency: Refer to: p0356, p1910, r1932

p3058[0...n] MotId rotor leakage inductance identified / L_rotor leak

SERVO_S110-DP, SERVO_S110-CAN, SERVO_S110-PN

Can be changed: U, T	**Calculated:** CALC_MOD_ALL	**Access level:** 3
Data type: FloatingPoint32	**Dyn. index:** MDS, p0130	**Func. diagram:** -
P-Group: Motor identification	**Unit group:** 15_1	**Unit selection:** p0349
Not for motor type: PMSM, REL	**Scaling:** -	**Expert list:** 1
Min	**Max**	**Factory setting**
0.00000 [mH]	1000.00000 [mH]	0.00000 [mH]

Description: Rotor leakage induction for an induction motor determined by the motor data identification.
This rotor leakage inductance can be changed after the identification and accepted in p0358 with p1910/p1960 = -3.

Dependency: Refer to: p0358, p1910, r1932

p3060[0...n] MotId magnetizing inductance identified / MotId Lh ident

SERVO_S110-DP, SERVO_S110-CAN, SERVO_S110-PN

Can be changed: U, T	**Calculated:** CALC_MOD_ALL	**Access level:** 3
Data type: FloatingPoint32	**Dyn. index:** MDS, p0130	**Func. diagram:** -
P-Group: Motor identification	**Unit group:** 15_1	**Unit selection:** p0349
Not for motor type: PMSM, REL	**Scaling:** -	**Expert list:** 1
Min	**Max**	**Factory setting**
0.00000 [mH]	10000.00000 [mH]	0.00000 [mH]

Description: Magnetizing inductance for an induction motor determined by the motor data identification.
This magnetizing inductance can be changed after the identification and accepted in p0360 with p1910/p1960 = -3.

Dependency: Refer to: p0360, p1910, r1936, p1960

p3080 MotId flux controller P gain identified / Flux ctrl Kp ident

SERVO_S110-DP, SERVO_S110-CAN, SERVO_S110-PN

Can be changed: U, T	**Calculated:** CALC_MOD_ALL	**Access level:** 3
Data type: FloatingPoint32	**Dyn. index:** -	**Func. diagram:** -
P-Group: Motor identification	**Unit group:** -	**Unit selection:** -
Not for motor type: PMSM, REL	**Scaling:** -	**Expert list:** 1
Min	**Max**	**Factory setting**
0.0 [A/Vs]	999999.0 [A/Vs]	0.0 [A/Vs]

Description: P gain of the flux controller for an induction motor determined by the motor data identification.
This P gain can be changed after the identification and accepted in p1590 with p1910/p1960 = -3.

Dependency: Refer to: p1590, p1910

p3081 MotId flux controller integral time identified / Flux ctrl Tn ident

SERVO_S110-DP, SERVO_S110-CAN, SERVO_S110-PN

Can be changed: U, T	**Calculated:** CALC_MOD_ALL	**Access level:** 3
Data type: FloatingPoint32	**Dyn. index:** -	**Func. diagram:** -
P-Group: Motor identification	**Unit group:** -	**Unit selection:** -
Not for motor type: PMSM, REL	**Scaling:** -	**Expert list:** 1
Min	**Max**	**Factory setting**
0 [ms]	10000 [ms]	0 [ms]

Description: Integral time of the flux controller for an induction motor determined by the motor data identification.
This integral time can be changed after the identification and accepted in p1592 with p1910/p1960 = -3.

Dependency: Refer to: p1592, p1910

p3082 MotId current controller P gain identified / I_ctrl Kp ident

SERVO_S110-DP, SERVO_S110-CAN, SERVO_S110-PN

Can be changed: U, T	**Calculated:** CALC_MOD_ALL	**Access level:** 3
Data type: FloatingPoint32	**Dyn. index:** -	**Func. diagram:** -
P-Group: Motor identification	**Unit group:** 18_1	**Unit selection:** p0505
Not for motor type: REL	**Scaling:** -	**Expert list:** 1
Min	**Max**	**Factory setting**
0.000 [V/A]	100000.000 [V/A]	0.000 [V/A]

Description: P gain of the current controller determined by the motor data identification.
This P gain can be changed after the identification and accepted in p1715 with p1910/p1960 = -3.

Dependency: Refer to: p1715, p1910

p3083 MotId current controller integral time identified / I_ctrl Tn ident

SERVO_S110-DP, SERVO_S110-CAN, SERVO_S110-PN

Can be changed: U, T	**Calculated:** CALC_MOD_ALL	**Access level:** 3
Data type: FloatingPoint32	**Dyn. index:** -	**Func. diagram:** -
P-Group: Motor identification	**Unit group:** -	**Unit selection:** -
Not for motor type: REL	**Scaling:** -	**Expert list:** 1
Min	**Max**	**Factory setting**
0.00 [ms]	1000.00 [ms]	0.00 [ms]

Description: Integral time of the current controller determined by the motor data identification.
This integral time can be changed after the identification and accepted in p1717 with p1910/p1960 = -3.

Dependency: Refer to: p1717, p1910

p3088 MotId Motor model changeover speed operation with encoder ident. / MotMod n_chgSnsorI

SERVO_S110-DP, SERVO_S110-CAN, SERVO_S110-PN

Can be changed: U, T	**Calculated:** CALC_MOD_ALL	**Access level:** 3
Data type: FloatingPoint32	**Dyn. index:** -	**Func. diagram:** -
P-Group: Motor identification	**Unit group:** -	**Unit selection:** -
Not for motor type: -	**Scaling:** -	**Expert list:** 1
Min	**Max**	**Factory setting**
0.00000 [rpm]	210000.00000 [rpm]	0.00000 [rpm]

Description: Changeover speed for the motor model with encoder determined by the motor data identification.
This changeover speed can be changed after the identification and accepted in p1752 with p1910/p1960 = -3.

Dependency: Refer to: p1752, p1910

p3100 RTC time stamp mode / RTC t_stamp mode

CU_S110-DP, CU_S110-CAN, CU_S110-PN

Can be changed: U, T	**Calculated:** -	**Access level:** 3
Data type: Unsigned16	**Dyn. index:** -	**Func. diagram:** -
P-Group: -	**Unit group:** -	**Unit selection:** -
Not for motor type: -	**Scaling:** -	**Expert list:** 1
Min	**Max**	**Factory setting**
0	1	0

Description: Sets the mode for the time stamp
p3100 = 0: Time stamp, operating hours
p3100 = 1: Time stamp, UTC format

Note: RTC: Real-time clock
UTC: Universal Time Coordinates
The UTC time started, according to the definition on 01.01.1970 at 00:00:00 and is output in days and milliseconds.

p3101[0...1] RTC set UTC time / RTC set UTC

CU_S110-DP, CU_S110-CAN, CU_S110-PN

Can be changed: U, T	**Calculated:** -	**Access level:** 3
Data type: Unsigned32	**Dyn. index:** -	**Func. diagram:** -
P-Group: -	**Unit group:** -	**Unit selection:** -
Not for motor type: -	**Scaling:** -	**Expert list:** 0
Min	**Max**	**Factory setting**
0	4294967295	0

Description: Setting the UTC time.
This means that the drive system is synchronized to the time specified by the time master. To start p3101[1] must be written to followed by p3101[0]. After writing to p3101[0], the UTC time is accepted.
p3101[0]: Milliseconds
p3101[1]: Days

r3102[0...1] RTC read UTC time / RTC read UTC

CU_S110-DP, CU_S110-CAN, CU_S110-PN

Can be changed: -	**Calculated:** -	**Access level:** 3
Data type: Unsigned32	**Dyn. index:** -	**Func. diagram:** -
P-Group: -	**Unit group:** -	**Unit selection:** -
Not for motor type: -	**Scaling:** -	**Expert list:** 1
Min	**Max**	**Factory setting**
-	-	-

Description: Displays the actual UTC time in the drive system.
p3102[0]: Milliseconds
p3102[1]: Days

p3103 RTC synchronization source / RTC sync_source

CU_S110-DP, CU_S110-CAN, CU_S110-PN

Can be changed: U, T	**Calculated:** -	**Access level:** 3
Data type: Integer16	**Dyn. index:** -	**Func. diagram:** -
P-Group: -	**Unit group:** -	**Unit selection:** -
Not for motor type: -	**Scaling:** -	**Expert list:** 1
Min	**Max**	**Factory setting**
0	3	0

Description: Sets the synchronization source/technique.

Value:
0: PROFIBUS
1: PROFINET
2: PPI
3: PROFINET PTP

p3104 BI: RTC real time synchronization PING / RTC PING

CU_S110-DP, CU_S110-CAN, CU_S110-PN

Can be changed: U, T	**Calculated:** -	**Access level:** 3
Data type: Unsigned32 / Binary	**Dyn. index:** -	**Func. diagram:** -
P-Group: -	**Unit group:** -	**Unit selection:** -
Not for motor type: -	**Scaling:** -	**Expert list:** 1
Min	**Max**	**Factory setting**
-	-	0

Description: Sets the signal source for the PING event to set the UTC time.

Notice: The parameter may be protected as a result of p0922 or p2079 and cannot be changed.

r3108[0...1] RTC last synchronization deviation / RTC sync_dev

CU_S110-DP, CU_S110-CAN, CU_S110-PN

Can be changed: -	**Calculated:** -	**Access level:** 3
Data type: Unsigned32	**Dyn. index:** -	**Func. diagram:** -
P-Group: -	**Unit group:** -	**Unit selection:** -
Not for motor type: -	**Scaling:** -	**Expert list:** 1
Min	**Max**	**Factory setting**
-	-	-

Description: Displays the last synchronization deviation that was determined.
r3108[0]: Milliseconds
r3108[1]: Days

p3109 RTC real time synchronization tolerance window / RTC sync tol

CU_S110-DP, CU_S110-CAN, CU_S110-PN

Can be changed: U, T	**Calculated:** -	**Access level:** 3
Data type: Unsigned16	**Dyn. index:** -	**Func. diagram:** -
P-Group: -	**Unit group:** -	**Unit selection:** -
Not for motor type: -	**Scaling:** -	**Expert list:** 1
Min	**Max**	**Factory setting**
0 [ms]	1000 [ms]	100 [ms]

Description: Sets the tolerance window for time synchronization.
When this tolerance window is exceeded, an appropriate alarm is output.

Dependency: Refer to: A01099

r3114.9...11 CO/BO: Messages status word global / Msg ZSW global

CU_S110-DP, CU_S110-CAN, CU_S110-PN

Can be changed: -	**Calculated:** -	**Access level:** 2
Data type: Unsigned16	**Dyn. index:** -	**Func. diagram:** -
P-Group: Displays, signals	**Unit group:** -	**Unit selection:** -
Not for motor type: -	**Scaling:** -	**Expert list:** 1
Min	**Max**	**Factory setting**
-	-	-

Description: Displays the global status word for messages.
The appropriate bit is set if at least one message is present at the drive objects.

Bit field:

Bit	Signal name	1 signal	0 signal	FP
09	Alarm present	Yes	No	8065
10	Fault present	Yes	No	8060
11	Safety message present	Yes	No	-

Note: The status bits are displayed with delay.

r3115[0...63] Fault drive object initiating / F DO initiating

CU_S110-DP, CU_S110-CAN, CU_S110-PN, SERVO_S110-DP, SERVO_S110-CAN, SERVO_S110-PN

Can be changed: -	**Calculated:** -	**Access level:** 3
Data type: Integer32	**Dyn. index:** -	**Func. diagram:** 1750, 8060
P-Group: Messages	**Unit group:** -	**Unit selection:** -
Not for motor type: -	**Scaling:** -	**Expert list:** 1
Min	**Max**	**Factory setting**
-	-	-

Description: Displays the drive object number of the initiating drive object for this fault as integer number.
Value = 63:
The fault was initiated by the drive object itself.

Dependency: Refer to: r0945, r0947, r0948, r0949, r2109, r2130, r2133, r2136, r3120, r3122

Note: The buffer parameters are cyclically updated in the background (refer to status signal in r2139).
The structure of the fault buffer and the assignment of the indices is shown in r0945.

p3116 BI: Acknowledgement automatically suppressed / Ackn suppress

CU_S110-DP, CU_S110-CAN, CU_S110-PN

Can be changed: U, T	**Calculated:** -	**Access level:** 3
Data type: Unsigned32 / Binary	**Dyn. index:** -	**Func. diagram:** 8060
P-Group: Messages	**Unit group:** -	**Unit selection:** -
Not for motor type: -	**Scaling:** -	**Expert list:** 1
Min	**Max**	**Factory setting**
-	-	0

Description: Sets the signal source for the automatic acknowledgement on the device drive object.
BI: p3116 = 0 signal
Faults present are automatically acknowledged on the device drive object. Local device faults are forwarded to the first active drive object.
BI: p3116 = 1 signal
Faults present are not automatically acknowledged on the device drive object. Local device faults are not forwarded.

Dependency: Refer to: p2102, p2103, p2104, p2105, p3981

Note: When selecting a standard telegram, the BICO interconnection for control signal STW1.10 (master control by PLC) is automatically established.

p3117 Change safety message type / Ch. SI mess type

CU_S110-DP, CU_S110-CAN, CU_S110-PN

Can be changed: C1(1)	**Calculated:** -	**Access level:** 3
Data type: Unsigned32	**Dyn. index:** -	**Func. diagram:** -
P-Group: Messages	**Unit group:** -	**Unit selection:** -
Not for motor type: -	**Scaling:** -	**Expert list:** 1
Min	**Max**	**Factory setting**
0	1	0

Description: Sets the re-parameterization of all safety messages for faults and alarms.
The relevant message type during changeover is selected by the firmware.
0: Safety messages are not re-parameterized
1: Safety messages are re-parameterized

Note: A change only becomes effective after a POWER ON.

r3120[0...63] Component number fault / Comp_num flt

CU_S110-DP, CU_S110-CAN, CU_S110-PN, SERVO_S110-DP, SERVO_S110-CAN, SERVO_S110-PN

Can be changed: -	**Calculated:** -	**Access level:** 3
Data type: Unsigned32	**Dyn. index:** -	**Func. diagram:** 8060
P-Group: Messages	**Unit group:** -	**Unit selection:** -
Not for motor type: -	**Scaling:** -	**Expert list:** 1
Min	**Max**	**Factory setting**
-	-	-

Description: Displays the component number of the fault which has occurred.

Dependency: Refer to: r0945, r0947, r0948, r0949, r2109, r2130, r2133, r2136, r3122
Note: Value = 0: Assignment to a component not possible.
The buffer parameters are cyclically updated in the background (refer to status signal in r2139).
The structure of the fault buffer and the assignment of the indices is shown in r0945.

r3121[0...63] Component number alarm / Comp_num alarm

CU_S110-DP, CU_S110-CAN, CU_S110-PN, SERVO_S110-DP, SERVO_S110-CAN, SERVO_S110-PN

Can be changed: -	**Calculated:** -	**Access level:** 3
Data type: Unsigned32	**Dyn. index:** -	**Func. diagram:** 8065
P-Group: Messages	**Unit group:** -	**Unit selection:** -
Not for motor type: -	**Scaling:** -	**Expert list:** 1
Min	**Max**	**Factory setting**
-	-	-

Description: Displays the component number of the alarm which has occurred.
Dependency: Refer to: r2110, r2122, r2123, r2124, r2125, r2134, r2145, r2146, r3123
Note: Value = 0: Assignment to a component not possible.
The buffer parameters are cyclically updated in the background (refer to status signal in r2139).
The structure of the alarm buffer and the assignment of the indices is shown in r2122.

r3122[0...63] Diagnostic attribute fault / Diag_attr fault

CU_S110-DP, CU_S110-CAN, CU_S110-PN, SERVO_S110-DP, SERVO_S110-CAN, SERVO_S110-PN

Can be changed: -	**Calculated:** -	**Access level:** 3
Data type: Unsigned32	**Dyn. index:** -	**Func. diagram:** 8060
P-Group: Messages	**Unit group:** -	**Unit selection:** -
Not for motor type: -	**Scaling:** -	**Expert list:** 1
Min	**Max**	**Factory setting**
-	-	-

Description: Displays the diagnostic attribute of the fault which has occurred.

Bit field:

Bit	Signal name	1 signal	0 signal	FP
00	Hardware replacement recommended	Yes	No	-

Dependency: Refer to: r0945, r0947, r0948, r0949, r2109, r2130, r2133, r2136, r3120
Note: The buffer parameters are cyclically updated in the background (refer to status signal in r2139).
The structure of the fault buffer and the assignment of the indices is shown in r0945.

r3123[0...63] Diagnostic attribute alarm / Diag_attr alarm

CU_S110-DP, CU_S110-CAN, CU_S110-PN, SERVO_S110-DP, SERVO_S110-CAN, SERVO_S110-PN

Can be changed: -	**Calculated:** -	**Access level:** 3
Data type: Unsigned32	**Dyn. index:** -	**Func. diagram:** 8065
P-Group: Messages	**Unit group:** -	**Unit selection:** -
Not for motor type: -	**Scaling:** -	**Expert list:** 1
Min	**Max**	**Factory setting**
-	-	-

Description: Displays the diagnostic attribute of the alarm which has occurred.

Bit field:

Bit	Signal name	1 signal	0 signal	FP
00	Hardware replacement recommended	Yes	No	-

Dependency: Refer to: r2110, r2122, r2123, r2124, r2125, r2134, r2145, r2146, r3121
Note: The buffer parameters are cyclically updated in the background (refer to status signal in r2139).
The structure of the alarm buffer and the assignment of the indices is shown in r2122.

r3131 CO: Actual flt value / Actual flt value

CU_S110-DP, CU_S110-CAN, CU_S110-PN, SERVO_S110-DP, SERVO_S110-CAN, SERVO_S110-PN

Can be changed: -
Data type: Integer32
P-Group: Messages
Not for motor type: -
Min
-
Calculated: -
Dyn. index: -
Unit group: -
Scaling: -
Max
-
Access level: 3
Func. diagram: 8060
Unit selection: -
Expert list: 1
Factory setting
-

Description: Displays the fault value of the oldest active fault.
Dependency: Refer to: r2131, r3132

r3132 CO: Actual component number / Act comp_no.

CU_S110-DP, CU_S110-CAN, CU_S110-PN, SERVO_S110-DP, SERVO_S110-CAN, SERVO_S110-PN

Can be changed: -
Data type: Integer32
P-Group: Messages
Not for motor type: -
Min
-
Calculated: -
Dyn. index: -
Unit group: -
Scaling: -
Max
-
Access level: 3
Func. diagram: 8060
Unit selection: -
Expert list: 1
Factory setting
-

Description: Displays the component number of the oldest fault that is still active.
Dependency: Refer to: r2131, r3131

p3135 Suppress active fault / Supp act flt

SERVO_S110-DP, SERVO_S110-CAN, SERVO_S110-PN

Can be changed: U, T
Data type: Unsigned32
P-Group: Messages
Not for motor type: -
Min
-
Calculated: -
Dyn. index: -
Unit group: -
Scaling: -
Max
-
Access level: 4
Func. diagram: 8060
Unit selection: -
Expert list: 1
Factory setting
0000 0000 0000 0000 bin

Description: Sets the suppression of r2139.3 "Fault present" for certain fault responses.

Bit field:

Bit	Signal name	1 signal	0 signal	FP
08	Suppression of fault response ENCODER	ON	OFF	-
10	Suppression of fault response NONE	ON	OFF	-

Dependency: Refer to: p0491, r2139
Note: Depending on the suppression of a fault reaction in this parameter, r2139.1 "Acknowledgement required" is set when at least one fault occurs.
Re bit 08:
The suppression is only effective if p0491 = 1.

p3233[0...n] Torque actual value filter time constant / M_act_filt T

SERVO_S110-DP (Ext msg), SERVO_S110-CAN (Ext msg), SERVO_S110-PN (Ext msg)

Can be changed: U, T
Data type: FloatingPoint32
P-Group: Messages
Not for motor type: -
Min
0 [ms]
Calculated: -
Dyn. index: DDS, p0180
Unit group: -
Scaling: -
Max
1000000 [ms]
Access level: 3
Func. diagram: 8013
Unit selection: -
Expert list: 1
Factory setting
0 [ms]

Description: Sets the time constant of the PT1 element to smooth the torque actual value.
The smoothed actual torque is compared with the threshold values and is only used for messages and signals.

p3235 Phase failure signal motor monitoring time / Ph_fail t_monit

SERVO_S110-DP, SERVO_S110-CAN, SERVO_S110-PN

Can be changed: U, T	**Calculated:** -	**Access level:** 4
Data type: FloatingPoint32	**Dyn. index:** -	**Func. diagram:** -
P-Group: Messages	**Unit group:** -	**Unit selection:** -
Not for motor type: -	**Scaling:** -	**Expert list:** 1
Min	**Max**	**Factory setting**
0 [ms]	2000 [ms]	320 [ms]

Description: Sets the monitoring time for phase failure detection of the motor.

Notice: It is not possible to modify parameters after changing the value.

Note: For p3235 = 0 the function is deactivated.

p3290 Variable signaling function start / Var sig start

SERVO_S110-DP, SERVO_S110-CAN, SERVO_S110-PN

Can be changed: U, T	**Calculated:** -	**Access level:** 3
Data type: Unsigned8	**Dyn. index:** -	**Func. diagram:** 5301
P-Group: -	**Unit group:** -	**Unit selection:** -
Not for motor type: -	**Scaling:** -	**Expert list:** 1
Min	**Max**	**Factory setting**
-	-	0010 bin

Description: Settings for start/stop and the comparison type for the variable signaling function.

Bit field:

Bit	Signal name	1 signal	0 signal	FP
00	Activate function	Active	Not active	-
01	Comparison with sign	With sign	Without sign	-

p3291 CI: Variable signaling function signal source / Var sig S_src

SERVO_S110-DP, SERVO_S110-CAN, SERVO_S110-PN

Can be changed: U, T	**Calculated:** -	**Access level:** 3
Data type: Unsigned32 / Integer16	**Dyn. index:** -	**Func. diagram:** 5301
P-Group: -	**Unit group:** -	**Unit selection:** -
Not for motor type: -	**Scaling:** -	**Expert list:** 1
Min	**Max**	**Factory setting**
-	-	0

Description: Sets the signal source for the variable signaling function.

Dependency: Refer to: p3292, p3293

Note: Re p3291 = 1:
In this case, the signal source is defined using p3292 and p3293.

p3292 Variable signaling function signal source address / Var sig S_src addr

SERVO_S110-DP, SERVO_S110-CAN, SERVO_S110-PN

Can be changed: U, T	**Calculated:** -	**Access level:** 4
Data type: Unsigned32	**Dyn. index:** -	**Func. diagram:** 5301
P-Group: -	**Unit group:** -	**Unit selection:** -
Not for motor type: -	**Scaling:** -	**Expert list:** 1
Min	**Max**	**Factory setting**
0000 hex	FFFF FFFF hex	0000 hex

Description: Sets the address of the signal source for the variable signaling function.

Dependency: Refer to: p3291

Caution: If an incorrect address and data type are set, then this can cause the software to crash.

Note: This parameter should only be set for p3291 = 1.

p3293 Variable signaling function signal source data type / Var sig S_src type

SERVO_S110-DP, SERVO_S110-CAN, SERVO_S110-PN

Can be changed: U, T	**Calculated:** -	**Access level:** 4
Data type: Integer16	**Dyn. index:** -	**Func. diagram:** 5301
P-Group: -	**Unit group:** -	**Unit selection:** -
Not for motor type: -	**Scaling:** -	**Expert list:** 1
Min	**Max**	**Factory setting**
0	7	0

Description: Sets the data type of the signal source for the variable signaling function.

Value:
0: Unknown
1: U8, Unsigned8
2: I8, Signed8
3: U16, Unsigned16
4: I16, Signed16
5: U32, Unsigned32
6: I32, Signed32
7: Float, FloatingPoint32

Dependency: Refer to: p3291

Caution: If an incorrect address and data type are set, then this can cause the software to crash.

Note: This parameter should only be set for p3291 = 1.

r3294 BO: Variable signaling function output signal / Var sig outp_sig

SERVO_S110-DP, SERVO_S110-CAN, SERVO_S110-PN

Can be changed: -	**Calculated:** -	**Access level:** 3
Data type: Unsigned8	**Dyn. index:** -	**Func. diagram:** 5301
P-Group: -	**Unit group:** -	**Unit selection:** -
Not for motor type: -	**Scaling:** -	**Expert list:** 1
Min	**Max**	**Factory setting**
-	-	-

Description: Displays the output signal for the variable signaling function.

Dependency: Refer to: p3290, p3291, p3295, p3296, p3297, p3298

p3295 Variable signaling function threshold value / Var sig thresh_val

SERVO_S110-DP, SERVO_S110-CAN, SERVO_S110-PN

Can be changed: U, T	**Calculated:** -	**Access level:** 3
Data type: FloatingPoint32	**Dyn. index:** -	**Func. diagram:** 5301
P-Group: -	**Unit group:** -	**Unit selection:** -
Not for motor type: -	**Scaling:** -	**Expert list:** 1
Min	**Max**	**Factory setting**
-340.28235E36	340.28235E36	0.000

Description: Sets the threshold value for the variable signaling function.

p3296 Variable signaling function hysteresis / Var sig hyst

SERVO_S110-DP, SERVO_S110-CAN, SERVO_S110-PN

Can be changed: U, T	**Calculated:** -	**Access level:** 3
Data type: FloatingPoint32	**Dyn. index:** -	**Func. diagram:** 5301
P-Group: -	**Unit group:** -	**Unit selection:** -
Not for motor type: -	**Scaling:** -	**Expert list:** 1
Min	**Max**	**Factory setting**
0.000	340.28235E36	0.000

Description: Sets the hysteresis for the variable signaling function.

p3297 Variable signaling function pickup delay / Var sig t_pickup

SERVO_S110-DP, SERVO_S110-CAN, SERVO_S110-PN

Can be changed: U, T	**Calculated:** -	**Access level:** 3
Data type: Unsigned16	**Dyn. index:** -	**Func. diagram:** 5301
P-Group: -	**Unit group:** -	**Unit selection:** -
Not for motor type: -	**Scaling:** -	**Expert list:** 1
Min	**Max**	**Factory setting**
0 [ms]	10000 [ms]	0 [ms]

Description: Sets the pickup delay for the variable signaling function.

Notice: Values that do not comply with the following condition are treated just like value 0:
Pickup delay (p3297) >= sampling time (p3299)

Note: For a value of 0, the pickup delay is disabled.
The output signal is set if the condition for the 1 signal is fulfilled for longer than the selected time.

p3298 Variable signaling function dropout delay / Var sig t_dropout

SERVO_S110-DP, SERVO_S110-CAN, SERVO_S110-PN

Can be changed: U, T	**Calculated:** -	**Access level:** 3
Data type: Unsigned16	**Dyn. index:** -	**Func. diagram:** 5301
P-Group: -	**Unit group:** -	**Unit selection:** -
Not for motor type: -	**Scaling:** -	**Expert list:** 1
Min	**Max**	**Factory setting**
0 [ms]	10000 [ms]	0 [ms]

Description: Sets the dropout delay for the variable signaling function.

Notice: Values that do not comply with the following condition are treated just like value 0:
Dropout delay (p3298) >= sampling time (p3299)

Note: For a value of 0, the dropout delay is disabled.
The output signal is reset if the condition for the 0 signal is fulfilled for longer than the selected time.

p3299 Variable signaling function sampling time / Var sig t_sample

SERVO_S110-DP, SERVO_S110-CAN, SERVO_S110-PN

Can be changed: U, T	**Calculated:** -	**Access level:** 3
Data type: FloatingPoint32	**Dyn. index:** -	**Func. diagram:** 5301
P-Group: -	**Unit group:** -	**Unit selection:** -
Not for motor type: -	**Scaling:** -	**Expert list:** 1
Min	**Max**	**Factory setting**
1.000 [ms]	4.000 [ms]	4.000 [ms]

Description: Sets the sampling time for the variable signaling function.

Notice: The following must apply for the setting:
Sampling time (p3299) <= pickup delay (p3297), dropout delay (p3298)

Note: Only the following values can be set:
1.000, 2.000, 3.000, 4.000

p3900 Completion of quick commissioning / Compl quick_comm

SERVO_S110-DP, SERVO_S110-CAN, SERVO_S110-PN

Can be changed: C2(1)	**Calculated:** -	**Access level:** 1
Data type: Integer16	**Dyn. index:** -	**Func. diagram:** -
P-Group: Displays, signals	**Unit group:** -	**Unit selection:** -
Not for motor type: -	**Scaling:** -	**Expert list:** 1
Min	**Max**	**Factory setting**
0	3	0

Description: Exits quick commissioning (p0010 = 1) with automatic calculation of all parameters of all existing drive data sets that depend on the entries made during quick commissioning.

p3900 = 1 initially includes a parameter reset (factory setting, the same as p0970 = 1) for all parameters of the drive object; however, without overwriting the entries made during the quick commissioning.

The interconnections of PROFIBUS PZD telegram selection (p0922) and the interconnections via p0700, p1000 and p1500 are re-established and all of the dependent motor, open-loop and control-loop control parameters are calculated (corresponding to p0340 = 1).

p3900 = 2 includes the restoration of the interconnections of PROFIBUS PZD telegram selection (p0922) and the interconnections via p0700, p1000 and p1500 and the calculations corresponding to p0340 = 1.

p3900 = 3 only includes the calculations associated with the motor, open-loop and closed-loop control parameters corresponding to p0340 = 1.

Value:
0: No quick parameterization
1: Quick parameterization after parameter reset
2: Quick parameterization (only) for BICO and motor parameters
3: Quick parameterization for motor parameters (only)

Notice: It is not possible to modify parameters after changing the value.

Note: When the calculations have been completed, p3900 and p0010 are automatically reset to a value of 0.

When calculating motor, open-loop and closed-loop control parameters (such as for p0340 = 1) parameters associated with a selected Siemens catalog motor are not overwritten.

If a catalog motor has not been selected (see p0300), then the following parameters are reset with p3900 > 0 in order to restore the situation that applied when commissioning the drive for the first time:

for induction motors p0320, p0352, p0353, p0604, p0605, p0626 ... p0628.

for synchronous motors p0326, p0327, p0352, p0353, p0391 ... p0393, p0604, p0605.

r3925[0...n] Identification final display / Ident final_disp

SERVO_S110-DP, SERVO_S110-CAN, SERVO_S110-PN

Can be changed: -	**Calculated:** CALC_MOD_ALL	**Access level:** 3
Data type: Unsigned32	**Dyn. index:** DDS, p0180	**Func. diagram:** -
P-Group: Motor	**Unit group:** -	**Unit selection:** -
Not for motor type: -	**Scaling:** -	**Expert list:** 1
Min	**Max**	**Factory setting**
-	-	-

Description: Displays the commissioning steps that have been carried out.

Bit field:

Bit	Signal name	1 signal	0 signal	FP
00	Motor/control parameters calculated (p0340 = 1, p3900 > 0)	Yes	No	-
02	Motor data identification carried out at standstill (p1910 = 1)	Yes	No	-
03	Rotating measurement carried out (p1960 = 1, 2)	Yes	No	-
04	Motor encoder adjustment carried out (p1960 = 1, p1990 = 1)	Yes	No	-
05	Motor encoder manually adjusted	Yes	No	-
15	Motor equivalent circuit diagram parameters changed	Changed	Not changed	-

Note: The individual bits are only set if the appropriate action has been initiated and successfully completed.

When motor rating plate parameters are changed, the final display is reset.

When setting the individual bits, all of the most significant bits are reset.

r3927[0...n] Motor data identification induction motor data determined / MotID ASM dat det

SERVO_S110-DP, SERVO_S110-CAN, SERVO_S110-PN

Can be changed: -	**Calculated:** CALC_MOD_ALL	**Access level:** 3
Data type: Unsigned32	**Dyn. index:** DDS, p0180	**Func. diagram:** -
P-Group: Motor identification	**Unit group:** -	**Unit selection:** -
Not for motor type: -	**Scaling:** -	**Expert list:** 1
Min	**Max**	**Factory setting**
-	-	-

Description: Displays the data of an induction motor determined and accepted from the stationary motor data identification or rotating measurement.

Bit field:

Bit	Signal name	1 signal	0 signal	FP
00	p0350 accepted	Yes	No	-
01	p0354 accepted	Yes	No	-
02	p0356 accepted	Yes	No	-
03	p0358 accepted	Yes	No	-
04	p0360 accepted	Yes	No	-
05	p0320 accepted	Yes	No	-
06	p0410 accepted	Yes	No	-

12	p1715 accepted	Yes	No	-
13	p1717 accepted	Yes	No	-
14	p1590 accepted	Yes	No	-
15	p1592 accepted	Yes	No	-
22	p0341 accepted	Yes	No	-
24	p0348 accepted	Yes	No	-
25	p1752 accepted	Yes	No	-

Dependency: Refer to: r3925

r3928[0...n] Motor data identification synchronous motor data determined / MotId PEM dat det

SERVO_S110-DP, SERVO_S110-CAN, SERVO_S110-PN

Can be changed: - **Calculated:** CALC_MOD_ALL **Access level:** 3
Data type: Unsigned32 **Dyn. index:** DDS, p0180 **Func. diagram:** -
P-Group: Motor identification **Unit group:** - **Unit selection:** -
Not for motor type: REL **Scaling:** - **Expert list:** 1

Min	Max	Factory setting
-	-	-

Description: Successfully completed component of the last rotating measurement carried out.

Bit field:

Bit	Signal name	1 signal	0 signal	FP
00	p0350 accepted	Yes	No	-
02	p0356 accepted	Yes	No	-
06	p0410 accepted	Yes	No	-
07	p0431 accepted	Yes	No	-
08	p1952 accepted	Yes	No	-
09	p1953 accepted	Yes	No	-
12	p1715 accepted	Yes	No	-
13	p1717 accepted	Yes	No	-
18	p0316 accepted	Yes	No	-
19	p0317 accepted	Yes	No	-
20	p0327 accepted	Yes	No	-
21	p0328 accepted	Yes	No	-
22	p0341 accepted	Yes	No	-
23	kT characteristic parameter accepted	Yes	No	-
24	p0348 accepted	Yes	No	-

Dependency: Refer to: r3925

r3930[0...4] Power unit EEPROM characteristics / PU characteristics

CU_S110-DP, CU_S110-CAN, CU_S110-PN

Can be changed: - **Calculated:** - **Access level:** 3
Data type: Unsigned16 **Dyn. index:** - **Func. diagram:** -
P-Group: - **Unit group:** - **Unit selection:** -
Not for motor type: - **Scaling:** - **Expert list:** 1

Min	Max	Factory setting
-	-	-

Description: Displays the characteristics (A5E number and versions) of the power unit.
[0]: A5E number xxxx (A5Exxxxyyyy)
[1]: A5E number yyyy (A5Exxxxyyyy)
[2]: File version (logistic)
[3]: File version (fixed data)
[4]: File version (calib data)

p3950 Service parameter / Serv par

CU_S110-DP, CU_S110-CAN, CU_S110-PN

Can be changed: C1, U, T **Calculated:** - **Access level:** 3
Data type: Unsigned16 **Dyn. index:** - **Func. diagram:** -
P-Group: - **Unit group:** - **Unit selection:** -
Not for motor type: - **Scaling:** - **Expert list:** 1

Min	Max	Factory setting
-	-	-

Description: For service personnel only.

r3974 Drive unit status word / Drv_unit ZSW

CU_S110-DP, CU_S110-CAN, CU_S110-PN

Can be changed: - **Calculated:** - **Access level:** 1
Data type: Unsigned32 **Dyn. index:** - **Func. diagram:** -
P-Group: - **Unit group:** - **Unit selection:** -
Not for motor type: - **Scaling:** - **Expert list:** 1

Min	Max	Factory setting
-	-	-

Description: Displays the status word for the drive unit.

Bit field:

Bit	Signal name	1 signal	0 signal	FP
00	Software reset active	Yes	No	-
01	Writing of parameters disabled as parameter save in progress	Yes	No	-
02	Writing of parameters disabled as macro is running	Yes	No	-

r3977 BICO counter topology / BICO counter topo

CU_S110-DP, CU_S110-CAN, CU_S110-PN

Can be changed: - **Calculated:** - **Access level:** 4
Data type: Unsigned32 **Dyn. index:** - **Func. diagram:** -
P-Group: Commands **Unit group:** - **Unit selection:** -
Not for motor type: - **Scaling:** - **Expert list:** 1

Min	Max	Factory setting
-	-	-

Description: Displays the BICO interconnections that have been parameterized in the complete (overall) topology.
The counter is incremented by one for each modified BICO interconnection.

Dependency: Refer to: r3978

r3978 BICO CounterDevice / BICO CounterDevice

CU_S110-DP, CU_S110-CAN, CU_S110-PN

Can be changed: - **Calculated:** - **Access level:** 4
Data type: Unsigned32 **Dyn. index:** - **Func. diagram:** -
P-Group: Commands **Unit group:** - **Unit selection:** -
Not for motor type: - **Scaling:** - **Expert list:** 1

Min	Max	Factory setting
-	-	-

Description: Displays the counter reading for modified BICO interconnections on this device.
The counter is incremented by one for each modified BICO interconnection.

p3981 Faults acknowledge drive object / Faults ackn DO

CU_S110-DP, CU_S110-CAN, CU_S110-PN, SERVO_S110-DP, SERVO_S110-CAN, SERVO_S110-PN

Can be changed: U, T **Calculated:** - **Access level:** 2
Data type: Unsigned8 **Dyn. index:** - **Func. diagram:** 8060
P-Group: Messages **Unit group:** - **Unit selection:** -
Not for motor type: - **Scaling:** - **Expert list:** 1

Min	Max	Factory setting
0	1	0

Description: Setting to acknowledge all active faults of a drive object.

Note: Parameter should be set from 0 to 1 to acknowledge.
After acknowledgement, the parameter is automatically reset to 0.

p3985 Master control mode selection / PcCtrl mode select

SERVO_S110-DP, SERVO_S110-CAN, SERVO_S110-PN

Can be changed: U, T	**Calculated:** -	**Access level:** 3
Data type: Integer16	**Dyn. index:** -	**Func. diagram:** -
P-Group: Setpoints	**Unit group:** -	**Unit selection:** -
Not for motor type: -	**Scaling:** -	**Expert list:** 1
Min	**Max**	**Factory setting**
0	1	0

Description: Sets the mode to change over the master control / LOCAL mode.

Value:
0: Change master control for STW1.0 = 0
1: Change master control in operation

Danger: When changing the master control in operation, the drive can manifest undesirable behavior - e.g. it can accelerate up to another setpoint.

r3986 Parameter count / Parameter No.

CU_S110-DP, CU_S110-CAN, CU_S110-PN

Can be changed: -	**Calculated:** -	**Access level:** 3
Data type: Unsigned16	**Dyn. index:** -	**Func. diagram:** -
P-Group: -	**Unit group:** -	**Unit selection:** -
Not for motor type: -	**Scaling:** -	**Expert list:** 1
Min	**Max**	**Factory setting**
-	-	-

Description: Displays the number of parameters for this drive unit.
The number comprises the device-specific and the drive-specific parameters.

Dependency: Refer to: r0980, r0981, r0989

r3988[0...1] Boot state / Boot_state

CU_S110-DP, CU_S110-CAN, CU_S110-PN

Can be changed: -	**Calculated:** -	**Access level:** 3
Data type: Integer16	**Dyn. index:** -	**Func. diagram:** -
P-Group: -	**Unit group:** -	**Unit selection:** -
Not for motor type: -	**Scaling:** -	**Expert list:** 1
Min	**Max**	**Factory setting**
0	10800	-

Description: Index 0:
Displays the boot state.
Index 1:
Displays the partial boot state

Value:
0: Not active
1: Fatal fault
10: Fault
20: Reset all parameters
30: Drive object modified
40: Download using commissioning software
50: Parameter download using commissioning software
90: Reset Control Unit and delete drive objects
100: Start initialization
110: Instantiate Control Unit basis
150: Wait until actual topology determined
160: Evaluate topology
170: Instantiate Control Unit reset
180: Initialization YDB configuration information
200: First commissioning
210: Create drive packages
250: Wait for topology acknowledge
325: Wait for input of drive type
350: Determine drive type
360: Write into topology-dependent parameters
370: Wait until p0009 = 0 is set

380: Check topology
550: Call conversion functions for parameter
625: Wait non-cyclic starting DRIVE-CLiQ
650: Start cyclic operation
660: Evaluate drive commissioning status
670: Autom. FW update DRIVE-CLiQ components
680: Wait for CU LINK slaves
690: Wait non-cyclic starting DRIVE-CLiQ
700: Save parameters
725: Wait until DRIVE-CLiQ cyclic
740: Check the ability to operate
745: Start of the time slices
750: Interrupt enable
800: Initialization finished
10050: Wait for synchronization
10100: Wait for CU LINK slaves
10150: Wait until actual topology determined
10200: Evaluation component status
10250: Call conversion functions for parameter
10300: Preparation cyclic operation
10350: Autom. FW update DRIVE-CLiQ components
10400: Wait for slave properties
10450: Check CX/NX status
10500: Wait until DRIVE-CLiQ cyclic
10550: Carry out warm start
10600: Evaluate, encoder status
10800: Partial boot completed

Index: [0] = System
[1] = Partial boot

r3998[0...n] First drive commissioning / First drv_comm

SERVO_S110-DP, SERVO_S110-CAN, SERVO_S110-PN

Can be changed: -	**Calculated:** -	**Access level:** 3
Data type: Unsigned16	**Dyn. index:** DDS, p0180	**Func. diagram:** -
P-Group: -	**Unit group:** -	**Unit selection:** -
Not for motor type: -	**Scaling:** -	**Expert list:** 1
Min	**Max**	**Factory setting**
0	65535	-

Description: Displays whether the drive still has to be commissioned for the first time.
0 = Yes
2 = No

r4640[0...95] Encoder diagnostics state machine / Enc diag SM

SERVO_S110-DP, SERVO_S110-CAN, SERVO_S110-PN

Can be changed: -	**Calculated:** -	**Access level:** 4
Data type: Unsigned32	**Dyn. index:** -	**Func. diagram:** -
P-Group: Encoder	**Unit group:** -	**Unit selection:** -
Not for motor type: -	**Scaling:** -	**Expert list:** 1
Min	**Max**	**Factory setting**
-	-	-

Description: Displays the encoder diagnostics for the PROFIdrive interface.

p4650 Encoder functional reserve component number / Enc fct_res num

CU_S110-DP, CU_S110-CAN, CU_S110-PN

Can be changed: U, T	**Calculated:** -	**Access level:** 3
Data type: Unsigned16	**Dyn. index:** -	**Func. diagram:** -
P-Group: Displays, signals	**Unit group:** -	**Unit selection:** -
Not for motor type: -	**Scaling:** -	**Expert list:** 1
Min	**Max**	**Factory setting**
0	399	0

Description: Sets the component number (p0141) of the encoder whose functional reserve is to be displayed (r4651).

Dependency: Refer to: r4651

r4651[0...3] Encoder functional reserve / Enc fct_reserve

CU_S110-DP, CU_S110-CAN, CU_S110-PN

Can be changed: -	**Calculated:** -	**Access level:** 3
Data type: FloatingPoint32	**Dyn. index:** -	**Func. diagram:** -
P-Group: Displays, signals	**Unit group:** -	**Unit selection:** -
Not for motor type: -	**Scaling:** -	**Expert list:** 1
Min	**Max**	**Factory setting**
- [%]	- [%]	- [%]

Description: Displays the functional reserve of the encoder selected via p4650.
0 ... 25 %:
The function limit has been reached. A service is recommended.
26 ... 100 %:
The encoder is working in the specified range.

Index: [0] = Incremental
[1] = Reserved
[2] = Abs track
[3] = Code conn

Dependency: Refer to: p4650

Note: Value = 999 means:
- the component specified in p4650 is not connected
- the encoder does not support the display of the functional reserve

p4660[0...2] Sensor Module filter bandwidth / SM Filt_bandw

SERVO_S110-DP, SERVO_S110-CAN, SERVO_S110-PN

Can be changed: C2(4)	**Calculated:** -	**Access level:** 3
Data type: FloatingPoint32	**Dyn. index:** -	**Func. diagram:** -
P-Group: Encoder	**Unit group:** -	**Unit selection:** -
Not for motor type: -	**Scaling:** -	**Expert list:** 1
Min	**Max**	**Factory setting**
0.00 [kHz]	20000.00 [kHz]	0.00 [kHz]

Description: Sets the filter bandwidth for Sensor Module SMx10 (resolver) and SMx20 (sin/cos).
The value set on the Sensor Module is displayed in r4661.
The Sensor Module hardware only supports the following values:
- 0: The Sensor Module's default is used.
- 50 kHz
- 170 kHz
- 500 kHz
- Unlimited: Only the bandwidth of the operational amplifier is effective.

Index: [0] = Encoder 1
[1] = Encoder 2
[2] = Reserved

Dependency: Refer to: r4661

Note: A value of zero is displayed if an encoder is not present.

r4661[0...2] Sensor Module filter bandwidth display / SM Filt_bandw disp

SERVO_S110-DP, SERVO_S110-CAN, SERVO_S110-PN

Can be changed: -	**Calculated:** -	**Access level:** 3
Data type: FloatingPoint32	**Dyn. index:** -	**Func. diagram:** -
P-Group: Encoder	**Unit group:** -	**Unit selection:** -
Not for motor type: -	**Scaling:** -	**Expert list:** 1
Min	**Max**	**Factory setting**
- [kHz]	- [kHz]	- [kHz]

Description: Display of the effective filter bandwidth for Sensor Module SMx10 (resolver) and SMx20 (sin/cos).
The bandwidth of the filter is set using p4660.

Index: [0] = Encoder 1
[1] = Encoder 2
[2] = Reserved

Dependency: Refer to: p4660

Note: A value of zero is displayed if an encoder is not present.

p4662[0...n] Encoder characteristic type / Enc char_type

SERVO_S110-DP, SERVO_S110-CAN, SERVO_S110-PN

Can be changed: C2(4)	**Calculated:** -	**Access level:** 4
Data type: Integer16	**Dyn. index:** EDS, p0140	**Func. diagram:** -
P-Group: Encoder	**Unit group:** -	**Unit selection:** -
Not for motor type: -	**Scaling:** -	**Expert list:** 1
Min	**Max**	**Factory setting**
0	1	0

Description: Sets the characteristic type.
For non-linear sensors, the interrelationship between the signal voltage and the position can be defined using a third degree polynomial.

Value: 0: Characteristic inactive
1: Characteristic polynomial third degree

Dependency: Refer to: p4663, p4664, p4665, p4666

Note: If value = 1:
A third degree polynomial is defined as follows:
F(x) = K3 * x^3 + K2 * x^2 + K1 * x + K0
Coefficients K0 ... K3 should be defined and entered into p4663 ... p4666.
The sensor range is emulated to x = -0.5 ... +0.5.

p4663[0...n] Encoder characteristic K0 / Enc char K0

SERVO_S110-DP, SERVO_S110-CAN, SERVO_S110-PN

Can be changed: U, T	**Calculated:** -	**Access level:** 4
Data type: FloatingPoint32	**Dyn. index:** EDS, p0140	**Func. diagram:** -
P-Group: -	**Unit group:** -	**Unit selection:** -
Not for motor type: -	**Scaling:** -	**Expert list:** 1
Min	**Max**	**Factory setting**
-	-	-

Description: Setting for coefficient K0 to calculate the characteristic (p4662).

Dependency: Refer to: p4662, p4664, p4665, p4666

p4664[0...n] Encoder characteristic K1 / Enc char K1

SERVO_S110-DP, SERVO_S110-CAN, SERVO_S110-PN

Can be changed: U, T	**Calculated:** -	**Access level:** 4
Data type: FloatingPoint32	**Dyn. index:** EDS, p0140	**Func. diagram:** -
P-Group: -	**Unit group:** -	**Unit selection:** -
Not for motor type: -	**Scaling:** -	**Expert list:** 1
Min	**Max**	**Factory setting**
-	-	-

Description: Setting for coefficient K1 to calculate the characteristic (p4662).

Dependency: Refer to: p4662, p4663, p4665, p4666

p4665[0...n] Encoder characteristic K2 / Enc char K2

SERVO_S110-DP, SERVO_S110-CAN, SERVO_S110-PN

Can be changed: U, T	**Calculated:** -	**Access level:** 4
Data type: FloatingPoint32	**Dyn. index:** EDS, p0140	**Func. diagram:** -
P-Group: -	**Unit group:** -	**Unit selection:** -
Not for motor type: -	**Scaling:** -	**Expert list:** 1
Min	**Max**	**Factory setting**
-	-	-

Description: Setting for coefficient K2 to calculate the characteristic (p4662).

Dependency: Refer to: p4662, p4663, p4664, p4666

p4666[0...n] Encoder characteristic K3 / Enc char K3

SERVO_S110-DP, SERVO_S110-CAN, SERVO_S110-PN

Can be changed: U, T	**Calculated:** -	**Access level:** 4
Data type: FloatingPoint32	**Dyn. index:** EDS, p0140	**Func. diagram:** -
P-Group: -	**Unit group:** -	**Unit selection:** -
Not for motor type: -	**Scaling:** -	**Expert list:** 1
Min	**Max**	**Factory setting**
-	-	-

Description: Setting for coefficient K3 to calculate the characteristic (p4662).

Dependency: Refer to: p4662, p4663, p4664, p4665

p4670[0...n] Analog sensor configuration / Ana_sens config

SERVO_S110-DP, SERVO_S110-CAN, SERVO_S110-PN

Can be changed: U, T	**Calculated:** -	**Access level:** 4
Data type: Unsigned32	**Dyn. index:** EDS, p0140	**Func. diagram:** -
P-Group: -	**Unit group:** -	**Unit selection:** -
Not for motor type: -	**Scaling:** -	**Expert list:** 1
Min	**Max**	**Factory setting**
-	-	0000 0000 0000 0000 bin

Description: Sets the configuration for evaluation on the analog sensor.

Bit field:

Bit	Signal name	1 signal	0 signal	FP
06	Set velocity to 0	Yes	No	-
08	Pos val range	0.0 / 1.0 pulse	-0.5 / +0.5 pulse	-
09	Fault/alarm messages	Alarm	Fault	-
10	Channel B act	Yes	No	-
11	Channel A act	Yes	No	-
13	Commutation angle constant	Yes	No	-

Notice:

Re bit 06:

Setting the bit sets the velocity actual value (r0061) permanently to 0.

Re bit 13:

Setting the bit sets the commutation angle permanently to the commutation angle offset (p0431).

Note:

Re bit 09:

A setting of bit = 0 will trigger a fault for the relevant channel if the actual value is invalid.

A setting of bit = 1 will trigger an alarm for the relevant channel if the actual value is invalid.

Re bit 10, 11:

If both channels are activated, the actual value is generated from the mean value of both channels. If a channel fails (actual value invalid), it is not included when the mean value is generated.

p4671[0...n] Analog sensor input / Ana_sens inp

SERVO_S110-DP, SERVO_S110-CAN, SERVO_S110-PN

Can be changed: C2(4)	**Calculated:** -	**Access level:** 4
Data type: Integer16	**Dyn. index:** EDS, p0140	**Func. diagram:** -
P-Group: Encoder	**Unit group:** -	**Unit selection:** -
Not for motor type: -	**Scaling:** -	**Expert list:** 1
Min	**Max**	**Factory setting**
0	3	0

Description: Sets the input circuit for the analog sensor.

Value:

0: Differential
1: Single-ended A, B
2: Single-ended A*, B*
3: Single-ended A, B sensitive

Note:

p4671 = 0:

The two signals on a track are evaluated differentially.

p4671 = 1:

Only the non-inverted signal on a track is evaluated.

p4671 = 2:

Only the inverted signal on a track is evaluated.

p4671 = 3:
Only the non-inverted signal on a track (high resolution) is evaluated.

p4672[0...n] Analog sensor channel A voltage at actual value zero / Ana_sens A U at 0

SERVO_S110-DP, SERVO_S110-CAN, SERVO_S110-PN

Can be changed: U, T	**Calculated:** -	**Access level:** 4
Data type: FloatingPoint32	**Dyn. index:** EDS, p0140	**Func. diagram:** -
P-Group: -	**Unit group:** -	**Unit selection:** -
Not for motor type: -	**Scaling:** -	**Expert list:** 1
Min	**Max**	**Factory setting**
-10.0000 [V]	10.0000 [V]	0.0000 [V]

Description: Sets the voltage when the connected sensor is at actual value zero.
At this voltage channel A supplies an actual value of zero.

p4673[0...n] Analog sensor channel A voltage per encoder period / Ana_sens A U/per

SERVO_S110-DP, SERVO_S110-CAN, SERVO_S110-PN

Can be changed: U, T	**Calculated:** -	**Access level:** 4
Data type: FloatingPoint32	**Dyn. index:** EDS, p0140	**Func. diagram:** -
P-Group: -	**Unit group:** -	**Unit selection:** -
Not for motor type: -	**Scaling:** -	**Expert list:** 1
Min	**Max**	**Factory setting**
-10.0000 [V]	10.0000 [V]	6.0000 [V]

Description: Sets the output voltage range to be mapped for the connected analog sensor.
The voltage range is determined by the following parameters:
- p4672 (voltage at actual value 0)
- p4673 (voltage per encoder period)

Note: The minimum actual value which can be mapped is equal to p4672 - p4673/2.
The maximum actual value which can be mapped is equal to p4672 + p4673/2.

p4674[0...n] Analog sensor channel B voltage at actual value zero / Ana_sens B U at 0

SERVO_S110-DP, SERVO_S110-CAN, SERVO_S110-PN

Can be changed: U, T	**Calculated:** -	**Access level:** 4
Data type: FloatingPoint32	**Dyn. index:** EDS, p0140	**Func. diagram:** -
P-Group: -	**Unit group:** -	**Unit selection:** -
Not for motor type: -	**Scaling:** -	**Expert list:** 1
Min	**Max**	**Factory setting**
-10.0000 [V]	10.0000 [V]	0.0000 [V]

Description: Sets the voltage when the connected sensor is at actual value zero.
At this voltage channel B supplies an actual value of zero.

p4675[0...n] Analog sensor channel B voltage per encoder period / Ana_sens B U/per

SERVO_S110-DP, SERVO_S110-CAN, SERVO_S110-PN

Can be changed: U, T	**Calculated:** -	**Access level:** 4
Data type: FloatingPoint32	**Dyn. index:** EDS, p0140	**Func. diagram:** -
P-Group: -	**Unit group:** -	**Unit selection:** -
Not for motor type: -	**Scaling:** -	**Expert list:** 1
Min	**Max**	**Factory setting**
-10.0000 [V]	10.0000 [V]	6.0000 [V]

Description: Sets the output voltage range to be mapped for the connected analog sensor.
The voltage range is determined by the following parameters:
- p4674 (voltage at actual value 0)
- p4675 (voltage per encoder period)

Note: The minimum actual value which can be mapped is equal to p4674 - p4675/2.
The maximum actual value which can be mapped is equal to p4674 + p4675/2.

p4676[0...n] Analog sensor range limit threshold / Ana_sens lim thr

SERVO_S110-DP, SERVO_S110-CAN, SERVO_S110-PN

Can be changed: U, T	**Calculated:** -	**Access level:** 4
Data type: FloatingPoint32	**Dyn. index:** EDS, p0140	**Func. diagram:** -
P-Group: -	**Unit group:** -	**Unit selection:** -
Not for motor type: -	**Scaling:** -	**Expert list:** 1
Min	**Max**	**Factory setting**
0.0 [%]	100.0 [%]	100.0 [%]

Description: Sets the threshold for limit monitoring of the absolute actual value on the analog sensor.
If this threshold is overshot by the actual value of a channel, a corresponding fault/alarm (p4670.9) is output.

Dependency: Refer to: p4673, p4675

p4677[0...n] Analog sensor LVDT configuration / Ana_sens LVDT conf

SERVO_S110-DP, SERVO_S110-CAN, SERVO_S110-PN

Can be changed: C2(4)	**Calculated:** -	**Access level:** 4
Data type: Unsigned32	**Dyn. index:** EDS, p0140	**Func. diagram:** -
P-Group: Encoder	**Unit group:** -	**Unit selection:** -
Not for motor type: -	**Scaling:** -	**Expert list:** 1
Min	**Max**	**Factory setting**
-	-	0000 bin

Description: Sets the configuration for LVDT mode on the analog sensor.

Bit field:

Bit	Signal name	1 signal	0 signal	FP
00	LVDT ON	Yes	No	-
01	Track B excitation	Yes	No	-
02	Fixed value amplitude	Yes	No	-
03	Fixed value amplitude and phase	Yes	No	-

p4678[0...n] Analog sensor LVDT ratio / An_sens LVDT ratio

SERVO_S110-DP, SERVO_S110-CAN, SERVO_S110-PN

Can be changed: C2(4)	**Calculated:** -	**Access level:** 4
Data type: FloatingPoint32	**Dyn. index:** EDS, p0140	**Func. diagram:** -
P-Group: Encoder	**Unit group:** -	**Unit selection:** -
Not for motor type: -	**Scaling:** -	**Expert list:** 1
Min	**Max**	**Factory setting**
0.00 [%]	200.00 [%]	50.00 [%]

Description: Sets the ratio for the LVDT sensor.

p4679[0...n] Analog sensor LVDT phase / An_sens LVDT ph

SERVO_S110-DP, SERVO_S110-CAN, SERVO_S110-PN

Can be changed: C2(4), T	**Calculated:** -	**Access level:** 4
Data type: FloatingPoint32	**Dyn. index:** EDS, p0140	**Func. diagram:** -
P-Group: Encoder	**Unit group:** -	**Unit selection:** -
Not for motor type: -	**Scaling:** -	**Expert list:** 1
Min	**Max**	**Factory setting**
-360.00 [°]	360.00 [°]	0.00 [°]

Description: Sets the phase for the LVDT sensor.

p4680[0...n] Zero mark monitoring tolerance permissible / ZM_monit tol perm

SERVO_S110-DP, SERVO_S110-CAN, SERVO_S110-PN

Can be changed: C2(4)	**Calculated:** -	**Access level:** 3
Data type: Unsigned32	**Dyn. index:** EDS, p0140	**Func. diagram:** -
P-Group: Encoder	**Unit group:** -	**Unit selection:** -
Not for motor type: -	**Scaling:** -	**Expert list:** 1
Min	**Max**	**Factory setting**
0	1000	4

Description: Sets the permissible tolerance in encoder pulses for the zero mark distance in the context of zero mark monitoring.
Causes fault F3x100 to appear less frequently.

Dependency: Refer to: p0430
Refer to: F31100
Note: The parameter is activated using p0430.21 = 1 (zero mark tolerance).

p4681[0...n] Zero mark monitoring tolerance window limit 1 positive / ZM tol lim 1 pos

SERVO_S110-DP, SERVO_S110-CAN, SERVO_S110-PN

Can be changed: C2(4)	**Calculated:** -	**Access level:** 3
Data type: Unsigned32	**Dyn. index:** EDS, p0140	**Func. diagram:** -
P-Group: Encoder	**Unit group:** -	**Unit selection:** -
Not for motor type: -	**Scaling:** -	**Expert list:** 1
Min	**Max**	**Factory setting**
0	1000	2

Description: Sets the positive tolerance window in encoder pulses for limit 1 for the zero mark monitoring.
If the deviation is less than this limit, the PPR is not corrected. If it is higher than this limit, fault F3x131 is triggered.
If fault F3x131 is re-parameterized to alarm (A) or no message (N), the encoder pulses which have not been corrected are added to the accumulator (p4688). The accumulator can be de-activated using p0437.7.
Dependency: Refer to: p0437, p4688
Refer to: F31131
Note: This monitoring is activated by setting p0437.2 = 1 (position actual value correction).
The positive limit describes additional pulses due to EMC.

p4682[0...n] Zero mark monitoring tolerance window limit 1 negative / ZM tol lim 1 neg

SERVO_S110-DP, SERVO_S110-CAN, SERVO_S110-PN

Can be changed: C2(4)	**Calculated:** -	**Access level:** 3
Data type: Integer32	**Dyn. index:** EDS, p0140	**Func. diagram:** -
P-Group: Encoder	**Unit group:** -	**Unit selection:** -
Not for motor type: -	**Scaling:** -	**Expert list:** 1
Min	**Max**	**Factory setting**
-1001	0	-1001

Description: Sets the negative tolerance window in encoder pulses for limit 1 for the zero mark monitoring.
If the deviation is less than this limit, the PPR is not corrected. If it is higher than this limit, fault F3x131 is triggered.
If fault F3x131 is re-parameterized to alarm (A) or no message (N), the encoder pulses which have not been corrected are added to the accumulator (p4688). The accumulator can be de-activated using p0437.7.
Dependency: Refer to: p0437, p4681, p4688
Refer to: F31131
Note: This monitoring is activated by setting p0437.2 = 1 (position actual value correction).
For a set value = -1001, the negated value of p4681 is effective.
The negative limit describes the pulses lost due to a covered glass panel in the incremental encoder.

p4683[0...n] Zero mark monitoring tolerance window alarm threshold positive / ZM tol A_thr pos

SERVO_S110-DP, SERVO_S110-CAN, SERVO_S110-PN

Can be changed: C2(4)	**Calculated:** -	**Access level:** 3
Data type: Unsigned32	**Dyn. index:** EDS, p0140	**Func. diagram:** -
P-Group: Encoder	**Unit group:** -	**Unit selection:** -
Not for motor type: -	**Scaling:** -	**Expert list:** 1
Min	**Max**	**Factory setting**
0	100000	0

Description: Sets the positive tolerance window in encoder pulses for limit 2 for the zero mark monitoring.
If the zero mark deviation is higher than the tolerance set in p4681 and p4682 and fault F3x131 is re-parameterized to alarm (A) or no message (N), the accumulator p4688 is compared with this parameter and, if applicable, alarm A3x422 is output for 5 seconds.
Dependency: Refer to: p0437, p4681, p4682, p4688
Refer to: F31131, A31422
Note: Zero mark monitoring is activated by setting p0437.2 = 1 (position actual value correction).

p4684[0...n] Zero mark monitoring tolerance window alarm threshold negative / ZM tol A_thr neg

SERVO_S110-DP, SERVO_S110-CAN, SERVO_S110-PN

Can be changed: C2(4)	**Calculated:** -	**Access level:** 3
Data type: Integer32	**Dyn. index:** EDS, p0140	**Func. diagram:** -
P-Group: Encoder	**Unit group:** -	**Unit selection:** -
Not for motor type: -	**Scaling:** -	**Expert list:** 1
Min	**Max**	**Factory setting**
-100001	0	-100001

Description: Sets the negative tolerance window in encoder pulses for limit 2 for the zero mark monitoring.
If the zero mark deviation is higher than the tolerance set in p4681 and p4682 and fault F3x131 is re-parameterized to alarm (A) or no message (N), the accumulator p4688 is compared with this parameter and, if applicable, alarm A3x422 is output for 5 seconds.

Dependency: Refer to: p0437, p4683, p4688
Refer to: F31131, A31422

Note: Zero mark monitoring is activated by setting p0437.2 = 1 (position actual value correction).
For a set value = -100001, the negated value of p4683 is effective.

p4685[0...n] Speed actual value mean value generation / n_act mean val

SERVO_S110-DP, SERVO_S110-CAN, SERVO_S110-PN

Can be changed: C2(4)	**Calculated:** -	**Access level:** 3
Data type: Unsigned32	**Dyn. index:** EDS, p0140	**Func. diagram:** -
P-Group: Encoder	**Unit group:** -	**Unit selection:** -
Not for motor type: -	**Scaling:** -	**Expert list:** 1
Min	**Max**	**Factory setting**
0	20	0

Description: Sets the number of current controller clock cycles for mean value generation of the speed actual value.

Note: Value = 0, 1: No mean value generation.
Higher values also mean higher dead times for the speed actual value.

p4686[0...n] Zero mark minimum length / ZM min length

SERVO_S110-DP, SERVO_S110-CAN, SERVO_S110-PN

Can be changed: C2(4)	**Calculated:** -	**Access level:** 3
Data type: Unsigned32	**Dyn. index:** EDS, p0140	**Func. diagram:** -
P-Group: Encoder	**Unit group:** -	**Unit selection:** -
Not for motor type: -	**Scaling:** -	**Expert list:** 1
Min	**Max**	**Factory setting**
0	10	1

Description: Sets the minimum length for the zero mark.

Dependency: Refer to: p0425, p0437

Note: The value for the minimum length of the zero mark must be set less than p0425.
The parameter is activated using p0437.1 = 1 (zero mark edge detection).

p4688[0...2] CO: Zero mark monitoring differential pulse count / ZM diff_pulse qty

SERVO_S110-DP, SERVO_S110-CAN, SERVO_S110-PN

Can be changed: T	**Calculated:** -	**Access level:** 3
Data type: Integer32	**Dyn. index:** -	**Func. diagram:** -
P-Group: -	**Unit group:** -	**Unit selection:** -
Not for motor type: -	**Scaling:** -	**Expert list:** 1
Min	**Max**	**Factory setting**
-2147483648	2147483647	0

Description: Displays the number of differential pulses for the zero mark monitoring that have accumulated.
If fault F3x131 is re-parameterized to alarm (A) or no message (N), the encoder pulses which have not been corrected are added to the accumulator (p4688).

Index: [0] = Encoder 1
[1] = Encoder 2
[2] = Reserved

Dependency: Refer to: p4681, p4682, p4683, p4684

Note: The display can only be reset to zero.

r4689[0...2] CO: Squarewave encoder diagnostics / Sq-wave enc diag

SERVO_S110-DP, SERVO_S110-CAN, SERVO_S110-PN

Can be changed: -	**Calculated:** -	**Access level:** 4
Data type: Unsigned32	**Dyn. index:** -	**Func. diagram:** -
P-Group: Encoder	**Unit group:** -	**Unit selection:** -
Not for motor type: -	**Scaling:** -	**Expert list:** 1
Min	**Max**	**Factory setting**
-	-	-

Description: Displays the encoder status according to PROFIdrive for a squarewave encoder.

Index: [0] = Encoder 1
[1] = Encoder 2
[2] = Reserved

Dependency: Refer to: A31422

Note: After alarm A3x422 is output, this parameter is set for 100 ms.

p4690 SMI spare part component number / SMI comp_no

CU_S110-DP, CU_S110-CAN, CU_S110-PN

Can be changed: T	**Calculated:** -	**Access level:** 1
Data type: Unsigned16	**Dyn. index:** -	**Func. diagram:** -
P-Group: Displays, signals	**Unit group:** -	**Unit selection:** -
Not for motor type: -	**Scaling:** -	**Expert list:** 1
Min	**Max**	**Factory setting**
0	399	0

Description: Sets the component number for the SMI/DQI for which motor and/or encoder data should be saved, deleted or downloaded.

Dependency: Refer to: p4691, p4692, p4693

Note: DQI: DRIVE-CLiQ Sensor Integrated
SMI: SINAMICS Sensor Module Integrated

p4691 SMI spare part save/download data / Save/DL SMI data

CU_S110-DP, CU_S110-CAN, CU_S110-PN

Can be changed: T	**Calculated:** -	**Access level:** 1
Data type: Integer16	**Dyn. index:** -	**Func. diagram:** -
P-Group: Displays, signals	**Unit group:** -	**Unit selection:** -
Not for motor type: -	**Scaling:** -	**Expert list:** 1
Min	**Max**	**Factory setting**
0	38	0

Description: Setting to save/download the data for the Sensor Module Integrated (SMI) specified in p4690.
Procedure:
p4690 = set component number
p4691 = 1, 2, 3, 30 set the required procedure (save/download/delete)
p4691 = 9, 10, 36 automatic on successful completion of the procedure
p4691 = 11... 22, 37, 38 --> error values if the procedure could not be executed

Value:
0: Inactive
1: Save SMI data
2: Download SMI data
3: Download SMI data from memory card
9: SMI data downloaded and POWER ON required for component
10: SMI data backup complete
11: SMI data backup for selected component not found
12: Selected component not available or not connected
13: Insufficient memory space for backup
14: Format of saved data is incompatible
15: Transfer fault during data download
16: Transfer fault during data backup
17: Data backup does not match parameterized encoder/motor
18: Data backup directory not permissible

19: Component already contains data
20: Component does not contain any data
21: Component is not an SMI or a DQI
22: SMI data cannot be downloaded for component
30: Delete SMI data
35: Confirmation of SMI data delete required
36: SMI data deleted and POWER ON required for component
37: Access level not sufficient for delete
38: Delete SMI data not permitted for component

Dependency: Refer to: p4690, p4692, p4693

Notice: Once SMI/DQI data has been deleted or downloaded successfully, the component has to be powered up.

Note: SMI: SINAMICS Sensor Module Integrated
DLQ encoder: DRIVE-CLiQ encoder
Help for error value = 11:
- Save the data for the original SMI on the memory card.
- Use an SMI with a suitable hardware version.
Help for error value = 12:
- Set the correct component number or connect the component.
Help for error value = 15:
- Check the DRIVE-CLiQ wiring for the component.
Help for error value = 16:
- Check the DRIVE-CLiQ wiring for the component.
Help for error value = 17:
- Save the data for the original SMI on the memory card.
Help for error value = 18:
- Set parameter p4693 to an appropriate value.
Help for error value = 19:
- Perform an SMI delete or use a blank SMI.
Help for error value = 20:
- Use an SMI that is not blank.
Help for error value = 21:
- Set the correct component number (p4690).
Note for error value = 22:
- Data cannot be downloaded for component.
Help for error value = 35:
- Reset parameter p4691 to 30.
Help for error value = 37:
- Set the access level to Expert or higher.
Help for error value = 38:
- Set the correct component number (p4690 >= 200).

p4692 SMI spare part save data of all SMIs / Save SMI data

CU_S110-DP, CU_S110-CAN, CU_S110-PN

Can be changed: T	**Calculated:** -	**Access level:** 1
Data type: Integer16	**Dyn. index:** -	**Func. diagram:** -
P-Group: Displays, signals	**Unit group:** -	**Unit selection:** -
Not for motor type: -	**Scaling:** -	**Expert list:** 1
Min	**Max**	**Factory setting**
0	29	0

Description: Setting to back up the data of all SMIs and DQIs featured in the target topology.

Value: 0: Inactive
1: Save data of all SMIs and DQIs
10: Save all data successful
13: Insufficient memory space for backup
16: Transfer fault during data backup
20: Component does not contain any data
29: Not all components from target topology saved

Note: SMI: SINAMICS Sensor Module Integrated
p4692 = 10: Automatic on successful completion of backup procedure.
p4692 = 13, 16, 20, 29: Error values if the procedure could not be executed successfully.
The procedure must be repeated if the data save operation was interrupted (e.g. if the power supply voltage failed).
Help for error value = 13:
- Use a memory card with more memory space.
Help for error value = 16:
- check the DRIVE-CLiQ wiring.
Help for error value = 20:
- Use an SMI that is not blank.
Help for error value = 29:
- Check and correct the target and actual topologies for the SMIs.
- Repeat the save procedure.

p4693[0...1] SMI spare part data backup directory/storage location / SMI bkup dir/loc

CU_S110-DP, CU_S110-CAN, CU_S110-PN

Can be changed: T	**Calculated:** -	**Access level:** 3
Data type: Unsigned16	**Dyn. index:** -	**Func. diagram:** -
P-Group: Displays, signals	**Unit group:** -	**Unit selection:** -
Not for motor type: -	**Scaling:** -	**Expert list:** 1
Min	**Max**	**Factory setting**
0	399	0

Description: Sets the directory and storage location for downloading and saving data.
Example:
The SMI has the component number 5 and the SMI data (motor/encoder data) is to be stored in subdirectory C205.
--> p4690 = 5, p4693[0] = 205, p4691 = 1

Index: [0] = Subdirectory selection
[1] = Memory location

Dependency: Refer to: p4691, r4694

Notice: If p4693[0] is not equal to 0 and p4693[0] is not equal to p4690, the following applies:
- Only a number >= 200 may be selected for the subdirectory when saving.
- In the case of downloads, a selection for the subdirectory may only be made for an SMI/DQI with a component number >= 200 (preliminary component number) (p4690 >= 200).

Note: SMI: SINAMICS Sensor Module Integrated
Re index 0:
This index is used to select the subdirectory for saving and downloading data; in the event of access to r4694 the motor order number (MLFB) of the corresponding data backup is displayed.
Re index 1:
This index is used to set the memory location for the subdirectory for downloading data and the display of the motor order number (MLFB).
0: Non-volatile device memory
1: Memory card (optional)

r4694[0...19] SMI spare part data backup motor order number / SMI dat_bkup MLFB

CU_S110-DP, CU_S110-CAN, CU_S110-PN

Can be changed: -	**Calculated:** -	**Access level:** 3
Data type: Unsigned8	**Dyn. index:** -	**Func. diagram:** -
P-Group: Displays, signals	**Unit group:** -	**Unit selection:** -
Not for motor type: -	**Scaling:** -	**Expert list:** 1
Min	**Max**	**Factory setting**
-	-	-

Description: Displays the motor order number (MLFB) of the data backup selected with p4693.

Dependency: Refer to: p4691, p4692

Caution: If the selected subdirectory contains a number of data sets, "More Datasets" is displayed in r4694[0...19].

If there is no SMI data (motor/encoder data) in the selected subdirectory or if the selected subdirectory does not exist, the following applies:

- The number of the next subdirectory located is displayed.
- This subdirectory is not checked for valid SMI data.
- If another subdirectory cannot be located, nothing is displayed in r4694[0...19].

Note: SMI: SINAMICS Sensor Module Integrated

p4700[0...1] Trace control / Trace control

CU_S110-DP, CU_S110-CAN, CU_S110-PN

Can be changed: U, T	**Calculated:** -	**Access level:** 3
Data type: Integer16	**Dyn. index:** -	**Func. diagram:** -
P-Group: Trace and function generator	**Unit group:** -	**Unit selection:** -
Not for motor type: -	**Scaling:** -	**Expert list:** 0
Min	**Max**	**Factory setting**
0	1	0

Description: Setting to control the trace function.

Value:
0: Stop trace
1: Start trace

Index:
[0] = Trace 0
[1] = Trace 1

p4701 Measuring function control / Meas fct ctrl

CU_S110-DP, CU_S110-CAN, CU_S110-PN

Can be changed: U, T	**Calculated:** -	**Access level:** 3
Data type: Integer16	**Dyn. index:** -	**Func. diagram:** -
P-Group: Trace and function generator	**Unit group:** -	**Unit selection:** -
Not for motor type: -	**Scaling:** -	**Expert list:** 0
Min	**Max**	**Factory setting**
0	3	0

Description: Setting to control the measurement function.

Value:
0: Stop measuring function
1: Start measuring function
2: Measuring function check parameterization
3: Start measuring function without enable signals

r4705[0...1] Trace status / Trace status

CU_S110-DP, CU_S110-CAN, CU_S110-PN

Can be changed: -	**Calculated:** -	**Access level:** 3
Data type: Integer16	**Dyn. index:** -	**Func. diagram:** -
P-Group: Trace and function generator	**Unit group:** -	**Unit selection:** -
Not for motor type: -	**Scaling:** -	**Expert list:** 0
Min	**Max**	**Factory setting**
0	4	-

Description: Displays the actual status of the trace.

Value:
0: Trace inactive
1: Trace is recording presamples
2: Trace is waiting for trigger event
3: Trace is recording
4: Recording (trace) ended

Index:
[0] = Trace 0
[1] = Trace 1

r4706 Measuring function status / Meas fct status

CU_S110-DP, CU_S110-CAN, CU_S110-PN

Can be changed: -	**Calculated:** -	**Access level:** 3
Data type: Integer16	**Dyn. index:** -	**Func. diagram:** -
P-Group: Trace and function generator	**Unit group:** -	**Unit selection:** -
Not for motor type: -	**Scaling:** -	**Expert list:** 0
Min	**Max**	**Factory setting**
0	5	-

Description: Displays the actual status of the measuring function.

Value:
0: Measurement function inactive
1: Measuring function parameterization checked
2: Measuring function waits for stabilizing time
3: Measuring function recording (tracing)
4: Measuring function trace ended with error
5: Measuring function trace successfully completed

p4707 Measurement function configuration / Meas fct config

CU_S110-DP, CU_S110-CAN, CU_S110-PN

Can be changed: U, T	**Calculated:** -	**Access level:** 4
Data type: Integer16	**Dyn. index:** -	**Func. diagram:** -
P-Group: -	**Unit group:** -	**Unit selection:** -
Not for motor type: -	**Scaling:** -	**Expert list:** 1
Min	**Max**	**Factory setting**
0	1	0

Description: Setting to configure the measurement function.

Value:
0: Standard
1: Free meas fct

Note: The parameter cannot be changed when the measurement function has been started (r4706 = 2, 3).
For value = 0:
The system injection point selected to inject the function generator signal is used.
For value = 1:
No system injection point is used.
When using the measuring function in the STARTER commissioning software, the following applies:
A change to a value only becomes effective after first closing and opening the measuring function screen form.
For value = 0:
The master control must be fetched.
There are two fixed and two freely selectable signals for recording.
For value = 1:
Master control does not have to be fetched.
There are four freely selectable signals for recording.

r4708[0...1] Trace memory space required / Trace mem required

CU_S110-DP, CU_S110-CAN, CU_S110-PN

Can be changed: -	**Calculated:** -	**Access level:** 3
Data type: Unsigned32	**Dyn. index:** -	**Func. diagram:** -
P-Group: Trace and function generator	**Unit group:** -	**Unit selection:** -
Not for motor type: -	**Scaling:** -	**Expert list:** 0
Min	**Max**	**Factory setting**
-	-	-

Description: Displays the required memory in bytes for the actual parameterization.

Index: [0] = Trace 0
[1] = Trace 1

Dependency: Refer to: r4799

r4709[0...1] Trace memory space required for measuring functions / Trace mem required

CU_S110-DP, CU_S110-CAN, CU_S110-PN

Can be changed: -	**Calculated:** -	**Access level:** 3
Data type: Unsigned32	**Dyn. index:** -	**Func. diagram:** -
P-Group: Trace and function generator	**Unit group:** -	**Unit selection:** -
Not for motor type: -	**Scaling:** -	**Expert list:** 0
Min	**Max**	**Factory setting**
-	-	-

Description: Displays the memory space required for the actual parameter setting in bytes, if the trace is used for the measuring functions.

Index: [0] = Trace 0
[1] = Trace 1

Dependency: Refer to: r4799

p4710[0...1] Trace trigger condition / Trace Trig_cond

CU_S110-DP, CU_S110-CAN, CU_S110-PN

Can be changed: U, T	**Calculated:** -	**Access level:** 3
Data type: Integer16	**Dyn. index:** -	**Func. diagram:** -
P-Group: Trace and function generator	**Unit group:** -	**Unit selection:** -
Not for motor type: -	**Scaling:** -	**Expert list:** 0
Min	**Max**	**Factory setting**
1	7	2

Description: Sets the trigger condition for the trace.

Value:
1: Immediate trace start
2: Positive edge
3: Negative edge
4: Entry to hysteresis band
5: Leaving hysteresis band
6: Trigger at bit mask
7: Start with function generator

Index: [0] = Trace 0
[1] = Trace 1

p4711[0...5] Trace trigger signal / Trace trig_signal

CU_S110-DP, CU_S110-CAN, CU_S110-PN

Can be changed: U, T	**Calculated:** -	**Access level:** 3
Data type: Unsigned32	**Dyn. index:** -	**Func. diagram:** -
P-Group: Trace and function generator	**Unit group:** -	**Unit selection:** -
Not for motor type: -	**Scaling:** -	**Expert list:** 0
Min	**Max**	**Factory setting**
-	-	0

Description: Selects the trigger signal for the trace.

Index: [0] = Trace 0 parameter in BICO format
[1] = Trace 1 parameter in BICO format
[2] = Trace 0 PINx with DO Id and chart Id
[3] = Trace 0 PINx with block Id and PIN Id
[4] = Trace 1 PINy with DO Id and chart Id
[5] = Trace 1 PINy with block Id and PIN Id

Dependency: Only effective when p4710 does not equal 1.

Note: It only makes sense to trace the PINs using the commissioning software.
For index 2(4) and 3(5) equal to zero, index 0(1) can only be written and vice versa.
Re index 0 ... 1:
Here, the trigger signal for trace 0 or 1 is entered as parameter in the BICO format.
For trace with a physical address (p4789), the data type of the trigger signal is set here.
Re index 2 ...3:
The triggering PIN for trace 0 is entered here.
Index 2 bit 31 ... 16: Number of the Drive Object (DO), bit 15 ... 0: Number of the chart
Index 3 bit 31 ... 16: Number of the block, bit 15 ... 0: Number of the PIN

Re index 4 ... 5:
The triggering PIN for trace 1 is entered here.
Index 4 bit 31 ... 16: Number of the Drive Object (DO), bit 15 ... 0: Number of the chart
Index 5 bit 31 ... 16: Number of the block, bit 15 ... 0: Number of the PIN

p4712[0...1] Trace trigger threshold / Trace trig_thresh

CU_S110-DP, CU_S110-CAN, CU_S110-PN

Can be changed: U, T	**Calculated:** -	**Access level:** 3
Data type: FloatingPoint32	**Dyn. index:** -	**Func. diagram:** -
P-Group: Trace and function generator	**Unit group:** -	**Unit selection:** -
Not for motor type: -	**Scaling:** -	**Expert list:** 0
Min	**Max**	**Factory setting**
-340.28235E36	340.28235E36	0.00

Description: Sets the trigger threshold for the trace.
Index: [0] = Trace 0
[1] = Trace 1
Dependency: Only effective when p4710 = 2, 3.

p4713[0...1] Trace tolerance band trigger threshold / Trace trig thresh

CU_S110-DP, CU_S110-CAN, CU_S110-PN

Can be changed: U, T	**Calculated:** -	**Access level:** 3
Data type: FloatingPoint32	**Dyn. index:** -	**Func. diagram:** -
P-Group: Trace and function generator	**Unit group:** -	**Unit selection:** -
Not for motor type: -	**Scaling:** -	**Expert list:** 0
Min	**Max**	**Factory setting**
-340.28235E36	340.28235E36	0.00

Description: Sets the first trigger threshold for trigger via tolerance band.
Index: [0] = Trace 0
[1] = Trace 1
Dependency: Only effective when p4710 = 4, 5.

p4714[0...1] Trace tolerance band trigger threshold / Trace trig thresh

CU_S110-DP, CU_S110-CAN, CU_S110-PN

Can be changed: U, T	**Calculated:** -	**Access level:** 3
Data type: FloatingPoint32	**Dyn. index:** -	**Func. diagram:** -
P-Group: Trace and function generator	**Unit group:** -	**Unit selection:** -
Not for motor type: -	**Scaling:** -	**Expert list:** 0
Min	**Max**	**Factory setting**
-340.28235E36	340.28235E36	0.00

Description: Sets the second trigger threshold for trigger via tolerance band
Index: [0] = Trace 0
[1] = Trace 1
Dependency: Only effective when p4710 = 4, 5.

p4715[0...1] Trace bit mask trigger, bit mask / Trace trig mask

CU_S110-DP, CU_S110-CAN, CU_S110-PN

Can be changed: U, T	**Calculated:** -	**Access level:** 3
Data type: Unsigned32	**Dyn. index:** -	**Func. diagram:** -
P-Group: Trace and function generator	**Unit group:** -	**Unit selection:** -
Not for motor type: -	**Scaling:** -	**Expert list:** 0
Min	**Max**	**Factory setting**
0	4294967295	0

Description: Sets the bit mask for the bit mask trigger.
Index: [0] = Trace 0
[1] = Trace 1
Dependency: Only effective when p4710 = 6.

p4716[0...1] Trace bit mask trigger trigger condition / Trace Trig_cond

CU_S110-DP, CU_S110-CAN, CU_S110-PN

Can be changed: U, T	**Calculated:** -	**Access level:** 3
Data type: Unsigned32	**Dyn. index:** -	**Func. diagram:** -
P-Group: Trace and function generator	**Unit group:** -	**Unit selection:** -
Not for motor type: -	**Scaling:** -	**Expert list:** 0
Min	**Max**	**Factory setting**
0	4294967295	0

Description: Sets the trigger condition for bit mask trigger.

Index: [0] = Trace 0
[1] = Trace 1

Dependency: Only effective when p4710 = 6.

p4717 Measuring function number of averaging operations / Meas fct avg qty

CU_S110-DP, CU_S110-CAN, CU_S110-PN

Can be changed: U, T	**Calculated:** -	**Access level:** 3
Data type: Unsigned8	**Dyn. index:** -	**Func. diagram:** -
P-Group: Trace and function generator	**Unit group:** -	**Unit selection:** -
Not for motor type: -	**Scaling:** -	**Expert list:** 0
Min	**Max**	**Factory setting**
0	255	0

Description: Sets the number of averaging operations for the measuring function.

p4718 Measuring function number of stabilizing periods / MeasFct StabPerQty

CU_S110-DP, CU_S110-CAN, CU_S110-PN

Can be changed: U, T	**Calculated:** -	**Access level:** 3
Data type: Unsigned8	**Dyn. index:** -	**Func. diagram:** -
P-Group: Trace and function generator	**Unit group:** -	**Unit selection:** -
Not for motor type: -	**Scaling:** -	**Expert list:** 0
Min	**Max**	**Factory setting**
0	255	0

Description: Sets the number of stabilizing periods for the measuring function.

r4719[0...1] Trace trigger index / Trace Trig_index

CU_S110-DP, CU_S110-CAN, CU_S110-PN

Can be changed: -	**Calculated:** -	**Access level:** 3
Data type: Unsigned32	**Dyn. index:** -	**Func. diagram:** -
P-Group: Trace and function generator	**Unit group:** -	**Unit selection:** -
Not for motor type: -	**Scaling:** -	**Expert list:** 0
Min	**Max**	**Factory setting**
-	-	-

Description: Displays the trigger index in the trace buffer. The trigger event occurred at this point.

Index: [0] = Trace 0
[1] = Trace 1

Dependency: Only valid when p4705 = 4.

p4720[0...1] Trace recording cycle / Trace record_cyc

CU_S110-DP, CU_S110-CAN, CU_S110-PN

Can be changed: U, T	**Calculated:** -	**Access level:** 3
Data type: FloatingPoint32	**Dyn. index:** -	**Func. diagram:** -
P-Group: Trace and function generator	**Unit group:** -	**Unit selection:** -
Not for motor type: -	**Scaling:** -	**Expert list:** 0
Min	**Max**	**Factory setting**
0.000 [ms]	60000.000 [ms]	1.000 [ms]

Description: Sets the recording cycle for the trace.

Index: [0] = Trace 0
[1] = Trace 1

p4721[0...1] Trace recording time / Trace record_time

CU_S110-DP, CU_S110-CAN, CU_S110-PN

Can be changed: U, T	**Calculated:** -	**Access level:** 3
Data type: FloatingPoint32	**Dyn. index:** -	**Func. diagram:** -
P-Group: Trace and function generator	**Unit group:** -	**Unit selection:** -
Not for motor type: -	**Scaling:** -	**Expert list:** 0
Min	**Max**	**Factory setting**
0.000 [ms]	3600000.000 [ms]	1000.000 [ms]

Description: Sets the recording time for the trace.

Index: [0] = Trace 0
[1] = Trace 1

p4722[0...1] Trace trigger delay / Trace trig_delay

CU_S110-DP, CU_S110-CAN, CU_S110-PN

Can be changed: U, T	**Calculated:** -	**Access level:** 3
Data type: FloatingPoint32	**Dyn. index:** -	**Func. diagram:** -
P-Group: Trace and function generator	**Unit group:** -	**Unit selection:** -
Not for motor type: -	**Scaling:** -	**Expert list:** 0
Min	**Max**	**Factory setting**
-3600000.000 [ms]	3600000.000 [ms]	0.000 [ms]

Description: Sets the trigger delay for the trace.
Trigger delay < 0:
Pretrigger: Tracing (recording) starts the selected time before the trigger event actually occurs.
Trigger delay > 0:
Post trigger: Tracing does not start until the set time after the trigger event.

Index: [0] = Trace 0
[1] = Trace 1

p4723[0...1] Trace time slice cycle / Trace cycle

CU_S110-DP, CU_S110-CAN, CU_S110-PN

Can be changed: U, T	**Calculated:** -	**Access level:** 3
Data type: FloatingPoint32	**Dyn. index:** -	**Func. diagram:** -
P-Group: Trace and function generator	**Unit group:** -	**Unit selection:** -
Not for motor type: -	**Scaling:** -	**Expert list:** 0
Min	**Max**	**Factory setting**
0.03125 [ms]	4.00000 [ms]	0.12500 [ms]

Description: Sets the time slice cycle in which the trace is called.

Index: [0] = Trace 0
[1] = Trace 1

p4724[0...1] Trace average in the time range / Trace average

CU_S110-DP, CU_S110-CAN, CU_S110-PN

Can be changed: U, T	**Calculated:** -	**Access level:** 3
Data type: Unsigned8	**Dyn. index:** -	**Func. diagram:** -
P-Group: Trace and function generator	**Unit group:** -	**Unit selection:** -
Not for motor type: -	**Scaling:** -	**Expert list:** 0
Min	**Max**	**Factory setting**
0000 bin	0001 bin	0000 bin

Index: [0] = Trace 0
[1] = Trace 1

r4725[0...1] Trace data type 1 traced / Trace rec type 1

CU_S110-DP, CU_S110-CAN, CU_S110-PN

Can be changed: - **Calculated:** - **Access level:** 3
Data type: Unsigned32 **Dyn. index:** - **Func. diagram:** -
P-Group: Trace and function generator **Unit group:** - **Unit selection:** -
Not for motor type: - **Scaling:** - **Expert list:** 0

Min	Max	Factory setting
-	-	-

Index: [0] = Trace 0
[1] = Trace 1

r4726[0...1] Trace data type 2 traced / Trace rec type 2

CU_S110-DP, CU_S110-CAN, CU_S110-PN

Can be changed: - **Calculated:** - **Access level:** 3
Data type: Unsigned32 **Dyn. index:** - **Func. diagram:** -
P-Group: Trace and function generator **Unit group:** - **Unit selection:** -
Not for motor type: - **Scaling:** - **Expert list:** 0

Min	Max	Factory setting
-	-	-

Index: [0] = Trace 0
[1] = Trace 1

r4727[0...1] Trace data type 3 traced / Trace rec type 3

CU_S110-DP, CU_S110-CAN, CU_S110-PN

Can be changed: - **Calculated:** - **Access level:** 3
Data type: Unsigned32 **Dyn. index:** - **Func. diagram:** -
P-Group: Trace and function generator **Unit group:** - **Unit selection:** -
Not for motor type: - **Scaling:** - **Expert list:** 0

Min	Max	Factory setting
-	-	-

Index: [0] = Trace 0
[1] = Trace 1

r4728[0...1] Trace data type 4 traced / Trace rec type 4

CU_S110-DP, CU_S110-CAN, CU_S110-PN

Can be changed: - **Calculated:** - **Access level:** 3
Data type: Unsigned32 **Dyn. index:** - **Func. diagram:** -
P-Group: Trace and function generator **Unit group:** - **Unit selection:** -
Not for motor type: - **Scaling:** - **Expert list:** 0

Min	Max	Factory setting
-	-	-

Index: [0] = Trace 0
[1] = Trace 1

r4729[0...1] Trace number of recorded values / Trace rec values

CU_S110-DP, CU_S110-CAN, CU_S110-PN

Can be changed: - **Calculated:** - **Access level:** 3
Data type: Unsigned32 **Dyn. index:** - **Func. diagram:** -
P-Group: Trace and function generator **Unit group:** - **Unit selection:** -
Not for motor type: - **Scaling:** - **Expert list:** 0

Min	Max	Factory setting
-	-	-

Description: Displays the number of traced values for each signal.
Index: [0] = Trace 0
[1] = Trace 1
Dependency: Only valid when p4705 = 4.

p4730[0...5] Trace record signal 0 / Trace record sig 0

CU_S110-DP, CU_S110-CAN, CU_S110-PN

Can be changed: U, T	**Calculated:** -	**Access level:** 3
Data type: Unsigned32	**Dyn. index:** -	**Func. diagram:** -
P-Group: Trace and function generator	**Unit group:** -	**Unit selection:** -
Not for motor type: -	**Scaling:** -	**Expert list:** 0
Min	**Max**	**Factory setting**
-	-	0

Description: Selects the first signal to be traced.

Index:
[0] = Trace 0 parameter in BICO format
[1] = Trace 1 parameter in BICO format
[2] = Trace 0 PINx with DO Id and chart Id
[3] = Trace 0 PINx with block Id and PIN Id
[4] = Trace 1 PINy with DO Id and chart Id
[5] = Trace 1 PINy with block Id and PIN Id

p4731[0...5] Trace record signal 1 / Trace record sig 1

CU_S110-DP, CU_S110-CAN, CU_S110-PN

Can be changed: U, T	**Calculated:** -	**Access level:** 3
Data type: Unsigned32	**Dyn. index:** -	**Func. diagram:** -
P-Group: Trace and function generator	**Unit group:** -	**Unit selection:** -
Not for motor type: -	**Scaling:** -	**Expert list:** 0
Min	**Max**	**Factory setting**
-	-	0

Description: Selects the second signal to be traced.

Index:
[0] = Trace 0 parameter in BICO format
[1] = Trace 1 parameter in BICO format
[2] = Trace 0 PINx with DO Id and chart Id
[3] = Trace 0 PINx with block Id and PIN Id
[4] = Trace 1 PINy with DO Id and chart Id
[5] = Trace 1 PINy with block Id and PIN Id

p4732[0...5] Trace record signal 2 / Trace record sig 2

CU_S110-DP, CU_S110-CAN, CU_S110-PN

Can be changed: U, T	**Calculated:** -	**Access level:** 3
Data type: Unsigned32	**Dyn. index:** -	**Func. diagram:** -
P-Group: Trace and function generator	**Unit group:** -	**Unit selection:** -
Not for motor type: -	**Scaling:** -	**Expert list:** 0
Min	**Max**	**Factory setting**
-	-	0

Description: Selects the third signal to be traced.

Index:
[0] = Trace 0 parameter in BICO format
[1] = Trace 1 parameter in BICO format
[2] = Trace 0 PINx with DO Id and chart Id
[3] = Trace 0 PINx with block Id and PIN Id
[4] = Trace 1 PINy with DO Id and chart Id
[5] = Trace 1 PINy with block Id and PIN Id

p4733[0...5] Trace record signal 3 / Trace record sig 3

CU_S110-DP, CU_S110-CAN, CU_S110-PN

Can be changed: U, T	**Calculated:** -	**Access level:** 3
Data type: Unsigned32	**Dyn. index:** -	**Func. diagram:** -
P-Group: Trace and function generator	**Unit group:** -	**Unit selection:** -
Not for motor type: -	**Scaling:** -	**Expert list:** 0
Min	**Max**	**Factory setting**
-	-	0

Description: Selects the fourth signal to be traced.

Index: [0] = Trace 0 parameter in BICO format
[1] = Trace 1 parameter in BICO format
[2] = Trace 0 PINx with DO Id and chart Id
[3] = Trace 0 PINx with block Id and PIN Id
[4] = Trace 1 PINy with DO Id and chart Id
[5] = Trace 1 PINy with block Id and PIN Id

p4734[0...5] Trace record signal 4 / Trace record sig 4

CU_S110-DP, CU_S110-CAN, CU_S110-PN

Can be changed: U, T	**Calculated:** -	**Access level:** 3
Data type: Unsigned32	**Dyn. index:** -	**Func. diagram:** -
P-Group: Trace and function generator	**Unit group:** -	**Unit selection:** -
Not for motor type: -	**Scaling:** -	**Expert list:** 0
Min	**Max**	**Factory setting**
-	-	0

Description: Selects the fifth signal to be traced.

Index: [0] = Trace 0 parameter in BICO format
[1] = Trace 1 parameter in BICO format
[2] = Trace 0 PINx with DO Id and chart Id
[3] = Trace 0 PINx with block Id and PIN Id
[4] = Trace 1 PINy with DO Id and chart Id
[5] = Trace 1 PINy with block Id and PIN Id

p4735[0...5] Trace record signal 5 / Trace record sig 5

CU_S110-DP, CU_S110-CAN, CU_S110-PN

Can be changed: U, T	**Calculated:** -	**Access level:** 3
Data type: Unsigned32	**Dyn. index:** -	**Func. diagram:** -
P-Group: Trace and function generator	**Unit group:** -	**Unit selection:** -
Not for motor type: -	**Scaling:** -	**Expert list:** 0
Min	**Max**	**Factory setting**
-	-	0

Description: Selects the sixth signal to be traced.

Index: [0] = Trace 0 parameter in BICO format
[1] = Trace 1 parameter in BICO format
[2] = Trace 0 PINx with DO Id and chart Id
[3] = Trace 0 PINx with block Id and PIN Id
[4] = Trace 1 PINy with DO Id and chart Id
[5] = Trace 1 PINy with block Id and PIN Id

p4736[0...5] Trace record signal 6 / Trace record sig 6

CU_S110-DP, CU_S110-CAN, CU_S110-PN

Can be changed: U, T	**Calculated:** -	**Access level:** 3
Data type: Unsigned32	**Dyn. index:** -	**Func. diagram:** -
P-Group: Trace and function generator	**Unit group:** -	**Unit selection:** -
Not for motor type: -	**Scaling:** -	**Expert list:** 0
Min	**Max**	**Factory setting**
-	-	0

Description: Selects the seventh signal to be traced.

Index: [0] = Trace 0 parameter in BICO format
[1] = Trace 1 parameter in BICO format
[2] = Trace 0 PINx with DO Id and chart Id
[3] = Trace 0 PINx with block Id and PIN Id
[4] = Trace 1 PINy with DO Id and chart Id
[5] = Trace 1 PINy with block Id and PIN Id

p4737[0...5] Trace record signal 7 / Trace record sig 7

CU_S110-DP, CU_S110-CAN, CU_S110-PN

Can be changed: U, T	**Calculated:** -	**Access level:** 3
Data type: Unsigned32	**Dyn. index:** -	**Func. diagram:** -
P-Group: Trace and function generator	**Unit group:** -	**Unit selection:** -
Not for motor type: -	**Scaling:** -	**Expert list:** 0
Min	**Max**	**Factory setting**
-	-	0

Description: Selects the eighth signal to be traced.

Index:
[0] = Trace 0 parameter in BICO format
[1] = Trace 1 parameter in BICO format
[2] = Trace 0 PINx with DO Id and chart Id
[3] = Trace 0 PINx with block Id and PIN Id
[4] = Trace 1 PINy with DO Id and chart Id
[5] = Trace 1 PINy with block Id and PIN Id

r4740[0...16383] Trace 0 trace buffer signal 0 floating point / Trace 0 tr sig 0

CU_S110-DP, CU_S110-CAN, CU_S110-PN

Can be changed: -	**Calculated:** -	**Access level:** 3
Data type: FloatingPoint32	**Dyn. index:** -	**Func. diagram:** -
P-Group: Trace and function generator	**Unit group:** -	**Unit selection:** -
Not for motor type: -	**Scaling:** -	**Expert list:** 0
Min	**Max**	**Factory setting**
-	-	-

Description: Displays the trace buffer (record buffer) for trace 0 and signal 0.

The trace (record) buffer is sub-divided into memory banks, each containing 16384 values. Parameter p4795 can be used to toggle between the individual banks.

Example A:

The first 16384 values of signal 0, trace 0 are to be read out.

In this case, memory bank 0 is set with p4795 = 0. The first 16384 values can now be read out using r4740[0] to r4740[16383].

Example B:

The values 16385 to 32768 from signal 0, trace 0 are to be read out.

In this case, memory bank 1 is set with p4795 = 1. The values can now be read out in r4740[0] to r4740[16383].

Dependency: Refer to: p4795

r4741[0...16383] Trace 0 trace buffer signal 1 floating point / Trace 0 tr sig 1

CU_S110-DP, CU_S110-CAN, CU_S110-PN

Can be changed: -	**Calculated:** -	**Access level:** 3
Data type: FloatingPoint32	**Dyn. index:** -	**Func. diagram:** -
P-Group: Trace and function generator	**Unit group:** -	**Unit selection:** -
Not for motor type: -	**Scaling:** -	**Expert list:** 0
Min	**Max**	**Factory setting**
-	-	-

Description: Displays the trace buffer (record buffer) for trace 0 and signal 1.

Dependency: Refer to: r4740, p4795

r4742[0...16383] Trace 0 trace buffer signal 2 floating point / Trace 0 tr sig 2

CU_S110-DP, CU_S110-CAN, CU_S110-PN

Can be changed: -	**Calculated:** -	**Access level:** 3
Data type: FloatingPoint32	**Dyn. index:** -	**Func. diagram:** -
P-Group: Trace and function generator	**Unit group:** -	**Unit selection:** -
Not for motor type: -	**Scaling:** -	**Expert list:** 0
Min	**Max**	**Factory setting**
-	-	-

Description: Displays the trace buffer (record buffer) for trace 0 and signal 2.

Dependency: Refer to: r4740, p4795

r4743[0...16383] Trace 0 trace buffer signal 3 floating point / Trace 0 tr sig 3

CU_S110-DP, CU_S110-CAN, CU_S110-PN

Can be changed: -	**Calculated:** -	**Access level:** 3
Data type: FloatingPoint32	**Dyn. index:** -	**Func. diagram:** -
P-Group: Trace and function generator	**Unit group:** -	**Unit selection:** -
Not for motor type: -	**Scaling:** -	**Expert list:** 0
Min	**Max**	**Factory setting**
-	-	-

Description: Displays the trace buffer (record buffer) for trace 0 and signal 3.
Dependency: Refer to: r4740, p4795

r4744[0...16383] Trace 0 trace buffer signal 4 floating point / Trace 0 tr sig 4

CU_S110-DP, CU_S110-CAN, CU_S110-PN

Can be changed: -	**Calculated:** -	**Access level:** 3
Data type: FloatingPoint32	**Dyn. index:** -	**Func. diagram:** -
P-Group: Trace and function generator	**Unit group:** -	**Unit selection:** -
Not for motor type: -	**Scaling:** -	**Expert list:** 0
Min	**Max**	**Factory setting**
-	-	-

Description: Displays the trace buffer (record buffer) for trace 0 and signal 4.
Dependency: Refer to: r4740, p4795

r4745[0...16383] Trace 0 trace buffer signal 5 floating point / Trace 0 tr sig 5

CU_S110-DP, CU_S110-CAN, CU_S110-PN

Can be changed: -	**Calculated:** -	**Access level:** 3
Data type: FloatingPoint32	**Dyn. index:** -	**Func. diagram:** -
P-Group: Trace and function generator	**Unit group:** -	**Unit selection:** -
Not for motor type: -	**Scaling:** -	**Expert list:** 0
Min	**Max**	**Factory setting**
-	-	-

Description: Displays the trace buffer (record buffer) for trace 0 and signal 5.
Dependency: Refer to: r4740, p4795

r4746[0...16383] Trace 0 trace buffer signal 6 floating point / Trace 0 tr sig 6

CU_S110-DP, CU_S110-CAN, CU_S110-PN

Can be changed: -	**Calculated:** -	**Access level:** 3
Data type: FloatingPoint32	**Dyn. index:** -	**Func. diagram:** -
P-Group: Trace and function generator	**Unit group:** -	**Unit selection:** -
Not for motor type: -	**Scaling:** -	**Expert list:** 0
Min	**Max**	**Factory setting**
-	-	-

Description: Displays the trace buffer (record buffer) for trace 0 and signal 6.
Dependency: Refer to: r4740, p4795

r4747[0...16383] Trace 0 trace buffer signal 7 floating point / Trace 0 tr sig 7

CU_S110-DP, CU_S110-CAN, CU_S110-PN

Can be changed: -	**Calculated:** -	**Access level:** 3
Data type: FloatingPoint32	**Dyn. index:** -	**Func. diagram:** -
P-Group: Trace and function generator	**Unit group:** -	**Unit selection:** -
Not for motor type: -	**Scaling:** -	**Expert list:** 0
Min	**Max**	**Factory setting**
-	-	-

Description: Displays the trace buffer (record buffer) for trace 0 and signal 7.
Dependency: Refer to: r4740, p4795

r4750[0...16383] Trace 1 trace buffer signal 0 floating point / Trace 1 tr sig 0

CU_S110-DP, CU_S110-CAN, CU_S110-PN

Can be changed: - **Calculated:** - **Access level:** 3
Data type: FloatingPoint32 **Dyn. index:** - **Func. diagram:** -
P-Group: Trace and function generator **Unit group:** - **Unit selection:** -
Not for motor type: - **Scaling:** - **Expert list:** 0

Min	Max	Factory setting
-	-	-

Description: Displays the trace buffer (record buffer) for trace 1 and signal 0.
Dependency: Refer to: r4740, p4795

r4751[0...16383] Trace 1 trace buffer signal 1 floating point / Trace 1 tr sig 1

CU_S110-DP, CU_S110-CAN, CU_S110-PN

Can be changed: - **Calculated:** - **Access level:** 3
Data type: FloatingPoint32 **Dyn. index:** - **Func. diagram:** -
P-Group: Trace and function generator **Unit group:** - **Unit selection:** -
Not for motor type: - **Scaling:** - **Expert list:** 0

Min	Max	Factory setting
-	-	-

Description: Displays the trace buffer (record buffer) for trace 1 and signal 1.
Dependency: Refer to: r4740, p4795

r4752[0...16383] Trace 1 trace buffer signal 2 floating point / Trace 1 tr sig 2

CU_S110-DP, CU_S110-CAN, CU_S110-PN

Can be changed: - **Calculated:** - **Access level:** 3
Data type: FloatingPoint32 **Dyn. index:** - **Func. diagram:** -
P-Group: Trace and function generator **Unit group:** - **Unit selection:** -
Not for motor type: - **Scaling:** - **Expert list:** 0

Min	Max	Factory setting
-	-	-

Description: Displays the trace buffer (record buffer) for trace 1 and signal 2.
Dependency: Refer to: r4740, p4795

r4753[0...16383] Trace 1 trace buffer signal 3 floating point / Trace 1 tr sig 3

CU_S110-DP, CU_S110-CAN, CU_S110-PN

Can be changed: - **Calculated:** - **Access level:** 3
Data type: FloatingPoint32 **Dyn. index:** - **Func. diagram:** -
P-Group: Trace and function generator **Unit group:** - **Unit selection:** -
Not for motor type: - **Scaling:** - **Expert list:** 0

Min	Max	Factory setting
-	-	-

Description: Displays the trace buffer (record buffer) for trace 1 and signal 3.
Dependency: Refer to: r4740, p4795

r4754[0...16383] Trace 1 trace buffer signal 4 floating point / Trace 1 tr sig 4

CU_S110-DP, CU_S110-CAN, CU_S110-PN

Can be changed: - **Calculated:** - **Access level:** 3
Data type: FloatingPoint32 **Dyn. index:** - **Func. diagram:** -
P-Group: Trace and function generator **Unit group:** - **Unit selection:** -
Not for motor type: - **Scaling:** - **Expert list:** 0

Min	Max	Factory setting
-	-	-

Description: Displays the trace buffer (record buffer) for trace 1 and signal 4.
Dependency: Refer to: r4740, p4795

r4755[0...16383] Trace 1 trace buffer signal 5 floating point / Trace 1 tr sig 5

CU_S110-DP, CU_S110-CAN, CU_S110-PN

Can be changed: -	**Calculated:** -	**Access level:** 3
Data type: FloatingPoint32	**Dyn. index:** -	**Func. diagram:** -
P-Group: Trace and function generator	**Unit group:** -	**Unit selection:** -
Not for motor type: -	**Scaling:** -	**Expert list:** 0
Min	**Max**	**Factory setting**
-	-	-

Description: Displays the trace buffer (record buffer) for trace 1 and signal 5.

Dependency: Refer to: r4740, p4795

r4756[0...16383] Trace 1 trace buffer signal 6 floating point / Trace 1 tr sig 6

CU_S110-DP, CU_S110-CAN, CU_S110-PN

Can be changed: -	**Calculated:** -	**Access level:** 3
Data type: FloatingPoint32	**Dyn. index:** -	**Func. diagram:** -
P-Group: Trace and function generator	**Unit group:** -	**Unit selection:** -
Not for motor type: -	**Scaling:** -	**Expert list:** 0
Min	**Max**	**Factory setting**
-	-	-

Description: Displays the trace buffer (record buffer) for trace 1 and signal 6.

Dependency: Refer to: r4740, p4795

r4757[0...16383] Trace 1 trace buffer signal 7 floating point / Trace 1 tr sig 7

CU_S110-DP, CU_S110-CAN, CU_S110-PN

Can be changed: -	**Calculated:** -	**Access level:** 3
Data type: FloatingPoint32	**Dyn. index:** -	**Func. diagram:** -
P-Group: Trace and function generator	**Unit group:** -	**Unit selection:** -
Not for motor type: -	**Scaling:** -	**Expert list:** 0
Min	**Max**	**Factory setting**
-	-	-

Description: Displays the trace buffer (record buffer) for trace 1 and signal 7.

Dependency: Refer to: r4740, p4795

r4760[0...16383] Trace 0 trace buffer signal 0 / Trace 0 tr sig 0

CU_S110-DP, CU_S110-CAN, CU_S110-PN

Can be changed: -	**Calculated:** -	**Access level:** 3
Data type: Unsigned32	**Dyn. index:** -	**Func. diagram:** -
P-Group: Trace and function generator	**Unit group:** -	**Unit selection:** -
Not for motor type: -	**Scaling:** -	**Expert list:** 0
Min	**Max**	**Factory setting**
-	-	-

Description: Displays the trace buffer (record buffer) for trace 0 and signal 0 as integer number.

Note: For signals, data type I32 or U32, the trace buffer is assigned as follows:
r4760[0] = value 0
r4760[1] = value 1
...
r4760[8191] = value 8191
For signals, data type I16 or U16, the trace buffer is assigned as follows:
r4760[0] = value 0 (bit 31 ... 16) and value 1 (bit 15 ... 0)
r4760[1] = value 2 (bit 31 ... 16) and value 3 (bit 15 ... 0)
...
r4760[8191] = value 16382 (bit 31 ... 16) and value 16383 (bit 15 ... 0)

For signals, data type I8 or U8, the trace buffer is assigned as follows:
r4760[0] = value 0 (bit 31 ... 24) value 1 (bit 23 ... 16) value 2 (bit 15 ... 8) value 3 (bit 7 ... 0)
r4760[1] = value 4 (bit 31 ... 24) value 5 (bit 23 ... 16) value 6 (bit 15 ... 8) value 7 (bit 7 ... 0)
...
r4760[8191] = value 32764 (bit 31 ... 24) value 32765 (bit 23 ... 16) value 32766 (bit 15 ... 8) value 32767 (bit 7 ... 0)

r4761[0...16383] Trace 0 trace buffer signal 1 / Trace 0 tr sig 1

CU_S110-DP, CU_S110-CAN, CU_S110-PN

Can be changed: -	**Calculated:** -	**Access level:** 3
Data type: Unsigned32	**Dyn. index:** -	**Func. diagram:** -
P-Group: Trace and function generator	**Unit group:** -	**Unit selection:** -
Not for motor type: -	**Scaling:** -	**Expert list:** 0
Min	**Max**	**Factory setting**
-	-	-

Description: Displays the trace buffer (record buffer) for trace 0 and signal 1.
Dependency: Refer to: r4760

r4762[0...16383] Trace 0 trace buffer signal 2 / Trace 0 tr sig 2

CU_S110-DP, CU_S110-CAN, CU_S110-PN

Can be changed: -	**Calculated:** -	**Access level:** 3
Data type: Unsigned32	**Dyn. index:** -	**Func. diagram:** -
P-Group: Trace and function generator	**Unit group:** -	**Unit selection:** -
Not for motor type: -	**Scaling:** -	**Expert list:** 0
Min	**Max**	**Factory setting**
-	-	-

Description: Displays the trace buffer (record buffer) for trace 0 and signal 2.
Dependency: Refer to: r4760

r4763[0...16383] Trace 0 trace buffer signal 3 / Trace 0 tr sig 3

CU_S110-DP, CU_S110-CAN, CU_S110-PN

Can be changed: -	**Calculated:** -	**Access level:** 3
Data type: Unsigned32	**Dyn. index:** -	**Func. diagram:** -
P-Group: Trace and function generator	**Unit group:** -	**Unit selection:** -
Not for motor type: -	**Scaling:** -	**Expert list:** 0
Min	**Max**	**Factory setting**
-	-	-

Description: Displays the trace buffer (record buffer) for trace 0 and signal 3.
Dependency: Refer to: r4760

r4764[0...16383] Trace 0 trace buffer signal 4 / Trace 0 tr sig 4

CU_S110-DP, CU_S110-CAN, CU_S110-PN

Can be changed: -	**Calculated:** -	**Access level:** 3
Data type: Unsigned32	**Dyn. index:** -	**Func. diagram:** -
P-Group: Trace and function generator	**Unit group:** -	**Unit selection:** -
Not for motor type: -	**Scaling:** -	**Expert list:** 0
Min	**Max**	**Factory setting**
-	-	-

Description: Displays the trace buffer (record buffer) for trace 0 and signal 4.
Dependency: Refer to: r4760

r4765[0...16383] Trace 0 trace buffer signal 5 / Trace 0 tr sig 5

CU_S110-DP, CU_S110-CAN, CU_S110-PN

Can be changed: -	**Calculated:** -	**Access level:** 3
Data type: Unsigned32	**Dyn. index:** -	**Func. diagram:** -
P-Group: Trace and function generator	**Unit group:** -	**Unit selection:** -
Not for motor type: -	**Scaling:** -	**Expert list:** 0
Min	**Max**	**Factory setting**
-	-	-

Description: Displays the trace buffer (record buffer) for trace 0 and signal 5.
Dependency: Refer to: r4760

r4766[0...16383] Trace 0 trace buffer signal 6 / Trace 0 tr sig 6

CU_S110-DP, CU_S110-CAN, CU_S110-PN

Can be changed: -	**Calculated:** -	**Access level:** 3
Data type: Unsigned32	**Dyn. index:** -	**Func. diagram:** -
P-Group: Trace and function generator	**Unit group:** -	**Unit selection:** -
Not for motor type: -	**Scaling:** -	**Expert list:** 0
Min	**Max**	**Factory setting**
-	-	-

Description: Displays the trace buffer (record buffer) for trace 0 and signal 6.
Dependency: Refer to: r4760

r4767[0...16383] Trace 0 trace buffer signal 7 / Trace 0 tr sig 7

CU_S110-DP, CU_S110-CAN, CU_S110-PN

Can be changed: -	**Calculated:** -	**Access level:** 3
Data type: Unsigned32	**Dyn. index:** -	**Func. diagram:** -
P-Group: Trace and function generator	**Unit group:** -	**Unit selection:** -
Not for motor type: -	**Scaling:** -	**Expert list:** 0
Min	**Max**	**Factory setting**
-	-	-

Description: Displays the trace buffer (record buffer) for trace 0 and signal 7.
Dependency: Refer to: r4760

r4770[0...16383] Trace 1 trace buffer signal 0 / Trace 1 tr sig 0

CU_S110-DP, CU_S110-CAN, CU_S110-PN

Can be changed: -	**Calculated:** -	**Access level:** 3
Data type: Unsigned32	**Dyn. index:** -	**Func. diagram:** -
P-Group: Trace and function generator	**Unit group:** -	**Unit selection:** -
Not for motor type: -	**Scaling:** -	**Expert list:** 0
Min	**Max**	**Factory setting**
-	-	-

Description: Displays the trace buffer (record buffer) for trace 1 and signal 0.
Dependency: Refer to: r4760

r4771[0...16383] Trace 1 trace buffer signal 1 / Trace 1 tr sig 1

CU_S110-DP, CU_S110-CAN, CU_S110-PN

Can be changed: -	**Calculated:** -	**Access level:** 3
Data type: Unsigned32	**Dyn. index:** -	**Func. diagram:** -
P-Group: Trace and function generator	**Unit group:** -	**Unit selection:** -
Not for motor type: -	**Scaling:** -	**Expert list:** 0
Min	**Max**	**Factory setting**
-	-	-

Description: Displays the trace buffer (record buffer) for trace 1 and signal 1.
Dependency: Refer to: r4760

r4772[0...16383] Trace 1 trace buffer signal 2 / Trace 1 tr sig 2

CU_S110-DP, CU_S110-CAN, CU_S110-PN

Can be changed: -	**Calculated:** -	**Access level:** 3
Data type: Unsigned32	**Dyn. index:** -	**Func. diagram:** -
P-Group: Trace and function generator	**Unit group:** -	**Unit selection:** -
Not for motor type: -	**Scaling:** -	**Expert list:** 0
Min	**Max**	**Factory setting**
-	-	-

Description: Displays the trace buffer (record buffer) for trace 1 and signal 2.
Dependency: Refer to: r4760

r4773[0...16383] Trace 1 trace buffer signal 3 / Trace 1 tr sig 3

CU_S110-DP, CU_S110-CAN, CU_S110-PN

Can be changed: -	**Calculated:** -	**Access level:** 3
Data type: Unsigned32	**Dyn. index:** -	**Func. diagram:** -
P-Group: Trace and function generator	**Unit group:** -	**Unit selection:** -
Not for motor type: -	**Scaling:** -	**Expert list:** 0
Min	**Max**	**Factory setting**
-	-	-

Description: Displays the trace buffer (record buffer) for trace 1 and signal 3.
Dependency: Refer to: r4760

r4774[0...16383] Trace 1 trace buffer signal 4 / Trace 1 tr sig 4

CU_S110-DP, CU_S110-CAN, CU_S110-PN

Can be changed: -	**Calculated:** -	**Access level:** 3
Data type: Unsigned32	**Dyn. index:** -	**Func. diagram:** -
P-Group: Trace and function generator	**Unit group:** -	**Unit selection:** -
Not for motor type: -	**Scaling:** -	**Expert list:** 0
Min	**Max**	**Factory setting**
-	-	-

Description: Displays the trace buffer (record buffer) for trace 1 and signal 4.
Dependency: Refer to: r4760

r4775[0...16383] Trace 1 trace buffer signal 5 / Trace 1 tr sig 5

CU_S110-DP, CU_S110-CAN, CU_S110-PN

Can be changed: -	**Calculated:** -	**Access level:** 3
Data type: Unsigned32	**Dyn. index:** -	**Func. diagram:** -
P-Group: Trace and function generator	**Unit group:** -	**Unit selection:** -
Not for motor type: -	**Scaling:** -	**Expert list:** 0
Min	**Max**	**Factory setting**
-	-	-

Description: Displays the trace buffer (record buffer) for trace 1 and signal 5.
Dependency: Refer to: r4760

r4776[0...16383] Trace 1 trace buffer signal 6 / Trace 1 tr sig 6

CU_S110-DP, CU_S110-CAN, CU_S110-PN

Can be changed: -	**Calculated:** -	**Access level:** 3
Data type: Unsigned32	**Dyn. index:** -	**Func. diagram:** -
P-Group: Trace and function generator	**Unit group:** -	**Unit selection:** -
Not for motor type: -	**Scaling:** -	**Expert list:** 0
Min	**Max**	**Factory setting**
-	-	-

Description: Displays the trace buffer (record buffer) for trace 1 and signal 6.
Dependency: Refer to: r4760

r4777[0...16383] Trace 1 trace buffer signal 7 / Trace 1 tr sig 7

CU_S110-DP, CU_S110-CAN, CU_S110-PN

Can be changed: -	**Calculated:** -	**Access level:** 3
Data type: Unsigned32	**Dyn. index:** -	**Func. diagram:** -
P-Group: Trace and function generator	**Unit group:** -	**Unit selection:** -
Not for motor type: -	**Scaling:** -	**Expert list:** 0
Min	**Max**	**Factory setting**
-	-	-

Description: Displays the trace buffer (record buffer) for trace 1 and signal 7.

Dependency: Refer to: r4760

p4780[0...1] Trace physical address signal 0 / Trace PhyAddr Sig0

CU_S110-DP, CU_S110-CAN, CU_S110-PN

Can be changed: U, T	**Calculated:** -	**Access level:** 3
Data type: Unsigned32	**Dyn. index:** -	**Func. diagram:** -
P-Group: Trace and function generator	**Unit group:** -	**Unit selection:** -
Not for motor type: -	**Scaling:** -	**Expert list:** 0
Min	**Max**	**Factory setting**
0000 bin	1111 1111 1111 1111 1111 1111 1111 1111 bin	0000 bin

Description: Sets the physical address for the first signal to be traced.
The data type is defined using p4730.

Index: [0] = Trace 0
[1] = Trace 1

p4781[0...1] Trace physical address signal 1 / Trace PhyAddr Sig1

CU_S110-DP, CU_S110-CAN, CU_S110-PN

Can be changed: U, T	**Calculated:** -	**Access level:** 3
Data type: Unsigned32	**Dyn. index:** -	**Func. diagram:** -
P-Group: Trace and function generator	**Unit group:** -	**Unit selection:** -
Not for motor type: -	**Scaling:** -	**Expert list:** 0
Min	**Max**	**Factory setting**
0000 bin	1111 1111 1111 1111 1111 1111 1111 1111 bin	0000 bin

Description: Sets the physical address for the second signal to be traced.
The data type is defined using p4731.

Index: [0] = Trace 0
[1] = Trace 1

p4782[0...1] Trace physical address signal 2 / Trace PhyAddr Sig2

CU_S110-DP, CU_S110-CAN, CU_S110-PN

Can be changed: U, T	**Calculated:** -	**Access level:** 3
Data type: Unsigned32	**Dyn. index:** -	**Func. diagram:** -
P-Group: Trace and function generator	**Unit group:** -	**Unit selection:** -
Not for motor type: -	**Scaling:** -	**Expert list:** 0
Min	**Max**	**Factory setting**
0000 bin	1111 1111 1111 1111 1111 1111 1111 1111 bin	0000 bin

Description: Sets the physical address for the third signal to be traced.
The data type is defined using p4732.

Index: [0] = Trace 0
[1] = Trace 1

p4783[0...1] Trace physical address signal 3 / Trace PhyAddr Sig3

CU_S110-DP, CU_S110-CAN, CU_S110-PN

Can be changed: U, T | **Calculated:** - | **Access level:** 3
Data type: Unsigned32 | **Dyn. index:** - | **Func. diagram:** -
P-Group: Trace and function generator | **Unit group:** - | **Unit selection:** -
Not for motor type: - | **Scaling:** - | **Expert list:** 0

Min	Max	Factory setting
0000 bin	1111 1111 1111 1111 1111 1111 1111 1111 bin	0000 bin

Description: Sets the physical address for the fourth signal to be traced.
The data type is defined using p4733.

Index: [0] = Trace 0
[1] = Trace 1

p4784[0...1] Trace physical address signal 4 / Trace PhyAddr Sig4

CU_S110-DP, CU_S110-CAN, CU_S110-PN

Can be changed: U, T | **Calculated:** - | **Access level:** 3
Data type: Unsigned32 | **Dyn. index:** - | **Func. diagram:** -
P-Group: Trace and function generator | **Unit group:** - | **Unit selection:** -
Not for motor type: - | **Scaling:** - | **Expert list:** 0

Min	Max	Factory setting
0000 bin	1111 1111 1111 1111 1111 1111 1111 1111 bin	0000 bin

Description: Sets the physical address for the fifth signal to be traced.
The data type is defined using p4734.

Index: [0] = Trace 0
[1] = Trace 1

p4785[0...1] Trace physical address signal 5 / Trace PhyAddr Sig5

CU_S110-DP, CU_S110-CAN, CU_S110-PN

Can be changed: U, T | **Calculated:** - | **Access level:** 3
Data type: Unsigned32 | **Dyn. index:** - | **Func. diagram:** -
P-Group: Trace and function generator | **Unit group:** - | **Unit selection:** -
Not for motor type: - | **Scaling:** - | **Expert list:** 0

Min	Max	Factory setting
0000 bin	1111 1111 1111 1111 1111 1111 1111 1111 bin	0000 bin

Description: Sets the physical address for the sixth signal to be traced.
The data type is defined using p4735.

Index: [0] = Trace 0
[1] = Trace 1

p4786[0...1] Trace physical address signal 6 / Trace PhyAddr Sig6

CU_S110-DP, CU_S110-CAN, CU_S110-PN

Can be changed: U, T | **Calculated:** - | **Access level:** 3
Data type: Unsigned32 | **Dyn. index:** - | **Func. diagram:** -
P-Group: Trace and function generator | **Unit group:** - | **Unit selection:** -
Not for motor type: - | **Scaling:** - | **Expert list:** 0

Min	Max	Factory setting
0000 bin	1111 1111 1111 1111 1111 1111 1111 1111 bin	0000 bin

Description: Sets the physical address for the seventh signal to be traced.
The data type is defined using p4736.

Index: [0] = Trace 0
[1] = Trace 1

p4787[0...1] Trace physical address signal 7 / Trace PhyAddr Sig7

CU_S110-DP, CU_S110-CAN, CU_S110-PN

Can be changed: U, T	**Calculated:** -	**Access level:** 3
Data type: Unsigned32	**Dyn. index:** -	**Func. diagram:** -
P-Group: Trace and function generator	**Unit group:** -	**Unit selection:** -
Not for motor type: -	**Scaling:** -	**Expert list:** 0
Min	**Max**	**Factory setting**
0000 bin	1111 1111 1111 1111 1111 1111 1111 1111 bin	0000 bin

Description: Sets the physical address for the eighth signal to be traced.
The data type is defined using p4737.

Index: [0] = Trace 0
[1] = Trace 1

p4789[0...1] Trace physical address trigger signal / Trace PhyAddr Trig

CU_S110-DP, CU_S110-CAN, CU_S110-PN

Can be changed: U, T	**Calculated:** -	**Access level:** 3
Data type: Unsigned32	**Dyn. index:** -	**Func. diagram:** -
P-Group: Trace and function generator	**Unit group:** -	**Unit selection:** -
Not for motor type: -	**Scaling:** -	**Expert list:** 0
Min	**Max**	**Factory setting**
0000 hex	FFFF FFFF hex	0000 hex

Description: Sets the physical address for the trigger signal.
The data type is defined by making the appropriate selection in p4711.

Index: [0] = Trace 0
[1] = Trace 1

r4790[0...1] Trace data type 5 traced / Trace rec type 5

CU_S110-DP, CU_S110-CAN, CU_S110-PN

Can be changed: -	**Calculated:** -	**Access level:** 3
Data type: Unsigned32	**Dyn. index:** -	**Func. diagram:** -
P-Group: Trace and function generator	**Unit group:** -	**Unit selection:** -
Not for motor type: -	**Scaling:** -	**Expert list:** 0
Min	**Max**	**Factory setting**
-	-	-

Index: [0] = Trace 0
[1] = Trace 1

r4791[0...1] Trace data type 6 traced / Trace rec type 6

CU_S110-DP, CU_S110-CAN, CU_S110-PN

Can be changed: -	**Calculated:** -	**Access level:** 3
Data type: Unsigned32	**Dyn. index:** -	**Func. diagram:** -
P-Group: Trace and function generator	**Unit group:** -	**Unit selection:** -
Not for motor type: -	**Scaling:** -	**Expert list:** 0
Min	**Max**	**Factory setting**
-	-	-

Index: [0] = Trace 0
[1] = Trace 1

r4792[0...1] Trace data type 7 traced / Trace rec type 7

CU_S110-DP, CU_S110-CAN, CU_S110-PN

Can be changed: -	**Calculated:** -	**Access level:** 3
Data type: Unsigned32	**Dyn. index:** -	**Func. diagram:** -
P-Group: Trace and function generator	**Unit group:** -	**Unit selection:** -
Not for motor type: -	**Scaling:** -	**Expert list:** 0
Min	**Max**	**Factory setting**
-	-	-

Index: [0] = Trace 0
[1] = Trace 1

r4793[0...1] Trace data type 8 traced / Trace rec type 8

CU_S110-DP, CU_S110-CAN, CU_S110-PN

Can be changed: -	**Calculated:** -	**Access level:** 3
Data type: Unsigned32	**Dyn. index:** -	**Func. diagram:** -
P-Group: Trace and function generator	**Unit group:** -	**Unit selection:** -
Not for motor type: -	**Scaling:** -	**Expert list:** 0
Min	**Max**	**Factory setting**
-	-	-

Index: [0] = Trace 0
[1] = Trace 1

p4795 Trace memory bank changeover / Trace mem changeov

CU_S110-DP, CU_S110-CAN, CU_S110-PN

Can be changed: U, T	**Calculated:** -	**Access level:** 3
Data type: Unsigned32	**Dyn. index:** -	**Func. diagram:** -
P-Group: Trace and function generator	**Unit group:** -	**Unit selection:** -
Not for motor type: -	**Scaling:** -	**Expert list:** 0
Min	**Max**	**Factory setting**
0	500	0

Description: Changes over the memory bank to read out the contents of the trace buffer.
Dependency: Refer to: r4740, r4741, r4742, r4743, r4750, r4751, r4752, r4753

r4799 Trace memory location free / Trace mem free

CU_S110-DP, CU_S110-CAN, CU_S110-PN

Can be changed: -	**Calculated:** -	**Access level:** 3
Data type: Unsigned32	**Dyn. index:** -	**Func. diagram:** -
P-Group: Trace and function generator	**Unit group:** -	**Unit selection:** -
Not for motor type: -	**Scaling:** -	**Expert list:** 0
Min	**Max**	**Factory setting**
-	-	-

Description: Displays the free memory for the trace in bytes.
Dependency: Refer to: r4708

p4800 Function generator control / FG control

CU_S110-DP, CU_S110-CAN, CU_S110-PN

Can be changed: U, T	**Calculated:** -	**Access level:** 3
Data type: Integer16	**Dyn. index:** -	**Func. diagram:** -
P-Group: Trace and function generator	**Unit group:** -	**Unit selection:** -
Not for motor type: -	**Scaling:** -	**Expert list:** 0
Min	**Max**	**Factory setting**
0	3	0

Description: The function generator is started with p4800 = 1.
The signal is only generated for a 1 signal of binector input p4819.

Value:
0: Stop function generator
1: Start function generator
2: Check function generator parameterization
3: Start function generator without enable signals

Dependency: Refer to: p4819

r4805 Function generator status / FG status

CU_S110-DP, CU_S110-CAN, CU_S110-PN

Can be changed: -	**Calculated:** -	**Access level:** 3
Data type: Integer16	**Dyn. index:** -	**Func. diagram:** -
P-Group: Trace and function generator	**Unit group:** -	**Unit selection:** -
Not for motor type: -	**Scaling:** -	**Expert list:** 0
Min	**Max**	**Factory setting**
0	6	-

Description: Displays the actual status of the function generator.

Value:
0: Inactive
1: Generate accelerating ramp to offset
2: Generate parameterized signal shape
3: Generate braking ramp
4: Function generator stopped due to missing enable signals
5: Function generator waits for BI: p4819
6: Function generator parameterization has been checked

Dependency: Refer to: p4800, p4819

r4806.0 BO: Function generator status signal / FG status signal

CU_S110-DP, CU_S110-CAN, CU_S110-PN

Can be changed: -	**Calculated:** -	**Access level:** 3
Data type: Unsigned32	**Dyn. index:** -	**Func. diagram:** -
P-Group: Trace and function generator	**Unit group:** -	**Unit selection:** -
Not for motor type: -	**Scaling:** -	**Expert list:** 0
Min	**Max**	**Factory setting**
-	-	-

Description: Displays the status of the function generator.
0 signal: Function generator inactive
1 signal: Function generator running

Bit field:

Bit	Signal name	1 signal	0 signal	FP
00	Bit 0	ON	OFF	-

p4810 Function generator mode / FG operating mode

CU_S110-DP, CU_S110-CAN, CU_S110-PN

Can be changed: U, T	**Calculated:** -	**Access level:** 3
Data type: Integer16	**Dyn. index:** -	**Func. diagram:** -
P-Group: Trace and function generator	**Unit group:** -	**Unit selection:** -
Not for motor type: -	**Scaling:** -	**Expert list:** 0
Min	**Max**	**Factory setting**
0	99	0

Description: Sets the operating mode of the function generator.

Value:
0: Connection at connector output r4818
1: Connection at current setpoint after filter and r4818
2: Connection as disturbing torque and r4818
3: Connection at speed setpoint after filter and r4818
4: Connection at current setpoint before filter and r4818
5: Connection at speed setpoint before filter and r4818
6: Connection for free measurement function r4818 and r4834
99: Connection at physical address and r4818

p4812 Function generator physical address / FG phys address

CU_S110-DP, CU_S110-CAN, CU_S110-PN

Can be changed: U, T	**Calculated:** -	**Access level:** 3
Data type: Unsigned32	**Dyn. index:** -	**Func. diagram:** -
P-Group: Trace and function generator	**Unit group:** -	**Unit selection:** -
Not for motor type: -	**Scaling:** -	**Expert list:** 0
Min	**Max**	**Factory setting**
0	4294967295	0

Description: Sets the physical address where the function generator is to be connected.

Dependency: Only effective when p4810 = 99.

p4813 Function generator physical address reference value / FG phys addr ref

CU_S110-DP, CU_S110-CAN, CU_S110-PN

Can be changed: U, T	**Calculated:** -	**Access level:** 3
Data type: FloatingPoint32	**Dyn. index:** -	**Func. diagram:** -
P-Group: Trace and function generator	**Unit group:** -	**Unit selection:** -
Not for motor type: -	**Scaling:** -	**Expert list:** 0
Min	**Max**	**Factory setting**
1.00	1000000.00	1.00

Description: Sets the reference value for 100 % for referred inputs.

Dependency: Only effective when p4810 = 99.

p4815[0...2] Function generator drive number / FG drive number

CU_S110-DP, CU_S110-CAN, CU_S110-PN

Can be changed: U, T	**Calculated:** -	**Access level:** 3
Data type: Unsigned16	**Dyn. index:** -	**Func. diagram:** -
P-Group: Trace and function generator	**Unit group:** -	**Unit selection:** -
Not for motor type: -	**Scaling:** -	**Expert list:** 0
Min	**Max**	**Factory setting**
0	65535	0

Description: Selects the required drive where the function generator is to be connected.

Index: [0] = First drive for connection
[1] = Second drive for connection
[2] = Third drive for connection

Dependency: Only effective when p4810 = 1, 2, 3, 4 or 5.

p4816 Function generator output signal integer number scaling / FG outp integ scal

CU_S110-DP, CU_S110-CAN, CU_S110-PN

Can be changed: U, T	**Calculated:** -	**Access level:** 4
Data type: Integer32	**Dyn. index:** -	**Func. diagram:** -
P-Group: -	**Unit group:** -	**Unit selection:** -
Not for motor type: -	**Scaling:** -	**Expert list:** 1
Min	**Max**	**Factory setting**
-2147483648	2147483647	0

Description: Sets the scaling for the integer number of the output signal for the function generator.

Dependency: Refer to: r4805, r4817

Note: The parameter can only be changed in the following operating states:
r4805 = 0, 4, 6

r4817 CO: Function generator output signal integer number / FG outp integ no.

CU_S110-DP, CU_S110-CAN, CU_S110-PN

Can be changed: -	**Calculated:** -	**Access level:** 4
Data type: Integer32	**Dyn. index:** -	**Func. diagram:** -
P-Group: Trace and function generator	**Unit group:** -	**Unit selection:** -
Not for motor type: -	**Scaling:** -	**Expert list:** 0
Min	**Max**	**Factory setting**
-	-	-

Description: Display and connector output for the integer number of the output signal for the function generator.
Dependency: Refer to: p4816
Note: The value is output independent of the function generator operating mode.

r4818 CO: Function generator output signal / FG outp_sig

CU_S110-DP, CU_S110-CAN, CU_S110-PN

Can be changed: -	**Calculated:** -	**Access level:** 3
Data type: FloatingPoint32	**Dyn. index:** -	**Func. diagram:** -
P-Group: Trace and function generator	**Unit group:** -	**Unit selection:** -
Not for motor type: -	**Scaling:** PERCENT	**Expert list:** 0
Min	**Max**	**Factory setting**
- [%]	- [%]	- [%]

Description: Displays the output signal for the function generator.
Dependency: Refer to: p4810
Note: The value is displayed independently of the function generator mode.

p4819 BI: Function generator control / FG control

CU_S110-DP, CU_S110-CAN, CU_S110-PN

Can be changed: U, T	**Calculated:** -	**Access level:** 3
Data type: Unsigned32 / Binary	**Dyn. index:** -	**Func. diagram:** -
P-Group: Trace and function generator	**Unit group:** -	**Unit selection:** -
Not for motor type: -	**Scaling:** -	**Expert list:** 0
Min	**Max**	**Factory setting**
-	-	1

Description: Sets the signal source to control the function generator.
When the function generator is running, signal generation is stopped with a 0 signal from BI: p4819 and p4800 is set to 0.
Dependency: Refer to: p4800

p4820 Function generator signal shape / FG signal shape

CU_S110-DP, CU_S110-CAN, CU_S110-PN

Can be changed: U, T	**Calculated:** -	**Access level:** 3
Data type: Integer16	**Dyn. index:** -	**Func. diagram:** -
P-Group: Trace and function generator	**Unit group:** -	**Unit selection:** -
Not for motor type: -	**Scaling:** -	**Expert list:** 0
Min	**Max**	**Factory setting**
1	5	1

Description: Sets the signal to be generated for the function generator.
Value:
1: Square-wave
2: Staircase
3: Delta
4: Binary noise - PRBS (Pseudo Random Binary Signal)
5: Sine-wave

p4821 Function generator period / FG period duration

CU_S110-DP, CU_S110-CAN, CU_S110-PN

Can be changed: U, T	**Calculated:** -	**Access level:** 3
Data type: FloatingPoint32	**Dyn. index:** -	**Func. diagram:** -
P-Group: Trace and function generator	**Unit group:** -	**Unit selection:** -
Not for motor type: -	**Scaling:** -	**Expert list:** 0
Min	**Max**	**Factory setting**
0.00 [ms]	60000.00 [ms]	1000.00 [ms]

Description: Sets the period of the signal to be generated for the function generator.

Dependency: Ineffective when p4820 = 4 (PRBS).

p4822 Function generator pulse width / FG pulse width

CU_S110-DP, CU_S110-CAN, CU_S110-PN

Can be changed: U, T	**Calculated:** -	**Access level:** 3
Data type: FloatingPoint32	**Dyn. index:** -	**Func. diagram:** -
P-Group: Trace and function generator	**Unit group:** -	**Unit selection:** -
Not for motor type: -	**Scaling:** -	**Expert list:** 0
Min	**Max**	**Factory setting**
0.00 [ms]	60000.00 [ms]	500.00 [ms]

Description: Sets the pulse width for the signal to be generated for the function generator.

Dependency: Only effective when p4820 = 1 (square-wave).

p4823 Function generator bandwidth / FG bandwidth

CU_S110-DP, CU_S110-CAN, CU_S110-PN

Can be changed: U, T	**Calculated:** -	**Access level:** 3
Data type: FloatingPoint32	**Dyn. index:** -	**Func. diagram:** -
P-Group: Trace and function generator	**Unit group:** -	**Unit selection:** -
Not for motor type: -	**Scaling:** -	**Expert list:** 0
Min	**Max**	**Factory setting**
0.0025 [Hz]	16000.0000 [Hz]	4000.0000 [Hz]

Description: Sets the bandwidth for the signal to be generated for the function generator.

Dependency: Only effective when p4820 = 4 (PRBS).
Refer to: p4830
Refer to: A02041

p4824 Function generator amplitude / FG amplitude

CU_S110-DP, CU_S110-CAN, CU_S110-PN

Can be changed: U, T	**Calculated:** -	**Access level:** 3
Data type: FloatingPoint32	**Dyn. index:** -	**Func. diagram:** -
P-Group: Trace and function generator	**Unit group:** -	**Unit selection:** -
Not for motor type: -	**Scaling:** -	**Expert list:** 0
Min	**Max**	**Factory setting**
-1600.00 [%]	1600.00 [%]	5.00 [%]

Description: Sets the amplitude for the signal to be generated for the function generator.

Dependency: Units are dependent on p4810.
If p4810 = 1, 2, 4: The amplitude is referred to p2002 (reference current).
If p4810 = 3, 5: The amplitude is referred to p2000 (reference speed).

p4825 Function generator 2nd amplitude / FG 2nd amplitude

CU_S110-DP, CU_S110-CAN, CU_S110-PN

Can be changed: U, T	**Calculated:** -	**Access level:** 3
Data type: FloatingPoint32	**Dyn. index:** -	**Func. diagram:** -
P-Group: Trace and function generator	**Unit group:** -	**Unit selection:** -
Not for motor type: -	**Scaling:** -	**Expert list:** 0
Min	**Max**	**Factory setting**
-1600.00 [%]	1600.00 [%]	7.00 [%]

Description: Sets the second amplitude for the signal to be generated for the function generator.

Dependency: Only effective for p4820 = 2 (staircase).
Units are dependent on p4810.
If p4810 = 1, 2, 4: The amplitude is referred to p2002 (reference current).
If p4810 = 3, 5: The amplitude is referred to p2000 (reference speed).

p4826 Function generator offset / FG offset

CU_S110-DP, CU_S110-CAN, CU_S110-PN

Can be changed: U, T	**Calculated:** -	**Access level:** 3
Data type: FloatingPoint32	**Dyn. index:** -	**Func. diagram:** -
P-Group: Trace and function generator	**Unit group:** -	**Unit selection:** -
Not for motor type: -	**Scaling:** -	**Expert list:** 0
Min	**Max**	**Factory setting**
-1600.00 [%]	1600.00 [%]	0.00 [%]

Description: Sets the offset (DC component) of the signal to be generated for the function generator.

Dependency: Units are dependent on p4810.
If p4810 = 1, 2, 4: The offset is referred to p2002 (reference current).
If p4810 = 3, 5: The offset is referred to p2000 (reference speed).
If p4810 = 2: In order to avoid the undesirable effects of play (backlash), the offset does not act on the current setpoint, but instead on the speed setpoint.

p4827 Function generator ramp-up time to offset / FG ramp-up offset

CU_S110-DP, CU_S110-CAN, CU_S110-PN

Can be changed: U, T	**Calculated:** -	**Access level:** 3
Data type: FloatingPoint32	**Dyn. index:** -	**Func. diagram:** -
P-Group: Trace and function generator	**Unit group:** -	**Unit selection:** -
Not for motor type: -	**Scaling:** -	**Expert list:** 0
Min	**Max**	**Factory setting**
0.00 [ms]	100000.00 [ms]	32.00 [ms]

Description: Sets the ramp-up time to the offset for the function generator.

p4828 Function generator lower limit / FG lower limit

CU_S110-DP, CU_S110-CAN, CU_S110-PN

Can be changed: U, T	**Calculated:** -	**Access level:** 3
Data type: FloatingPoint32	**Dyn. index:** -	**Func. diagram:** -
P-Group: Trace and function generator	**Unit group:** -	**Unit selection:** -
Not for motor type: -	**Scaling:** -	**Expert list:** 0
Min	**Max**	**Factory setting**
-10000.00 [%]	0.00 [%]	-100.00 [%]

Description: Sets the lower limit for the function generator.

Dependency: For p4810 = 2 the limit only applies to the current setpoint, but not the speed setpoint (offset).

p4829 Function generator upper limit / FG upper limit

CU_S110-DP, CU_S110-CAN, CU_S110-PN

Can be changed: U, T	**Calculated:** -	**Access level:** 3
Data type: FloatingPoint32	**Dyn. index:** -	**Func. diagram:** -
P-Group: Trace and function generator	**Unit group:** -	**Unit selection:** -
Not for motor type: -	**Scaling:** -	**Expert list:** 0
Min	**Max**	**Factory setting**
0.00 [%]	10000.00 [%]	100.00 [%]

Description: Sets the upper limit for the function generator.

Dependency: For p4810 = 2 the limit only applies to the current setpoint, but not the speed setpoint (offset).

p4830 Function generator time slice cycle / FG time slice

CU_S110-DP, CU_S110-CAN, CU_S110-PN

Can be changed: U, T	**Calculated:** -	**Access level:** 3
Data type: FloatingPoint32	**Dyn. index:** -	**Func. diagram:** -
P-Group: Trace and function generator	**Unit group:** -	**Unit selection:** -
Not for motor type: -	**Scaling:** -	**Expert list:** 0
Min	**Max**	**Factory setting**
0.03125 [ms]	2.00000 [ms]	0.12500 [ms]

Description: Sets the time slice cycle in which the function generator is called.

p4831 Function generator amplitude scaling / FG amplitude scal

CU_S110-DP, CU_S110-CAN, CU_S110-PN

Can be changed: U, T	**Calculated:** -	**Access level:** 3
Data type: FloatingPoint32	**Dyn. index:** -	**Func. diagram:** -
P-Group: Trace and function generator	**Unit group:** -	**Unit selection:** -
Not for motor type: -	**Scaling:** -	**Expert list:** 0
Min	**Max**	**Factory setting**
0.00000 [%]	200.00000 [%]	100.00000 [%]

Description: Sets the scaling for the amplitude of the signal waveforms for all output channels.
The value can be changed while the function generator is running.

p4832[0...2] Function generator amplitude scaling / FG amplitude scal

CU_S110-DP, CU_S110-CAN, CU_S110-PN

Can be changed: U, T	**Calculated:** -	**Access level:** 3
Data type: FloatingPoint32	**Dyn. index:** -	**Func. diagram:** -
P-Group: Trace and function generator	**Unit group:** -	**Unit selection:** -
Not for motor type: -	**Scaling:** -	**Expert list:** 0
Min	**Max**	**Factory setting**
-340.28235E36 [%]	340.28235E36 [%]	100.00000 [%]

Description: Sets the scaling for the amplitude of the signal waveforms separately for each output channel.
The value cannot be changed while the function generator is running.

Index: [0] = First drive for connection
[1] = Second drive for connection
[2] = Third drive for connection

p4833[0...2] Function generator offset scaling / FG offset scal

CU_S110-DP, CU_S110-CAN, CU_S110-PN

Can be changed: U, T	**Calculated:** -	**Access level:** 3
Data type: FloatingPoint32	**Dyn. index:** -	**Func. diagram:** -
P-Group: Trace and function generator	**Unit group:** -	**Unit selection:** -
Not for motor type: -	**Scaling:** -	**Expert list:** 0
Min	**Max**	**Factory setting**
-340.28235E36 [%]	340.28235E36 [%]	100.00000 [%]

Description: Sets the scaling for the offset of the signal waveforms separately for each output channel.
The value cannot be changed while the function generator is running.

Index: [0] = First drive for connection
[1] = Second drive for connection
[2] = Third drive for connection

r4834[0...4] CO: Function generator free measurement output signal / FG fr MeasFct outp

CU_S110-DP, CU_S110-CAN, CU_S110-PN

Can be changed: -	**Calculated:** -	**Access level:** 3
Data type: FloatingPoint32	**Dyn. index:** -	**Func. diagram:** -
P-Group: Trace and function generator	**Unit group:** -	**Unit selection:** -
Not for motor type: -	**Scaling:** PERCENT	**Expert list:** 0
Min	**Max**	**Factory setting**
- [%]	- [%]	- [%]

Description: Displays the output signal for the free measurement function.

Index: [0] = Signal 1
[1] = Signal 2
[2] = Signal 3
[3] = Signal 4
[4] = Signal 5

Dependency: Refer to: p4810

Note: The signals are only output in the "free measurement function" operating mode (p4810 = 6)

p4835[0...4] Function generator free measurement function scaling / FG fr MeasFct scal

CU_S110-DP, CU_S110-CAN, CU_S110-PN

Can be changed: U, T	**Calculated:** -	**Access level:** 3
Data type: FloatingPoint32	**Dyn. index:** -	**Func. diagram:** -
P-Group: -	**Unit group:** -	**Unit selection:** -
Not for motor type: -	**Scaling:** -	**Expert list:** 1
Min	**Max**	**Factory setting**
-200.00000 [%]	200.00000 [%]	100.00000 [%]

Description: Sets the scaling of the output signals for the free measurement function.

Index: [0] = Signal 1
[1] = Signal 2
[2] = Signal 3
[3] = Signal 4
[4] = Signal 5

Note: The parameter cannot be changed when the measurement function has been started (r4706 = 2, 3).

r5005 Spindle file system status / File sys stat

SERVO_S110-DP, SERVO_S110-CAN, SERVO_S110-PN

Can be changed: -	**Calculated:** -	**Access level:** 3
Data type: Unsigned32	**Dyn. index:** -	**Func. diagram:** -
P-Group: -	**Unit group:** -	**Unit selection:** -
Not for motor type: -	**Scaling:** -	**Expert list:** 1
Min	**Max**	**Factory setting**
-	-	-

Description: Displays the status for the file system on the non-volatile memory.
The individual result data and characteristic data are summarized in a corresponding file.

Bit field:

Bit	Signal name	1 signal	0 signal	FP
01	Result data clamping cycle thresholds available	Yes	No	-
02	Result data clamping cycle counter available	Yes	No	-
03	Result data operating hours counter available	Yes	No	-
04	Result data temperature diagnostics available	Yes	No	-
05	Result data real time clock synchronization available	Yes	No	-
06	Result data speed/torque matrix available	Yes	No	-
16	Characteristic data spindle available	Yes	No	-

17	Characteristic data clamping cycle counter available	Yes	No	-
19	Characteristic data operating hours counter available	Yes	No	-
20	Characteristic data temperature diagnostics available	Yes	No	-
22	Characteristic data speed/torque matrix available	Yes	No	-
30	Characteristic data sensor description available	Yes	No	-
31	Characteristic data sensor calibration data available	Yes	No	-

p5007 Spindle file system selection / File sys select

SERVO_S110-DP, SERVO_S110-CAN, SERVO_S110-PN

Can be changed: T	**Calculated:** -	**Access level:** 3
Data type: Unsigned32	**Dyn. index:** -	**Func. diagram:** -
P-Group: -	**Unit group:** -	**Unit selection:** -
Not for motor type: -	**Scaling:** -	**Expert list:** 1
Min	**Max**	**Factory setting**
-	-	0000 0000 0000 0000 0000 0000 0000 0000 bin

Description: Sets the files to adapt the file system.

Bit field:

Bit	Signal name	1 signal	0 signal	FP
01	Result data clamping cycle thresholds selected	Yes	No	-
02	Result data clamping cycle counter selected	Yes	No	-
03	Result data operating hours counter selected	Yes	No	-
04	Result data temperature diagnostics selected	Yes	No	-
05	Result data real time clock synchronization selected	Yes	No	-
06	Result data speed/torque matrix selected	Yes	No	-
17	Characteristic data clamping cycle counter selected	Yes	No	-
19	Characteristic data operating hours counter selected	Yes	No	-
20	Characteristic data temperature diagnostics selected	Yes	No	-
22	Characteristic data speed/torque matrix selected	Yes	No	-

p5009 Adapt spindle file system / Adapt file sys

SERVO_S110-DP, SERVO_S110-CAN, SERVO_S110-PN

Can be changed: T	**Calculated:** -	**Access level:** 3
Data type: Integer16	**Dyn. index:** -	**Func. diagram:** -
P-Group: -	**Unit group:** -	**Unit selection:** -
Not for motor type: -	**Scaling:** -	**Expert list:** 1
Min	**Max**	**Factory setting**
0	53	0

Description: Setting to adapt the file system on the non-volatile memory.
Example:
The result data "clamping cycle thresholds" are available (r5005.1 = 1) and should be reset.
--> set p5007.1 = 1: select result data "clamping cycle thresholds".
--> set p5009 = 1: initiate "reset" function for the file selected in p5007.
--> p5009 = 40: feedback signal during "operation running".
--> p5009 = 20: feedback signal for a successfully completed operation.
--> p5009 = 51 ... 53: fault values if the operation was not able to be successfully completed.
--> carry out a POWER ON (power off/on).

Value:
0: No function
1: Reset
2: Set invalid
3: Reserved
5: Set valid
20: Operation successfully completed.
40: Operation running
51: Function not supported
52: File access unsuccessful
53: Operation unsuccessful

Note: Help for fault value = 51 ... 53:
- repeat the operation.

p5016 Enable spindle commissioning / Enable comm

SERVO_S110-DP, SERVO_S110-CAN, SERVO_S110-PN

Can be changed: C2, T	**Calculated:** -	**Access level:** 3
Data type: Integer16	**Dyn. index:** -	**Func. diagram:** -
P-Group: -	**Unit group:** -	**Unit selection:** -
Not for motor type: -	**Scaling:** -	**Expert list:** 1
Min	**Max**	**Factory setting**
0	1	0

Description: Setting to enable/inhibit spindle commissioning.

Value:
0: Spindle commissioning enabled
1: Spindle commissioning inhibited

Note: The parameter is automatically set to a value of 1 after exiting commissioning (p0009 = 0).

r7760 Write protection status / Write prot stat

CU_S110-DP, CU_S110-CAN, CU_S110-PN, SERVO_S110-DP, SERVO_S110-CAN, SERVO_S110-PN

Can be changed: -	**Calculated:** -	**Access level:** 3
Data type: Unsigned16	**Dyn. index:** -	**Func. diagram:** -
P-Group: -	**Unit group:** -	**Unit selection:** -
Not for motor type: -	**Scaling:** -	**Expert list:** 1
Min	**Max**	**Factory setting**
-	-	-

Description: Displays the status for write protection of adjustable parameters.

Bit field:

Bit	Signal name	1 signal	0 signal	FP
00	Write protection active	Yes	No	-

Note: Write protection can be activated/deactivated via p7760 on the Control Unit.

p7761 Write protection / Write protection

CU_S110-DP, CU_S110-CAN, CU_S110-PN

Can be changed: U, T	**Calculated:** -	**Access level:** 3
Data type: Integer16	**Dyn. index:** -	**Func. diagram:** -
P-Group: -	**Unit group:** -	**Unit selection:** -
Not for motor type: -	**Scaling:** -	**Expert list:** 1
Min	**Max**	**Factory setting**
0	1	0

Description: Setting for activating/de-activating the write protection for adjustable parameters.

Value:
0: Inactive
1: Active

Note: The following parameters are excluded from the write protection:
- p0003 (BOP access level)
- p0971 (drive object save parameters)
- p0977 (save all parameters)
- p3950 (service parameters)
- p3981 (acknowledge fault, drive object)
- p7760 (adjustable parameters write protection)

p7820 DRIVE-CLiQ component component number / DLQ comp_no

CU_S110-DP, CU_S110-CAN, CU_S110-PN

Can be changed: U, T	**Calculated:** -	**Access level:** 4
Data type: Unsigned16	**Dyn. index:** -	**Func. diagram:** -
P-Group: -	**Unit group:** -	**Unit selection:** -
Not for motor type: -	**Scaling:** -	**Expert list:** 1
Min	**Max**	**Factory setting**
0	65535	0

Description: Sets the component number of the DRIVE-CLiQ component whose parameters are to be accessed.

Dependency: Refer to: p7821, p7822, r7823

p7821 DRIVE-CLiQ component parameter number / DLQ para_no

CU_S110-DP, CU_S110-CAN, CU_S110-PN

Can be changed: U, T	**Calculated:** -	**Access level:** 4
Data type: Unsigned16	**Dyn. index:** -	**Func. diagram:** -
P-Group: -	**Unit group:** -	**Unit selection:** -
Not for motor type: -	**Scaling:** -	**Expert list:** 1
Min	**Max**	**Factory setting**
0	65535	0

Description: Sets the parameter number to access a parameter of a DRIVE-CLiQ component.

Dependency: Refer to: p7820, p7822, r7823

p7822 DRIVE-CLiQ component parameter index / DLQ para_index

CU_S110-DP, CU_S110-CAN, CU_S110-PN

Can be changed: U, T	**Calculated:** -	**Access level:** 4
Data type: Unsigned16	**Dyn. index:** -	**Func. diagram:** -
P-Group: -	**Unit group:** -	**Unit selection:** -
Not for motor type: -	**Scaling:** -	**Expert list:** 1
Min	**Max**	**Factory setting**
0	65535	0

Description: Sets the parameter index to access a parameter of a DRIVE-CLiQ component.

Dependency: Refer to: p7820, p7821, r7823

r7823 DRIVE-CLiQ component read parameter value / Read DLQ value

CU_S110-DP, CU_S110-CAN, CU_S110-PN

Can be changed: -	**Calculated:** -	**Access level:** 4
Data type: Unsigned32	**Dyn. index:** -	**Func. diagram:** -
P-Group: -	**Unit group:** -	**Unit selection:** -
Not for motor type: -	**Scaling:** -	**Expert list:** 1
Min	**Max**	**Factory setting**
-	-	-

Description: Displays the parameter value read from the DRIVE-CLiQ component.

Dependency: Refer to: p7820, p7821, p7822

r7825[0...6] DRIVE-CLiQ component versions / DLQ version

CU_S110-DP, CU_S110-CAN, CU_S110-PN

Can be changed: -	**Calculated:** -	**Access level:** 3
Data type: Unsigned32	**Dyn. index:** -	**Func. diagram:** -
P-Group: -	**Unit group:** -	**Unit selection:** -
Not for motor type: -	**Scaling:** -	**Expert list:** 1
Min	**Max**	**Factory setting**
-	-	-

Description: Displays the firmware and EPROM versions of the DRIVE-CLiQ component selected using p7828[1].

Index: [0] = Reference firmware version
[1] = Actual firmware version
[2] = EPROM0 version
[3] = EPROM1 version

[4] = EPROM2 version
[5] = EPROM3 version
[6] = EPROM4 version

Note: Reference firmware version: Version on the memory card/device memory.
Current firmware version: Actual version of the DRIVE-CLiQ component.
EPROM version: Current EPROM version of the DRIVE-CLiQ component.

r7827 Firmware update progress display / FW update progress

CU_S110-DP, CU_S110-CAN, CU_S110-PN

Can be changed: -	**Calculated:** -	**Access level:** 3
Data type: FloatingPoint32	**Dyn. index:** -	**Func. diagram:** -
P-Group: -	**Unit group:** -	**Unit selection:** -
Not for motor type: -	**Scaling:** -	**Expert list:** 1
Min	**Max**	**Factory setting**
- [%]	- [%]	- [%]

Description: Displays the progress when updating the firmware of the DRIVE-CLiQ components.

p7830 Diagnostics telegram selection / Diag telegram

SERVO_S110-DP, SERVO_S110-CAN, SERVO_S110-PN

Can be changed: T	**Calculated:** -	**Access level:** 4
Data type: Integer16	**Dyn. index:** -	**Func. diagram:** -
P-Group: -	**Unit group:** -	**Unit selection:** -
Not for motor type: -	**Scaling:** -	**Expert list:** 1
Min	**Max**	**Factory setting**
0	3	0

Description: Selects a telegram whose contents should be shown in p7831 ... p7836.

Value:
0: Reserved
1: First cyclic receive telegram sensor 1
2: First cyclic receive telegram sensor 2
3: First cyclic receive telegram sensor 3

Dependency: Refer to: r7831, r7832, r7833, r7834, r7835, r7836

r7831[0...15] Telegram diagnostics signals / Tel diag signals

SERVO_S110-DP, SERVO_S110-CAN, SERVO_S110-PN

Can be changed: -	**Calculated:** -	**Access level:** 4
Data type: Integer16	**Dyn. index:** -	**Func. diagram:** -
P-Group: -	**Unit group:** -	**Unit selection:** -
Not for motor type: -	**Scaling:** -	**Expert list:** 1
Min	**Max**	**Factory setting**
0	15157	-

Description: Displays the signals contained in the selected telegram (p7830).

Value:
0: UNUSED
1: UNKNOWN
102: SAPAR_ID_DSA_ALARM
110: SAPAR_ALARMBITS_FLOAT_0
111: SAPAR_ALARMBITS_FLOAT_1
112: SAPAR_ALARMBITS_FLOAT_2
113: SAPAR_ALARMBITS_FLOAT_3
114: SAPAR_ALARMBITS_FLOAT_4
115: SAPAR_ALARMBITS_FLOAT_5
10500: ENC_ID_TIME_PRETRIGGER
10501: ENC_ID_TIME_SEND_TELEG_1
10502: ENC_ID_TIME_CYCLE_FINISHED
10503: ENC_ID_TIME_DELTA_FUNMAN
10504: ENC_ID_SUBTRACE_CALCTIMES
10505: ENC_ID_SYNO_PERIOD
10516: ENC_ID_ADC_TRACK_A
10517: ENC_ID_ADC_TRACK_B
10518: ENC_ID_ADC_TRACK_C
10519: ENC_ID_ADC_TRACK_D

10520: ENC_ID_ADC_TRACK_A_SAFETY
10521: ENC_ID_ADC_TRACK_B_SAFETY
10523: ENC_ID_ADC_TEMP_1
10526: ENC_ID_ADC_TRACK_R
10532: ENC_ID_TRACK_AB_X
10533: ENC_ID_TRACK_AB_Y
10534: ENC_ID_OFFSET_CORR_AB_X
10535: ENC_ID_OFFSET_CORR_AB_Y
10536: ENC_ID_AB_ABS_VALUE
10537: ENC_ID_TRACK_CD_X
10538: ENC_ID_TRACK_CD_Y
10539: ENC_ID_TRACK_CD_ABS
10542: ENC_ID_AB_RAND_X
10543: ENC_ID_AB_RAND_Y
10544: ENC_ID_AB_RAND_ABS_VALUE
10545: ENC_ID_SUBTRACE_ABS_ARRAY
10546: ENC_ID_PROC_OFFSET_0
10547: ENC_ID_PROC_OFFSET_4
10564: ENC_SELFTEMP_ACT
10565: ENC_ID_MOTOR_TEMP_TOP
10566: ENC_ID_MOTOR_TEMP_1
10580: ENC_ID_RESISTANCE_1
10590: ENC_ID_ANA_CHAN_A
10591: ENC_ID_ANA_CHAN_B
10592: ENC_ID_ANA_CHAN_X
10593: ENC_ID_ANA_CHAN_Y
10596: ENC_ID_AB_ANGLE
10597: ENC_ID_CD_ANGLE
10598: ENC_ID_MECH_ANGLE_HI
10599: ENC_ID_RM_POS_PHI_COMMU
10600: ENC_ID_PHI_COMMU
10612: ENC_ID_DIFF_CD_INC
10613: ENC_ID_RM_POS_PHI_COMMU_RFG
10628: ENC_ID_MECH_ANGLE
10629: ENC_ID_MECH_RM_POS
10644: ENC_ID_INIT_VECTOR
10645: FEAT_INIT_VECTOR
10660: ENC_ID_SENSOR_STATE
10661: ENC_ID_BASIC_SYSTEM
10662: ENC_ID_REFMARK_STATUS
10663: ENC_ID_DSA_STATUS1_SENSOR
10664: ENC_ID_DSA_RMSTAT_HANDSHAKE
10665: ENC_ID_DSA_CONTROL1_SENSOR
10667: ENC_ID_SAFETY
10676: ENC_ID_COUNTCORR_SAW_VALUE
10677: ENC_ID_COUNTCORR_ABS_VALUE
10678: ENC_ID_SAWTOOTH_CORR
10692: ENC_ID_RESISTANCE_CALIB_INSTANT
10693: ENC_ID_SERPROT_POS
10724: ENC_ID_ACT_FUNMAN_FUNCTION
10725: ENC_ID_SAFETY_COUNTER_CRC
10740: ENC_ID_POS_ABSOLUTE
10741: ENC_ID_POS_REFMARK
10742: ENC_ID_SAWTOOTH
10743: ENC_ID_SAFETY_PULSE_COUNTER
10756: ENC_ID_DSA_ACTUAL_SPEED
10757: ENC_ID_SPEED_DEV_ABS
10772: ENC_ID_DSA_POS_XIST1
10788: ENC_ID_AB_CROSS_CORR
10789: ENC_ID_AB_GAIN_Y_CORR
10790: ENC_ID_AB_PEAK_CORR
11825: ENC_ID_RES_TRANSITION_RATIO
11826: ENC_ID_RES_PHASE_SHIFT
15150: ENC_ID_SPINDLE_S1_RAW
15151: ENC_ID_SPINDLE_S4_RAW
15152: ENC_ID_SPINDLE_S5_RAW

15155: ENC_ID_SPINDLE_S1_CAL
15156: ENC_ID_SPINDLE_S4_CAL
15157: ENC_ID_SPINDLE_S5_CAL

r7832[0...15] Telegram diagnostics numerical format / tel diag format

SERVO_S110-DP, SERVO_S110-CAN, SERVO_S110-PN

Can be changed: -	**Calculated:** -	**Access level:** 4
Data type: Integer16	**Dyn. index:** -	**Func. diagram:** -
P-Group: -	**Unit group:** -	**Unit selection:** -
Not for motor type: -	**Scaling:** -	**Expert list:** 1
Min	**Max**	**Factory setting**
-1	14	-

Description: Displays the original numerical format of the signals contained in the telegram.
The associated signal number is represented in the appropriate index of r7831.

Value:
-1: Unknown
0: Boolean
1: Signed 1 byte
2: Signed 2 byte
3: Signed 4 byte
4: Signed 8 byte
5: Unsigned 1 byte
6: Unsigned 2 byte
7: Unsigned 4 byte
8: Unsigned 8 byte
9: Float 4 byte
10: Double 8 byte
11: mm dd yy HH MM SS MS DOW
12: ASCII string
13: SINUMERIK frame type
14: SINUMERIK axis type

Dependency: Refer to: r7831

r7833[0...15] Telegram diagnostics unsigned / Tel diag unsigned

SERVO_S110-DP, SERVO_S110-CAN, SERVO_S110-PN

Can be changed: -	**Calculated:** -	**Access level:** 4
Data type: Unsigned32	**Dyn. index:** -	**Func. diagram:** -
P-Group: -	**Unit group:** -	**Unit selection:** -
Not for motor type: -	**Scaling:** -	**Expert list:** 1
Min	**Max**	**Factory setting**
-	-	-

Description: Parameter to display a DSA signal in the unsigned-integer format.
The associated signal number is represented at the appropriate index in r7831.

r7834[0...15] Telegram diagnostics signed / Tel diag signed

SERVO_S110-DP, SERVO_S110-CAN, SERVO_S110-PN

Can be changed: -	**Calculated:** -	**Access level:** 4
Data type: Integer32	**Dyn. index:** -	**Func. diagram:** -
P-Group: -	**Unit group:** -	**Unit selection:** -
Not for motor type: -	**Scaling:** -	**Expert list:** 1
Min	**Max**	**Factory setting**
-	-	-

Description: Parameter to display a DSA signal in the signed-integer format.
The associated signal number is represented at the appropriate index in r7831.

r7835[0...15] Telegram diagnostics real / Tel diag real

SERVO_S110-DP, SERVO_S110-CAN, SERVO_S110-PN

Can be changed: -	**Calculated:** -	**Access level:** 4
Data type: FloatingPoint32	**Dyn. index:** -	**Func. diagram:** -
P-Group: -	**Unit group:** -	**Unit selection:** -
Not for motor type: -	**Scaling:** -	**Expert list:** 1
Min	**Max**	**Factory setting**
-	-	-

Description: Parameter to display a DSA signal in the float format.
The associated signal number is represented at the appropriate index in r7831.

r7836[0...15] Telegram diagnostics unit / Tel diag unit

SERVO_S110-DP, SERVO_S110-CAN, SERVO_S110-PN

Can be changed: -	**Calculated:** -	**Access level:** 4
Data type: Integer16	**Dyn. index:** -	**Func. diagram:** -
P-Group: -	**Unit group:** -	**Unit selection:** -
Not for motor type: -	**Scaling:** -	**Expert list:** 1
Min	**Max**	**Factory setting**
-1	147	-

Description: Displays the units of a DSA signal.
The associated signal number is represented at the appropriate index in r7831.

Value:

-1: Unknown
0: None
1: Millimeter or degrees
2: Millimeter
3: Degrees
4: mm/min or RPM
5: Millimeter / min
6: Revolutions / min
7: m/sec^2 or U/sec^2
8: m/sec^2
9: U/sec^2
10: m/sec^3 or U/sec^3
11: m/sec^3
12: U/sec^3
13: sec
14: 16.667 / sec
15: mm/revolution
16: ACX_UNIT_COMPENSATION_CORR
18: Newton
19: Kilogram
20: Kilogram meter^2
21: Percent
22: Hertz
23: Volt peak-to-peak
24: Amps peak-to-peak
25: Degrees Celsius
26: Degrees
28: Millimeter or degrees
29: Meters / minute
30: Meters / second
31: ohm
32: Millihenry
33: Newton meter
34: Newton meter/Ampere
35: Volt/Ampere
36: Newton meter second / rad
38: 31.25 microseconds
39: Microseconds
40: Milliseconds
42: Kilowatt
43: Micro amps peak-to-peak

44: Volt seconds
45: Microvolt seconds
46: Micro newton meters
47: Amps / volt seconds
48: Per mille
49: Hertz / second
53: Micrometer or millidegrees
54: Micrometer
55: Millidegrees
59: Nanometer
61: Newton/Amps
62: Volt seconds/meter
63: Newton seconds/meter
64: Micronewton
65: Liters / minute
66: Bar
67: Cubic centimeters
68: Millimeter / volt minute
69: Newton/Volt
80: Millivolts peak-to-peak
81: Volt rms
82: Millivolts rms
83: Amps rms
84: Micro amps rms
85: Micrometers / revolution
90: Tenths of a second
91: Hundredths of a second
92: 10 microseconds
93: Pulses
94: 256 pulses
95: Tenths of a pulse
96: Revolutions
97: 100 revolutions / minute
98: 10 revolutions / minute
99: 0.1 revolutions / minute
100: Thousandth revolution / minute
101: Pulses / second
102: 100 pulses / second
103: 10 revolutions / (minute x seconds)
104: 10000 pulses/second^2
105: 0.1 Hertz
106: 0.01 Hertz
107: 0.1 / seconds
108: Factor 0.1
109: Factor 0.01
110: Factor 0.001
111: Factor 0.0001
112: 0.1 Volt peak-to-peak
113: 0.1 Volt peak-to-peak
114: 0.1 amps peak-to-peak
115: Watt
116: 100 Watt
117: 10 Watt
118: 0.01 percent
119: 1/second^3
120: 0.01 percent/millisecond
121: Pulses / revolution
122: Microfarads
123: Milliohm
124: 0.01 Newton meter
125: Kilogram millimeter^2
126: Rad / (seconds newton meter)
127: Henry
128: Kelvin
129: Hours
130: Kilohertz

131: Milliamperes peak-to-peak
132: Millifarads
133: Meter
135: Kilowatt hours
136: Percent
137: Amps / Volt
138: Volt
139: Millivolts
140: Microvolts
141: Amps
142: Milliamperes
143: Micro amps
144: Milliamperes rms
145: Millimeter
146: Nanometer
147: Joules

r7843[0...20] Memory card serial number / Mem_card ser.no

CU_S110-DP, CU_S110-CAN, CU_S110-PN

Can be changed: -	**Calculated:** -	**Access level:** 1
Data type: Unsigned8	**Dyn. index:** -	**Func. diagram:** -
P-Group: -	**Unit group:** -	**Unit selection:** -
Not for motor type: -	**Scaling:** -	**Expert list:** 1
Min	**Max**	**Factory setting**
-	-	-

Description: Displays the actual serial number of the memory card.
The individual characters of the serial number are displayed in the ASCII code in the indices.

Dependency: Refer to: p9920, p9921

Notice: An ASCII table (excerpt) can be found, for example, in the appendix to the List Manual.

Note: Example: displaying the serial number for a memory card:
r7843[0] = 49 dec --> ASCII characters = "1" --> serial number, character 1
r7843[1] = 49 dec --> ASCII characters = "1" --> serial number, character 2
r7843[2] = 49 dec --> ASCII characters = "1" --> serial number, character 3
r7843[3] = 57 dec --> ASCII characters = "9" --> serial number, character 4
r7843[4] = 50 dec --> ASCII characters = "2" --> serial number, character 5
r7843[5] = 51 dec --> ASCII characters = "3" --> serial number, character 6
r7843[6] = 69 dec --> ASCII characters = "E" --> serial number, character 7
r7843[7] = 0 dec --> ASCII characters = " " --> serial number, character 8
...
r7843[19] = 0 dec --> ASCII characters = " " --> serial number, character 20
r7843[20] = 0 dec
Serial number = 111923E

r7844[0...1] Memory card/device memory firmware version / Mem_crd/dev_mem FW

CU_S110-DP, CU_S110-CAN, CU_S110-PN

Can be changed: -	**Calculated:** -	**Access level:** 1
Data type: Unsigned32	**Dyn. index:** -	**Func. diagram:** -
P-Group: -	**Unit group:** -	**Unit selection:** -
Not for motor type: -	**Scaling:** -	**Expert list:** 1
Min	**Max**	**Factory setting**
-	-	-

Description: Displays the version of the firmware stored on the memory card/device memory.
Index 0: Firmware version internal (e.g. 01203300)
Index 1: Firmware version external (e.g. 01020000 -> 1.2)

r7850[0...23] Drive object operational/not operational / DO ready for oper

CU_S110-DP, CU_S110-CAN, CU_S110-PN

Can be changed: -	**Calculated:** -	**Access level:** 4
Data type: Integer16	**Dyn. index:** -	**Func. diagram:** -
P-Group: -	**Unit group:** -	**Unit selection:** -
Not for motor type: -	**Scaling:** -	**Expert list:** 1
Min	**Max**	**Factory setting**
-32786	32767	-

Description: Displays whether, for an activated drive object, all activated topology components are available or not (or whether these can be addressed).
0: Drive object not ready for operation
1: Drive object ready for operation

p7852 Number of indices for r7853 / Qty indices r7853

CU_S110-DP, CU_S110-CAN, CU_S110-PN

Can be changed: U, T	**Calculated:** -	**Access level:** 4
Data type: Unsigned16	**Dyn. index:** -	**Func. diagram:** -
P-Group: -	**Unit group:** -	**Unit selection:** -
Not for motor type: -	**Scaling:** -	**Expert list:** 1
Min	**Max**	**Factory setting**
1	200	1

Description: Displays the number of indices for r7853[0...n].
This corresponds to the number of DRIVE-CLiQ components that are in the target topology.
Dependency: Refer to: r7853
Note: The values are valid if all available Control Units adopt the "Initialization finished" state (r3988 = 800) following power-up.

r7853[0...n] Component available/not available / Comp present

CU_S110-DP, CU_S110-CAN, CU_S110-PN

Can be changed: -	**Calculated:** -	**Access level:** 4
Data type: Unsigned16	**Dyn. index:** p7852	**Func. diagram:** -
P-Group: -	**Unit group:** -	**Unit selection:** -
Not for motor type: -	**Scaling:** -	**Expert list:** 1
Min	**Max**	**Factory setting**
0000 hex	FFFF hex	-

Description: Displays the component and whether this component is currently present.
High byte: Component number
Low byte: 0/1 (not available/available)
Dependency: Refer to: p7852
Note: The values are valid if all available Control Units adopt the "Initialization finished" state (r3988 = 800) following power-up.

p7857 Sub-boot mode / Sub-boot mode

SERVO_S110-DP, SERVO_S110-CAN, SERVO_S110-PN

Can be changed: U, T	**Calculated:** -	**Access level:** 4
Data type: Integer16	**Dyn. index:** -	**Func. diagram:** -
P-Group: -	**Unit group:** -	**Unit selection:** -
Not for motor type: -	**Scaling:** -	**Expert list:** 1
Min	**Max**	**Factory setting**
0	1	1

Description: Sets the mode for the sub-boot.
Value:
0: Sub-boot manual
1: Sub-boot automatic
Note: For p7857 = 0 (manual sub-boot) the following applies:
The parameter should be set to 1 to start the sub-boot.

p7859[0...199] Component number global / Comp_no global

CU_S110-DP, CU_S110-CAN, CU_S110-PN

Can be changed: U, T	**Calculated:** -	**Access level:** 4
Data type: Integer16	**Dyn. index:** -	**Func. diagram:** -
P-Group: -	**Unit group:** -	**Unit selection:** -
Not for motor type: -	**Scaling:** -	**Expert list:** 0
Min	**Max**	**Factory setting**
-32786	32767	0

Description: Sets the global and unique component number in a drive system with several Control Units.
Each index of the parameter corresponds to a possible local component number on the corresponding Control Unit.
The indices are allocated to the global component numbers as follows:
p7859[0]: Not used
p7859[1]: Sets the global component number for the local component number 1
p7859[2]: Sets the global component number for the local component number 2
...
p7859[199]: Sets the global component number for the local component number 199

Notice: This parameter is preferably set via suitable commissioning software (e.g. UpdateAgent, STARTER, SCOUT).
Changing the parameter via the AOP (Advanced Operator Panel) or BOP (Basic Operator Panel) can destroy a valid unique setting.

Note: The parameter is not influenced by setting the factory setting.

r7867 Status/configuration changes global / Changes global

CU_S110-DP, CU_S110-CAN, CU_S110-PN

Can be changed: -	**Calculated:** -	**Access level:** 4
Data type: Unsigned32	**Dyn. index:** -	**Func. diagram:** -
P-Group: -	**Unit group:** -	**Unit selection:** -
Not for motor type: -	**Scaling:** -	**Expert list:** 1
Min	**Max**	**Factory setting**
-	-	-

Description: Displays status and configuration changes of all of the drive objects in the complete unit.
When changing the status or the configuration of the Control Unit or a drive object, the value of this parameter is incremented.

Dependency: Refer to: r7868, r7869, r7870

r7868[0...24] Configuration changes drive object reference / Config_chng DO ref

CU_S110-DP, CU_S110-CAN, CU_S110-PN

Can be changed: -	**Calculated:** -	**Access level:** 4
Data type: Unsigned32	**Dyn. index:** -	**Func. diagram:** -
P-Group: -	**Unit group:** -	**Unit selection:** -
Not for motor type: -	**Scaling:** -	**Expert list:** 1
Min	**Max**	**Factory setting**
-	-	-

Description: Reference to the drive objects whose configuration has changed.
Index 0:
When changing one of the following indices, then the value in this index is increased.
Index 1...n:
The drive object with object number in p0101[n-1] has changed its configuration.
Example:
r7868[3] was incremented since the last time it was read.
--> the configuration of the drive object with object number in p0101[2] was changed.

Index: [0] = Sum of the following indices
[1] = Object number in p0101[0]
[2] = Object number in p0101[1]
[3] = Object number in p0101[2]
[4] = Object number in p0101[3]
[5] = Object number in p0101[4]
[6] = Object number in p0101[5]

[7] = Object number in p0101[6]
[8] = Object number in p0101[7]
[9] = Object number in p0101[8]
[10] = Object number in p0101[9]
[11] = Object number in p0101[10]
[12] = Object number in p0101[11]
[13] = Object number in p0101[12]
[14] = Object number in p0101[13]
[15] = Object number in p0101[14]
[16] = Object number in p0101[15]
[17] = Object number in p0101[16]
[18] = Object number in p0101[17]
[19] = Object number in p0101[18]
[20] = Object number in p0101[19]
[21] = Object number in p0101[20]
[22] = Object number in p0101[21]
[23] = Object number in p0101[22]
[24] = Object number in p0101[23]

Dependency: Refer to: p0101, r7867, r7871

r7869[0...24] Status changes drive object reference / Status_chng DO ref

CU_S110-DP, CU_S110-CAN, CU_S110-PN

Can be changed: -	**Calculated:** -	**Access level:** 4
Data type: Unsigned32	**Dyn. index:** -	**Func. diagram:** -
P-Group: -	**Unit group:** -	**Unit selection:** -
Not for motor type: -	**Scaling:** -	**Expert list:** 1
Min	**Max**	**Factory setting**
-	-	-

Description: Reference to the drive objects whose status has changed.
Index 0:
When changing one of the following indices, then the value in this index is increased.
Index 1...n:
The drive object with object number in p0101[n-1] has changed its status.
Example:
r7868[3] was incremented since the last time it was read.
--> the status of the drive object with object number in p0101[2] was changed.

Index: [0] = Sum of the following indices
[1] = Object number in p0101[0]
[2] = Object number in p0101[1]
[3] = Object number in p0101[2]
[4] = Object number in p0101[3]
[5] = Object number in p0101[4]
[6] = Object number in p0101[5]
[7] = Object number in p0101[6]
[8] = Object number in p0101[7]
[9] = Object number in p0101[8]
[10] = Object number in p0101[9]
[11] = Object number in p0101[10]
[12] = Object number in p0101[11]
[13] = Object number in p0101[12]
[14] = Object number in p0101[13]
[15] = Object number in p0101[14]
[16] = Object number in p0101[15]
[17] = Object number in p0101[16]
[18] = Object number in p0101[17]
[19] = Object number in p0101[18]
[20] = Object number in p0101[19]
[21] = Object number in p0101[20]
[22] = Object number in p0101[21]
[23] = Object number in p0101[22]
[24] = Object number in p0101[23]

Dependency: Refer to: p0101, r7867, r7872

r7870[0...7] Configuration changes global / Config_chng global

CU_S110-DP, CU_S110-CAN, CU_S110-PN

Can be changed: -	**Calculated:** -	**Access level:** 4
Data type: Unsigned32	**Dyn. index:** -	**Func. diagram:** -
P-Group: -	**Unit group:** -	**Unit selection:** -
Not for motor type: -	**Scaling:** -	**Expert list:** 1
Min	**Max**	**Factory setting**
-	-	-

Description: Displays the configuration changes of all of the drive objects in the complete unit.

Index:
[0] = Sum of the following indices
[1] = r7871[0] of a drive object
[2] = p0101 or r0102
[3] = PROFIBUS configuration (p0978)
[4] = DRIVE-CLiQ actual topology (r9900 or r9901)
[5] = DRIVE-CLiQ target topology (r9902 or r9903)
[6] = DRIVE-CLiQ ports (p0109)
[7] = OA applications

Dependency: Refer to: r7867, r7871

Note:
Index 0:
When changing one of the following indices, then the value in this index is incremented.
Index 1:
Drive object configuration. When changing r7871[0] on a drive object, the value in this index is incremented.
Index 2:
Drive object, configuration unit. When changing either p0101 or r0102, the value in this index is incremented.
Index 3:
PROFIBUS configuration unit. When changing p0978, the value in this index is incremented.
Index 4:
DRIVE-CLiQ actual topology. When changing either r9900 or r9901, the value in this index is incremented.
Index 5:
DRIVE-CLiQ target topology. When changing either p9902 or p9903, the value in this index is incremented.
Index 6:
DRIVE-CLiQ ports. When changing p0109, the value in this index is incremented.
Index 7:
OA applications. When changing OA applications, the value in this index is incremented.

r7871[0...10] Configuration changes drive object / Config_chng DO

CU_S110-DP, CU_S110-CAN, CU_S110-PN

Can be changed: -	**Calculated:** -	**Access level:** 4
Data type: Unsigned32	**Dyn. index:** -	**Func. diagram:** -
P-Group: -	**Unit group:** -	**Unit selection:** -
Not for motor type: -	**Scaling:** -	**Expert list:** 1
Min	**Max**	**Factory setting**
-	-	-

Description: Displays the configuration changes on the drive object.

Index:
[0] = Sum of the following indices
[1] = p0107 or p0108
[2] = Drive object name (p0199)
[3] = Structure-relevant parameters (e.g. p0180)
[4] = BICO interconnections
[5] = Activate/de-activate drive object
[6] = Data backup required
[7] = Reserved
[8] = Reference or changeover parameters (e.g. p2000)
[9] = Parameter count through Drive Control Chart (DCC)
[10] = p0107 or p0108

Dependency: Refer to: r7868, r7870

Note: Re index 0:
When changing one of the following indices, then the value in this index is incremented.
Re index 1:
Drive object commissioning: When changing either p0107 or p0108, the value in this index is incremented.
Re index 2:
Drive object name. When changing p0199, the value in this index is incremented.
Re index 3:
Drive object structure. When changing a parameter that is relevant for the structure (e.g. number of data sets), the value in this index is incremented.
Re index 4:
Drive object BICO interconnections. When changing r3977, the value in this index is incremented.
Re index 5:
Drive object activity: When changing p0105, the value in this index is incremented.
Re index 6:
Drive object, data save.
0: There are no parameter changes to save.
1: There are parameter changes to save.
Re index 8:
Drive object changeover of units. When changing reference or changeover parameters (e.g. p2000, p0304), the value in this index is incremented.
Re index 9:
Drive object parameter count. When changing the number of parameters by loading Drive Control Chart (DCC), the value in this index is incremented.
Re index 10:
Drive object configuration. When changing either p0107 or p0108, the value in this index is incremented.

r7871[0...15] Configuration changes drive object / Config_chng DO

SERVO_S110-DP, SERVO_S110-CAN, SERVO_S110-PN

Can be changed: -	**Calculated:** -	**Access level:** 4
Data type: Unsigned32	**Dyn. index:** -	**Func. diagram:** -
P-Group: -	**Unit group:** -	**Unit selection:** -
Not for motor type: -	**Scaling:** -	**Expert list:** 1
Min	**Max**	**Factory setting**
-	-	-

Description: Displays the configuration changes on the drive object.

Index:
[0] = Sum of the following indices
[1] = p0010, p0107 or p0108
[2] = Drive object name (p0199)
[3] = Structure-relevant parameters (e.g. p0180)
[4] = BICO interconnections
[5] = Activate/de-activate drive object
[6] = Data backup required
[7] = Activate/de-activate component
[8] = Reference or changeover parameters (e.g. p2000)
[9] = Parameter count through Drive Control Chart (DCC)
[10] = p0107 or p0108
[11] = p0530 or p0531
[12] = Reserved
[13] = Reserved
[14] = Reserved
[15] = SERVO or VECTOR (e.g. p0300)

Dependency: Refer to: r7868, r7870

Note: Re index 0:
When changing one of the following indices, then the value in this index is incremented.
Re index 1:
Drive object commissioning: When changing p0010, p0107 or p0108, the value in this index is incremented.
Re index 2:
Drive object name. When changing p0199, the value in this index is incremented.

Re index 3:
Drive object structure. When changing a parameter that is relevant for the structure (e.g. number of data sets), the value in this index is incremented.
Re index 4:
Drive object BICO interconnections. When changing r3977, the value in this index is incremented.
Re index 5:
Drive object activity: When changing p0105, the value in this index is incremented.
Re index 6:
Drive object, data save.
0: There are no parameter changes to save.
1: There are parameter changes to save.
Re index 7:
Drive object component activity: When changing either p0125 or p0145, the value in this index is incremented.
Re index 8:
Drive object changeover of units. When changing reference or changeover parameters (e.g. p2000, p0304), the value in this index is incremented.
Re index 9:
Drive object parameter count. When changing the number of parameters by loading Drive Control Chart (DCC), the value in this index is incremented.
Re index 10:
Drive object configuration. When changing either p0107 or p0108, the value in this index is incremented.
Re index 11:
Drive object bearing. When changing p0530 or p0531, the value in this index is incremented.
Re index 15:
SERVO/VECTOR configuration. When changing p0300, p0301 or p0400, the value in this index is incremented.

r7872[0...3] Status changes drive object / Status_chng DO

CU_S110-DP, CU_S110-CAN, CU_S110-PN, SERVO_S110-DP, SERVO_S110-CAN, SERVO_S110-PN

Can be changed: -	**Calculated:** -	**Access level:** 4
Data type: Unsigned32	**Dyn. index:** -	**Func. diagram:** -
P-Group: -	**Unit group:** -	**Unit selection:** -
Not for motor type: -	**Scaling:** -	**Expert list:** 1
Min	**Max**	**Factory setting**
-	-	-

Description: Displays the status changes on the drive object.
Index 0:
When changing one of the following indices, then the value in this index is incremented.
Index 1:
Drive object faults. When changing r0944, the value in this index is incremented.
Index 2:
Drive object alarms. When changing r2121, the value in this index is incremented.
Index 3:
Drive object safety messages. When changing r9744, the value in this index is incremented.

Index: [0] = Sum of the following indices
[1] = Faults (r0944)
[2] = Alarms (r2121)
[3] = Safety messages (r9744)

Dependency: Refer to: r7869

p7900[0...23] Drive objects priority / DO priority

CU_S110-DP, CU_S110-CAN, CU_S110-PN

Can be changed: U, T	**Calculated:** -	**Access level:** 4
Data type: Unsigned16	**Dyn. index:** -	**Func. diagram:** -
P-Group: -	**Unit group:** -	**Unit selection:** -
Not for motor type: -	**Scaling:** -	**Expert list:** 1
Min	**Max**	**Factory setting**
0	65535	0

Description: Sets the priority for processing the existing drive objects in the system.

The parameter enables a free sequence to be set for processing the drive objects. For this purpose all the drive object numbers existing in the system have to be written in the desired sequence into the corresponding indices of the parameter. After re-booting this sequence will be effective without a plausibility check.

With the factory setting the following priorities regarding processing are applicable:

- The drive objects are pre-sorted according to their type as follows: CONTROL UNIT, INFEED, SERVO, VECTOR, TM, HUB, CU-LINK

- If they are of the same type, they are sorted in ascending order according to their drive object number, i.e. the lower the number, the higher the priority for processing.

Index:
[0] = Drive object number Control Unit
[1] = Drive object number object 1
[2] = Drive object number object 2
[3] = Drive object number object 3
[4] = Drive object number object 4
[5] = Drive object number object 5
[6] = Drive object number object 6
[7] = Drive object number object 7
[8] = Drive object number object 8
[9] = Drive object number object 9
[10] = Drive object number object 10
[11] = Drive object number object 11
[12] = Drive object number object 12
[13] = Drive object number object 13
[14] = Drive object number object 14
[15] = Drive object number object 15
[16] = Drive object number object 16
[17] = Drive object number object 17
[18] = Drive object number object 18
[19] = Drive object number object 19
[20] = Drive object number object 20
[21] = Drive object number object 21
[22] = Drive object number object 22
[23] = Drive object number object 23

Notice: This parameter may only be used by qualified service personnel.

Note: If the same drive object numbers are used and if the existing drive object numbers in the system are entered incompletely, the content of this parameter is ignored entirely. The behavior as with factory setting will then become effective.

r7901[0...43] Sampling times / t_sample

CU_S110-DP, CU_S110-CAN, CU_S110-PN

Can be changed: -	**Calculated:** -	**Access level:** 4
Data type: FloatingPoint32	**Dyn. index:** -	**Func. diagram:** -
P-Group: -	**Unit group:** -	**Unit selection:** -
Not for motor type: -	**Scaling:** -	**Expert list:** 1
Min	**Max**	**Factory setting**
- [µs]	- [µs]	- [µs]

Description: Displays the sampling times currently present on the drive unit.

For r7901[x] = 0, the following applies: The time slice is not active.

r7903 Hardware sampling times still assignable / HW t_samp free

CU_S110-DP, CU_S110-CAN, CU_S110-PN

Can be changed: -	**Calculated:** -	**Access level:** 3
Data type: Unsigned16	**Dyn. index:** -	**Func. diagram:** -
P-Group: -	**Unit group:** -	**Unit selection:** -
Not for motor type: -	**Scaling:** -	**Expert list:** 1
Min	**Max**	**Factory setting**
-	-	-

Description: Displays the number of hardware sampling times that can still be assigned.
These free sampling times can be used by OA applications such as DCC (Drive Control Chart) or FBLOCKS (free function blocks).

Note: OA: Open Architecture

p8500[0...7] BI: Data transfer 0 bitwise / Transfer 0 bit

CU_S110-DP, CU_S110-CAN, CU_S110-PN

Can be changed: U, T	**Calculated:** -	**Access level:** 2
Data type: Unsigned32 / Binary	**Dyn. index:** -	**Func. diagram:** -
P-Group: -	**Unit group:** -	**Unit selection:** -
Not for motor type: -	**Scaling:** -	**Expert list:** 1
Min	**Max**	**Factory setting**
-	-	0

Description: Sets the signal source for bitwise data transfer.
These signals are available in BO: r8510.0 ... 7 for further interconnection.

Index:
[0] = Send signal to BO: r8510.0
[1] = Send signal to BO: r8510.1
[2] = Send signal to BO: r8510.2
[3] = Send signal to BO: r8510.3
[4] = Send signal to BO: r8510.4
[5] = Send signal to BO: r8510.5
[6] = Send signal to BO: r8510.6
[7] = Send signal to BO: r8510.7

Dependency: Refer to: r8510

p8501[0...21] BI: Data transfer 1 bitwise / Transfer 1 bit

CU_S110-DP, CU_S110-CAN, CU_S110-PN

Can be changed: U, T	**Calculated:** -	**Access level:** 2
Data type: Unsigned32 / Binary	**Dyn. index:** -	**Func. diagram:** -
P-Group: -	**Unit group:** -	**Unit selection:** -
Not for motor type: -	**Scaling:** -	**Expert list:** 1
Min	**Max**	**Factory setting**
-	-	0

Description: Sets the signal source for bitwise data transfer.
These signals are available in BO: r8511.0 ... 15 for further interconnection.

Index:
[0] = Send signal to BO: r8511.0
[1] = Send signal to BO: r8511.1
[2] = Send signal to BO: r8511.2
[3] = Send signal to BO: r8511.3
[4] = Send signal to BO: r8511.4
[5] = Send signal to BO: r8511.5
[6] = Send signal to BO: r8511.6
[7] = Send signal to BO: r8511.7
[8] = Send signal to BO: r8511.8
[9] = Send signal to BO: r8511.9
[10] = Send signal to BO: r8511.10
[11] = Send signal to BO: r8511.11
[12] = Send signal to BO: r8511.12
[13] = Send signal to BO: r8511.13
[14] = Send signal to BO: r8511.14
[15] = Send signal to BO: r8511.15

[16] = Send signal to BO: r8511.16
[17] = Send signal to BO: r8511.17
[18] = Send signal to BO: r8511.18
[19] = Send signal to BO: r8511.19
[20] = Send signal to BO: r8511.20
[21] = Send signal to BO: r8511.21

Dependency: Refer to: r8511

p8502 CI: Data transfer 0 wordwise / Transfer 0 word

CU_S110-DP, CU_S110-CAN, CU_S110-PN

Can be changed: U, T	**Calculated:** -	**Access level:** 2
Data type: Unsigned32 / Integer32	**Dyn. index:** -	**Func. diagram:** -
P-Group: -	**Unit group:** -	**Unit selection:** -
Not for motor type: -	**Scaling:** PERCENT	**Expert list:** 1
Min	**Max**	**Factory setting**
-	-	0

Description: Sets the signal source for the wordwise data transfer (process signal).
This signal value is available in CO: r8512 for further interconnection.

Dependency: Refer to: r8512

p8503 CI: Data transfer 1 wordwise / Transfer 1 word

CU_S110-DP, CU_S110-CAN, CU_S110-PN

Can be changed: U, T	**Calculated:** -	**Access level:** 2
Data type: Unsigned32 / Integer32	**Dyn. index:** -	**Func. diagram:** -
P-Group: -	**Unit group:** -	**Unit selection:** -
Not for motor type: -	**Scaling:** PERCENT	**Expert list:** 1
Min	**Max**	**Factory setting**
-	-	0

Description: Sets the signal source for the wordwise data transfer (process signal).
This signal value is available in CO: r8513 for further interconnection.

Dependency: Refer to: r8513

p8504 CI: Data transfer 2 wordwise / Transfer 2 word

CU_S110-DP, CU_S110-CAN, CU_S110-PN

Can be changed: U, T	**Calculated:** -	**Access level:** 2
Data type: Unsigned32 / Integer32	**Dyn. index:** -	**Func. diagram:** -
P-Group: -	**Unit group:** -	**Unit selection:** -
Not for motor type: -	**Scaling:** PERCENT	**Expert list:** 1
Min	**Max**	**Factory setting**
-	-	0

Description: Sets the signal source for the wordwise data transfer (process signal).
This signal value is available in CO: r8514 for further interconnection.

Dependency: Refer to: r8514

p8505 CI: Data transfer 3 wordwise / Transfer 3 word

CU_S110-DP, CU_S110-CAN, CU_S110-PN

Can be changed: U, T	**Calculated:** -	**Access level:** 2
Data type: Unsigned32 / Integer32	**Dyn. index:** -	**Func. diagram:** -
P-Group: -	**Unit group:** -	**Unit selection:** -
Not for motor type: -	**Scaling:** PERCENT	**Expert list:** 1
Min	**Max**	**Factory setting**
-	-	0

Description: Sets the signal source for the wordwise data transfer (process signal).
This signal value is available in CO: r8515 for further interconnection.

Dependency: Refer to: r8515

r8510.0...7 BO: Data transfer 0 receive bitwise / Trans 0 recv bit

CU_S110-DP, CU_S110-CAN, CU_S110-PN

Can be changed: - **Calculated:** - **Access level:** 2
Data type: Unsigned32 **Dyn. index:** - **Func. diagram:** -
P-Group: - **Unit group:** - **Unit selection:** -
Not for motor type: - **Scaling:** - **Expert list:** 1

Min	Max	Factory setting
-	-	-

Description: Displays the signals of the bitwise received data.
These signals were interconnected and transferred via BI: p8500[0...7].

Bit field:

Bit	Signal name	1 signal	0 signal	FP
00	Receive signal from BI: p8500	ON	OFF	-
01	Receive signal from BI: p8500	ON	OFF	-
02	Receive signal from BI: p8500	ON	OFF	-
03	Receive signal from BI: p8500	ON	OFF	-
04	Receive signal from BI: p8500	ON	OFF	-
05	Receive signal from BI: p8500	ON	OFF	-
06	Receive signal from BI: p8500	ON	OFF	-
07	Receive signal from BI: p8500	ON	OFF	-

Dependency: Refer to: p8500

r8511.0...21 BO: Data transfer 1 receive bitwise / Trans 1 recv bit

CU_S110-DP, CU_S110-CAN, CU_S110-PN

Can be changed: - **Calculated:** - **Access level:** 2
Data type: Unsigned32 **Dyn. index:** - **Func. diagram:** -
P-Group: - **Unit group:** - **Unit selection:** -
Not for motor type: - **Scaling:** - **Expert list:** 1

Min	Max	Factory setting
-	-	-

Description: Displays the signals of the bitwise received data.
These signals were interconnected and transferred via BI: p8501[0...15].

Bit field:

Bit	Signal name	1 signal	0 signal	FP
00	Receive signal from BI: p8501	ON	OFF	-
01	Receive signal from BI: p8501	ON	OFF	-
02	Receive signal from BI: p8501	ON	OFF	-
03	Receive signal from BI: p8501	ON	OFF	-
04	Receive signal from BI: p8501	ON	OFF	-
05	Receive signal from BI: p8501	ON	OFF	-
06	Receive signal from BI: p8501	ON	OFF	-
07	Receive signal from BI: p8501	ON	OFF	-
08	Receive signal from BI: p8501	ON	OFF	-
09	Receive signal from BI: p8501	ON	OFF	-
10	Receive signal from BI: p8501	ON	OFF	-
11	Receive signal from BI: p8501	ON	OFF	-
12	Receive signal from BI: p8501	ON	OFF	-
13	Receive signal from BI: p8501	ON	OFF	-
14	Receive signal from BI: p8501	ON	OFF	-
15	Receive signal from BI: p8501	ON	OFF	-
16	Receive signal from BI: p8501	ON	OFF	-
17	Receive signal from BI: p8501	ON	OFF	-
18	Receive signal from BI: p8501	ON	OFF	-
19	Receive signal from BI: p8501	ON	OFF	-
20	Receive signal from BI: p8501	ON	OFF	-
21	Receive signal from BI: p8501	ON	OFF	-

Dependency: Refer to: p8501

r8512 CO: Data transfer 0 receive wordwise / Trans 0 recv word

CU_S110-DP, CU_S110-CAN, CU_S110-PN

Can be changed: -	**Calculated:** -	**Access level:** 2
Data type: FloatingPoint32	**Dyn. index:** -	**Func. diagram:** -
P-Group: -	**Unit group:** -	**Unit selection:** -
Not for motor type: -	**Scaling:** PERCENT	**Expert list:** 1
Min	**Max**	**Factory setting**
- [%]	- [%]	- [%]

Description: Displays the signals of the wordwise received data (process signal).
This signal value is interconnected and transferred via CI: p8502.

Dependency: Refer to: p8502

r8513 CO: Data transfer 1 receive wordwise / Trans 1 recv word

CU_S110-DP, CU_S110-CAN, CU_S110-PN

Can be changed: -	**Calculated:** -	**Access level:** 2
Data type: FloatingPoint32	**Dyn. index:** -	**Func. diagram:** -
P-Group: -	**Unit group:** -	**Unit selection:** -
Not for motor type: -	**Scaling:** PERCENT	**Expert list:** 1
Min	**Max**	**Factory setting**
- [%]	- [%]	- [%]

Description: Displays the signals of the wordwise received data (process signal).
This signal value is interconnected and transferred via CI: p8503.

Dependency: Refer to: p8503

r8514 CO: Data transfer 2 receive wordwise / Trans 2 recv word

CU_S110-DP, CU_S110-CAN, CU_S110-PN

Can be changed: -	**Calculated:** -	**Access level:** 2
Data type: FloatingPoint32	**Dyn. index:** -	**Func. diagram:** -
P-Group: -	**Unit group:** -	**Unit selection:** -
Not for motor type: -	**Scaling:** PERCENT	**Expert list:** 1
Min	**Max**	**Factory setting**
- [%]	- [%]	- [%]

Description: Displays the signals of the wordwise received data (process signal).
This signal value is interconnected and transferred via CI: p8504.

Dependency: Refer to: p8504

r8515 CO: Data transfer 3 receive wordwise / Trans 3 recv word

CU_S110-DP, CU_S110-CAN, CU_S110-PN

Can be changed: -	**Calculated:** -	**Access level:** 2
Data type: FloatingPoint32	**Dyn. index:** -	**Func. diagram:** -
P-Group: -	**Unit group:** -	**Unit selection:** -
Not for motor type: -	**Scaling:** PERCENT	**Expert list:** 1
Min	**Max**	**Factory setting**
- [%]	- [%]	- [%]

Description: Displays the signals of the wordwise received data (process signal).
This signal value is interconnected and transferred via CI: p8505.

Dependency: Refer to: p8505

p8550 AOP LOCAL/REMOTE / AOP LOCAL/REMOTE

CU_S110-DP, CU_S110-CAN, CU_S110-PN

Can be changed: U, T	**Calculated:** -	**Access level:** 4
Data type: Unsigned32	**Dyn. index:** -	**Func. diagram:** -
P-Group: -	**Unit group:** -	**Unit selection:** -
Not for motor type: -	**Scaling:** -	**Expert list:** 1
Min	**Max**	**Factory setting**
-	-	0000 0000 0000 1001 bin

Description: Setting for saving the actual configuration of the Advanced Operator Panel (AOP).

Bit field:

Bit	Signal name	1 signal	0 signal	FP
00	LOCAL save	Yes	No	-
01	Start in LOCAL	Yes	No	-
02	Change in oper	Yes	No	-
03	OFF acts like OFF1	Yes	No	-
04	OFF acts like OFF2	Yes	No	-
05	OFF acts like OFF3	Yes	No	-
06	Reserved	Yes	No	-
07	CW/CCW active	Yes	No	-
08	Jog active	Yes	No	-
09	Save speed setpoint	Yes	No	-
14	Inhibit operation	Yes	No	-
15	Inhibit parameterization	Yes	No	-

r8571[0...39] Macro Binector Input (BI) / Macro BI

SERVO_S110-DP, SERVO_S110-CAN, SERVO_S110-PN

Can be changed: -	**Calculated:** -	**Access level:** 1
Data type: Unsigned32	**Dyn. index:** -	**Func. diagram:** -
P-Group: -	**Unit group:** -	**Unit selection:** -
Not for motor type: -	**Scaling:** -	**Expert list:** 0
Min	**Max**	**Factory setting**
-	-	-

Description: Displays the ACX file saved in the appropriate directory in the non-volatile memory.

Note: For a value = 9999999, the following applies: The read operation is still running.

r8572[0...39] Macro Connector Inputs (CI) for speed setpoints / Macro CI n_set

SERVO_S110-DP, SERVO_S110-CAN, SERVO_S110-PN

Can be changed: -	**Calculated:** -	**Access level:** 1
Data type: Unsigned32	**Dyn. index:** -	**Func. diagram:** -
P-Group: -	**Unit group:** -	**Unit selection:** -
Not for motor type: -	**Scaling:** -	**Expert list:** 0
Min	**Max**	**Factory setting**
-	-	-

Description: Displays the ACX file saved in the appropriate directory in the non-volatile memory.

Note: For a value = 9999999, the following applies: The read operation is still running.

r8573[0...39] Macro Connector Inputs (CI) for torque setpoints / Macro CI M_set

SERVO_S110-DP, SERVO_S110-CAN, SERVO_S110-PN

Can be changed: -	**Calculated:** -	**Access level:** 1
Data type: Unsigned32	**Dyn. index:** -	**Func. diagram:** -
P-Group: -	**Unit group:** -	**Unit selection:** -
Not for motor type: -	**Scaling:** -	**Expert list:** 0
Min	**Max**	**Factory setting**
-	-	-

Description: Displays the ACX file saved in the appropriate directory in the non-volatile memory.

Note: For a value = 9999999, the following applies: The read operation is still running.

r8600 CAN device type / Device type

CU_S110-CAN	**Can be changed:** -	**Calculated:** -	**Access level:** 3
	Data type: Unsigned32	**Dyn. index:** -	**Func. diagram:** -
	P-Group: Communications	**Unit group:** -	**Unit selection:** -
	Not for motor type: -	**Scaling:** -	**Expert list:** 1
	Min	**Max**	**Factory setting**
	-	-	-

Description: Displays all of the devices connected to the CAN bus after run-up.
r8600
= 00000000 hex: No drive recognized.
= 00020192 hex: 1 Servo drive

Note: Corresponds to the CANopen object 1000 hex.
For each detected drive, the device type is displayed in object 67FF hex.

r8601 CAN error register / Error register

CU_S110-CAN	**Can be changed:** -	**Calculated:** -	**Access level:** 3
	Data type: Unsigned8	**Dyn. index:** -	**Func. diagram:** -
	P-Group: Communications	**Unit group:** -	**Unit selection:** -
	Not for motor type: -	**Scaling:** -	**Expert list:** 1
	Min	**Max**	**Factory setting**
	-	-	-

Description: Displays the error register for CANopen.
Bit 0: Generic error
0 signal: No error present.
1 signal: Generic error present.
Bit 1 ... 3: Not supported (always a 0 signal)
Bit 4: Communications error
0 signal: There is no message in the range 8700 ... 8799.
1 signal: There is at least one message (fault or alarm) in the range 8700 ... 8799.
Bit 5 ... 6: Not supported (always a 0 signal)
Bit 7:; Fault outside the range 8700 ... 8799
0 signal: There is no fault outside the range 8700 ... 8799.
1 signal: There is at least one fault outside the range 8700 ... 8799.

Note: Corresponds to the CANopen object 1001 hex.

p8602 CAN SYNC object / SYNC object

CU_S110-CAN	**Can be changed:** T	**Calculated:** -	**Access level:** 3
	Data type: Unsigned32	**Dyn. index:** -	**Func. diagram:** -
	P-Group: Communications	**Unit group:** -	**Unit selection:** -
	Not for motor type: -	**Scaling:** -	**Expert list:** 1
	Min	**Max**	**Factory setting**
	0000 hex	FFFF FFFF hex	0080 hex

Description: Sets the SYNC object parameter for the following CANopen objects:
- 1005 hex: COB-ID

Note: SINAMICS operates as SYNC load.
COB-ID: CAN object identification

p8603 CAN COB-ID Emergency Message / COB-ID EMCY Msg

CU_S110-CAN	**Can be changed:** T	**Calculated:** -	**Access level:** 3
	Data type: Unsigned32	**Dyn. index:** -	**Func. diagram:** -
	P-Group: Communications	**Unit group:** -	**Unit selection:** -
	Not for motor type: -	**Scaling:** -	**Expert list:** 1
	Min	**Max**	**Factory setting**
	0000 hex	FFFF FFFF hex	0000 hex

Description: Sets the COB-ID for the emergency message (error telegram).
It corresponds to the CANopen objects:
- 1014 hex: COB-ID

Note: If, when downloading, the pre-set value 0 is downloaded, then the CANopen pre-set value 80 hex + Node-ID is automatically set.
Online, the value 0 is rejected as, according to the CANopen Standard, COB-ID 0 is not permitted here.
The changeover of the node ID using the hardware switch at the Control Unit or per software has no effect on the COB-ID EMCY. The saved value remains effective.

p8604[0...1] CAN node guarding / Node guarding

CU_S110-CAN	**Can be changed:** T	**Calculated:** -	**Access level:** 3
	Data type: Unsigned16	**Dyn. index:** -	**Func. diagram:** -
	P-Group: -	**Unit group:** -	**Unit selection:** -
	Not for motor type: -	**Scaling:** -	**Expert list:** 1
	Min	**Max**	**Factory setting**
	0	65535	0

Description: Sets the node guarding parameter for the following CANopen objects:
- 100C hex: Guard Time
- 100D hex: Life Time Factor

The life time is derived by multiplying guard time by the life time factor.

Index: [0] = Time interval [ms] for new node guarding telegram
[1] = Factor for failure of the node guarding telegram

Dependency: Only adjustable if heartbeat time = 0 (heartbeat is disabled).
Refer to: p8606

Note: For p8604[0] = 0 and/or p8604[1] = 0, the node guarding protocol is not used.
Either node guarding or heartbeat can be used.

p8606 CAN Producer Heartbeat Time / Prod Heartb Time

CU_S110-CAN	**Can be changed:** T	**Calculated:** -	**Access level:** 3
	Data type: Unsigned16	**Dyn. index:** -	**Func. diagram:** -
	P-Group: -	**Unit group:** -	**Unit selection:** -
	Not for motor type: -	**Scaling:** -	**Expert list:** 1
	Min	**Max**	**Factory setting**
	0 [ms]	65535 [ms]	0 [ms]

Description: Sets the time [ms] to cyclically send heartbeat telegrams.
The smallest cycle time is 100 ms.
When a 0 is written, then heartbeat telegrams are not sent.

Dependency: Only adjustable if guard time = 0 (node guarding disabled).
Refer to: p8604

Note: Corresponds to the CANopen object 1017 hex.
Either node guarding or heartbeat can be used.

r8607[0...3] CAN Identity Object / Identity object

CU_S110-CAN	**Can be changed:** -	**Calculated:** -	**Access level:** 3
	Data type: Unsigned32	**Dyn. index:** -	**Func. diagram:** -
	P-Group: Communications	**Unit group:** -	**Unit selection:** -
	Not for motor type: -	**Scaling:** -	**Expert list:** 1
	Min	**Max**	**Factory setting**
	-	-	-

Description: General device information display.

Index: [0] = Vendor ID
[1] = Product code
[2] = Revision number
[3] = Serial number

Note: Corresponds to the CANopen object 1018 hex.

Re index 3:

The SINAMICS serial number comprises 60 bits. Of these bits, the following are displayed in this index:

Bits 0 ... 19: Consecutive number

Bits 20 ... 23: Production ID

- 0 hex: Development
- 1 hex: P1 unique number
- 2 hex: P2 unique number
- 3 hex: WA unique number
- 9 hex: Pattern
- F hex: All others

Bits 24 ... 27: Month of manufacture (0 means January, B means December)

Bits 28 ... 31: Year of manufacture (0 means 2002)

p8608[0...1] CAN Clear Bus Off Error / Clear bus off err

CU_S110-CAN	**Can be changed:** U, T	**Calculated:** -	**Access level:** 3
	Data type: Integer16	**Dyn. index:** -	**Func. diagram:** -
	P-Group: -	**Unit group:** -	**Unit selection:** -
	Not for motor type: -	**Scaling:** -	**Expert list:** 1
	Min	**Max**	**Factory setting**
	0	1	0

Description: As a result of a Bus Off error, the CAN controller is set into the initialization state.

Index 0:

The CAN controller is manually started after resolving the cause of the error with p8608[0] = 1

Index 1:

The automatic CAN bus start function is activated using p8608[1] = 1.

At 2 second intervals, the CAN controller is automatically restarted until the cause of the error has been resolved and a CAN connection has been established.

Value: 0: Inactive
1: Start CAN controller

Index: [0] = Manual controller start function
[1] = Activating the automatic controller start function

Note: Index 0:

This parameter is automatically reset to 0 after start.

p8609[0...1] CAN Error Behavior / Error behavior

CU_S110-CAN	**Can be changed:** T	**Calculated:** -	**Access level:** 3
	Data type: Integer16	**Dyn. index:** -	**Func. diagram:** -
	P-Group: -	**Unit group:** -	**Unit selection:** -
	Not for motor type: -	**Scaling:** -	**Expert list:** 1
	Min	**Max**	**Factory setting**
	0	2	1

Description: Sets the behavior of the CAN node referred to the communications error or equipment fault.

Value:
0: Pre-operational
1: No change
2: Stopped

Index:
[0] = Behavior for communication errors
[1] = Behavior for device faults

Note: Corresponds to the CANopen object 1029 hex.

r8610[0...1] CAN First Server SDO / First server SDO

CU_S110-CAN	**Can be changed:** -	**Calculated:** -	**Access level:** 3
	Data type: Unsigned32	**Dyn. index:** -	**Func. diagram:** -
	P-Group: Communications	**Unit group:** -	**Unit selection:** -
	Not for motor type: -	**Scaling:** -	**Expert list:** 1
	Min	**Max**	**Factory setting**
	-	-	-

Description: Displays the identifier (client/server and server/client) of the SDO channel.

Index:
[0] = Displays the COB ID from client to server
[1] = Displays the COB ID from server to client

Note: Corresponds to the CANopen object 1200 hex.
SDO: Service Data Object

p8611[0...82] CAN Pre-defined Error Field / Pre_def err field

CU_S110-CAN	**Can be changed:** U, T	**Calculated:** -	**Access level:** 3
	Data type: Unsigned32	**Dyn. index:** -	**Func. diagram:** -
	P-Group: -	**Unit group:** -	**Unit selection:** -
	Not for motor type: -	**Scaling:** -	**Expert list:** 1
	Min	**Max**	**Factory setting**
	0000 hex	FFFF 1000 hex	0000 hex

Description: Displays the Pre-defined Error Field of the CAN node.

It includes the number of all errors that have occurred, the number of errors that have occurred for each drive and the errors according to their history.

The first 16 bits represent the CANopen error code and the second 16 bits the SINAMICS error code.

Index 1 has the same structure - however, the drive object ID is in the second 16 bits instead of the SINAMICS error code.

CANopen error code:

0000 hex: No error present

8110 hex: Alarm A08751 present

8120 hex: Alarm A08752 present

8130 hex: Alarm A08700(F) with alarm value = 2 present

1000 hex: Generic error 1 present (there is at least one fault outside the range 8700 ... 8799)

1001 hex: Generic error 2 present (there is at least one alarm in the range 8700 ... 8799 with the exception of A08751, A08752, A08700)

All drive objects are acknowledged by writing the value 0 to the index 0. As soon as a fault has been acknowledged or an alarm cleared, then it is also cleared from the fault list.

Index:
[0] = Number of all faults in the drive unit
[1] = Most recent drive number / fault number
[2] = Number of faults drive 1
[3] = Fault 1/ drive 1
[4] = Fault 2/ drive 1
[5] = Fault 3/ drive 1
[6] = Fault 4/ drive 1
[7] = Fault 5/ drive 1
[8] = Fault 6/ drive 1
[9] = Fault 7/ drive 1
[10] = Fault 8/ drive 1
[11] = Number of faults drive 2
[12] = Fault 1/ drive 2
[13] = Fault 2/ drive 2
[14] = Fault 3/ drive 2
[15] = Fault 4/ drive 2
[16] = Fault 5/ drive 2
[17] = Fault 6/ drive 2
[18] = Fault 7/ drive 2
[19] = Fault 8/ drive 2
[20] = Number of faults drive 3
[21] = Fault 1/ drive 3
[22] = Fault 2/ drive 3
[23] = Fault 3/ drive 3
[24] = Fault 4/ drive 3
[25] = Fault 5/ drive 3
[26] = Fault 6/ drive 3
[27] = Fault 7/ drive 3
[28] = Fault 8/ drive 3
[29] = Number of faults drive 4
[30] = Fault 1/ drive 4
[31] = Fault 2/ drive 4
[32] = Fault 3/ drive 4
[33] = Fault 4/ drive 4
[34] = Fault 5/ drive 4
[35] = Fault 6/ drive 4
[36] = Fault 7/ drive 4
[37] = Fault 8/ drive 4
[38] = Number of faults drive 5
[39] = Fault 1/ drive 5
[40] = Fault 2/ drive 5
[41] = Fault 3/ drive 5
[42] = Fault 4/ drive 5
[43] = Fault 5/ drive 5
[44] = Fault 6/ drive 5
[45] = Fault 7/ drive 5
[46] = Fault 8/ drive 5
[47] = Number of faults drive 6
[48] = Fault 1/ drive 6
[49] = Fault 2/ drive 6
[50] = Fault 3/ drive 6
[51] = Fault 4/ drive 6
[52] = Fault 5/ drive 6
[53] = Fault 6/ drive 6
[54] = Fault 7/ drive 6
[55] = Fault 8/ drive 6
[56] = Number of faults drive 7
[57] = Fault 1/ drive 7
[58] = Fault 2/ drive 7
[59] = Fault 3/ drive 7
[60] = Fault 4/ drive 7
[61] = Fault 5/ drive 7
[62] = Fault 6/ drive 7
[63] = Fault 7/ drive 7
[64] = Fault 8/ drive 7
[65] = Number of faults drive 8

[66] = Fault 1/ drive 8
[67] = Fault 2/ drive 8
[68] = Fault 3/ drive 8
[69] = Fault 4/ drive 8
[70] = Fault 5/ drive 8
[71] = Fault 6/ drive 8
[72] = Fault 7/ drive 8
[73] = Fault 8/ drive 8
[74] = Number of faults Control Unit
[75] = Fault 1/Control Unit
[76] = Fault 2/Control Unit
[77] = Fault 3/Control Unit
[78] = Fault 4/Control Unit
[79] = Fault 5/Control Unit
[80] = Fault 6/Control Unit
[81] = Fault 7/Control Unit
[82] = Fault 8/Control Unit

Note: Corresponds to the CANopen object 1003 hex.

p8620 CAN Node-ID / Node ID

CU_S110-CAN

Can be changed: T	**Calculated:** -	**Access level:** 2
Data type: Unsigned8	**Dyn. index:** -	**Func. diagram:** -
P-Group: -	**Unit group:** -	**Unit selection:** -
Not for motor type: -	**Scaling:** -	**Expert list:** 1
Min	**Max**	**Factory setting**
1	127	126

Description: Display or setting of the CANopen Node ID.
The Node ID can be set as follows:
1) Using the address switch on the Control Unit.
--> p8620 can then only be read and displays the selected Node ID.
--> A change only becomes effective after a POWER ON.
--> CANopen Node ID and PROFIBUS address are identical.
2) Using p8620
--> Only if address 0 is set using the address switch.
--> the Node ID is set as standard to 126.
--> A change only becomes effective after save and POWER ON.

Dependency: Refer to: r8621

Note: Every node ID change only becomes effective after a POWER ON.
The active node ID is displayed in r8621.
The parameter is not influenced by setting the factory setting.
It is only possible to independently set CANopen node ID and the PROFIBUS address using p0918 and p8620 (prerequisite: the address 0 is set for the address switch).

r8621 CAN Node-ID active / Node ID active

CU_S110-CAN

Can be changed: -	**Calculated:** -	**Access level:** 3
Data type: Unsigned8	**Dyn. index:** -	**Func. diagram:** -
P-Group: Communications	**Unit group:** -	**Unit selection:** -
Not for motor type: -	**Scaling:** -	**Expert list:** 1
Min	**Max**	**Factory setting**
-	-	-

Description: Displays the active CANopen Node ID.

Dependency: Refer to: p8620

p8622 CAN bit rate / Bit rate

CU_S110-CAN	**Can be changed:** T	**Calculated:** -	**Access level:** 3
	Data type: Integer16	**Dyn. index:** -	**Func. diagram:** -
	P-Group: -	**Unit group:** -	**Unit selection:** -
	Not for motor type: -	**Scaling:** -	**Expert list:** 1
	Min	**Max**	**Factory setting**
	0	7	6

Description: Setting the bit rate for the CAN bus.
The appropriate bit timings are selected that are defined in p8623 in the associated sub-index.
Example:
Bit rate = 20 kbit/s --> p8622 = 6 --> associated bit timing is in p8623[6].

Value:
0: 1 Mbit/s
1: 800 kbit/s
2: 500 kbit/s
3: 250 kbit/s
4: 125 kbit/s
5: 50 kbit/s
6: 20 kbit/s
7: 10 kbit/s

Dependency: Refer to: p8623

Note: The parameter is not influenced by setting the factory setting.

p8623[0...7] CAN Bit Timing selection / Bit timing select

CU_S110-CAN	**Can be changed:** T	**Calculated:** -	**Access level:** 3
	Data type: Unsigned32	**Dyn. index:** -	**Func. diagram:** -
	P-Group: -	**Unit group:** -	**Unit selection:** -
	Not for motor type: -	**Scaling:** -	**Expert list:** 1
	Min	**Max**	**Factory setting**
	0000 hex	000F 7FFF hex	[0] 1405 hex [1] 1605 hex [2] 1C05 hex [3] 1C0B hex [4] 1C17 hex [5] 1C3B hex [6] 0002 1C15 hex [7] 0004 1C2B hex

Description: Sets the bit timing for the C_CAN controller to the associated and selected bit rate (p8622).
Bits are distributed to the following parameters of the C_CAN controller in p8623[0...7]:
Bit 0 ... 5: BRP (Baud Rate Prescaler)
Bit 6 ... 7: SJW (Synchronization Jump Width)
Bit 8 ... 11: TSEG1 (Time Segment 1, before the sampling point)
Bit 12 ... 14: TSEG2 (Time Segment 2, after the sampling point)
Bit 15: Reserved
Bit 16 ... 19: BRPE (Baud Rate Prescaler Extension)
Bit 20 ... 31: Reserved
Example:
Bit rate = 20 kbit/s --> p8622 = 6 --> associated bit timing is in p8623[6] --> 0001 2FB6

Recommendation: Use the factory setting when setting the bit timing.

Index:
[0] = 1 Mbit/s
[1] = 800 kbit/s
[2] = 500 kbit/s
[3] = 250 kbit/s
[4] = 125 kbit/s
[5] = 50 kbit/s

[6] = 20 kbit/s
[7] = 10 kbit/s

Dependency: Refer to: p8622

Note: The parameter is not influenced by setting the factory setting.

p8630[0...2] CAN virtual objects / Virtual objects

CU_S110-CAN

Can be changed: U, T	**Calculated:** -	**Access level:** 3
Data type: Unsigned16	**Dyn. index:** -	**Func. diagram:** -
P-Group: Communications	**Unit group:** -	**Unit selection:** -
Not for motor type: -	**Scaling:** -	**Expert list:** 1
Min	**Max**	**Factory setting**
0	65535	0

Description: Sets the drive object selection (index 0), the sub-index area (index 1) and the parameter area (index 2) when using virtual objects.

This means that it is possible to access all SINAMICS parameters via CAN.

Index 0 (drive object number):

0: Not possible to access virtual CANopen objects

1: Device

2 ... 65535: drive object number of drive 1 ... 8

Index 1 (sub-index area):

0: 0 ... 255

1: 256 ... 511

2: 512 ... 767

3: 768 ... 1023

Index 2 (parameter area):

0: 1 ... 9999

1: 10000 ... 19999

2: 20000 ... 29999

3: 30000 ... 39999

Index: [0] = Drive object number
[1] = Sub-index range
[2] = Parameter range

p8641 CAN Abort Connection Option Code / Abort con opt code

SERVO_S110-CAN

Can be changed: T	**Calculated:** -	**Access level:** 3
Data type: Integer16	**Dyn. index:** -	**Func. diagram:** -
P-Group: -	**Unit group:** -	**Unit selection:** -
Not for motor type: -	**Scaling:** -	**Expert list:** 1
Min	**Max**	**Factory setting**
0	3	3

Description: Sets the drive behavior if a CAN communication error occurs.

Value:
0: No response
1: OFF1
2: OFF2
3: OFF3

Dependency: Refer to: F08700

r8680[0...36] CAN Diagnosis Hardware / Diagnostics HW

CU_S110-CAN

Can be changed: -	**Calculated:** -	**Access level:** 3
Data type: Unsigned16	**Dyn. index:** -	**Func. diagram:** -
P-Group: Communications	**Unit group:** -	**Unit selection:** -
Not for motor type: -	**Scaling:** -	**Expert list:** 1
Min	**Max**	**Factory setting**
-	-	-

Description: Displays the register of the CAN controller C_CAN:

Register, Message Interface Register and Message Handler Register - referred to the CAN protocol.

Index:
[0] = Control register
[1] = Status register
[2] = Error counter
[3] = Bit timing register
[4] = Interrupt register
[5] = Test register
[6] = Baud rate prescaler extension register
[7] = Interface 1 command request register
[8] = Interface 1 command mask register
[9] = Interface 1 mask 1 register
[10] = Interface 1 mask 2 register
[11] = Interface 1 arbitration 1 register
[12] = Interface 1 arbitration 2 register
[13] = Interface 1 message control register
[14] = Interface 1 data A1 register
[15] = Interface 1 data A2 register
[16] = Interface 1 data B1 register
[17] = Interface 1 data B2 register
[18] = Interface 2 command request register
[19] = Interface 2 command mask register
[20] = Interface 2 mask 1 register
[21] = Interface 2 mask 2 register
[22] = Interface 2 arbitration 1 register
[23] = Interface 2 arbitration 2 register
[24] = Interface 2 message control register
[25] = Interface 2 data A1 register
[26] = Interface 2 data A2 register
[27] = Interface 2 data B1 register
[28] = Interface 2 data B2 register
[29] = Transmission request 1 register
[30] = Transmission request 2 register
[31] = New data 1 register
[32] = New data 2 register
[33] = Interrupt pending 1 register
[34] = Interrupt pending 2 register
[35] = Message valid 1 register
[36] = Message valid 2 register

Note: A description of the individual registers of the C_CAN controller can be taken from "C_CAN User's Manual".

p8684 CAN NMT state after booting / NMT state aft boot

CU_S110-CAN	**Can be changed:** T	**Calculated:** -	**Access level:** 3
	Data type: Integer16	**Dyn. index:** -	**Func. diagram:** -
	P-Group: -	**Unit group:** -	**Unit selection:** -
	Not for motor type: -	**Scaling:** -	**Expert list:** 1
	Min	**Max**	**Factory setting**
	4	127	127

Description: Sets the CANopen NMT state that is effective after booting.

Value:
4: Stopped
5: Operational
127: Pre-operational

Dependency: Refer to: p8685

Note: Booting in the NMT state pre-operational corresponds to the CANopen standard

p8685 CAN NMT states / NMT states

CU_S110-CAN	**Can be changed:** U, T	**Calculated:** -	**Access level:** 3
	Data type: Integer16	**Dyn. index:** -	**Func. diagram:** -
	P-Group: Communications	**Unit group:** -	**Unit selection:** -
	Not for motor type: -	**Scaling:** -	**Expert list:** 1
	Min	**Max**	**Factory setting**
	0	129	127

Description: Sets and displays the CANopen NMT state.

Value:
0: Initializing
4: Stopped
5: Operational
127: Pre-operational
128: Reset node
129: Reset Communication

Note: The value 0 (initialization) is only displayed and cannot be set.

p8699 CAN: RPDO monitoring time / RPDO t_monit

CU_S110-CAN	**Can be changed:** U, T	**Calculated:** -	**Access level:** 3
	Data type: FloatingPoint32	**Dyn. index:** -	**Func. diagram:** -
	P-Group: Communications	**Unit group:** -	**Unit selection:** -
	Not for motor type: -	**Scaling:** -	**Expert list:** 1
	Min	**Max**	**Factory setting**
	0 [ms]	65535000 [ms]	0 [ms]

Description: Sets the monitoring time to monitor the process data received via the CAN bus.
A value that is not a multiple integer of CANopen (p2048) is rounded-off.
If no process data is received within this time, fault F08702 is output.

Dependency: Refer to: p2048
Refer to: F08702

Note: 0: The monitoring is de-activated.

p8700[0...1] CAN Receive PDO 1 / Receive PDO 1

SERVO_S110-CAN	**Can be changed:** C1(3), T	**Calculated:** -	**Access level:** 3
	Data type: Unsigned32	**Dyn. index:** -	**Func. diagram:** 9204, 9206
	P-Group: Communications	**Unit group:** -	**Unit selection:** -
	Not for motor type: -	**Scaling:** -	**Expert list:** 1
	Min	**Max**	**Factory setting**
	0000 hex	8000 06DF hex	[0] 8000 06DF hex [1] 00FE hex

Description: Sets the communication parameters for CANopen Receive Process Data Object 1 (RPDO 1).

Index: [0] = PDO COB-ID
[1] = PDO transmission type

Dependency: A valid COB-ID can only be set for the available (existing) channel.
Refer to: p8741

Note: Corresponds to the CANopen object 1400 hex + 40 hex * x (x: Drive number 0 ... 7).
Transmission types 0, 1, FE and FF can be set.
PDO: Process Data Object

p8701[0...1] CAN Receive PDO 2 / Receive PDO 2

SERVO_S110-CAN	**Can be changed:** C1(3), T	**Calculated:** -	**Access level:** 3
	Data type: Unsigned32	**Dyn. index:** -	**Func. diagram:** 9204, 9206
	P-Group: Communications	**Unit group:** -	**Unit selection:** -
	Not for motor type: -	**Scaling:** -	**Expert list:** 1
	Min	**Max**	**Factory setting**
	0000 hex	8000 06DF hex	[0] 8000 06DF hex [1] 00FE hex

Description: Sets the communication parameters for CANopen Receive Process Data Object 2 (RPDO 2).

Index: [0] = PDO COB-ID
[1] = PDO transmission type

Dependency: A valid COB-ID can only be set for the available (existing) channel.
Refer to: p8741

Note: Corresponds to the CANopen object 1401 hex + 40 hex * x (x: Drive number 0 ... 7).
Transmission types 0, 1, FE and FF can be set.
PDO: Process Data Object

p8702[0...1] CAN Receive PDO 3 / Receive PDO 3

SERVO_S110-CAN	**Can be changed:** C1(3), T	**Calculated:** -	**Access level:** 3
	Data type: Unsigned32	**Dyn. index:** -	**Func. diagram:** 9204, 9206
	P-Group: Communications	**Unit group:** -	**Unit selection:** -
	Not for motor type: -	**Scaling:** -	**Expert list:** 1
	Min	**Max**	**Factory setting**
	0000 hex	8000 06DF hex	[0] 8000 06DF hex [1] 00FE hex

Description: Sets the communication parameters for CANopen Receive Process Data Object 3 (RPDO 3).

Index: [0] = PDO COB-ID
[1] = PDO transmission type

Dependency: A valid COB-ID can only be set for the available (existing) channel.
Refer to: p8741

Note: Corresponds to the CANopen object 1402 hex + 40 hex * x (x: Drive number 0 ... 7).
Transmission types 0, 1, FE and FF can be set.
PDO: Process Data Object

p8703[0...1] CAN Receive PDO 4 / Receive PDO 4

SERVO_S110-CAN	**Can be changed:** C1(3), T	**Calculated:** -	**Access level:** 3
	Data type: Unsigned32	**Dyn. index:** -	**Func. diagram:** 9204, 9206
	P-Group: Communications	**Unit group:** -	**Unit selection:** -
	Not for motor type: -	**Scaling:** -	**Expert list:** 1
	Min	**Max**	**Factory setting**
	0000 hex	8000 06DF hex	[0] 8000 06DF hex [1] 00FE hex

Description: Sets the communication parameters for CANopen Receive Process Data Object 4 (RPDO 4).

Index: [0] = PDO COB-ID
[1] = PDO transmission type

Dependency: A valid COB-ID can only be set for the available (existing) channel.
Refer to: p8741

Note: Corresponds to the CANopen object 1403 hex + 40 hex * x (x: Drive number 0 ... 7).
Transmission types 0, 1, FE and FF can be set.
PDO: Process Data Object

p8704[0...1] CAN Receive PDO 5 / Receive PDO 5

SERVO_S110-CAN	**Can be changed:** C1(3), T	**Calculated:** -	**Access level:** 3
	Data type: Unsigned32	**Dyn. index:** -	**Func. diagram:** 9204
	P-Group: Communications	**Unit group:** -	**Unit selection:** -
	Not for motor type: -	**Scaling:** -	**Expert list:** 1
	Min	**Max**	**Factory setting**
	0000 hex	8000 06DF hex	[0] 8000 06DF hex [1] 00FE hex

Description: Sets the communication parameters for CANopen Receive Process Data Object 5 (RPDO 5).

Index: [0] = PDO COB-ID
[1] = PDO transmission type

Dependency: A valid COB-ID can only be set for the available (existing) channel.
Refer to: p8741

Note: Corresponds to the CANopen object 1404 hex + 40 hex * x (x: Drive number 0 ... 7).
Transmission types 0, 1, FE and FF can be set.
PDO: Process Data Object

p8705[0...1] CAN Receive PDO 6 / Receive PDO 6

SERVO_S110-CAN	**Can be changed:** C1(3), T	**Calculated:** -	**Access level:** 3
	Data type: Unsigned32	**Dyn. index:** -	**Func. diagram:** 9204
	P-Group: Communications	**Unit group:** -	**Unit selection:** -
	Not for motor type: -	**Scaling:** -	**Expert list:** 1
	Min	**Max**	**Factory setting**
	0000 hex	8000 06DF hex	[0] 8000 06DF hex [1] 00FE hex

Description: Sets the communication parameters for CANopen Receive Process Data Object 6 (RPDO 6).

Index: [0] = PDO COB-ID
[1] = PDO transmission type

Dependency: A valid COB-ID can only be set for the available (existing) channel.
Refer to: p8741

Note: Corresponds to the CANopen object 1405 hex + 40 hex * x (x: Drive number 0 ... 7).
Transmission types 0, 1, FE and FF can be set.
PDO: Process Data Object

p8706[0...1] CAN Receive PDO 7 / Receive PDO 7

SERVO_S110-CAN	**Can be changed:** C1(3), T	**Calculated:** -	**Access level:** 3
	Data type: Unsigned32	**Dyn. index:** -	**Func. diagram:** 9204
	P-Group: Communications	**Unit group:** -	**Unit selection:** -
	Not for motor type: -	**Scaling:** -	**Expert list:** 1
	Min	**Max**	**Factory setting**
	0000 hex	8000 06DF hex	[0] 8000 06DF hex [1] 00FE hex

Description: Sets the communication parameters for CANopen Receive Process Data Object 7 (RPDO 7).

Index: [0] = PDO COB-ID
[1] = PDO transmission type

Dependency: A valid COB-ID can only be set for the available (existing) channel.
Refer to: p8741

Note: Corresponds to the CANopen object 1406 hex + 40 hex * x (x: Drive number 0 ... 7).
Transmission types 0, 1, FE and FF can be set.
PDO: Process Data Object

p8707[0...1] CAN Receive PDO 8 / Receive PDO 8

SERVO_S110-CAN	**Can be changed:** C1(3), T	**Calculated:** -	**Access level:** 3
	Data type: Unsigned32	**Dyn. index:** -	**Func. diagram:** 9204
	P-Group: Communications	**Unit group:** -	**Unit selection:** -
	Not for motor type: -	**Scaling:** -	**Expert list:** 1
	Min	**Max**	**Factory setting**
	0000 hex	8000 06DF hex	[0] 8000 06DF hex [1] 00FE hex

Description: Sets the communication parameters for CANopen Receive Process Data Object 8 (RPDO 8).

Index: [0] = PDO COB-ID
[1] = PDO transmission type

Dependency: A valid COB-ID can only be set for the available (existing) channel.
Refer to: p8741

Note: Corresponds to the CANopen object 1407 hex + 40 hex * x (x: Drive number 0 ... 7).
Transmission types 0, 1, FE and FF can be set.
PDO: Process Data Object

p8710[0...3] CAN Receive Mapping for RPDO 1 / Mapping RPDO 1

SERVO_S110-CAN	**Can be changed:** C1(3), T	**Calculated:** -	**Access level:** 3
	Data type: Unsigned32	**Dyn. index:** -	**Func. diagram:** 9204, 9206
	P-Group: Communications	**Unit group:** -	**Unit selection:** -
	Not for motor type: -	**Scaling:** -	**Expert list:** 1
	Min	**Max**	**Factory setting**
	0000 hex	FFFF FFFF hex	0000 hex

Description: Sets the mapping parameters for CANopen Receive Process Data Object 1 (RPDO 1).

Index: [0] = Mapped object 1
[1] = Mapped object 2
[2] = Mapped object 3
[3] = Mapped object 4

Note: Corresponds to the CANopen object 1600 hex + 40 hex * x (x: Drive number 0 ... 7).
Dummy mapping not supported.
The parameter can only be written online when the associated COB ID in p870x is set as invalid.

p8711[0...3] CAN Receive Mapping for RPDO 2 / Mapping RPDO 2

SERVO_S110-CAN	**Can be changed:** C1(3), T	**Calculated:** -	**Access level:** 3
	Data type: Unsigned32	**Dyn. index:** -	**Func. diagram:** 9204, 9206
	P-Group: Communications	**Unit group:** -	**Unit selection:** -
	Not for motor type: -	**Scaling:** -	**Expert list:** 1
	Min	**Max**	**Factory setting**
	0000 hex	FFFF FFFF hex	0000 hex

Description: Sets the mapping parameters for CANopen Receive Process Data Object 2 (RPDO 2).

Index: [0] = Mapped object 1
[1] = Mapped object 2
[2] = Mapped object 3
[3] = Mapped object 4

Note: Corresponds to the CANopen object 1601 hex + 40 hex * x (x: Drive number 0 ... 7).
Dummy mapping not supported.
The parameter can only be written online when the associated COB ID in p870x is set as invalid.

p8712[0...3] CAN Receive Mapping for RPDO 3 / Mapping RPDO 3

SERVO_S110-CAN	**Can be changed:** C1(3), T	**Calculated:** -	**Access level:** 3
	Data type: Unsigned32	**Dyn. index:** -	**Func. diagram:** 9204, 9206
	P-Group: Communications	**Unit group:** -	**Unit selection:** -
	Not for motor type: -	**Scaling:** -	**Expert list:** 1
	Min	**Max**	**Factory setting**
	0000 hex	FFFF FFFF hex	0000 hex

Description: Sets the mapping parameters for CANopen Receive Process Data Object 3 (RPDO 3).

Index: [0] = Mapped object 1
[1] = Mapped object 2
[2] = Mapped object 3
[3] = Mapped object 4

Note: Corresponds to the CANopen object 1602 hex + 40 hex * x (x: Drive number 0 ... 7).
Dummy mapping not supported.
The parameter can only be written online when the associated COB ID in p870x is set as invalid.

p8713[0...3] CAN Receive Mapping for RPDO 4 / Mapping RPDO 4

SERVO_S110-CAN	**Can be changed:** C1(3), T	**Calculated:** -	**Access level:** 3
	Data type: Unsigned32	**Dyn. index:** -	**Func. diagram:** 9204, 9206
	P-Group: Communications	**Unit group:** -	**Unit selection:** -
	Not for motor type: -	**Scaling:** -	**Expert list:** 1
	Min	**Max**	**Factory setting**
	0000 hex	FFFF FFFF hex	0000 hex

Description: Sets the mapping parameters for CANopen Receive Process Data Object 4 (RPDO 4).

Index: [0] = Mapped object 1
[1] = Mapped object 2
[2] = Mapped object 3
[3] = Mapped object 4

Note: Corresponds to the CANopen object 1603 hex + 40 hex * x (x: Drive number 0 ... 7).
Dummy mapping not supported.
The parameter can only be written online when the associated COB ID in p870x is set as invalid.

p8714[0...3] CAN Receive Mapping for RPDO 5 / Mapping RPDO 5

SERVO_S110-CAN	**Can be changed:** C1(3), T	**Calculated:** -	**Access level:** 3
	Data type: Unsigned32	**Dyn. index:** -	**Func. diagram:** 9204
	P-Group: Communications	**Unit group:** -	**Unit selection:** -
	Not for motor type: -	**Scaling:** -	**Expert list:** 1
	Min	**Max**	**Factory setting**
	0000 hex	FFFF FFFF hex	0000 hex

Description: Sets the mapping parameters for CANopen Receive Process Data Object 5 (RPDO 5).

Index: [0] = Mapped object 1
[1] = Mapped object 2
[2] = Mapped object 3
[3] = Mapped object 4

Note: Corresponds to the CANopen object 1604 hex + 40 hex * x (x: Drive number 0 ... 7).
Dummy mapping not supported.
The parameter can only be written online when the associated COB ID in p870x is set as invalid.

p8715[0...3] CAN Receive Mapping for RPDO 6 / Mapping RPDO 6

SERVO_S110-CAN	**Can be changed:** C1(3), T	**Calculated:** -	**Access level:** 3
	Data type: Unsigned32	**Dyn. index:** -	**Func. diagram:** 9204
	P-Group: Communications	**Unit group:** -	**Unit selection:** -
	Not for motor type: -	**Scaling:** -	**Expert list:** 1
	Min	**Max**	**Factory setting**
	0000 hex	FFFF FFFF hex	0000 hex

Description: Sets the mapping parameters for CANopen Receive Process Data Object 6 (RPDO 6).

Index:
[0] = Mapped object 1
[1] = Mapped object 2
[2] = Mapped object 3
[3] = Mapped object 4

Note:
Corresponds to the CANopen object 1605 hex + 40 hex * x (x: Drive number 0 ... 7).
Dummy mapping not supported.
The parameter can only be written online when the associated COB ID in p870x is set as invalid.

p8716[0...3] CAN Receive Mapping for RPDO 7 / Mapping RPDO 7

SERVO_S110-CAN	**Can be changed:** C1(3), T	**Calculated:** -	**Access level:** 3
	Data type: Unsigned32	**Dyn. index:** -	**Func. diagram:** 9204
	P-Group: Communications	**Unit group:** -	**Unit selection:** -
	Not for motor type: -	**Scaling:** -	**Expert list:** 1
	Min	**Max**	**Factory setting**
	0000 hex	FFFF FFFF hex	0000 hex

Description: Sets the mapping parameters for CANopen Receive Process Data Object 7 (RPDO 7).

Index:
[0] = Mapped object 1
[1] = Mapped object 2
[2] = Mapped object 3
[3] = Mapped object 4

Note:
Corresponds to the CANopen object 1606 hex + 40 hex * x (x: Drive number 0 ... 7).
Dummy mapping not supported.
The parameter can only be written online when the associated COB ID in p870x is set as invalid.

p8717[0...3] CAN Receive Mapping for RPDO 8 / Mapping RPDO 8

SERVO_S110-CAN	**Can be changed:** C1(3), T	**Calculated:** -	**Access level:** 3
	Data type: Unsigned32	**Dyn. index:** -	**Func. diagram:** 9204
	P-Group: Communications	**Unit group:** -	**Unit selection:** -
	Not for motor type: -	**Scaling:** -	**Expert list:** 1
	Min	**Max**	**Factory setting**
	0000 hex	FFFF FFFF hex	0000 hex

Description: Sets the mapping parameters for CANopen Receive Process Data Object 8 (RPDO 8).

Index:
[0] = Mapped object 1
[1] = Mapped object 2
[2] = Mapped object 3
[3] = Mapped object 4

Note:
Corresponds to the CANopen object 1607 hex + 40 hex * x (x: Drive number 0 ... 7).
Dummy mapping not supported.
The parameter can only be written online when the associated COB ID in p870x is set as invalid.

p8720[0...4] CAN Transmit PDO 1 / Transmit PDO 1

SERVO_S110-CAN	**Can be changed:** C1(3), T	**Calculated:** -	**Access level:** 3
	Data type: Unsigned32	**Dyn. index:** -	**Func. diagram:** 9208, 9210
	P-Group: Communications	**Unit group:** -	**Unit selection:** -
	Not for motor type: -	**Scaling:** -	**Expert list:** 1
	Min	**Max**	**Factory setting**
	0000 hex	C000 06DF hex	[0] C000 06DF hex
			[1] 00FE hex
			[2] 0000 hex
			[3] 0000 hex
			[4] 0000 hex

Description: Sets the communication parameters for CANopen Transmit Process Data Object 1 (TPDO 1).

Index:
[0] = PDO COB-ID
[1] = PDO transmission type
[2] = Inhibit time (in 100 µs)
[3] = Reserved
[4] = Event timer (in ms)

Dependency: A valid COB-ID can only be set for the available (existing) channel.
Refer to: p8741

Notice: For inhibit time and event timer, the following apply:
A value that is not a multiple integer of CANopen (4 ms) is rounded-off.

Note: Corresponds to the CANopen object 1800 hex + 40 hex * x (x: Drive number 0 ... 7).
Transmission types 0, 1 ... F0, FE and FF can be set.
PDO: Process Data Object

p8721[0...4] CAN Transmit PDO 2 / Transmit PDO 2

SERVO_S110-CAN	**Can be changed:** C1(3), T	**Calculated:** -	**Access level:** 3
	Data type: Unsigned32	**Dyn. index:** -	**Func. diagram:** 9208, 9210
	P-Group: Communications	**Unit group:** -	**Unit selection:** -
	Not for motor type: -	**Scaling:** -	**Expert list:** 1
	Min	**Max**	**Factory setting**
	0000 hex	C000 06DF hex	[0] C000 06DF hex
			[1] 00FE hex
			[2] 0000 hex
			[3] 0000 hex
			[4] 0000 hex

Description: Sets the communication parameters for CANopen Transmit Process Data Object 2 (TPDO 2).

Index:
[0] = PDO COB-ID
[1] = PDO transmission type
[2] = Inhibit time (in 100 µs)
[3] = Reserved
[4] = Event timer (in ms)

Dependency: A valid COB-ID can only be set for the available (existing) channel.
Refer to: p8741

Notice: For inhibit time and event timer, the following apply:
A value that is not a multiple integer of CANopen (4 ms) is rounded-off.

Note: Corresponds to the CANopen object 1801 hex + 40 hex * x (x: Drive number 0 ... 7).
Transmission types 0, 1 ... F0, FE and FF can be set.
PDO: Process Data Object

p8722[0...4] CAN Transmit PDO 3 / Transmit PDO 3

SERVO_S110-CAN	**Can be changed:** C1(3), T	**Calculated:** -	**Access level:** 3
	Data type: Unsigned32	**Dyn. index:** -	**Func. diagram:** 9208, 9210
	P-Group: Communications	**Unit group:** -	**Unit selection:** -
	Not for motor type: -	**Scaling:** -	**Expert list:** 1
	Min	**Max**	**Factory setting**
	0000 hex	C000 06DF hex	[0] C000 06DF hex
			[1] 00FE hex
			[2] 0000 hex
			[3] 0000 hex
			[4] 0000 hex

Description: Sets the communication parameters for CANopen Transmit Process Data Object 3 (TPDO 3).

Index: [0] = PDO COB-ID
[1] = PDO transmission type
[2] = Inhibit time (in 100 µs)
[3] = Reserved
[4] = Event timer (in ms)

Dependency: A valid COB-ID can only be set for the available (existing) channel.
Refer to: p8741

Notice: For inhibit time and event timer, the following apply:
A value that is not a multiple integer of CANopen (4 ms) is rounded-off.

Note: Corresponds to the CANopen object 1802 hex + 40 hex * x (x: Drive number 0 ... 7).
Transmission types 0, 1 ... F0, FE and FF can be set.
PDO: Process Data Object

p8723[0...4] CAN Transmit PDO 4 / Transmit PDO 4

SERVO_S110-CAN	**Can be changed:** C1(3), T	**Calculated:** -	**Access level:** 3
	Data type: Unsigned32	**Dyn. index:** -	**Func. diagram:** 9208, 9210
	P-Group: Communications	**Unit group:** -	**Unit selection:** -
	Not for motor type: -	**Scaling:** -	**Expert list:** 1
	Min	**Max**	**Factory setting**
	0000 hex	C000 06DF hex	[0] C000 06DF hex
			[1] 00FE hex
			[2] 0000 hex
			[3] 0000 hex
			[4] 0000 hex

Description: Sets the communication parameters for CANopen Transmit Process Data Object 4 (TPDO 4).

Index: [0] = PDO COB-ID
[1] = PDO transmission type
[2] = Inhibit time (in 100 µs)
[3] = Reserved
[4] = Event timer (in ms)

Dependency: A valid COB-ID can only be set for the available (existing) channel.
Refer to: p8741

Notice: For inhibit time and event timer, the following apply:
A value that is not a multiple integer of CANopen (4 ms) is rounded-off.

Note: Corresponds to the CANopen object 1803 hex + 40 hex * x (x: Drive number 0 ... 7).
Transmission types 0, 1 ... F0, FE and FF can be set.
PDO: Process Data Object

p8724[0...4] CAN Transmit PDO 5 / Transmit PDO 5

SERVO_S110-CAN	**Can be changed:** C1(3), T	**Calculated:** -	**Access level:** 3
	Data type: Unsigned32	**Dyn. index:** -	**Func. diagram:** 9208
	P-Group: Communications	**Unit group:** -	**Unit selection:** -
	Not for motor type: -	**Scaling:** -	**Expert list:** 1
	Min	**Max**	**Factory setting**
	0000 hex	C000 06DF hex	[0] C000 06DF hex
			[1] 00FE hex
			[2] 0000 hex
			[3] 0000 hex
			[4] 0000 hex

Description: Sets the communication parameters for CANopen Transmit Process Data Object 5 (TPDO 5).

Index:
[0] = PDO COB-ID
[1] = PDO transmission type
[2] = Inhibit time (in 100 µs)
[3] = Reserved
[4] = Event timer (in ms)

Dependency: A valid COB-ID can only be set for the available (existing) channel.
Refer to: p8741

Notice: For inhibit time and event timer, the following apply:
A value that is not a multiple integer of CANopen (4 ms) is rounded-off.

Note: Corresponds to the CANopen object 1804 hex + 40 hex * x (x: Drive number 0 ... 7).
Transmission types 0, 1 ... F0, FE and FF can be set.
PDO: Process Data Object

p8725[0...4] CAN Transmit PDO 6 / Transmit PDO 6

SERVO_S110-CAN	**Can be changed:** C1(3), T	**Calculated:** -	**Access level:** 3
	Data type: Unsigned32	**Dyn. index:** -	**Func. diagram:** 9208
	P-Group: Communications	**Unit group:** -	**Unit selection:** -
	Not for motor type: -	**Scaling:** -	**Expert list:** 1
	Min	**Max**	**Factory setting**
	0000 hex	C000 06DF hex	[0] C000 06DF hex
			[1] 00FE hex
			[2] 0000 hex
			[3] 0000 hex
			[4] 0000 hex

Description: Sets the communication parameters for CANopen Transmit Process Data Object 6 (TPDO 6).

Index:
[0] = PDO COB-ID
[1] = PDO transmission type
[2] = Inhibit time (in 100 µs)
[3] = Reserved
[4] = Event timer (in ms)

Dependency: A valid COB-ID can only be set for the available (existing) channel.
Refer to: p8741

Notice: For inhibit time and event timer, the following apply:
A value that is not a multiple integer of CANopen (4 ms) is rounded-off.

Note: Corresponds to the CANopen object 1805 hex + 40 hex * x (x: Drive number 0 ... 7).
Transmission types 0, 1 ... F0, FE and FF can be set.
PDO: Process Data Object

p8726[0...4] CAN Transmit PDO 7 / Transmit PDO 7

SERVO_S110-CAN	**Can be changed:** C1(3), T	**Calculated:** -	**Access level:** 3
	Data type: Unsigned32	**Dyn. index:** -	**Func. diagram:** 9208
	P-Group: Communications	**Unit group:** -	**Unit selection:** -
	Not for motor type: -	**Scaling:** -	**Expert list:** 1
	Min	**Max**	**Factory setting**
	0000 hex	C000 06DF hex	[0] C000 06DF hex
			[1] 00FE hex
			[2] 0000 hex
			[3] 0000 hex
			[4] 0000 hex

Description: Sets the communication parameters for CANopen Transmit Process Data Object 7 (TPDO 7).

Index:
[0] = PDO COB-ID
[1] = PDO transmission type
[2] = Inhibit time (in 100 µs)
[3] = Reserved
[4] = Event timer (in ms)

Dependency: A valid COB-ID can only be set for the available (existing) channel.
Refer to: p8741

Notice: For inhibit time and event timer, the following apply:
A value that is not a multiple integer of CANopen (4 ms) is rounded-off.

Note: Corresponds to the CANopen object 1806 hex + 40 hex * x (x: Drive number 0 ... 7).
Transmission types 0, 1 ... F0, FE and FF can be set.
PDO: Process Data Object

p8727[0...4] CAN Transmit PDO 8 / Transmit PDO 8

SERVO_S110-CAN	**Can be changed:** C1(3), T	**Calculated:** -	**Access level:** 3
	Data type: Unsigned32	**Dyn. index:** -	**Func. diagram:** 9208
	P-Group: Communications	**Unit group:** -	**Unit selection:** -
	Not for motor type: -	**Scaling:** -	**Expert list:** 1
	Min	**Max**	**Factory setting**
	0000 hex	C000 06DF hex	[0] C000 06DF hex
			[1] 00FE hex
			[2] 0000 hex
			[3] 0000 hex
			[4] 0000 hex

Description: Sets the communication parameters for CANopen Transmit Process Data Object 8 (TPDO 8).

Index:
[0] = PDO COB-ID
[1] = PDO transmission type
[2] = Inhibit time (in 100 µs)
[3] = Reserved
[4] = Event timer (in ms)

Dependency: A valid COB-ID can only be set for the available (existing) channel.
Refer to: p8741

Notice: For inhibit time and event timer, the following apply:
A value that is not a multiple integer of CANopen (4 ms) is rounded-off.

Note: Corresponds to the CANopen object 1807 hex + 40 hex * x (x: Drive number 0 ... 7).
Transmission types 0, 1 ... F0, FE and FF can be set.
PDO: Process Data Object

p8730[0...3] CAN Transmit Mapping for TPDO 1 / Mapping TPDO 1

SERVO_S110-CAN

Can be changed: C1(3), T	**Calculated:** -	**Access level:** 3
Data type: Unsigned32	**Dyn. index:** -	**Func. diagram:** 9208, 9210
P-Group: Communications	**Unit group:** -	**Unit selection:** -
Not for motor type: -	**Scaling:** -	**Expert list:** 1
Min	**Max**	**Factory setting**
0000 hex	FFFF FFFF hex	0000 hex

Description: Sets the mapping parameters for CANopen Transmit Process Data Object 1 (TPDO 1).

Index: [0] = Mapped object 1
[1] = Mapped object 2
[2] = Mapped object 3
[3] = Mapped object 4

Note: Corresponds to the CANopen object 1A00 hex + 40 hex * x (x: Drive number 0 ... 7).
The parameter can only be written online when the associated COB ID in p872x is set as invalid.

p8731[0...3] CAN Transmit Mapping for TPDO 2 / Mapping TPDO 2

SERVO_S110-CAN

Can be changed: C1(3), T	**Calculated:** -	**Access level:** 3
Data type: Unsigned32	**Dyn. index:** -	**Func. diagram:** 9208, 9210
P-Group: Communications	**Unit group:** -	**Unit selection:** -
Not for motor type: -	**Scaling:** -	**Expert list:** 1
Min	**Max**	**Factory setting**
0000 hex	FFFF FFFF hex	0000 hex

Description: Sets the mapping parameters for CANopen Transmit Process Data Object 2 (TPDO 2).

Index: [0] = Mapped object 1
[1] = Mapped object 2
[2] = Mapped object 3
[3] = Mapped object 4

Note: Corresponds to the CANopen object 1A01 hex + 40 hex * x (x: Drive number 0 ... 7).
The parameter can only be written online when the associated COB ID in p872x is set as invalid.

p8732[0...3] CAN Transmit Mapping for TPDO 3 / Mapping TPDO 3

SERVO_S110-CAN

Can be changed: C1(3), T	**Calculated:** -	**Access level:** 3
Data type: Unsigned32	**Dyn. index:** -	**Func. diagram:** 9208, 9210
P-Group: Communications	**Unit group:** -	**Unit selection:** -
Not for motor type: -	**Scaling:** -	**Expert list:** 1
Min	**Max**	**Factory setting**
0000 hex	FFFF FFFF hex	0000 hex

Description: Sets the mapping parameters for CANopen Transmit Process Data Object 3 (TPDO 3).

Index: [0] = Mapped object 1
[1] = Mapped object 2
[2] = Mapped object 3
[3] = Mapped object 4

Note: Corresponds to the CANopen object 1A02 hex + 40 hex * x (x: Drive number 0 ... 7).
The parameter can only be written online when the associated COB ID in p872x is set as invalid.

p8733[0...3] CAN Transmit Mapping for TPDO 4 / Mapping TPDO 4

SERVO_S110-CAN

Can be changed: C1(3), T	**Calculated:** -	**Access level:** 3
Data type: Unsigned32	**Dyn. index:** -	**Func. diagram:** 9208, 9210
P-Group: Communications	**Unit group:** -	**Unit selection:** -
Not for motor type: -	**Scaling:** -	**Expert list:** 1
Min	**Max**	**Factory setting**
0000 hex	FFFF FFFF hex	0000 hex

Description: Sets the mapping parameters for CANopen Transmit Process Data Object 4 (TPDO 4).

Index: [0] = Mapped object 1
[1] = Mapped object 2
[2] = Mapped object 3
[3] = Mapped object 4

Note: Corresponds to the CANopen object 1A03 hex + 40 hex * x (x: Drive number 0 ... 7).
The parameter can only be written online when the associated COB ID in p872x is set as invalid.

p8734[0...3] CAN Transmit Mapping for TPDO 5 / Mapping TPDO 5

SERVO_S110-CAN

Can be changed: C1(3), T	**Calculated:** -	**Access level:** 3
Data type: Unsigned32	**Dyn. index:** -	**Func. diagram:** 9208
P-Group: Communications	**Unit group:** -	**Unit selection:** -
Not for motor type: -	**Scaling:** -	**Expert list:** 1
Min	**Max**	**Factory setting**
0000 hex	FFFF FFFF hex	0000 hex

Description: Sets the mapping parameters for CANopen Transmit Process Data Object 5 (TPDO 5).

Index: [0] = Mapped object 1
[1] = Mapped object 2
[2] = Mapped object 3
[3] = Mapped object 4

Note: Corresponds to the CANopen object 1A04 hex + 40 hex * x (x: Drive number 0 ... 7).
The parameter can only be written online when the associated COB ID in p872x is set as invalid.

p8735[0...3] CAN Transmit Mapping for TPDO 6 / Mapping TPDO 6

SERVO_S110-CAN

Can be changed: C1(3), T	**Calculated:** -	**Access level:** 3
Data type: Unsigned32	**Dyn. index:** -	**Func. diagram:** 9208
P-Group: Communications	**Unit group:** -	**Unit selection:** -
Not for motor type: -	**Scaling:** -	**Expert list:** 1
Min	**Max**	**Factory setting**
0000 hex	FFFF FFFF hex	0000 hex

Description: Sets the mapping parameters for CANopen Transmit Process Data Object 6 (TPDO 6).

Index: [0] = Mapped object 1
[1] = Mapped object 2
[2] = Mapped object 3
[3] = Mapped object 4

Note: Corresponds to the CANopen object 1A05 hex + 40 hex * x (x: Drive number 0 ... 7).
The parameter can only be written online when the associated COB ID in p872x is set as invalid.

p8736[0...3] CAN Transmit Mapping for TPDO 7 / Mapping TPDO 7

SERVO_S110-CAN

Can be changed: C1(3), T	**Calculated:** -	**Access level:** 3
Data type: Unsigned32	**Dyn. index:** -	**Func. diagram:** 9208
P-Group: Communications	**Unit group:** -	**Unit selection:** -
Not for motor type: -	**Scaling:** -	**Expert list:** 1
Min	**Max**	**Factory setting**
0000 hex	FFFF FFFF hex	0000 hex

Description: Sets the mapping parameters for CANopen Transmit Process Data Object 7 (TPDO 7).

Index: [0] = Mapped object 1
[1] = Mapped object 2
[2] = Mapped object 3
[3] = Mapped object 4

Note: Corresponds to the CANopen object 1A06 hex + 40 hex * x (x: Drive number 0 ... 7).
The parameter can only be written online when the associated COB ID in p872x is set as invalid.

p8737[0...3] CAN Transmit Mapping for TPDO 8 / Mapping TPDO 8

SERVO_S110-CAN

Can be changed: C1(3), T	**Calculated:** -	**Access level:** 3
Data type: Unsigned32	**Dyn. index:** -	**Func. diagram:** 9208
P-Group: Communications	**Unit group:** -	**Unit selection:** -
Not for motor type: -	**Scaling:** -	**Expert list:** 1
Min	**Max**	**Factory setting**
0000 hex	FFFF FFFF hex	0000 hex

Description: Sets the mapping parameters for CANopen Transmit Process Data Object 8 (TPDO 8).

Index:
[0] = Mapped object 1
[1] = Mapped object 2
[2] = Mapped object 3
[3] = Mapped object 4

Note: Corresponds to the CANopen object 1A07 hex + 40 hex * x (x: Drive number 0 ... 7).
The parameter can only be written online when the associated COB ID in p872x is set as invalid.

p8741 CAN PDO configuration acknowledgement / PDO config ackn

CU_S110-CAN

Can be changed: T	**Calculated:** -	**Access level:** 3
Data type: Integer16	**Dyn. index:** -	**Func. diagram:** -
P-Group: -	**Unit group:** -	**Unit selection:** -
Not for motor type: -	**Scaling:** -	**Expert list:** 1
Min	**Max**	**Factory setting**
0	1	0

Description: Acknowledges the setting of the Predefined Connection Sets (p8744).

Value:
0: Inactive
1: Acknowledge configuration

Dependency: Refer to: p8744

r8743[0...7] CAN assignment drive/drive ID / Drive ID

CU_S110-CAN

Can be changed: -	**Calculated:** -	**Access level:** 3
Data type: Unsigned16	**Dyn. index:** -	**Func. diagram:** -
P-Group: -	**Unit group:** -	**Unit selection:** -
Not for motor type: -	**Scaling:** -	**Expert list:** 1
Min	**Max**	**Factory setting**
-	-	-

Description: Displays the drive ID associated with each drive.

Index:
[0] = Drive ID for 1st drive
[1] = Drive ID for 2nd drive
[2] = Drive ID for 3rd drive
[3] = Drive ID for 4th drive
[4] = Drive ID for 5th drive
[5] = Drive ID for 6th drive
[6] = Drive ID for 7th drive
[7] = Drive ID for 8th drive

p8744 CAN PDO mapping configuration / PDO Mapping config

SERVO_S110-CAN

Can be changed: C2, T	**Calculated:** -	**Access level:** 2
Data type: Integer16	**Dyn. index:** -	**Func. diagram:** 9204, 9206, 9208, 9210
P-Group: -	**Unit group:** -	**Unit selection:** -
Not for motor type: -	**Scaling:** -	**Expert list:** 1
Min	**Max**	**Factory setting**
1	2	2

Description: Selector switch for the PDO mapping.
Sets the mapping for download or in the online mode after acknowledging with p8741.

Value:
1: Predefined Connection Set
2: Free PDO Mapping

r8750[0...15] CAN mapped 16-bit receive objects / RPDO 16 mapped

SERVO_S110-CAN

Can be changed: -	**Calculated:** -	**Access level:** 3
Data type: Unsigned16	**Dyn. index:** -	**Func. diagram:** -
P-Group: Communications	**Unit group:** -	**Unit selection:** -
Not for motor type: -	**Scaling:** -	**Expert list:** 1
Min	**Max**	**Factory setting**
-	-	-

Description: Displays the mapped 16-bit receive CANopen objects in the process data buffer.
Example:
If, e.g. the control word is mapped in an RPDO, then r8750 indicates the position of the control word in the process data buffer.

Index:
[0] = PZD 1
[1] = PZD 2
[2] = PZD 3
[3] = PZD 4
[4] = PZD 5
[5] = PZD 6
[6] = PZD 7
[7] = PZD 8
[8] = PZD 9
[9] = PZD 10
[10] = PZD 11
[11] = PZD 12
[12] = PZD 13
[13] = PZD 14
[14] = PZD 15
[15] = PZD 16

r8751[0...15] CAN mapped 16-bit transmit objects / TPDO 16 mapped

SERVO_S110-CAN

Can be changed: -	**Calculated:** -	**Access level:** 3
Data type: Unsigned16	**Dyn. index:** -	**Func. diagram:** -
P-Group: Communications	**Unit group:** -	**Unit selection:** -
Not for motor type: -	**Scaling:** -	**Expert list:** 1
Min	**Max**	**Factory setting**
-	-	-

Description: Displays mapped 16-bit transmit CANopen objects in the process data buffer.

Index:
[0] = PZD 1
[1] = PZD 2
[2] = PZD 3
[3] = PZD 4
[4] = PZD 5
[5] = PZD 6
[6] = PZD 7
[7] = PZD 8
[8] = PZD 9
[9] = PZD 10
[10] = PZD 11
[11] = PZD 12
[12] = PZD 13
[13] = PZD 14
[14] = PZD 15
[15] = PZD 16

Dependency: Refer to: r8750

r8760[0...14] CAN mapped 32-bit receive objects / RPDO 32 mapped

SERVO_S110-CAN

Can be changed: -	**Calculated:** -	**Access level:** 3
Data type: Unsigned16	**Dyn. index:** -	**Func. diagram:** -
P-Group: Communications	**Unit group:** -	**Unit selection:** -
Not for motor type: -	**Scaling:** -	**Expert list:** 1
Min	**Max**	**Factory setting**
-	-	-

Description: Displays the mapped 32-bit receive CANopen objects in the process data buffer.

Index:
[0] = PZD 1 + 2
[1] = PZD 2 + 3
[2] = PZD 3 + 4
[3] = PZD 4 + 5
[4] = PZD 5 + 6
[5] = PZD 6 + 7
[6] = PZD 7 + 8
[7] = PZD 8 + 9
[8] = PZD 9 + 10
[9] = PZD 10 + 11
[10] = PZD 11 + 12
[11] = PZD 12 + 13
[12] = PZD 13 + 14
[13] = PZD 14 + 15
[14] = PZD 15 + 16

r8761[0...14] CAN mapped 32-bit transmit objects / TPDO 32 mapped

SERVO_S110-CAN

Can be changed: -	**Calculated:** -	**Access level:** 3
Data type: Unsigned16	**Dyn. index:** -	**Func. diagram:** -
P-Group: Communications	**Unit group:** -	**Unit selection:** -
Not for motor type: -	**Scaling:** -	**Expert list:** 1
Min	**Max**	**Factory setting**
-	-	-

Description: Displays mapped 32-bit transmit CANopen objects in the process data buffer.

Index:
[0] = PZD 1 + 2
[1] = PZD 2 + 3
[2] = PZD 3 + 4
[3] = PZD 4 + 5
[4] = PZD 5 + 6
[5] = PZD 6 + 7
[6] = PZD 7 + 8
[7] = PZD 8 + 9
[8] = PZD 9 + 10
[9] = PZD 10 + 11
[10] = PZD 11 + 12
[11] = PZD 12 + 13
[12] = PZD 13 + 14
[13] = PZD 14 + 15
[14] = PZD 15 + 16

r8784 CO: CAN status word / Status word

SERVO_S110-CAN

Can be changed: -	**Calculated:** -	**Access level:** 3
Data type: Unsigned16	**Dyn. index:** -	**Func. diagram:** 8010
P-Group: Communications	**Unit group:** -	**Unit selection:** -
Not for motor type: -	**Scaling:** -	**Expert list:** 1
Min	**Max**	**Factory setting**
-	-	-

Description: Displays the CANopen status word.

Bit field:	Bit	Signal name	1 signal	0 signal	FP
	00	Ready for switching on	Yes	No	-
	01	Ready	Yes	No	-
	02	Operation enabled	Yes	No	-
	03	Fault present	Yes	No	-
	04	No coasting active	Yes	No	-
	05	No Quick Stop active	Yes	No	-
	06	Switching on inhibited active	Yes	No	-
	07	Alarm present	Yes	No	-
	08	Can be freely interconnected (BI: p8785)	High	Low	-
	09	Control request	Yes	No	-
	10	Target reached	Yes	No	-
	11	Torque limit reached	Yes	No	-
	12	Velocity equal to zero	Yes	No	-
	14	Can be freely interconnected (BI: p8786)	High	Low	-
	15	Can be freely interconnected (BI: p8787)	High	Low	-

Note: Corresponds to the CANopen object 6041 hex + 800 hex * x (x: Drive number 0 ... 7).

Re bit 10:

When the ramp-function generator is activated, the interconnection from CI: p2151 = r1119 can be changed, so that to evaluate bit 10, the setpoint can be retrieved (taken) from in front of the ramp-function generator.

Re bit 10, 12:

When braking, the two bits must indicate the same state. This is the reason that the following parameters must be set the same:

p2161 (speed threshold value 3, for r2199.0) = p2163 (speed threshold value 4, for r2197.7)

p2150 (hysteresis speed 3, for r2199.0) = p2164 (hysteresis speed 4, for r2197.7)

p8785 BI: CAN status word bit 8 / Status word bit 8

SERVO_S110-CAN

Can be changed: T	**Calculated:** -	**Access level:** 3
Data type: Unsigned32 / Binary	**Dyn. index:** -	**Func. diagram:** -
P-Group: Communications	**Unit group:** -	**Unit selection:** -
Not for motor type: -	**Scaling:** -	**Expert list:** 1
Min	**Max**	**Factory setting**
-	-	0

Description: Binector input for CANopen status word bit 8.

Dependency: Refer to: r8784

p8786 BI: CAN status word bit 14 / Status word bit 14

SERVO_S110-CAN

Can be changed: T	**Calculated:** -	**Access level:** 3
Data type: Unsigned32 / Binary	**Dyn. index:** -	**Func. diagram:** -
P-Group: Communications	**Unit group:** -	**Unit selection:** -
Not for motor type: -	**Scaling:** -	**Expert list:** 1
Min	**Max**	**Factory setting**
-	-	0

Description: Binector input for CANopen status word bit 14.

Dependency: Refer to: r8784

p8787 BI: CAN status word bit 15 / Status word bit 15

SERVO_S110-CAN

Can be changed: T	**Calculated:** -	**Access level:** 3
Data type: Unsigned32 / Binary	**Dyn. index:** -	**Func. diagram:** -
P-Group: Communications	**Unit group:** -	**Unit selection:** -
Not for motor type: -	**Scaling:** -	**Expert list:** 1
Min	**Max**	**Factory setting**
-	-	0

Description: Binector input for CANopen status word bit 15.

Dependency: Refer to: r8784

p8790 CAN control word - auto interconnection / STW interc auto

SERVO_S110-CAN

Can be changed: C1(3), T | **Calculated:** - | **Access level:** 3
Data type: Integer16 | **Dyn. index:** - | **Func. diagram:** -
P-Group: Communications | **Unit group:** - | **Unit selection:** -
Not for motor type: - | **Scaling:** - | **Expert list:** 1

Min	Max	Factory setting
0	1	0

Description: Sets the automatic BICO interconnection of the CANopen control word.

Value:
0: No interconn
1: Interconnection

Dependency: Refer to: r2050, r2090, r2091, r2092, r2093, r8750, r8795

Note: The following BICO interconnections are automatically established if the CANopen control word is mapped at one of the locations x = 0 ... 3 in the receive process data buffer.

For SINAMICS S120 with CBC10, the PZD interface IF2 is used:

BI: p0840.0 = r889x.0

BI: p0844.0 = r889x.1

BI: p0848.0 = r889x.2

BI: p0852.0 = r889x.3

BI: p2103.0 = r889x.7

For SINAMICS S110, the PZD interface IF1 is used:

BI: p0840.0 = r209x.0

BI: p0844.0 = r209x.1

BI: p0848.0 = r209x.2

BI: p0852.0 = r209x.3

BI: p2103.0 = r209x.7

The write access is rejected if a CANopen control word is not mapped at one of these locations.

This also causes the project download of the commissioning software to be canceled.

r8795 CAN control word / Control word

SERVO_S110-CAN

Can be changed: - | **Calculated:** - | **Access level:** 3
Data type: Unsigned16 | **Dyn. index:** - | **Func. diagram:** -
P-Group: - | **Unit group:** - | **Unit selection:** -
Not for motor type: - | **Scaling:** - | **Expert list:** 1

Min	Max	Factory setting
-	-	-

Description: Access to the CANopen control word using SDO transfer.

Bit field:

Bit	Signal name	1 signal	0 signal	FP
00	ON/OFF1	Yes	No	-
01	Do not activate coast down	Yes	No	-
02	Do not activate a Quick Stop	Yes	No	-
03	Operation enable	Yes	No	-
07	Acknowledge fault	Yes	No	-
11	Freely interconn	High	Low	-
12	Freely interconn	High	Low	-
13	Freely interconn	High	Low	-
14	Freely interconn	High	Low	-
15	Freely interconn	High	Low	-

Dependency: Refer to: p8790

Note: Corresponds to the CANopen object 6040 hex + 800 hex * x (x: Drive number 0 ... 7).

r8796 CAN Target Velocity / Target velocity

SERVO_S110-CAN	**Can be changed:** -	**Calculated:** -	**Access level:** 3
	Data type: Integer32	**Dyn. index:** -	**Func. diagram:** -
	P-Group: -	**Unit group:** -	**Unit selection:** -
	Not for motor type: -	**Scaling:** -	**Expert list:** 1
	Min	**Max**	**Factory setting**
	-	-	-

Description: Access to the CANopen object target velocity using the SDO transfer.
The value is displayed in increments/second as standard.

Note: Corresponds to the CANopen object 60FF hex + 800 hex * x (x: Drive number 0 ... 7).
The displayed value is calculated as follows:
r8796 = n_set [RPM] / 60 s * p0408 * 2^p0418 * p8798[1] / p8798[0]

r8797 CAN Target Torque / Target torque

SERVO_S110-CAN	**Can be changed:** -	**Calculated:** -	**Access level:** 3
	Data type: Integer16	**Dyn. index:** -	**Func. diagram:** -
	P-Group: -	**Unit group:** -	**Unit selection:** -
	Not for motor type: -	**Scaling:** -	**Expert list:** 1
	Min	**Max**	**Factory setting**
	-	-	-

Description: Access to the CANopen object target torque using SDO transfer.
The value is displayed as per mille (1/1000) as standard.

Note: Corresponds to the CANopen object 6071 hex + 800 hex * x (x: Drive number 0 ... 7).
The displayed value is calculated as follows:
r8797 [per mille] = M_set [Nm] / p0333 [Nm] * 1000

p8798[0...1] CAN speed conversion factor / n_conv_factor

SERVO_S110-CAN	**Can be changed:** T	**Calculated:** -	**Access level:** 3
	Data type: Unsigned32	**Dyn. index:** -	**Func. diagram:** -
	P-Group: -	**Unit group:** -	**Unit selection:** -
	Not for motor type: -	**Scaling:** -	**Expert list:** 1
	Min	**Max**	**Factory setting**
	1	4294967295	1

Description: The factor converts the required velocity units into the internal velocity units (U/s).
With the factory setting, for CANopen, the velocity units are increments/second.
The parameter corresponds to the CANopen object 6094 hex.
The internal velocity is calculated as follows:
n_set_internal = object 6094.1 / object 6094.2 * 1/(p0408 * 2^p0418) * n_set_bus

Index: [0] = Counter
[1] = Denominator

r8909 PN device ID / PN device ID

CU_S110-PN	**Can be changed:** -	**Calculated:** -	**Access level:** 3
	Data type: Unsigned16	**Dyn. index:** -	**Func. diagram:** -
	P-Group: -	**Unit group:** -	**Unit selection:** -
	Not for motor type: -	**Scaling:** -	**Expert list:** 1
	Min	**Max**	**Factory setting**
	-	-	-

Description: Displays the PROFINET Device ID. Every SINAMICS device type has its own PROFINET Device ID and its own PROFINET GSD.

Note: List of the SINAMICS Device IDs:
0501 hex: S120/S150
0504 hex: G130/G150
0505 hex: GM150
0509 hex: GL150
050A hex: DC MASTER
050B hex: SL150
050C hex: SM120
050E hex: S110

p8920[0...239] PN Name of Station / PN Name Stat

CU_S110-PN	**Can be changed:** U, T	**Calculated:** -	**Access level:** 3
	Data type: Unsigned8	**Dyn. index:** -	**Func. diagram:** -
	P-Group: -	**Unit group:** -	**Unit selection:** -
	Not for motor type: -	**Scaling:** -	**Expert list:** 1
	Min	**Max**	**Factory setting**
	-	-	-

Description: Sets the station name for the onboard PROFINET interface on the Control Unit.
The active station name is displayed in r8930.

Note: An ASCII table (excerpt) can be found, for example, in the appendix to the List Manual.
The interface configuration (p8920 and following) is activated with p8925 = 1.
The parameter is not influenced by setting the factory setting.
PN: PROFINET

p8921[0...3] PN IP address of station / PN IP of stat

CU_S110-PN	**Can be changed:** U, T	**Calculated:** -	**Access level:** 3
	Data type: Unsigned8	**Dyn. index:** -	**Func. diagram:** -
	P-Group: -	**Unit group:** -	**Unit selection:** -
	Not for motor type: -	**Scaling:** -	**Expert list:** 1
	Min	**Max**	**Factory setting**
	0	255	0

Description: Sets the IP address for the onboard PROFINET interface on the Control Unit.
The active IP address is displayed in r8931.

Note: The interface configuration (p8920 and following) is activated with p8925 = 1.
The parameter is not influenced by setting the factory setting.

p8922[0...3] PN Default Gateway of Station / PN Def Gateway

CU_S110-PN	**Can be changed:** U, T	**Calculated:** -	**Access level:** 3
	Data type: Unsigned8	**Dyn. index:** -	**Func. diagram:** -
	P-Group: -	**Unit group:** -	**Unit selection:** -
	Not for motor type: -	**Scaling:** -	**Expert list:** 1
	Min	**Max**	**Factory setting**
	0	255	0

Description: Sets the default gateway for the onboard PROFINET interface on the Control Unit.
The active default gateway is displayed in r8932.

Note: The interface configuration (p8920 and following) is activated with p8925 = 1.
The parameter is not influenced by setting the factory setting.

p8923[0...3] PN Subnet Mask of Station / PN Subnet Mask

CU_S110-PN	**Can be changed:** U, T	**Calculated:** -	**Access level:** 3
	Data type: Unsigned8	**Dyn. index:** -	**Func. diagram:** -
	P-Group: -	**Unit group:** -	**Unit selection:** -
	Not for motor type: -	**Scaling:** -	**Expert list:** 1
	Min	**Max**	**Factory setting**
	0	255	0

Description: Sets the subnet mask for the onboard PROFINET interface on the Control Unit.
The active subnet mask is displayed in r8933.

Note: The interface configuration (p8920 and following) is activated with p8925 = 1.
The parameter is not influenced by setting the factory setting.

p8925 PN interface configuration / PN IF config

CU_S110-PN	**Can be changed:** U, T	**Calculated:** -	**Access level:** 3
	Data type: Integer16	**Dyn. index:** -	**Func. diagram:** -
	P-Group: -	**Unit group:** -	**Unit selection:** -
	Not for motor type: -	**Scaling:** -	**Expert list:** 1
	Min	**Max**	**Factory setting**
	0	3	0

Description: Setting to control the configuration for the onboard PROFINET interface on the Control Unit.
p8925 is automatically set to 0 at the end of the operation.

Value:
0: No function
1: Activate configuration
2: Activate and save configuration
3: Delete configuration

Note: Re p8925 = 1:
The interface configuration (p8920 and following) is activated.
Re p8925 = 2:
The interface configuration (p8920 and following) is activated and saved to non-volatile memory.
Re p8925 = 3:
Restores all memory locations for the interface configuration to the factory settings.
The factory settings for the interface configuration are loaded on activation (p8925 = 1) or at the next POWER ON.

p8929 PN remote controller number / PN rem ctrl num

CU_S110-PN	**Can be changed:** C1(1)	**Calculated:** -	**Access level:** 3
	Data type: Integer16	**Dyn. index:** -	**Func. diagram:** -
	P-Group: Communications	**Unit group:** -	**Unit selection:** -
	Not for motor type: -	**Scaling:** -	**Expert list:** 1
	Min	**Max**	**Factory setting**
	1	2	1

Description: Sets the number of remote controllers expected for PROFINET onboard.
The "Shared Device" functionality is activated with a value = 2.
The drive is being accessed by two PROFINET controllers simultaneously:
- automation controller (SIMOTION or SIMATIC A-CPU).
- safety controller (SIMATIC F-CPU).

Value:
1: Automation or Safety
2: Automation and Safety

Notice: The F CPU may only use PROFIsafe telegrams.
The A CPU must be connected to enable the F CPU to gain access.
Set the value = 1 to commission the F CPU individually.

Note: A change only becomes effective after POWER ON, reset or download.

r8930[0...239] PN Name of Station active / PN Name Stat act

CU_S110-PN	**Can be changed:** -	**Calculated:** -	**Access level:** 3
	Data type: Unsigned8	**Dyn. index:** -	**Func. diagram:** -
	P-Group: -	**Unit group:** -	**Unit selection:** -
	Not for motor type: -	**Scaling:** -	**Expert list:** 1
	Min	**Max**	**Factory setting**
	-	-	-

Description: Displays the active station name for the onboard PROFINET interface on the Control Unit.

r8931[0...3] PN IP Address of Station active / PN IP of Stat act

CU_S110-PN	**Can be changed:** -	**Calculated:** -	**Access level:** 3
	Data type: Unsigned8	**Dyn. index:** -	**Func. diagram:** -
	P-Group: -	**Unit group:** -	**Unit selection:** -
	Not for motor type: -	**Scaling:** -	**Expert list:** 1
	Min	**Max**	**Factory setting**
	-	-	-

Description: Displays the active IP address for the onboard PROFINET interface on the Control Unit.

r8932[0...3] PN Default Gateway of Station active / PN Def Gateway act

CU_S110-PN	**Can be changed:** -	**Calculated:** -	**Access level:** 3
	Data type: Unsigned8	**Dyn. index:** -	**Func. diagram:** -
	P-Group: -	**Unit group:** -	**Unit selection:** -
	Not for motor type: -	**Scaling:** -	**Expert list:** 1
	Min	**Max**	**Factory setting**
	-	-	-

Description: Displays the active default gateway for the onboard PROFINET interface on the Control Unit.

r8933[0...3] PN Subnet Mask of Station active / PN Subnet Mask act

CU_S110-PN	**Can be changed:** -	**Calculated:** -	**Access level:** 3
	Data type: Unsigned8	**Dyn. index:** -	**Func. diagram:** -
	P-Group: -	**Unit group:** -	**Unit selection:** -
	Not for motor type: -	**Scaling:** -	**Expert list:** 1
	Min	**Max**	**Factory setting**
	-	-	-

Description: Displays the active subnet mask for the onboard PROFINET interface on the Control Unit.

r8935[0...5] PN MAC Address of Station / PN MAC of Station

CU_S110-PN	**Can be changed:** -	**Calculated:** -	**Access level:** 3
	Data type: Unsigned8	**Dyn. index:** -	**Func. diagram:** -
	P-Group: -	**Unit group:** -	**Unit selection:** -
	Not for motor type: -	**Scaling:** -	**Expert list:** 1
	Min	**Max**	**Factory setting**
	-	-	-

Description: Displays the MAC address for the onboard PROFINET interface on the Control Unit.

r8939 PN DAP ID / PN DAP ID

CU_S110-PN	**Can be changed:** -	**Calculated:** -	**Access level:** 3
	Data type: Unsigned32	**Dyn. index:** -	**Func. diagram:** -
	P-Group: -	**Unit group:** -	**Unit selection:** -
	Not for motor type: -	**Scaling:** -	**Expert list:** 1
	Min	**Max**	**Factory setting**
	-	-	-

Description: Displays the PROFINET Device Access Point ID (DAP ID) for the onboard PROFINET interface.
The combination of device ID (r8909) and DAP ID uniquely identifies a PROFINET access point.

Note: List of the SINAMICS DAP IDs:
20005 hex: CBE20 V4.3
20006 hex: CBE20 V4.4
20106 hex: CU310-2 PN V4.4
20206 hex: CU305 PN V4.4
20306 hex: CU320-2 PN V4.4

p9210 Flashing component number / Flash comp_no

CU_S110-DP, CU_S110-CAN, CU_S110-PN	**Can be changed:** U, T	**Calculated:** -	**Access level:** 3
	Data type: Unsigned16	**Dyn. index:** -	**Func. diagram:** -
	P-Group: Topology	**Unit group:** -	**Unit selection:** -
	Not for motor type: -	**Scaling:** -	**Expert list:** 1
	Min	**Max**	**Factory setting**
	0	499	0

Description: Sets the component number for a component to get its status LED to flash.

Dependency: Refer to: p9211

p9211 Flash function / Flash fct.

CU_S110-DP, CU_S110-CAN, CU_S110-PN	**Can be changed:** U, T	**Calculated:** -	**Access level:** 3
	Data type: Integer16	**Dyn. index:** -	**Func. diagram:** -
	P-Group: Topology	**Unit group:** -	**Unit selection:** -
	Not for motor type: -	**Scaling:** -	**Expert list:** 1
	Min	**Max**	**Factory setting**
	-1	1	-1

Description: Sets the function for the component selected in p9210.
After initiating a function, the parameter is automatically reset again.
Example:
- Set the component number (p9210).
- Select the "flashing on" function (set p9211 = 1).

Value:
-1: Select function
0: Flashing off
1: Flashing on

Dependency: Refer to: p9210

Notice: If a task cannot be executed (e.g. the component number in p9210 does not exist), the following applies:
- There is no negative feedback signal.
- The value is reset anyway.

p9300 SI Motion monitoring clock cycle (processor 2) / SI Mtn clock P2

SERVO_S110-DP, SERVO_S110-CAN, SERVO_S110-PN

Can be changed: C2(95)	**Calculated:** -	**Access level:** 3
Data type: FloatingPoint32	**Dyn. index:** -	**Func. diagram:** -
P-Group: Safety Integrated	**Unit group:** -	**Unit selection:** -
Not for motor type: -	**Scaling:** -	**Expert list:** 1
Min	**Max**	**Factory setting**
500.00 [µs]	25000.00 [µs]	12000.00 [µs]

Description: Sets the monitoring clock cycle for safe motion monitoring.

Dependency: Refer to: p9500, p9511
Refer to: F01652

Notice: This parameter is overwritten by the copy function of the safety functions integrated in the drive.

Note: The monitoring clock cycle must be a multiple of the actual value sensing clock cycle in p9311 or of the DP clock cycle.
A change only becomes effective after a POWER ON.

p9301 SI Motion enable safety functions (processor 2) / SI Mtn enable P2

SERVO_S110-DP, SERVO_S110-CAN, SERVO_S110-PN

Can be changed: C2(95)	**Calculated:** -	**Access level:** 3
Data type: Unsigned32	**Dyn. index:** -	**Func. diagram:** -
P-Group: Safety Integrated	**Unit group:** -	**Unit selection:** -
Not for motor type: -	**Scaling:** -	**Expert list:** 1
Min	**Max**	**Factory setting**
-	-	0000 0000 0000 0000 0000 0000 0000 0000 bin

Description: Sets the enable signals for the safe motion monitoring.

Bit field:

Bit	Signal name	1 signal	0 signal	FP
00	Enable SOS/SLS	Enable	Inhibit	-
16	Enable SSM hysteresis and filtering	Enable	Inhibit	2860
17	Enable SDI	Enable	Inhibit	2861

Dependency: Refer to: p9501
Refer to: F01682, F01683

Notice: This parameter is overwritten by the copy function of the safety functions integrated in the drive.

Note: A change only becomes effective after a POWER ON.
SDI: Safe Direction (safe motion direction)
SLS: Safely-Limited Speed
SOS: Safe Operating Stop
SSM: Safe Speed Monitor (safety-relevant feedback signal from the velocity monitoring)

p9302 SI Motion axis type (processor 2) / SI Mtn ax type P2

SERVO_S110-DP, SERVO_S110-CAN, SERVO_S110-PN

Can be changed: C2(95)	**Calculated:** -	**Access level:** 3
Data type: Integer16	**Dyn. index:** -	**Func. diagram:** -
P-Group: Safety Integrated	**Unit group:** -	**Unit selection:** -
Not for motor type: -	**Scaling:** -	**Expert list:** 1
Min	**Max**	**Factory setting**
0	1	0

Description: Sets the axis type (linear axis or rotary axis/spindle).

Value:
0: Linear axis
1: Rot axis/spindle

Dependency: Refer to: p9502

Notice: This parameter is overwritten by the copy function of the safety functions integrated in the drive.

Note: For the commissioning software, after changing over the axis type, the units dependent on the axis type are only updated after a project upload.
A change only becomes effective after a POWER ON.

p9306 SI Motion function specification (processor 2) / SI Mtn fct spec P2

SERVO_S110-DP, SERVO_S110-CAN, SERVO_S110-PN

Can be changed: C2(95)	**Calculated:** -	**Access level:** 3
Data type: Integer16	**Dyn. index:** -	**Func. diagram:** -
P-Group: Safety Integrated	**Unit group:** -	**Unit selection:** -
Not for motor type: -	**Scaling:** -	**Expert list:** 1
Min	**Max**	**Factory setting**
0	3	0

Description: Sets the function specification for the safe motion monitoring.

Value:
0: Safety with encoder
1: Safety without encoder
3: Safety without encoder with accel_monitoring/delay time

Dependency: Refer to: C30711

Notice: This parameter is overwritten by the copy function of the safety functions integrated in the drive.

p9307 SI Motion function configuration (processor 2) / SI Mtn config P2

SERVO_S110-DP, SERVO_S110-CAN, SERVO_S110-PN

Can be changed: C2(95)	**Calculated:** -	**Access level:** 3
Data type: Unsigned32	**Dyn. index:** -	**Func. diagram:** -
P-Group: Safety Integrated	**Unit group:** -	**Unit selection:** -
Not for motor type: -	**Scaling:** -	**Expert list:** 1
Min	**Max**	**Factory setting**
-	-	0000 bin

Description: Sets the function configuration for the safe motion monitoring functions.

Bit field:

Bit	Signal name	1 signal	0 signal	FP
00	Extended message acknowledgement	Yes	No	-
01	Setpoint velocity limit for STOP F	No	Yes	-
02	Motor type sensorless actual value sensing	Synchronous motor	Induction motor	-

Dependency: Refer to: C01711

Notice: This parameter is overwritten by the copy function of the safety functions integrated in the drive.

Note:
Re bit 00:
When the function is activated, a safety-relevant acknowledgement (internal event acknowledge) can be performed by selecting/deselecting STO.
Re bit 01:
When the function is activated, the active setpoint velocity limit (CO: r9733) is set to zero when STOP F is active.
Re bit 02:
This bit defines the type of motor, which the sensorless safety technology evaluates.
For bit = 0, the sensorless motion monitoring function calculates the actual velocity for an induction motor.
For bit = 1, an actual velocity is calculated for a synchronous motor. This value depends on the setting in p0300.
Bit = 0 should be set if no motor is defined (p0300 = 0).

p9309 SI Motion behavior during pulse suppression (processor 2) / SI Mtn behav IL P2

SERVO_S110-DP, SERVO_S110-CAN, SERVO_S110-PN

Can be changed: C2(95)	**Calculated:** -	**Access level:** 3
Data type: Unsigned32	**Dyn. index:** -	**Func. diagram:** -
P-Group: Safety Integrated	**Unit group:** -	**Unit selection:** -
Not for motor type: -	**Scaling:** -	**Expert list:** 1
Min	**Max**	**Factory setting**
-	-	0000 0000 1111 1111 bin

Description: Sets the behavior of safety functions and their feedback during pulse suppression in encoderless operation.

Bit field:

Bit	Signal name	1 signal	0 signal	FP
00	SSM during pulse suppression and sensorless	Becomes inactive	Remains active	-
08	SDI during pulse suppression and sensorless	Becomes inactive	Remains active	-

Dependency: Refer to: C01711

Note: SDI: Safe Direction (safe motion direction)
SSM: Safe Speed Monitor (safety-relevant feedback signal from the velocity monitoring)
Re bit 00:
For bit = 1 and with the SSM safety function activated, the following applies:
- During pulse suppression, monitoring is switched off and the feedback signal has a 0 signal level.
For bit = 0 and with the SSM safety function activated, the following applies:
- Monitoring continues during pulse suppression. The feedback signal last displayed before pulse suppression is kept and the system goes into the STO state.
Re bit 08:
For bit = 1 and with the SDI safety function activated, the following applies:
- During pulse suppression, monitoring is switched off and the status signal indicates inactive.
For bit = 0 and with the SDI safety function activated, the following applies:
- Monitoring continues during pulse suppression. The status signal indicates active and the system goes into the STO state.

p9311 SI Motion actual value sensing clock cycle (processor 2) / SI Mtn act clk P2

SERVO_S110-DP, SERVO_S110-CAN, SERVO_S110-PN

Can be changed: C2(95)	**Calculated:** -	**Access level:** 3
Data type: FloatingPoint32	**Dyn. index:** -	**Func. diagram:** -
P-Group: Safety Integrated	**Unit group:** -	**Unit selection:** -
Not for motor type: -	**Scaling:** -	**Expert list:** 1
Min	**Max**	**Factory setting**
250.0000 [µs]	8000.0000 [µs]	2000.0000 [µs]

Description: Sets the clock cycle time of the actual value sensing for safe motion monitoring.
Setting criteria if the motion monitoring functions are executed with an encoder.
- A slower clock cycle time reduces the maximum permissible velocity - however, it ensures a lower load of the Control Unit for safe actual value sensing.
- The maximum permissible velocity which, when exceeded, can mean that errors occur during safe actual value sensing, is displayed in r9730.
- Setting criteria if the motion monitoring functions are executed without an encoder:
- The actual value sensing clock cycle must be set to the same value as the current controller clock cycle (p0115).

Dependency: Refer to: p0115, p9300, p9511
Refer to: F01652

Notice: This parameter is overwritten by the copy function of the safety functions integrated in the drive.

Note: The parameter is only active for drive-based motion monitoring functions (p9601.2 = 1).
The monitoring clock cycle from p9500 must be an integer multiple of this parameter.
In the case of motion monitoring functions with encoder, the clock cycle time for actual value sensing must be an integer multiple of the current controller clock cycle and at least 4 times slower than the current controller clock cycle. A factor of at least 8 is recommended. The value for the parameter must also be greater than or equal to 2 ms.
A change only becomes effective after a POWER ON.

p9315 SI Motion coarse position value configuration (processor 2) / SI Mtn s config P2

SERVO_S110-DP, SERVO_S110-CAN, SERVO_S110-PN

Can be changed: C2(95)	**Calculated:** -	**Access level:** 3
Data type: Unsigned32	**Dyn. index:** -	**Func. diagram:** -
P-Group: Safety Integrated	**Unit group:** -	**Unit selection:** -
Not for motor type: -	**Scaling:** -	**Expert list:** 1
Min	**Max**	**Factory setting**
-	-	0000 0000 0000 0000 0000 0000 0000 0000 bin

Description: Sets the encoder configuration for the redundant coarse position value.
The encoder that is used for the safe motion monitoring functions on processor 2 must be parameterized in this parameter.

Bit field:

Bit	Signal name	1 signal	0 signal	FP
00	Incrementer	Yes	No	-
01	Encoder CRC least significant byte first	Yes	No	-

	02	Redundant coarse position val. most significant bit left-aligned	Yes	No	-
	16	DRIVE-CLiQ encoder	Yes	No	-

Dependency: Refer to: r0474, p9515

p9316 SI Motion encoder configuration safety functions (processor 2) / SI Mtn enc cfg P2

SERVO_S110-DP, SERVO_S110-CAN, SERVO_S110-PN

Can be changed: C2(95)	**Calculated:** -	**Access level:** 3
Data type: Unsigned16	**Dyn. index:** -	**Func. diagram:** -
P-Group: Safety Integrated	**Unit group:** -	**Unit selection:** -
Not for motor type: -	**Scaling:** -	**Expert list:** 1
Min	**Max**	**Factory setting**
-	-	0000 bin

Description: Sets the configuration for the encoder and position actual value.

The encoder that is used for the safe motion monitoring functions on processor 2 must be parameterized in this parameter.

Bit field:

Bit	Signal name	1 signal	0 signal	FP
00	Encoder rotating/linear	Linear	Rotating	-
01	Position actual value sign change	Yes	No	-

Dependency: Refer to: p0404, p0410, p9516

p9317 SI Motion linear scale grid division (processor 2) / SI Mtn grid P2

SERVO_S110-DP, SERVO_S110-CAN, SERVO_S110-PN

Can be changed: C2(95)	**Calculated:** -	**Access level:** 3
Data type: FloatingPoint32	**Dyn. index:** -	**Func. diagram:** -
P-Group: Safety Integrated	**Unit group:** -	**Unit selection:** -
Not for motor type: -	**Scaling:** -	**Expert list:** 1
Min	**Max**	**Factory setting**
0.00 [nm]	250000000.00 [nm]	10000.00 [nm]

Description: Sets the grid division for a linear encoder.

The encoder that is used for the safe motion monitoring functions on processor 2 must be parameterized in this parameter.

Dependency: Refer to: p9316

p9318 SI motion encoder pulses per revolution (processor 2) / SI Mtn p/rev P2

SERVO_S110-DP, SERVO_S110-CAN, SERVO_S110-PN

Can be changed: C2(95)	**Calculated:** -	**Access level:** 3
Data type: Unsigned32	**Dyn. index:** -	**Func. diagram:** -
P-Group: Safety Integrated	**Unit group:** -	**Unit selection:** -
Not for motor type: -	**Scaling:** -	**Expert list:** 1
Min	**Max**	**Factory setting**
0	16777215	2048

Description: Sets the number of encoder pulses per revolution for rotary encoders.

The encoder that is used for the safe motion monitoring functions on processor 2 must be parameterized in this parameter.

Dependency: Refer to: p0408, p9316

p9319 SI Motion fine resolution G1_XIST1 (processor 2) / SI Mtn G1_XIST1 P2

SERVO_S110-DP, SERVO_S110-CAN, SERVO_S110-PN

Can be changed: C2(95)	**Calculated:** -	**Access level:** 3
Data type: Unsigned32	**Dyn. index:** -	**Func. diagram:** -
P-Group: Safety Integrated	**Unit group:** -	**Unit selection:** -
Not for motor type: -	**Scaling:** -	**Expert list:** 1
Min	**Max**	**Factory setting**
2	18	11

Description: Sets the fine resolution for G1_XIST1 in bits.

The encoder that is used for the safe motion monitoring functions on processor 2 must be parameterized in this parameter.

Dependency: Refer to: p0418
Refer to: F01670, F01671

Note: For safety functions that have not been enabled (p9301 = 0), the following applies: When booting, p9319 is automatically set the same as p0418.
For safety functions that are enabled (p9301 > 0), the following applies: p9319 is checked for agreement with p0418.
G1_XIST1: Encoder 1 position actual value 1 (PROFIdrive)

p9320 SI Motion spindle pitch (processor 2) / SI Mtn sp_pitch P2

SERVO_S110-DP, SERVO_S110-CAN, SERVO_S110-PN

Can be changed: C2(95)	**Calculated:** -	**Access level:** 3
Data type: FloatingPoint32	**Dyn. index:** -	**Func. diagram:** -
P-Group: Safety Integrated	**Unit group:** -	**Unit selection:** -
Not for motor type: -	**Scaling:** -	**Expert list:** 1
Min	**Max**	**Factory setting**
0.1000 [mm]	8388.0000 [mm]	10.0000 [mm]

Description: Sets the gear ratio between the encoder and load in mm/revolution for a linear axis with rotary encoder.
The encoder that is used for the safe motion monitoring functions on the Motor Module must be parameterized in this parameter.

Dependency: Refer to: p9520

Notice: The fourth decimal point can be rounded-off depending on the size of the entered number (from 3 places before the decimal point).

p9321[0...7] SI Motion gearbox enc (motor)/load denominator (processor 2) / SI Mtn gear den P2

SERVO_S110-DP, SERVO_S110-CAN, SERVO_S110-PN

Can be changed: C2(95)	**Calculated:** -	**Access level:** 3
Data type: Unsigned32	**Dyn. index:** -	**Func. diagram:** -
P-Group: Safety Integrated	**Unit group:** -	**Unit selection:** -
Not for motor type: -	**Scaling:** -	**Expert list:** 1
Min	**Max**	**Factory setting**
1	2147000000	1

Description: Sets the denominator for the gearbox between the encoder (or motor in the case of encoderless monitoring functions) and the load.

Index: [0] = Gearbox 1
[1] = Gearbox 2
[2] = Gearbox 3
[3] = Gearbox 4
[4] = Gearbox 5
[5] = Gearbox 6
[6] = Gearbox 7
[7] = Gearbox 8

Dependency: Refer to: p9322

Notice: It is not possible to change over the gearbox stages. Gearbox 1 (index 0) is always active.

p9322[0...7] SI Motion gearbox enc (motor)/load numerator (processor 2) / SI Mtn gear num P2

SERVO_S110-DP, SERVO_S110-CAN, SERVO_S110-PN

Can be changed: C2(95)	**Calculated:** -	**Access level:** 3
Data type: Unsigned32	**Dyn. index:** -	**Func. diagram:** -
P-Group: Safety Integrated	**Unit group:** -	**Unit selection:** -
Not for motor type: -	**Scaling:** -	**Expert list:** 1
Min	**Max**	**Factory setting**
1	2147000000	1

Description: Sets the numerator for the gearbox between the encoder (or motor in the case of encoderless monitoring functions) and the load.

Index: [0] = Gearbox 1
[1] = Gearbox 2
[2] = Gearbox 3
[3] = Gearbox 4
[4] = Gearbox 5
[5] = Gearbox 6

[6] = Gearbox 7
[7] = Gearbox 8

Dependency: Refer to: p9321

Notice: It is not possible to change over the gearbox stages. Gearbox 1 (index 0) is always active.

Note: In the case of encoderless monitoring functions, the pole pair number must be multiplied by the numerator of the gearbox ratio.

Example:

Gearbox ratio 1:4, pole pair number (r0313) = 2

--> p9321 = 1, p9322 = 8 (4 x 2)

p9323 SI Motion red. coarse position value valid bits (processor 2) / Valid bits P2

SERVO_S110-DP, SERVO_S110-CAN, SERVO_S110-PN

Can be changed: C2(95)	**Calculated:** -	**Access level:** 3
Data type: Unsigned16	**Dyn. index:** -	**Func. diagram:** -
P-Group: Safety Integrated	**Unit group:** -	**Unit selection:** -
Not for motor type: -	**Scaling:** -	**Expert list:** 1
Min	**Max**	**Factory setting**
0	16	9

Description: Sets the number of valid bits of the redundant coarse position value.

The encoder that is used for the safe motion monitoring functions on processor 2 must be parameterized in this parameter.

Dependency: Refer to: r0470, p9523

p9324 SI Motion redundant coarse pos. value fine resolution bits (P2) / SI Mtn fine bit P2

SERVO_S110-DP, SERVO_S110-CAN, SERVO_S110-PN

Can be changed: C2(95)	**Calculated:** -	**Access level:** 3
Data type: Integer16	**Dyn. index:** -	**Func. diagram:** -
P-Group: Safety Integrated	**Unit group:** -	**Unit selection:** -
Not for motor type: -	**Scaling:** -	**Expert list:** 1
Min	**Max**	**Factory setting**
-16	16	-2

Description: Sets the number of valid bits for the fine resolution of the redundant coarse position value.

The encoder that is used for the safe motion monitoring functions on processor 2 must be parameterized in this parameter.

Dependency: Refer to: r0471, p9524

p9325 SI Motion redundant coarse position value relevant bits (P2) / Relevant bits P2

SERVO_S110-DP, SERVO_S110-CAN, SERVO_S110-PN

Can be changed: C2(95)	**Calculated:** -	**Access level:** 3
Data type: Unsigned16	**Dyn. index:** -	**Func. diagram:** -
P-Group: Safety Integrated	**Unit group:** -	**Unit selection:** -
Not for motor type: -	**Scaling:** -	**Expert list:** 1
Min	**Max**	**Factory setting**
0	16	16

Description: Sets the number of relevant bits for the redundant coarse position value.

The encoder that is used for the safe motion monitoring functions on processor 2 must be parameterized in this parameter.

Dependency: Refer to: p0414, r0472, p9525

p9328[0...11] SI Motion Sensor Module Node Identifier (processor 2) / SI Mtn SM Ident P2

SERVO_S110-DP, SERVO_S110-CAN, SERVO_S110-PN

Can be changed: C2(95)	**Calculated:** -	**Access level:** 3
Data type: Unsigned8	**Dyn. index:** -	**Func. diagram:** -
P-Group: Safety Integrated	**Unit group:** -	**Unit selection:** -
Not for motor type: -	**Scaling:** -	**Expert list:** 1
Min	**Max**	**Factory setting**
0000 hex	00FF hex	0000 hex

Description: Sets the node identifier of the Sensor Module that is used by processor 2 for the motion monitoring functions.

Dependency: Refer to: r9881
Notice: This parameter is overwritten by the copy function of the safety functions integrated in the drive.

p9329 SI Motion Gx_XIST1 coarse pos safe most significant bit (P2) / Gx_XIST1 MSB P2

SERVO_S110-DP, SERVO_S110-CAN, SERVO_S110-PN

Can be changed: C2(95)	**Calculated:** -	**Access level:** 3
Data type: Unsigned16	**Dyn. index:** -	**Func. diagram:** -
P-Group: Safety Integrated	**Unit group:** -	**Unit selection:** -
Not for motor type: -	**Scaling:** -	**Expert list:** 1
Min	**Max**	**Factory setting**
0	31	14

Description: Sets the bit number for the safe most significant bit (MSB) of the Gx_XIST1 coarse position.
The encoder that is used for the safe motion monitoring functions on processor 2 must be parameterized in this parameter.
Dependency: Refer to: p0415, r0475, p9529
Note: MSB: Most Significant Bit

p9330 SI Motion standstill tolerance (processor 2) / SI Mtn SOS Tol P2

SERVO_S110-DP, SERVO_S110-CAN, SERVO_S110-PN

Can be changed: C2(95)	**Calculated:** -	**Access level:** 3
Data type: FloatingPoint32	**Dyn. index:** -	**Func. diagram:** -
P-Group: Safety Integrated	**Unit group:** -	**Unit selection:** -
Not for motor type: -	**Scaling:** -	**Expert list:** 1
Min	**Max**	**Factory setting**
0.000 [mm]	100.000 [mm]	1.000 [mm]

Description: Sets the tolerance for the function "Safe Operating Stop" (SOS).
Dependency: Refer to: p9530
Refer to: C01707
Notice: This parameter is overwritten by the copy function of the safety functions integrated in the drive.
Note: SOS: Safe Operating Stop

p9330 SI Motion standstill tolerance (processor 2) / SI Mtn SOS Tol P2

SERVO_S110-DP (Safety rot), SERVO_S110-CAN (Safety rot), SERVO_S110-PN (Safety rot)

Can be changed: C2(95)	**Calculated:** -	**Access level:** 3
Data type: FloatingPoint32	**Dyn. index:** -	**Func. diagram:** -
P-Group: Safety Integrated	**Unit group:** -	**Unit selection:** -
Not for motor type: -	**Scaling:** -	**Expert list:** 1
Min	**Max**	**Factory setting**
0.000 [°]	100.000 [°]	1.000 [°]

Description: Sets the tolerance for the function "Safe Operating Stop" (SOS).
Dependency: Refer to: p9530
Refer to: C01707
Notice: This parameter is overwritten by the copy function of the safety functions integrated in the drive.
Note: SOS: Safe Operating Stop

p9331[0...3] SI Motion SLS limit values (processor 2) / SI Mtn SLS lim P2

SERVO_S110-DP, SERVO_S110-CAN, SERVO_S110-PN

Can be changed: C2(95)	**Calculated:** -	**Access level:** 3
Data type: FloatingPoint32	**Dyn. index:** -	**Func. diagram:** -
P-Group: Safety Integrated	**Unit group:** -	**Unit selection:** -
Not for motor type: -	**Scaling:** -	**Expert list:** 1
Min	**Max**	**Factory setting**
0.00 [mm/min]	1000000.00 [mm/min]	2000.00 [mm/min]

Description: Sets the limit values for the function "Safely-Limited Speed" (SLS).
Index: [0] = Limit value SLS1
[1] = Limit value SLS2
[2] = Limit value SLS3
[3] = Limit value SLS4

Dependency: Refer to: p9363, p9531
Refer to: C01714
Notice: This parameter is overwritten by the copy function of the safety functions integrated in the drive.
Note: SLS: Safely-Limited Speed

p9331[0...3] SI Motion SLS limit values (processor 2) / SI Mtn SLS lim P2

SERVO_S110-DP (Safety rot), SERVO_S110-CAN (Safety rot), SERVO_S110-PN (Safety rot)

Can be changed: C2(95)	**Calculated:** -	**Access level:** 3
Data type: FloatingPoint32	**Dyn. index:** -	**Func. diagram:** -
P-Group: Safety Integrated	**Unit group:** -	**Unit selection:** -
Not for motor type: -	**Scaling:** -	**Expert list:** 1
Min	**Max**	**Factory setting**
0.00 [rpm]	1000000.00 [rpm]	2000.00 [rpm]

Description: Sets the limit values for the function "Safely-Limited Speed" (SLS).
Index: [0] = Limit value SLS1
[1] = Limit value SLS2
[2] = Limit value SLS3
[3] = Limit value SLS4
Dependency: Refer to: p9363, p9531
Refer to: C01714
Notice: This parameter is overwritten by the copy function of the safety functions integrated in the drive.
Note: SLS: Safely-Limited Speed

p9342 SI Motion act. val. comparison tolerance (crossw.) (processor 2) / SI Mtn actV tol P2

SERVO_S110-DP, SERVO_S110-CAN, SERVO_S110-PN

Can be changed: C2(95)	**Calculated:** -	**Access level:** 3
Data type: FloatingPoint32	**Dyn. index:** -	**Func. diagram:** -
P-Group: Safety Integrated	**Unit group:** -	**Unit selection:** -
Not for motor type: -	**Scaling:** -	**Expert list:** 1
Min	**Max**	**Factory setting**
0.0010 [mm]	360.0000 [mm]	0.1000 [mm]

Description: Sets the tolerance for the crosswise data comparison of the actual position between the two monitoring channels.
For encoderless motion monitoring functions, the tolerance must be set to a higher value (12 degrees rotary and 1 mm linear).
Dependency: Refer to: p9542
Refer to: C01711
Notice: This parameter is overwritten by the copy function of the safety functions integrated in the drive.

p9342 SI Motion act. val. comparison tolerance (crossw.) (processor 2) / SI Mtn actV tol P2

SERVO_S110-DP (Safety rot), SERVO_S110-CAN (Safety rot), SERVO_S110-PN (Safety rot)

Can be changed: C2(95)	**Calculated:** -	**Access level:** 3
Data type: FloatingPoint32	**Dyn. index:** -	**Func. diagram:** -
P-Group: Safety Integrated	**Unit group:** -	**Unit selection:** -
Not for motor type: -	**Scaling:** -	**Expert list:** 1
Min	**Max**	**Factory setting**
0.0010 [°]	360.0000 [°]	0.1000 [°]

Description: Sets the tolerance for the crosswise data comparison of the actual position between the two monitoring channels.
For encoderless motion monitoring functions, the tolerance must be set to a higher value (12 degrees rotary and 1 mm linear).
Dependency: Refer to: p9542
Refer to: C01711
Notice: This parameter is overwritten by the copy function of the safety functions integrated in the drive.

p9345 SI Motion SSM filter time (processor 2) / SI Mtn SSM filt P2

SERVO_S110-DP, SERVO_S110-CAN, SERVO_S110-PN

Can be changed: C2(95)	**Calculated:** -	**Access level:** 3
Data type: FloatingPoint32	**Dyn. index:** -	**Func. diagram:** 2860
P-Group: Safety Integrated	**Unit group:** -	**Unit selection:** -
Not for motor type: -	**Scaling:** -	**Expert list:** 1
Min	**Max**	**Factory setting**
0.00 [µs]	100000.00 [µs]	0.00 [µs]

Description: Sets the filter time for the SSM feedback signal to detect standstill.

Notice: This parameter is overwritten by the copy function of the safety functions integrated in the drive.

Note: The filter time is effective only if the function is enabled (p9301.16 = p9501.16 = 1).
The parameter is included in the crosswise data comparison of the two monitoring channels.
SSM: Safe Speed Monitor (safety-relevant feedback signal from the velocity monitoring)

p9346 SI Motion SSM velocity limit (processor 2) / SI Mtn SSM v_limP2

SERVO_S110-DP, SERVO_S110-CAN, SERVO_S110-PN

Can be changed: C2(95)	**Calculated:** -	**Access level:** 3
Data type: FloatingPoint32	**Dyn. index:** -	**Func. diagram:** 2860
P-Group: Safety Integrated	**Unit group:** -	**Unit selection:** -
Not for motor type: -	**Scaling:** -	**Expert list:** 1
Min	**Max**	**Factory setting**
0.00 [mm/min]	1000000.00 [mm/min]	20.00 [mm/min]

Description: Sets the velocity limit for the SSM feedback signal to detect standstill (n < nx).
When this limit value is undershot, the signal "SSM feedback signal active" is set.
For p9368 = p9568 = 0 the value in p9346/p9546 is also applicable for the function "SAM".

Dependency: Refer to: p9546

Caution: The "SAM" function is switched out if the selected threshold value is undershot.

Notice: This parameter is overwritten by the copy function of the safety functions integrated in the drive.

Note: SAM: Safe Acceleration Monitor (safe acceleration monitoring)
SSM: Safe Speed Monitor (safety-relevant feedback signal from the velocity monitoring)

p9346 SI Motion SSM velocity limit (processor 2) / SI Mtn SSM v_limP2

SERVO_S110-DP (Safety rot), SERVO_S110-CAN (Safety rot), SERVO_S110-PN (Safety rot)

Can be changed: C2(95)	**Calculated:** -	**Access level:** 3
Data type: FloatingPoint32	**Dyn. index:** -	**Func. diagram:** 2860
P-Group: Safety Integrated	**Unit group:** -	**Unit selection:** -
Not for motor type: -	**Scaling:** -	**Expert list:** 1
Min	**Max**	**Factory setting**
0.00 [rpm]	1000000.00 [rpm]	20.00 [rpm]

Description: Sets the velocity limit for the SSM feedback signal to detect standstill (n < nx).
When this limit value is undershot, the signal "SSM feedback signal active" is set.
For p9368 = p9568 = 0 the value in p9346/p9546 is also applicable for the function "SAM".

Dependency: Refer to: p9546

Caution: The "SAM" function is switched out if the selected threshold value is undershot.

Notice: This parameter is overwritten by the copy function of the safety functions integrated in the drive.

Note: SAM: Safe Acceleration Monitor (safe acceleration monitoring)
SSM: Safe Speed Monitor (safety-relevant feedback signal from the velocity monitoring)

p9347 SI Motion SSM velocity hysteresis (processor 2) / SI Mtn SSM Hyst P2

SERVO_S110-DP, SERVO_S110-CAN, SERVO_S110-PN

Can be changed: C2(95)	**Calculated:** -	**Access level:** 3
Data type: FloatingPoint32	**Dyn. index:** -	**Func. diagram:** 2860
P-Group: Safety Integrated	**Unit group:** -	**Unit selection:** -
Not for motor type: -	**Scaling:** -	**Expert list:** 1
Min	**Max**	**Factory setting**
0.0010 [mm/min]	500.0000 [mm/min]	10.0000 [mm/min]

Description: Sets the velocity hysteresis for the SSM feedback signal to detect standstill (n < nx).
Dependency: Refer to: C01711
Notice: This parameter is overwritten by the copy function of the safety functions integrated in the drive.
Note: The velocity hysteresis is effective only if the function is enabled (p9301.16 = p9501.16 = 1).
The parameter is included in the crosswise data comparison of the two monitoring channels.
SSM: Safe Speed Monitor (safety-relevant feedback signal from the velocity monitoring)

p9347 SI Motion SSM velocity hysteresis (processor 2) / SI Mtn SSM Hyst P2

SERVO_S110-DP (Safety rot), SERVO_S110-CAN (Safety rot), SERVO_S110-PN (Safety rot)

Can be changed: C2(95)	**Calculated:** -	**Access level:** 3
Data type: FloatingPoint32	**Dyn. index:** -	**Func. diagram:** 2860
P-Group: Safety Integrated	**Unit group:** -	**Unit selection:** -
Not for motor type: -	**Scaling:** -	**Expert list:** 1
Min	**Max**	**Factory setting**
0.0010 [rpm]	500.0000 [rpm]	10.0000 [rpm]

Description: Sets the velocity hysteresis for the SSM feedback signal to detect standstill (n < nx).
Dependency: Refer to: C01711
Notice: This parameter is overwritten by the copy function of the safety functions integrated in the drive.
Note: The velocity hysteresis is effective only if the function is enabled (p9301.16 = p9501.16 = 1).
The parameter is included in the crosswise data comparison of the two monitoring channels.
SSM: Safe Speed Monitor (safety-relevant feedback signal from the velocity monitoring)

p9348 SI Motion SBR actual velocity tolerance (processor 2) / SI Mtn SBR Tol P2

SERVO_S110-DP, SERVO_S110-CAN, SERVO_S110-PN

Can be changed: C2(95)	**Calculated:** -	**Access level:** 3
Data type: FloatingPoint32	**Dyn. index:** -	**Func. diagram:** -
P-Group: Safety Integrated	**Unit group:** -	**Unit selection:** -
Not for motor type: -	**Scaling:** -	**Expert list:** 1
Min	**Max**	**Factory setting**
0.00 [mm/min]	120000.00 [mm/min]	300.00 [mm/min]

Description: Sets the velocity tolerance for the "SAM" function.
Dependency: Refer to: p9548
Refer to: C01706
Notice: This parameter is overwritten by the copy function of the safety functions integrated in the drive.
Note: SAM: Safe Acceleration Monitor (safe acceleration monitoring)

p9348 SI Motion SBR actual velocity tolerance (processor 2) / SI Mtn SBR Tol P2

SERVO_S110-DP (Safety rot), SERVO_S110-CAN (Safety rot), SERVO_S110-PN (Safety rot)

Can be changed: C2(95)	**Calculated:** -	**Access level:** 3
Data type: FloatingPoint32	**Dyn. index:** -	**Func. diagram:** -
P-Group: Safety Integrated	**Unit group:** -	**Unit selection:** -
Not for motor type: -	**Scaling:** -	**Expert list:** 1
Min	**Max**	**Factory setting**
0.00 [rpm]	120000.00 [rpm]	300.00 [rpm]

Description: Sets the velocity tolerance for the "SAM" function.
Dependency: Refer to: p9548
Refer to: C01706
Notice: This parameter is overwritten by the copy function of the safety functions integrated in the drive.

Note: SAM: Safe Acceleration Monitor (safe acceleration monitoring)

p9349 SI Motion slip velocity tolerance (processor 2) / SI Mtn slip P2

SERVO_S110-DP, SERVO_S110-CAN, SERVO_S110-PN

Can be changed: C2(95)	**Calculated:** -	**Access level:** 3
Data type: FloatingPoint32	**Dyn. index:** -	**Func. diagram:** -
P-Group: Safety Integrated	**Unit group:** -	**Unit selection:** -
Not for motor type: -	**Scaling:** -	**Expert list:** 1
Min	**Max**	**Factory setting**
0.00 [mm/min]	6000.00 [mm/min]	6.00 [mm/min]

Description: Sets the velocity tolerance that is used for a 2-encoder system in crosswise comparison between the two monitoring channels.

Dependency: Refer to: p9301, p9342, p9549

Notice: This parameter is overwritten by the copy function of the safety functions integrated in the drive.

Note: If the "actual value synchronization" is not enabled (p9301.3 = 0), then the value parameterized in p9342 is used as tolerance in the crosswise data comparison.

p9349 SI Motion slip velocity tolerance (processor 2) / SI Mtn slip P2

SERVO_S110-DP (Safety rot), SERVO_S110-CAN (Safety rot), SERVO_S110-PN (Safety rot)

Can be changed: C2(95)	**Calculated:** -	**Access level:** 3
Data type: FloatingPoint32	**Dyn. index:** -	**Func. diagram:** -
P-Group: Safety Integrated	**Unit group:** -	**Unit selection:** -
Not for motor type: -	**Scaling:** -	**Expert list:** 1
Min	**Max**	**Factory setting**
0.00 [rpm]	6000.00 [rpm]	6.00 [rpm]

Description: Sets the velocity tolerance that is used for a 2-encoder system in crosswise comparison between the two monitoring channels.

Dependency: Refer to: p9301, p9342, p9549

Notice: This parameter is overwritten by the copy function of the safety functions integrated in the drive.

Note: If the "actual value synchronization" is not enabled (p9301.3 = 0), then the value parameterized in p9342 is used as tolerance in the crosswise data comparison.

p9351 SI Motion SLS changeover delay time (processor 2) / SI Mtn SLS t P2

SERVO_S110-DP, SERVO_S110-CAN, SERVO_S110-PN

Can be changed: C2(95)	**Calculated:** -	**Access level:** 3
Data type: FloatingPoint32	**Dyn. index:** -	**Func. diagram:** 2825
P-Group: Safety Integrated	**Unit group:** -	**Unit selection:** -
Not for motor type: -	**Scaling:** -	**Expert list:** 1
Min	**Max**	**Factory setting**
0.00 [µs]	600000000.00 [µs]	100000.00 [µs]

Description: Sets the delay time for the SLS changeover or for the changeover from SLS to SOS for the function "Safely-Limited Speed" (SLS).

When transitioning from a higher to a lower safely-limited velocity/speed stage or to the safe operating stop (SOS), within this delay time, the "old" velocity stage remains active.

Even if SLS or SOS is activated from non safety-related operation, then this delay is still applied.

Dependency: Refer to: p9551

Notice: This parameter is overwritten by the copy function of the safety functions integrated in the drive.

Note: SLS: Safely-Limited Speed

SOS: Safe Operating Stop

p9352 SI Motion transition time STOP C to SOS (processor 2) / SI Mtn t C->SOS P2

SERVO_S110-DP, SERVO_S110-CAN, SERVO_S110-PN

Can be changed: C2(95)	**Calculated:** -	**Access level:** 3
Data type: FloatingPoint32	**Dyn. index:** -	**Func. diagram:** 2825
P-Group: Safety Integrated	**Unit group:** -	**Unit selection:** -
Not for motor type: -	**Scaling:** -	**Expert list:** 1
Min	**Max**	**Factory setting**
0.00 [µs]	600000000.00 [µs]	100000.00 [µs]

Description: Sets the transition time from STOP C to "Safe Operating Stop" (SOS).
Dependency: Refer to: p9552
Notice: This parameter is overwritten by the copy function of the safety functions integrated in the drive.
Note: SOS: Safe Operating Stop

p9353 SI Motion transition time STOP D to SOS (processor 2) / SI Mtn t D->SOS P2

SERVO_S110-DP, SERVO_S110-CAN, SERVO_S110-PN

Can be changed: C2(95)	**Calculated:** -	**Access level:** 3
Data type: FloatingPoint32	**Dyn. index:** -	**Func. diagram:** 2825
P-Group: Safety Integrated	**Unit group:** -	**Unit selection:** -
Not for motor type: -	**Scaling:** -	**Expert list:** 1
Min	**Max**	**Factory setting**
0.00 [µs]	600000000.00 [µs]	100000.00 [µs]

Description: Sets the transition time from STOP D to "Safe Operating Stop" (SOS).
Dependency: Refer to: p9553
Notice: This parameter is overwritten by the copy function of the safety functions integrated in the drive.
Note: SOS: Safe Operating Stop

p9355 SI Motion transition time STOP F to STOP B (processor 2) / SI Mtn t F->B P2

SERVO_S110-DP, SERVO_S110-CAN, SERVO_S110-PN

Can be changed: C2(95)	**Calculated:** -	**Access level:** 3
Data type: FloatingPoint32	**Dyn. index:** -	**Func. diagram:** 2825
P-Group: Safety Integrated	**Unit group:** -	**Unit selection:** -
Not for motor type: -	**Scaling:** -	**Expert list:** 1
Min	**Max**	**Factory setting**
0.00 [µs]	600000000.00 [µs]	0.00 [µs]

Description: Sets the transition time from STOP F to STOP B.
Dependency: Refer to: C01711
Notice: This parameter is overwritten by the copy function of the safety functions integrated in the drive.

p9356 SI Motion pulse suppression delay time (processor 2) / SI Mtn IL t_del P2

SERVO_S110-DP, SERVO_S110-CAN, SERVO_S110-PN

Can be changed: C2(95)	**Calculated:** -	**Access level:** 3
Data type: FloatingPoint32	**Dyn. index:** -	**Func. diagram:** 2825
P-Group: Safety Integrated	**Unit group:** -	**Unit selection:** -
Not for motor type: -	**Scaling:** -	**Expert list:** 1
Min	**Max**	**Factory setting**
0.00 [µs]	600000000.00 [µs]	100000.00 [µs]

Description: Sets the delay time for the safe pulse suppression after STOP B / SS1.
In the case of encoderless motion monitoring functions with brake ramp monitoring (p9306 = 1), the parameter has no effect.
Dependency: Refer to: p9360, p9556
Refer to: C01701
Notice: This parameter is overwritten by the copy function of the safety functions integrated in the drive.
Note: SS1: Safe Stop 1

p9357 SI Motion pulse suppression test time (processor 2) / SI Mtn IL t P2

SERVO_S110-DP, SERVO_S110-CAN, SERVO_S110-PN

Can be changed: C2(95)	**Calculated:** -	**Access level:** 3
Data type: FloatingPoint32	**Dyn. index:** -	**Func. diagram:** -
P-Group: Safety Integrated	**Unit group:** -	**Unit selection:** -
Not for motor type: -	**Scaling:** -	**Expert list:** 1
Min	**Max**	**Factory setting**
0.00 [µs]	10000000.00 [µs]	100000.00 [µs]

Description: Sets the time after which the pulses must have been suppressed when initiating the test stop.

Dependency: Refer to: p9557
Refer to: C01798

Notice: This parameter is overwritten by the copy function of the safety functions integrated in the drive.

p9358 SI Motion acceptance test mode time limit (processor 2) / SI Mtn acc t P2

SERVO_S110-DP, SERVO_S110-CAN, SERVO_S110-PN

Can be changed: C2(95)	**Calculated:** -	**Access level:** 3
Data type: FloatingPoint32	**Dyn. index:** -	**Func. diagram:** -
P-Group: Safety Integrated	**Unit group:** -	**Unit selection:** -
Not for motor type: -	**Scaling:** -	**Expert list:** 1
Min	**Max**	**Factory setting**
5000000.00 [µs]	100000000.00 [µs]	40000000.00 [µs]

Description: Sets the maximum time for the acceptance test mode.
If the acceptance test mode takes longer than the selected time limit, then the mode is automatically terminated.

Dependency: Refer to: p9558
Refer to: C01799

Notice: This parameter is overwritten by the copy function of the safety functions integrated in the drive.

p9360 SI Motion pulse suppression shutdown velocity (processor 2) / SI Mtn IL v_sh P2

SERVO_S110-DP, SERVO_S110-CAN, SERVO_S110-PN

Can be changed: C2(95)	**Calculated:** -	**Access level:** 3
Data type: FloatingPoint32	**Dyn. index:** -	**Func. diagram:** -
P-Group: Safety Integrated	**Unit group:** -	**Unit selection:** -
Not for motor type: -	**Scaling:** -	**Expert list:** 1
Min	**Max**	**Factory setting**
0.00 [mm/min]	6000.00 [mm/min]	0.00 [mm/min]

Description: Sets the shutdown velocity for pulse suppression.
Below this velocity "standstill" is assumed and for STOP B / SS1, the pulses are suppressed (by changing to STOP A).
In the case of encoderless motion monitoring functions, the parameter must be > 0 (recommended value: 10).

Dependency: Refer to: p9356, p9560

Notice: This parameter is overwritten by the copy function of the safety functions integrated in the drive.

Note: SS1: Safe Stop 1

p9360 SI Motion pulse suppression shutdown speed (Motor Module) / SI Mtn IL n_sh MM

SERVO_S110-DP (Safety rot), SERVO_S110-CAN (Safety rot), SERVO_S110-PN (Safety rot)

Can be changed: C2(95)	**Calculated:** -	**Access level:** 3
Data type: FloatingPoint32	**Dyn. index:** -	**Func. diagram:** -
P-Group: Safety Integrated	**Unit group:** -	**Unit selection:** -
Not for motor type: -	**Scaling:** -	**Expert list:** 1
Min	**Max**	**Factory setting**
0.00 [rpm]	6000.00 [rpm]	0.00 [rpm]

Description: Sets the shutdown speed for the pulse suppression.
Below this speed "standstill" is assumed and for STOP B / SS1, the pulses are suppressed (by changing to STOP A).

Dependency: Refer to: p9356, p9560

Notice: This parameter is overwritten by the copy function of the safety functions integrated in the drive.

Note: SS1: Safe Stop 1

p9363[0...3] SI Motion SLS stop response (processor 2) / SI Mtn SLS stop P2

SERVO_S110-DP, SERVO_S110-CAN, SERVO_S110-PN

Can be changed: C2(95)	**Calculated:** -	**Access level:** 3
Data type: Integer16	**Dyn. index:** -	**Func. diagram:** -
P-Group: Safety Integrated	**Unit group:** -	**Unit selection:** -
Not for motor type: -	**Scaling:** -	**Expert list:** 1
Min	**Max**	**Factory setting**
0	14	2

Description: Sets the stop response for the function "Safely-Limited Speed" (SLS).
These settings apply to the individual limit values for SLS.
In the case of encoderless motion monitoring (p9306 = 1), only a value of 0 or 1 is permitted.

Value:
0: STOP A
1: STOP B
2: STOP C
3: STOP D
4: STOP E
10: STOP A with delayed pulse suppression when the bus fails
11: STOP B with delayed pulse suppression when the bus fails
12: STOP C with delayed pulse suppression when the bus fails
13: STOP D with delayed pulse suppression when the bus fails
14: STOP E with delayed pulse suppression when the bus fails

Index:
[0] = Limit value SLS1
[1] = Limit value SLS2
[2] = Limit value SLS3
[3] = Limit value SLS4

Dependency: Refer to: p9331, p9563

Notice: This parameter is overwritten by the copy function of the safety functions integrated in the drive.

Note: The values 4 and 14 are not supported on Control Unit 305.
SLS: Safely-Limited Speed

p9364 SI Motion SDI tolerance (processor 2) / SI Mtn SDI tol P2

SERVO_S110-DP, SERVO_S110-CAN, SERVO_S110-PN

Can be changed: C2(95)	**Calculated:** -	**Access level:** 3
Data type: FloatingPoint32	**Dyn. index:** -	**Func. diagram:** 2861
P-Group: Safety Integrated	**Unit group:** -	**Unit selection:** -
Not for motor type: -	**Scaling:** -	**Expert list:** 1
Min	**Max**	**Factory setting**
0.001 [mm]	360.000 [mm]	12.000 [mm]

Description: Sets the tolerance for the function "Safe motion direction" (SDI). This motion in the monitored direction is still permissible before an alarm is initiated.

Dependency: Refer to: p9365, p9366
Refer to: C30716

Notice: This parameter is overwritten by the copy function of the safety functions integrated in the drive. Sets the tolerance for the function "Safe motion direction" (SDI).

Note: SDI: Safe Direction (safe motion direction)

p9364 SI Motion SDI tolerance (processor 2) / SI Mtn SDI tol P2

SERVO_S110-DP (Safety rot), SERVO_S110-CAN (Safety rot), SERVO_S110-PN (Safety rot)

Can be changed: C2(95)	**Calculated:** -	**Access level:** 3
Data type: FloatingPoint32	**Dyn. index:** -	**Func. diagram:** 2861
P-Group: Safety Integrated	**Unit group:** -	**Unit selection:** -
Not for motor type: -	**Scaling:** -	**Expert list:** 1
Min	**Max**	**Factory setting**
0.001 [°]	360.000 [°]	12.000 [°]

Description: Sets the tolerance for the function "Safe motion direction" (SDI). This motion in the monitored direction is still permissible before an alarm is initiated.

Dependency: Refer to: p9365, p9366
Refer to: C30716

Notice: This parameter is overwritten by the copy function of the safety functions integrated in the drive. Sets the tolerance for the function "Safe motion direction" (SDI).

Note: SDI: Safe Direction (safe motion direction)

p9365 SI Motion SDI delay time (processor 2) / SI Mtn SDI t P2

SERVO_S110-DP, SERVO_S110-CAN, SERVO_S110-PN

Can be changed: C2(95)	**Calculated:** -	**Access level:** 3
Data type: FloatingPoint32	**Dyn. index:** -	**Func. diagram:** 2861
P-Group: Safety Integrated	**Unit group:** -	**Unit selection:** -
Not for motor type: -	**Scaling:** -	**Expert list:** 1
Min	**Max**	**Factory setting**
0.00 [µs]	600000000.00 [µs]	100000.00 [µs]

Description: Sets the delay time for the function "Safe motion direction" (SDI). When selecting the SDI function, motion in the monitored direction is permissible as a maximum for this time; this means that this time can be used for braking existing motion.

Dependency: Refer to: p9364, p9366
Refer to: C30716

Notice: This parameter is overwritten by the copy function of the safety functions integrated in the drive.

Note: SDI: Safe Direction (safe motion direction)

p9366 SI Motion SDI stop response (processor 2) / SI Mtn SDI Stop P2

SERVO_S110-DP, SERVO_S110-CAN, SERVO_S110-PN

Can be changed: C2(95)	**Calculated:** -	**Access level:** 3
Data type: Integer16	**Dyn. index:** -	**Func. diagram:** 2861
P-Group: Safety Integrated	**Unit group:** -	**Unit selection:** -
Not for motor type: -	**Scaling:** -	**Expert list:** 1
Min	**Max**	**Factory setting**
0	14	1

Description: Sets the stop response for the function "Safe motion direction" (SDI).
This setting applies to both directions of motion.

Value:
0: STOP A
1: STOP B
2: STOP C
3: STOP D
4: STOP E
10: STOP A with delayed pulse suppression when the bus fails
11: STOP B with delayed pulse suppression when the bus fails
12: STOP C with delayed pulse suppression when the bus fails
13: STOP D with delayed pulse suppression when the bus fails
14: STOP E with delayed pulse suppression when the bus fails

Dependency: Refer to: p9364, p9365
Refer to: C30716

Notice: This parameter is overwritten by the copy function of the safety functions integrated in the drive.

Note: The values 4 and 14 are not supported on Control Unit 305.
SDI: Safe Direction (safe motion direction)

p9368 SI Motion SAM velocity limit (processor 2) / SI Mtn SAM v_limP2

SERVO_S110-DP, SERVO_S110-CAN, SERVO_S110-PN

Can be changed: C2(95)	**Calculated:** -	**Access level:** 3
Data type: FloatingPoint32	**Dyn. index:** -	**Func. diagram:** -
P-Group: Safety Integrated	**Unit group:** -	**Unit selection:** -
Not for motor type: -	**Scaling:** -	**Expert list:** 1
Min	**Max**	**Factory setting**
0.00 [mm/min]	1000.00 [mm/min]	0.00 [mm/min]

Description: Sets the velocity tolerance limit for the "SAM" function.
SAM is de-activated once the set velocity limit has been undershot.

Notice: This parameter is overwritten by the copy function of the safety functions integrated in the drive.

Note: SAM: Safe Acceleration Monitor (safe acceleration monitoring)
SSM: Safe Speed Monitor (safety-relevant feedback signal from the velocity monitoring)
For p9568 = p9368 = 0, the following applies:
The value in p9546/p9346 (SSM) is applied as the velocity limit for SAM.

p9368 SI Motion SAM velocity limit (processor 2) / SI Mtn SAM v_limP2

SERVO_S110-DP (Safety rot), SERVO_S110-CAN (Safety rot), SERVO_S110-PN (Safety rot)

Can be changed: C2(95)	**Calculated:** -	**Access level:** 3
Data type: FloatingPoint32	**Dyn. index:** -	**Func. diagram:** -
P-Group: Safety Integrated	**Unit group:** -	**Unit selection:** -
Not for motor type: -	**Scaling:** -	**Expert list:** 1
Min	**Max**	**Factory setting**
0.00 [rpm]	1000.00 [rpm]	0.00 [rpm]

Description: Sets the velocity tolerance limit for the "SAM" function.
SAM is de-activated once the set velocity limit has been undershot.
Notice: This parameter is overwritten by the copy function of the safety functions integrated in the drive.
Note: SAM: Safe Acceleration Monitor (safe acceleration monitoring)
SSM: Safe Speed Monitor (safety-relevant feedback signal from the velocity monitoring)
For p9568 = p9368 = 0, the following applies:
The value in p9546/p9346 (SSM) is applied as the velocity limit for SAM.

p9370 SI Motion acceptance test mode (processor 2) / SI Mtn acc_mod P2

SERVO_S110-DP, SERVO_S110-CAN, SERVO_S110-PN

Can be changed: U, T	**Calculated:** -	**Access level:** 3
Data type: Integer16	**Dyn. index:** -	**Func. diagram:** -
P-Group: Safety Integrated	**Unit group:** -	**Unit selection:** -
Not for motor type: -	**Scaling:** -	**Expert list:** 1
Min	**Max**	**Factory setting**
0000 hex	00AC hex	0000 hex

Description: Setting to select and de-select the acceptance test mode.
Value:
0: [00 hex] De-select the acceptance test mode
172: [AC hex] Select the acceptance test mode
Dependency: Refer to: p9358, r9371
Refer to: C01799
Note: Acceptance test mode can only be selected if the motion monitoring functions, which are integrated in the drives, are enabled (p9601.2/p9801.2).

r9371 SI Motion acceptance test status (processor 2) / SI Mtn acc_stat P2

SERVO_S110-DP, SERVO_S110-CAN, SERVO_S110-PN

Can be changed: -	**Calculated:** -	**Access level:** 3
Data type: Integer16	**Dyn. index:** -	**Func. diagram:** -
P-Group: Safety Integrated	**Unit group:** -	**Unit selection:** -
Not for motor type: -	**Scaling:** -	**Expert list:** 1
Min	**Max**	**Factory setting**
0000 hex	00AC hex	-

Description: Displays the status of the acceptance test mode.
Value:
0: [00 hex] Acc_mode inactive
12: [0C hex] Acc_mode not possible due to POWER ON fault
13: [0D hex] Acc_mode not possible due to incorrect ID in p9370
15: [0F hex] Acc_mode not possible due to expired Acc_timer
172: [AC hex] Acc_mode active
Dependency: Refer to: p9358, p9370
Refer to: C01799

p9381 SI Motion brake ramp reference value (processor 2) / SI Mtn ramp ref P2

SERVO_S110-DP, SERVO_S110-CAN, SERVO_S110-PN

Can be changed: C2(95)	**Calculated:** -	**Access level:** 3
Data type: FloatingPoint32	**Dyn. index:** -	**Func. diagram:** -
P-Group: Safety Integrated	**Unit group:** -	**Unit selection:** -
Not for motor type: -	**Scaling:** -	**Expert list:** 1
Min	**Max**	**Factory setting**
600.0000 [mm/min]	24000.0000 [mm/min]	1500.0000 [mm/min]

Description: Sets the reference value to define the brake ramp.
The rate of rise of the brake ramp depends upon p9381 (reference value) and p9383 (monitoring time).

Dependency: Refer to: p9382, p9383

Notice: This parameter is overwritten by the copy function of the safety functions integrated in the drive.

p9381 SI Motion brake ramp reference value (processor 2) / SI Mtn ramp ref P2

SERVO_S110-DP (Safety rot), SERVO_S110-CAN (Safety rot), SERVO_S110-PN (Safety rot)

Can be changed: C2(95)	**Calculated:** -	**Access level:** 3
Data type: FloatingPoint32	**Dyn. index:** -	**Func. diagram:** -
P-Group: Safety Integrated	**Unit group:** -	**Unit selection:** -
Not for motor type: -	**Scaling:** -	**Expert list:** 1
Min	**Max**	**Factory setting**
600.0000 [rpm]	24000.0000 [rpm]	1500.0000 [rpm]

Description: Sets the reference value to define the brake ramp.
The rate of rise of the brake ramp depends upon p9381 (reference value) and p9383 (monitoring time).

Dependency: Refer to: p9382, p9383

Notice: This parameter is overwritten by the copy function of the safety functions integrated in the drive.

p9382 SI Motion brake ramp delay time (processor 2) / SI Mtn rp t_del P2

SERVO_S110-DP, SERVO_S110-CAN, SERVO_S110-PN

Can be changed: C2(95)	**Calculated:** -	**Access level:** 3
Data type: FloatingPoint32	**Dyn. index:** -	**Func. diagram:** -
P-Group: Safety Integrated	**Unit group:** -	**Unit selection:** -
Not for motor type: -	**Scaling:** -	**Expert list:** 1
Min	**Max**	**Factory setting**
10000.00 [µs]	99000000.00 [µs]	250000.00 [µs]

Description: Sets the delay time for monitoring the brake ramp.
Monitoring of the brake ramp starts once the delay time has elapsed.

Dependency: Refer to: p9381, p9383

Notice: This parameter is overwritten by the copy function of the safety functions integrated in the drive.

p9383 SI Motion brake ramp monitoring time (processor 2) / SI Mtn rp t_mon P2

SERVO_S110-DP, SERVO_S110-CAN, SERVO_S110-PN

Can be changed: C2(95)	**Calculated:** -	**Access level:** 3
Data type: FloatingPoint32	**Dyn. index:** -	**Func. diagram:** -
P-Group: Safety Integrated	**Unit group:** -	**Unit selection:** -
Not for motor type: -	**Scaling:** -	**Expert list:** 1
Min	**Max**	**Factory setting**
500.00 [ms]	1000000.00 [ms]	10000.00 [ms]

Description: Sets the monitoring time to define the brake ramp.
The rate of rise of the brake ramp depends upon p9381 (reference value) and p9383 (monitoring time).

Dependency: Refer to: p9381, p9382

Notice: This parameter is overwritten by the copy function of the safety functions integrated in the drive.

p9386 SI Motion delay time of the evaluation sensorless (processor 2) / SI Mtn t_del SL MM

SERVO_S110-DP, SERVO_S110-CAN, SERVO_S110-PN

Can be changed: C2(95)	**Calculated:** -	**Access level:** 3
Data type: FloatingPoint32	**Dyn. index:** -	**Func. diagram:** -
P-Group: Safety Integrated	**Unit group:** -	**Unit selection:** -
Not for motor type: -	**Scaling:** -	**Expert list:** 1
Min	**Max**	**Factory setting**
5.00 [ms]	1000.00 [ms]	100.00 [ms]

Description: Sets the evaluation delay for encoderless actual value sensing after pulse enable.
The value should be greater than or equal to the motor magnetizing time.

Dependency: Refer to: C01711

p9387 SI Motion act val sensing sensorless filter time (processor 2) / SI Mtn SL filt P2

SERVO_S110-DP, SERVO_S110-CAN, SERVO_S110-PN

Can be changed: C2(95)	**Calculated:** -	**Access level:** 3
Data type: FloatingPoint32	**Dyn. index:** -	**Func. diagram:** -
P-Group: Safety Integrated	**Unit group:** -	**Unit selection:** -
Not for motor type: -	**Scaling:** -	**Expert list:** 1
Min	**Max**	**Factory setting**
0.00 [µs]	100000.00 [µs]	25000.00 [µs]

Description: Sets the filter time for smoothing the actual value with sensorless actual value sensing.

Notice: This parameter is overwritten by the copy function of the safety functions integrated in the drive.

Note: This parameter is only effective for encoderless actual value sensing (p9306/p9506 = 1).

p9388 SI Motion act val sensing sensorless min current (processor 2) / SI Mtn SL I_min P2

SERVO_S110-DP, SERVO_S110-CAN, SERVO_S110-PN

Can be changed: C2(95)	**Calculated:** -	**Access level:** 3
Data type: FloatingPoint32	**Dyn. index:** -	**Func. diagram:** -
P-Group: Safety Integrated	**Unit group:** -	**Unit selection:** -
Not for motor type: -	**Scaling:** -	**Expert list:** 1
Min	**Max**	**Factory setting**
0.00 [%]	1000.00 [%]	10.00 [%]

Description: Sets the minimum current for encoderless actual value sensing in reference to 10 mA (i.e. when 1 % = 10 mA).
- The value must be increased if C30711 has occurred with message value 1042.
- The value must be decreased if C30711 has occurred with message value 1041.

Dependency: Refer to: C30711

Notice: This parameter is overwritten by the copy function of the safety functions integrated in the drive.
Reducing this percentage value can adversely affect actual value sensing.

Note: This parameter is only effective for encoderless actual value sensing (p9306/p9506 = 1).

p9389 SI Motion voltage tolerance acceleration (processor 2) / SI Mtn U tol P2

SERVO_S110-DP, SERVO_S110-CAN, SERVO_S110-PN

Can be changed: C2(95)	**Calculated:** -	**Access level:** 3
Data type: FloatingPoint32	**Dyn. index:** -	**Func. diagram:** -
P-Group: Safety Integrated	**Unit group:** -	**Unit selection:** -
Not for motor type: -	**Scaling:** -	**Expert list:** 1
Min	**Max**	**Factory setting**
10.00 [%]	1000.00 [%]	100.00 [%]

Description: Sets the voltage tolerance for suppressing acceleration peaks.
Increasing this percentage value means that voltage peaks will need to have a higher amplitude during acceleration procedures if they are not to affect actual value sensing.
- The value must be increased if C30711 has occurred with message value 1042.
- The value must be lowered if acceleration procedures have led to an excessive Safety actual velocity.

Dependency: Refer to: C30711

Notice: This parameter is overwritten by the copy function of the safety functions integrated in the drive.

Note: This parameter is only effective for encoderless actual value sensing (p9306/p9506 = 1).

r9398[0...1] SI Motion actual checksum SI parameters (processor 2) / SI Mtn act CRC P2

SERVO_S110-DP, SERVO_S110-CAN, SERVO_S110-PN

Can be changed: -	**Calculated:** -	**Access level:** 3
Data type: Unsigned32	**Dyn. index:** -	**Func. diagram:** -
P-Group: Safety Integrated	**Unit group:** -	**Unit selection:** -
Not for motor type: -	**Scaling:** -	**Expert list:** 1
Min	**Max**	**Factory setting**
-	-	-

Description: Displays the checksum over the checked Safety Integrated parameters of the motion monitoring functions (actual checksum) on processor 2.

Index: [0] = Checksum over SI parameters for motion monitoring
[1] = Checksum over SI parameters with hardware reference

Dependency: Refer to: p9399

Note: SI: Safety Integrated

p9399[0...1] SI Motion setpoint checksum SI parameters (processor 2) / SI Mtn setp CRC P2

SERVO_S110-DP, SERVO_S110-CAN, SERVO_S110-PN

Can be changed: C2(95)	**Calculated:** -	**Access level:** 3
Data type: Unsigned32	**Dyn. index:** -	**Func. diagram:** -
P-Group: Safety Integrated	**Unit group:** -	**Unit selection:** -
Not for motor type: -	**Scaling:** -	**Expert list:** 1
Min	**Max**	**Factory setting**
0000 hex	FFFF FFFF hex	0000 hex

Description: Sets the checksum over the checked Safety Integrated parameters of the motion monitoring functions (actual checksum) on processor 2.

Index: [0] = Checksum over SI parameters for motion monitoring
[1] = Checksum over SI parameters with hardware reference

Dependency: Refer to: r9398

Note: SI: Safety Integrated

p9400 Safely remove memory card / Mem_card rem

CU_S110-DP, CU_S110-CAN, CU_S110-PN

Can be changed: T	**Calculated:** -	**Access level:** 2
Data type: Integer16	**Dyn. index:** -	**Func. diagram:** -
P-Group: -	**Unit group:** -	**Unit selection:** -
Not for motor type: -	**Scaling:** -	**Expert list:** 1
Min	**Max**	**Factory setting**
0	100	0

Description: Setting and display when memory card is "removed safely".
Procedure:
Setting p9400 = 2 results in a value of 3
--> The memory card can be removed safely. After removal the value sets itself to 0 automatically.
Setting p9400 = 2 results in a value of 100
--> The memory card cannot be removed safely. Removal may destroy the file system on the memory card. It may be necessary to set p9400 = 2 again.

Value:
0: No memory card inserted
1: Memory card inserted
2: Request "safe removal" of the memory card
3: "Safe removal" possible
100: "Safe removal" not possible due to access

Dependency: Refer to: r9401

Caution: Removing the memory card without a request (p9400 = 2) and confirmation (p9400 = 3) may destroy the file system on the memory card. The memory card will then no longer work properly and must be repaired.

Note: The status when the memory card is being "removed safely" is shown in r9401.
Re value = 0, 1, 3, 100:
These values can only be displayed, not set.

r9401 Safely remove memory card status / Mem_card rem stat

CU_S110-DP, CU_S110-CAN, CU_S110-PN

Can be changed: -	**Calculated:** -	**Access level:** 2
Data type: Unsigned16	**Dyn. index:** -	**Func. diagram:** -
P-Group: -	**Unit group:** -	**Unit selection:** -
Not for motor type: -	**Scaling:** -	**Expert list:** 1
Min	**Max**	**Factory setting**
-	-	-

Description: Displays the status of the memory card.

Bit field:

Bit	Signal name	1 signal	0 signal	FP
00	Memory card inserted	Yes	No	-
01	Memory card activated	Yes	No	-

Dependency: Refer to: p9400

Note: Re bit 00 and bit 01:

Bit 1/0 = 0/0: No memory card inserted (corresponds to p9400 = 0).

Bit 1/0 = 0/1: "Safe removal" possible (corresponds to p9400 = 3).

Bit 1/0 = 1/0: Status not possible.

Bit 1/0 = 1/1: Memory card inserted (corresponds to p9400 = 1, 2, 100).

r9406[0...19] PS file parameter number parameter not transferred / PS par_no n transf

CU_S110-DP, CU_S110-CAN, CU_S110-PN, SERVO_S110-DP, SERVO_S110-CAN, SERVO_S110-PN

Can be changed: -	**Calculated:** -	**Access level:** 4
Data type: Unsigned16	**Dyn. index:** -	**Func. diagram:** -
P-Group: -	**Unit group:** -	**Unit selection:** -
Not for motor type: -	**Scaling:** -	**Expert list:** 1
Min	**Max**	**Factory setting**
-	-	-

Description: Displays the parameters that were not able to be transferred when reading the parameter back-up files (PS files) from the non-volatile memory (e.g. memory card).

r9406[0] = 0

--> All of the parameter values were able to be transferred error-free.

r9406[0...x] > 0

--> indicates the parameter number in the following cases:

- parameter, whose value was not able to be completely accepted.

- indexed parameter, where at least 1 index was not able to be accepted. The first index that is not transferred is displayed in r9407.

Dependency: Refer to: r9407, r9408

Note: All indices from r9406 to r9408 designate the same parameter.

r9406[x] parameter number, parameter not accepted

r9407[x] parameter index, parameter not accepted

r9408[x] fault code, parameter not accepted

r9407[0...19] PS file parameter index parameter not transferred / PS parameter index

CU_S110-DP, CU_S110-CAN, CU_S110-PN, SERVO_S110-DP, SERVO_S110-CAN, SERVO_S110-PN

Can be changed: -	**Calculated:** -	**Access level:** 4
Data type: Unsigned16	**Dyn. index:** -	**Func. diagram:** -
P-Group: -	**Unit group:** -	**Unit selection:** -
Not for motor type: -	**Scaling:** -	**Expert list:** 1
Min	**Max**	**Factory setting**
-	-	-

Description: Displays the first index of the parameters that could not be transferred when the parameter backup files (PS files) were read from the non-volatile memory (e.g. memory card).

If, from an indexed parameter, at least one index was not able to be transferred, then the parameter number is displayed in r9406[n] and the first index that was not transferred is displayed in r9407[n].

r9406[0] = 0
--> All of the parameter values were able to be transferred error-free.
r9406[n] > 0
--> Displays r9407[n] the first index of the parameter number r9406[n] that was not transferred.

Dependency: Refer to: r9406, r9408

Note: All indices from r9406 to r9408 designate the same parameter.
r9406[x] parameter number, parameter not accepted
r9407[x] parameter index, parameter not accepted
r9408[x] fault code, parameter not accepted

r9408[0...19] PS file fault code parameter not transferred / PS fault code

CU_S110-DP, CU_S110-CAN, CU_S110-PN, SERVO_S110-DP, SERVO_S110-CAN, SERVO_S110-PN

Can be changed: -	**Calculated:** -	**Access level:** 4
Data type: Unsigned16	**Dyn. index:** -	**Func. diagram:** -
P-Group: -	**Unit group:** -	**Unit selection:** -
Not for motor type: -	**Scaling:** -	**Expert list:** 1
Min	**Max**	**Factory setting**
-	-	-

Description: Only for internal Siemens service purposes.

Dependency: Refer to: r9406, r9407

Note: All indices from r9406 to r9408 designate the same parameter.
r9406[x] parameter number, parameter not accepted
r9407[x] parameter index, parameter not accepted
r9408[x] fault code, parameter not accepted

r9409 Number of parameters to be saved / Qty par to save

CU_S110-DP, CU_S110-CAN, CU_S110-PN, SERVO_S110-DP, SERVO_S110-CAN, SERVO_S110-PN

Can be changed: -	**Calculated:** -	**Access level:** 4
Data type: Unsigned16	**Dyn. index:** -	**Func. diagram:** -
P-Group: -	**Unit group:** -	**Unit selection:** -
Not for motor type: -	**Scaling:** -	**Expert list:** 1
Min	**Max**	**Factory setting**
-	-	-

Description: Displays the number of modified parameters and those that have still not be saved for this drive object.

Dependency: Refer to: p0971, p0977

Note: The modified parameters that still need to be saved are internally listed in r9410 ... r9419.

r9450[0...29] Reference value change parameter with unsuccessful calculation / Ref_chg par n poss

SERVO_S110-DP, SERVO_S110-CAN, SERVO_S110-PN

Can be changed: -	**Calculated:** -	**Access level:** 2
Data type: Unsigned32	**Dyn. index:** -	**Func. diagram:** -
P-Group: -	**Unit group:** -	**Unit selection:** -
Not for motor type: -	**Scaling:** -	**Expert list:** 1
Min	**Max**	**Factory setting**
-	-	-

Description: Displays the parameters for which the re-calculation was unsuccessful after an internal system reference value change.

Dependency: Refer to: F07086

r9451[0...29] Units changeover adapted parameters / Unit_chngov par

SERVO_S110-DP, SERVO_S110-CAN, SERVO_S110-PN

Can be changed: -	**Calculated:** -	**Access level:** 1
Data type: Unsigned32	**Dyn. index:** -	**Func. diagram:** -
P-Group: -	**Unit group:** -	**Unit selection:** -
Not for motor type: -	**Scaling:** -	**Expert list:** 1
Min	**Max**	**Factory setting**
-	-	-

Description: Displays the parameters whose parameter would have to be changed during a units changeover.
Dependency: Refer to: F07088

r9481 Number of BICO interconnections / BICO count

CU_S110-DP, CU_S110-CAN, CU_S110-PN, SERVO_S110-DP, SERVO_S110-CAN, SERVO_S110-PN

Can be changed: -	**Calculated:** -	**Access level:** 3
Data type: Unsigned16	**Dyn. index:** -	**Func. diagram:** -
P-Group: Commands	**Unit group:** -	**Unit selection:** -
Not for motor type: -	**Scaling:** -	**Expert list:** 0
Min	**Max**	**Factory setting**
-	-	-

Description: Displays the number of BICO interconnections (signal sinks).
Dependency: Refer to: r9482, r9483
Note: The selected BICO interconnections should be entered into r9482 and r9483.

r9482[0...n] BICO interconnections BI/CI parameters / BICO BI/CI par

CU_S110-DP, CU_S110-CAN, CU_S110-PN, SERVO_S110-DP, SERVO_S110-CAN, SERVO_S110-PN

Can be changed: -	**Calculated:** -	**Access level:** 3
Data type: Unsigned32	**Dyn. index:** r9481	**Func. diagram:** -
P-Group: Commands	**Unit group:** -	**Unit selection:** -
Not for motor type: -	**Scaling:** -	**Expert list:** 0
Min	**Max**	**Factory setting**
-	-	-

Description: Displays the signal sinks (binector/connector inputs, BI/CI parameters).
The number of BICO interconnections is displayed in r9481.
Dependency: Refer to: r9481, r9483
Note: The list is sorted according to signal sources and is structured as follows:
r9842[0]: Interconnection 1 (signal sink, BICO coded), r9843[0]: Interconnection 1 (signal source, BICO coded)
r9842[1]: Interconnection 2 (signal sink, BICO coded), r9843[1]: Interconnection 2 (signal source, BICO coded)
...

r9483[0...n] BICO interconnections BO/CO parameters / BICO BO/CO par

CU_S110-DP, CU_S110-CAN, CU_S110-PN, SERVO_S110-DP, SERVO_S110-CAN, SERVO_S110-PN

Can be changed: -	**Calculated:** -	**Access level:** 3
Data type: Unsigned32	**Dyn. index:** r9481	**Func. diagram:** -
P-Group: Commands	**Unit group:** -	**Unit selection:** -
Not for motor type: -	**Scaling:** -	**Expert list:** 0
Min	**Max**	**Factory setting**
-	-	-

Description: Displays the signal sources (binector/connector outputs, BO/CO parameters).
The number of BICO interconnections is displayed in r9481.
Dependency: Refer to: r9481, r9482
Note: The list is sorted according to signal sources and is structured as follows:
r9842[0]: Interconnection 1 (signal sink, BICO coded), r9843[0]: Interconnection 1 (signal source, BICO coded)
r9842[1]: Interconnection 2 (signal sink, BICO coded), r9843[1]: Interconnection 2 (signal source, BICO coded)
...

p9484 BICO interconnections search signal source / BICO S_src srch

CU_S110-DP, CU_S110-CAN, CU_S110-PN, SERVO_S110-DP, SERVO_S110-CAN, SERVO_S110-PN

Can be changed: U, T	**Calculated:** -	**Access level:** 3
Data type: Unsigned32	**Dyn. index:** -	**Func. diagram:** -
P-Group: -	**Unit group:** -	**Unit selection:** -
Not for motor type: -	**Scaling:** -	**Expert list:** 0
Min	**Max**	**Factory setting**
0	4294967295	0

Description: Sets the signal source (BO/CO parameter, BICO coded) to search in the signal sinks.
The question is answered:
How often is a connection made to a signal source in the drive object and from which index are these interconnections saved (r9482 and r9483)?

Dependency: Refer to: r9481, r9482, r9483, r9485, r9486

r9485 BICO interconnections signal source search count / BICO S_src srchQty

CU_S110-DP, CU_S110-CAN, CU_S110-PN, SERVO_S110-DP, SERVO_S110-CAN, SERVO_S110-PN

Can be changed: -	**Calculated:** -	**Access level:** 3
Data type: Unsigned16	**Dyn. index:** -	**Func. diagram:** -
P-Group: -	**Unit group:** -	**Unit selection:** -
Not for motor type: -	**Scaling:** -	**Expert list:** 0
Min	**Max**	**Factory setting**
-	-	-

Description: Displays the number of BICO interconnections to the signal sink being searched for.

Dependency: Refer to: r9481, r9482, r9483, p9484, r9486

Note: The signal source to be searched is set in p9484 (BICO-coded).
The search result is contained in r9482 and r9483 and is specified by the count (r9485) and the first index (r9486).

r9486 BICO interconnections signal source search first index / BICO S_src srchIdx

CU_S110-DP, CU_S110-CAN, CU_S110-PN, SERVO_S110-DP, SERVO_S110-CAN, SERVO_S110-PN

Can be changed: -	**Calculated:** -	**Access level:** 3
Data type: Unsigned16	**Dyn. index:** -	**Func. diagram:** -
P-Group: -	**Unit group:** -	**Unit selection:** -
Not for motor type: -	**Scaling:** -	**Expert list:** 0
Min	**Max**	**Factory setting**
-	-	-

Description: Displays the first index of the signal source being searched for.

Dependency: Refer to: r9481, r9482, r9483, p9484, r9485

Note: The signal source to be searched is set in p9484 (BICO-coded).
The search result is contained in r9482 and r9483 and is specified by the count (r9485) and the first index (r9486).

p9500 SI Motion monitoring clock cycle (processor 1) / SI Mtn clock P1

SERVO_S110-DP, SERVO_S110-CAN, SERVO_S110-PN

Can be changed: C2(95)	**Calculated:** -	**Access level:** 3
Data type: FloatingPoint32	**Dyn. index:** -	**Func. diagram:** -
P-Group: Safety Integrated	**Unit group:** -	**Unit selection:** -
Not for motor type: -	**Scaling:** -	**Expert list:** 1
Min	**Max**	**Factory setting**
0.50 [ms]	25.00 [ms]	12.00 [ms]

Description: Sets the monitoring clock cycle for safe motion monitoring.

Dependency: Refer to: r2064, p9511
Refer to: F01652

Note: A change only becomes effective after a POWER ON.
The monitoring clock cycle must be a multiple of the actual value sensing clock cycle in p9511 (dbSI) or of the DP clock cycle (ncSI).

p9501 SI Motion enable safety functions (processor 1) / SI Mtn enable P1

SERVO_S110-DP, SERVO_S110-CAN, SERVO_S110-PN

Can be changed: C2(95)	**Calculated:** -	**Access level:** 3
Data type: Unsigned32	**Dyn. index:** -	**Func. diagram:** -
P-Group: Safety Integrated	**Unit group:** -	**Unit selection:** -
Not for motor type: -	**Scaling:** -	**Expert list:** 1
Min	**Max**	**Factory setting**
-	-	0000 0000 0000 0000 0000 0000 0000 0000 bin

Description: Sets the enable signals for the safe motion monitoring.

Bit field:

Bit	Signal name	1 signal	0 signal	FP
00	Enable SOS/SLS (SBH/SG)	Enable	Inhibit	-
16	Enable SSM hysteresis and filtering	Enable	Inhibit	2860
17	Enable SDI	Enable	Inhibit	2861

Dependency: Refer to: F01682, F01683

Note: A change only becomes effective after a POWER ON.
SDI: Safe Direction (safe motion direction)
SLS: Safely-Limited Speed
SOS: Safe Operating Stop
SSM: Safe Speed Monitor (safety-relevant feedback signal from the velocity monitoring)

p9502 SI Motion axis type (processor 1) / SI Mtn ax type P1

SERVO_S110-DP, SERVO_S110-CAN, SERVO_S110-PN

Can be changed: C2(95)	**Calculated:** -	**Access level:** 3
Data type: Integer16	**Dyn. index:** -	**Func. diagram:** -
P-Group: Safety Integrated	**Unit group:** -	**Unit selection:** -
Not for motor type: -	**Scaling:** -	**Expert list:** 1
Min	**Max**	**Factory setting**
0	1	0

Description: Sets the axis type (linear axis or rotary axis/spindle).

Value:
0: Linear axis
1: Rot axis/spindle

Note: For the commissioning software, after changing over the axis type, the units dependent on the axis type are only updated after a project upload.
A change only becomes effective after a POWER ON.

p9503 SI Motion SCA (SN) enable (Control Unit) / SI Mtn SCA enab

SERVO_S110-DP, SERVO_S110-CAN, SERVO_S110-PN

Can be changed: U, T	**Calculated:** -	**Access level:** 4
Data type: Unsigned32	**Dyn. index:** -	**Func. diagram:** -
P-Group: Safety Integrated	**Unit group:** -	**Unit selection:** -
Not for motor type: -	**Scaling:** -	**Expert list:** 1
Min	**Max**	**Factory setting**
-	-	0000 0000 0000 0000 0000 0000 0000 0000 bin

Description: Setting to enable the function "Safe Cam" (SCA).

Bit field:

Bit	Signal name	1 signal	0 signal	FP
00	Enable SCA1 (SN1)	Enable	Inhibit	-
01	Enable SCA2 (SN2)	Enable	Inhibit	-
02	Enable SCA3 (SN3)	Enable	Inhibit	-
03	Enable SCA4 (SN4)	Enable	Inhibit	-
04	Enable SCA5 (SN5)	Enable	Inhibit	-
05	Enable SCA6 (SN6)	Enable	Inhibit	-
06	Enable SCA7 (SN7)	Enable	Inhibit	-
07	Enable SCA8 (SN8)	Enable	Inhibit	-
08	Enable SCA9 (SN9)	Enable	Inhibit	-
09	Enable SCA10 (SN10)	Enable	Inhibit	-
10	Enable SCA11 (SN11)	Enable	Inhibit	-

11	Enable SCA12 (SN12)	Enable	Inhibit	-
12	Enable SCA13 (SN13)	Enable	Inhibit	-
13	Enable SCA14 (SN14)	Enable	Inhibit	-
14	Enable SCA15 (SN15)	Enable	Inhibit	-
15	Enable SCA16 (SN16)	Enable	Inhibit	-
16	Enable ESCA17 (SN17)	Enable	Inhibit	-
17	Enable SCA18 (SN18)	Enable	Inhibit	-
18	Enable SCA19 (SN19)	Enable	Inhibit	-
19	Enable SCA20 (SN20)	Enable	Inhibit	-
20	Enable SCA21 (SN21)	Enable	Inhibit	-
21	Enable SCA22 (SN22)	Enable	Inhibit	-
22	Enable SCA23 (SN23)	Enable	Inhibit	-
23	Enable SCA24 (SN24)	Enable	Inhibit	-
24	Enable SCA25 (SN25)	Enable	Inhibit	-
25	Enable SCA26 (SN26)	Enable	Inhibit	-
26	Enable SCA27 (SN27)	Enable	Inhibit	-
27	Enable SCA28 (SN28)	Enable	Inhibit	-
28	Enable SCA29 (SN29)	Enable	Inhibit	-
29	Enable SCA30 (SN30)	Enable	Inhibit	-

Dependency: Refer to: p9501
Refer to: F01686

Note: The "Safe Cam" function (SCA) can either be enabled using p9501 or p9503.
SCA: Safe Cam / SN: Safe software cam

p9505 SI Motion SCA (SN) modulo value (Control Unit) / SI Mtn SCA modulo

SERVO_S110-DP, SERVO_S110-CAN, SERVO_S110-PN

Can be changed: U, T	**Calculated:** -	**Access level:** 4
Data type: FloatingPoint32	**Dyn. index:** -	**Func. diagram:** -
P-Group: Safety Integrated	**Unit group:** -	**Unit selection:** -
Not for motor type: -	**Scaling:** -	**Expert list:** 1
Min	**Max**	**Factory setting**
0 [°]	737280 [°]	0 [°]

Description: Sets the modulo range of the safe position actual value in degrees for the function "Safe Cam" (SCA) for rotary axes.

Dependency: Refer to: p9536, p9537

Note: SCA: Safe Cam / SN: Safe software cam

p9506 SI Motion function specification (processor 1) / SI Mtn fct_spc P1

SERVO_S110-DP, SERVO_S110-CAN, SERVO_S110-PN

Can be changed: C2(95)	**Calculated:** -	**Access level:** 3
Data type: Integer16	**Dyn. index:** -	**Func. diagram:** -
P-Group: Safety Integrated	**Unit group:** -	**Unit selection:** -
Not for motor type: -	**Scaling:** -	**Expert list:** 1
Min	**Max**	**Factory setting**
0	3	0

Description: Sets the function specification for the safe motion monitoring.

Value:
0: Safety with encoder
1: Safety without encoder
3: Safety without encoder with accel_monitoring/delay time

Dependency: Refer to: C01711

p9507 SI Motion function configuration (processor 1) / SI Mtn config P1

SERVO_S110-DP, SERVO_S110-CAN, SERVO_S110-PN

Can be changed: C2(95)	**Calculated:** -	**Access level:** 3
Data type: Unsigned32	**Dyn. index:** -	**Func. diagram:** -
P-Group: Safety Integrated	**Unit group:** -	**Unit selection:** -
Not for motor type: -	**Scaling:** -	**Expert list:** 1
Min	**Max**	**Factory setting**
-	-	0000 bin

Description: Sets the function configuration for the safe motion monitoring functions.

Bit field:	Bit	Signal name	1 signal	0 signal	FP
	00	Extended message acknowledgement	Yes	No	-
	01	Setpoint velocity limit for STOP F	No	Yes	-
	02	Motor type sensorless actual value sensing	Synchronous motor	Induction motor	-

Dependency: Refer to: C01711

Note: Re bit 00:

When the function is activated, a safety-relevant acknowledgement (internal event acknowledge) can be performed by selecting/deselecting STO.

Re bit 01:

When the function is activated, the active setpoint velocity limit (CO: r9733) is set to zero when STOP F is active.

Re bit 02:

This bit defines the type of motor, which the sensorless safety technology evaluates.

For bit = 0, the sensorless motion monitoring function calculates the actual velocity for an induction motor.

For bit = 1, an actual velocity is calculated for a synchronous motor. This value depends on the setting in p0300.

Bit = 0 should be set if no motor is defined (p0300 = 0).

p9509 SI Motion behavior during pulse suppression (processor 1) / SI Mtn behav IL P1

SERVO_S110-DP, SERVO_S110-CAN, SERVO_S110-PN

Can be changed: C2(95)	**Calculated:** -	**Access level:** 3
Data type: Unsigned32	**Dyn. index:** -	**Func. diagram:** -
P-Group: Safety Integrated	**Unit group:** -	**Unit selection:** -
Not for motor type: -	**Scaling:** -	**Expert list:** 1
Min	**Max**	**Factory setting**
-	-	0000 0000 1111 1111 bin

Description: Sets the behavior of safety functions and their feedback during pulse suppression in encoderless operation.

Bit field:	Bit	Signal name	1 signal	0 signal	FP
	00	SSM during pulse suppression and sensorless	Becomes inactive	Remains active	-
	08	SDI during pulse suppression and sensorless	Becomes inactive	Remains active	-

Dependency: Refer to: C01711

Note: SDI: Safe Direction (safe motion direction)

SSM: Safe Speed Monitor (safety-relevant feedback signal from the velocity monitoring)

Re bit 00:

For bit = 1 and with the SSM safety function activated, the following applies:

- During pulse suppression, monitoring is switched off and the feedback signal has a 0 signal level.

For bit = 0 and with the SSM safety function activated, the following applies:

- Monitoring continues during pulse suppression. The feedback signal last displayed before pulse suppression is kept and the system goes into the STO state.

Re bit 08:

For bit = 1 and with the SDI safety function activated, the following applies:

- During pulse suppression, monitoring is switched off and the status signal indicates inactive.

For bit = 0 and with the SDI safety function activated, the following applies:

- Monitoring continues during pulse suppression. The status signal indicates active and the system goes into the STO state.

p9510 SI Motion clock-cycle synchronous PROFIBUS master / SI Mtn sync master

SERVO_S110-DP, SERVO_S110-CAN, SERVO_S110-PN

Can be changed: C2(95)	**Calculated:** -	**Access level:** 4
Data type: Integer16	**Dyn. index:** -	**Func. diagram:** -
P-Group: Safety Integrated	**Unit group:** -	**Unit selection:** -
Not for motor type: -	**Scaling:** -	**Expert list:** 1
Min	**Max**	**Factory setting**
0	1	0

Description: Setting for clock cycle synchronous communication between PROFIdrive controller and Control Unit.

The parameter is only relevant, if the safety-relevant motion monitoring functions integrated in the drive have been enabled (p9601.2 =1).

If a PROFIdrive controller exchanges process data in clock cycle synchronism with the Control Unit, then p9510 must be set to 1. This also applies if the drive itself does not exchange process data in clock cycle synchronism.

Examples for clock cycle synchronous communication:

- clock-cycle synchronous control for the motion control (e.g. SIMOTION).
- clock-cycle synchronous PROFIsafe master (e.g. SIMATIC S7-400F).

Value:
0: Communication not isochronous
1: Communication isochronous

Dependency: Refer to: C01711, A01796

Notice: As of firmware version 2.6, the parameter has no effect.

p9511 SI Motion actual value sensing clock cycle (processor 1) / SI Mtn act clk P1

SERVO_S110-DP, SERVO_S110-CAN, SERVO_S110-PN

Can be changed: C2(95)	**Calculated:** -	**Access level:** 3
Data type: FloatingPoint32	**Dyn. index:** -	**Func. diagram:** -
P-Group: Safety Integrated	**Unit group:** -	**Unit selection:** -
Not for motor type: -	**Scaling:** -	**Expert list:** 1
Min	**Max**	**Factory setting**
0.2500 [ms]	8.0000 [ms]	2.0000 [ms]

Description: Sets the clock cycle time of the actual value sensing for safe motion monitoring.

Setting criteria if the motion monitoring functions are executed with an encoder.

- A slower clock cycle time reduces the maximum permissible velocity - however, it ensures a lower load of the Control Unit for safe actual value sensing.
- The maximum permissible velocity which, when exceeded, can mean that errors occur during safe actual value sensing, is displayed in r9730.
- Setting criteria if the motion monitoring functions are executed without an encoder:
- The actual value sensing clock cycle must be set to the same value as the current controller clock cycle (p0115).

Dependency: Refer to: p0115

Refer to: F01652

Note: The parameter is only active for drive-based motion monitoring functions (p9601.2 = 1).

The monitoring clock cycle from p9500 must be an integer multiple of this parameter.

In the case of motion monitoring functions with encoder, the clock cycle time for actual value sensing must be an integer multiple of the current controller clock cycle and at least 4 times slower than the current controller clock cycle. A factor of at least 8 is recommended. The value for the parameter must also be greater than or equal to 2 ms.

A change only becomes effective after a POWER ON.

p9515 SI Motion encoder coarse pos. val. configuration (processor 1) / SI Mtn s config P1

SERVO_S110-DP, SERVO_S110-CAN, SERVO_S110-PN

Can be changed: C2(95)	**Calculated:** -	**Access level:** 3
Data type: Unsigned32	**Dyn. index:** -	**Func. diagram:** -
P-Group: Safety Integrated	**Unit group:** -	**Unit selection:** -
Not for motor type: -	**Scaling:** -	**Expert list:** 1
Min	**Max**	**Factory setting**
-	-	0000 0000 0000 0000 0000 0000 0000 0000 bin

Description: Sets the encoder configuration for the redundant coarse position value.

The encoder that is used for the safe motion monitoring functions on processor 1 must be parameterized in this parameter.

Bit field:

Bit	Signal name	1 signal	0 signal	FP
00	Incrementer	Yes	No	-
01	Encoder CRC least significant byte first	Yes	No	-
02	Redundant coarse position val. most significant bit left-aligned	Yes	No	-
16	DRIVE-CLiQ encoder	Yes	No	-

Dependency: Refer to: r0474, p9315

Note: For safe functions that are not enabled (p9501 = 0), the following applies:

- p9515 is automatically set the same as p0474 when the system boots.

For safety functions that are enabled (p9501 > 0), the following applies:

- p9515 is checked to see that it matches p0474.

p9516 SI Motion encoder configuration safety functions (processor 1) / SI Mtn enc_cfg P1

SERVO_S110-DP, SERVO_S110-CAN, SERVO_S110-PN

Can be changed: C2(95)	**Calculated:** -	**Access level:** 3
Data type: Unsigned16	**Dyn. index:** -	**Func. diagram:** -
P-Group: Safety Integrated	**Unit group:** -	**Unit selection:** -
Not for motor type: -	**Scaling:** -	**Expert list:** 1
Min	**Max**	**Factory setting**
-	-	0000 bin

Description: Sets the configuration for the motor encoder and position actual value.

The encoder that is used for the safe motion monitoring functions on processor 1 must be parameterized in this parameter.

Bit field:

Bit	Signal name	1 signal	0 signal	FP
00	Motor encoder rotating/linear	Linear	Rotating	-
01	Position actual value sign change	Yes	No	-

Dependency: Refer to: p0404, p0410

Refer to: F01671

Note: For safe functions that are not enabled (p9501 = 0), the following applies:

- p9516.0 is automatically set the same as p0404.0 when the system boots.
- p9516.1 is automatically set the same as p0410.1 when the system boots.

For safety functions that are enabled (p9501 > 0), the following applies:

- p9516.1 is checked to identify whether it coincides with p0410.1.

p9517 SI Motion linear scale grid division (processor 1) / SI Mtn grid P1

SERVO_S110-DP, SERVO_S110-CAN, SERVO_S110-PN

Can be changed: C2(95)	**Calculated:** -	**Access level:** 3
Data type: FloatingPoint32	**Dyn. index:** -	**Func. diagram:** -
P-Group: Safety Integrated	**Unit group:** -	**Unit selection:** -
Not for motor type: -	**Scaling:** -	**Expert list:** 1
Min	**Max**	**Factory setting**
0.00 [nm]	250000000.00 [nm]	10000.00 [nm]

Description: Sets the grid division for a linear motor encoder.

The encoder that is used for the safe motion monitoring functions on processor 1 must be parameterized in this parameter.

Dependency: Refer to: p9516

Refer to: F01671

Note: For safety functions that have not been enabled (p9501 = 0), the following applies: When booting p9517 is automatically set the same as p0407.

For safety functions that are enabled (p9501 > 0), the following applies: p9517 is checked whether it coincides with p0407.

p9518 SI motion encoder pulses per revolution (processor 1) / SI Mtn puls/rev P1

SERVO_S110-DP, SERVO_S110-CAN, SERVO_S110-PN

Can be changed: C2(95)	**Calculated:** -	**Access level:** 3
Data type: Unsigned32	**Dyn. index:** -	**Func. diagram:** -
P-Group: Safety Integrated	**Unit group:** -	**Unit selection:** -
Not for motor type: -	**Scaling:** -	**Expert list:** 1
Min	**Max**	**Factory setting**
0	16777215	2048

Description: Sets the number of encoder pulses per revolution for rotary motor encoders.

The encoder that is used for the safe motion monitoring functions on processor 1 must be parameterized in this parameter.

Dependency: Refer to: p0408, p9516

Refer to: F01671

Note: For safety functions that have not been enabled (p9501 = 0), the following applies: When booting, p9518 is automatically set the same as p0408.

For safety functions that are enabled (p9501 > 0), the following applies: p9518 is checked whether it coincides with p0408.

p9519 SI Motion fine resolution G1_XIST1 (processor 1) / SI Mtn G1_XIST1 P1

SERVO_S110-DP, SERVO_S110-CAN, SERVO_S110-PN

Can be changed: C2(95)	**Calculated:** -	**Access level:** 3
Data type: Unsigned32	**Dyn. index:** -	**Func. diagram:** -
P-Group: Safety Integrated	**Unit group:** -	**Unit selection:** -
Not for motor type: -	**Scaling:** -	**Expert list:** 1
Min	**Max**	**Factory setting**
2	18	11

Description: Sets the fine resolution for G1_XIST1 in bits.
The encoder that is used for the safe motion monitoring functions on processor 1 must be parameterized in this parameter.

Dependency: Refer to: p0418
Refer to: F01671

Note: For safety functions that have not been enabled (p9501 = 0), the following applies: When booting, p9519 is automatically set the same as p0418.
For safety functions that are enabled (p9501 > 0), the following applies: p9519 is checked whether it coincides with p0418.
G1_XIST1: Encoder 1 position actual value 1 (PROFIdrive)

p9520 SI Motion spindle pitch (processor 1) / SI Mtn Sp_pitch P1

SERVO_S110-DP, SERVO_S110-CAN, SERVO_S110-PN

Can be changed: C2(95)	**Calculated:** -	**Access level:** 3
Data type: FloatingPoint32	**Dyn. index:** -	**Func. diagram:** -
P-Group: Safety Integrated	**Unit group:** -	**Unit selection:** -
Not for motor type: -	**Scaling:** -	**Expert list:** 1
Min	**Max**	**Factory setting**
0.1000 [mm]	8388.0000 [mm]	10.0000 [mm]

Description: Sets the gear ratio between the encoder and load in mm/revolution for a linear axis with rotary encoder.

Notice: The fourth decimal point can be rounded-off depending on the size of the entered number (from 3 places before the decimal point).

p9521[0...7] SI Motion gearbox enc (motor)/load denominator (processor 1) / SI Mtn gear den P1

SERVO_S110-DP, SERVO_S110-CAN, SERVO_S110-PN

Can be changed: C2(95)	**Calculated:** -	**Access level:** 3
Data type: Unsigned32	**Dyn. index:** -	**Func. diagram:** -
P-Group: Safety Integrated	**Unit group:** -	**Unit selection:** -
Not for motor type: -	**Scaling:** -	**Expert list:** 1
Min	**Max**	**Factory setting**
1	2147000000	1

Description: Sets the denominator for the gearbox between the encoder (or motor in the case of encoderless monitoring functions) and the load.

Index: [0] = Gearbox 1
[1] = Gearbox 2
[2] = Gearbox 3
[3] = Gearbox 4
[4] = Gearbox 5
[5] = Gearbox 6
[6] = Gearbox 7
[7] = Gearbox 8

Dependency: Refer to: p9522

Notice: It is not possible to change over the gearbox stages. Gearbox 1 (index 0) is always active.

p9522[0...7] SI Motion gearbox enc (motor)/load numerator (processor 1) / SI Mtn gear num P1

SERVO_S110-DP, SERVO_S110-CAN, SERVO_S110-PN

Can be changed: C2(95)	**Calculated:** -	**Access level:** 3
Data type: Unsigned32	**Dyn. index:** -	**Func. diagram:** -
P-Group: Safety Integrated	**Unit group:** -	**Unit selection:** -
Not for motor type: -	**Scaling:** -	**Expert list:** 1
Min	**Max**	**Factory setting**
1	2147000000	1

Description: Sets the numerator for the gearbox between the encoder (or motor in the case of encoderless monitoring functions) and the load.

Index:
[0] = Gearbox 1
[1] = Gearbox 2
[2] = Gearbox 3
[3] = Gearbox 4
[4] = Gearbox 5
[5] = Gearbox 6
[6] = Gearbox 7
[7] = Gearbox 8

Dependency: Refer to: p9521

Notice: It is not possible to change over the gearbox stages. Gearbox 1 (index 0) is always active.

Note: In the case of encoderless monitoring functions, the pole pair number must be multiplied by the numerator of the gearbox ratio.

Example:

Gearbox ratio 1:4, pole pair number (r0313) = 2

--> p9521 = 1, p9522 = 8 (4 x 2)

p9523 SI Motion red. coarse position value valid bits (processor 1) / Valid bits P1

SERVO_S110-DP, SERVO_S110-CAN, SERVO_S110-PN

Can be changed: C2(95)	**Calculated:** -	**Access level:** 3
Data type: Unsigned16	**Dyn. index:** -	**Func. diagram:** -
P-Group: Safety Integrated	**Unit group:** -	**Unit selection:** -
Not for motor type: -	**Scaling:** -	**Expert list:** 1
Min	**Max**	**Factory setting**
0	16	9

Description: Sets the number of valid bits of the redundant coarse position value.

The encoder that is used for the safe motion monitoring functions on processor 1 must be parameterized in this parameter.

Dependency: Refer to: r0470, p9323

Note: For safe functions that are not enabled (p9501 = 0), the following applies:

- p9523 is automatically set the same as r0470 when the system boots.

For safety functions that are enabled (p9501 > 0), the following applies:

- p9523 is checked to see that it matches r0470.

p9524 SI Motion Redundant coarse pos. value fine resolution bits (P1) / SI Mtn fine bit P1

SERVO_S110-DP, SERVO_S110-CAN, SERVO_S110-PN

Can be changed: C2(95)	**Calculated:** -	**Access level:** 3
Data type: Integer16	**Dyn. index:** -	**Func. diagram:** -
P-Group: Safety Integrated	**Unit group:** -	**Unit selection:** -
Not for motor type: -	**Scaling:** -	**Expert list:** 1
Min	**Max**	**Factory setting**
-16	16	-2

Description: Sets the number of valid bits for the fine resolution of the redundant coarse position value.

The encoder that is used for the safe motion monitoring functions on processor 1 must be parameterized in this parameter.

Dependency: Refer to: r0471, p9324

Note: For safe functions that are not enabled (p9501 = 0), the following applies:
- p9524 is automatically set the same as r0471 when the system boots.
For safety functions that are enabled (p9501 > 0), the following applies:
- p9524 is checked to see that it matches r0471.

p9525 SI Motion Redundant coarse pos. value relevant bits (P1) / Relevant bits P1

SERVO_S110-DP, SERVO_S110-CAN, SERVO_S110-PN

Can be changed: C2(95)	**Calculated:** -	**Access level:** 3
Data type: Unsigned16	**Dyn. index:** -	**Func. diagram:** -
P-Group: Safety Integrated	**Unit group:** -	**Unit selection:** -
Not for motor type: -	**Scaling:** -	**Expert list:** 1
Min	**Max**	**Factory setting**
0	16	16

Description: Sets the number of relevant bits for the redundant coarse position value.
The encoder that is used for the safe motion monitoring functions on processor 1 must be parameterized in this parameter.

Dependency: Refer to: p0414, r0472, p9325

Note: For safe functions that are not enabled (p9501 = 0), the following applies:
- p9525 is automatically set the same as r0472 when the system boots.
For safety functions that are enabled (p9501 > 0), the following applies:
- p9525 is checked to see that it matches r0472.

p9529 SI Motion Gx_XIST1 coarse pos. safe most significant bit (P1) / Gx_XIST1 MSB P1

SERVO_S110-DP, SERVO_S110-CAN, SERVO_S110-PN

Can be changed: C2(95)	**Calculated:** -	**Access level:** 3
Data type: Unsigned16	**Dyn. index:** -	**Func. diagram:** -
P-Group: Safety Integrated	**Unit group:** -	**Unit selection:** -
Not for motor type: -	**Scaling:** -	**Expert list:** 1
Min	**Max**	**Factory setting**
0	31	14

Description: Sets the bit number for the safe most significant bit (MSB) of the Gx_XIST1 coarse position.
The encoder that is used for the safe motion monitoring functions on processor 1 must be parameterized in this parameter.

Dependency: Refer to: p0415, r0475, p9329

Note: For safe functions that are not enabled (p9501 = 0), the following applies:
- p9529 is automatically set the same as r0475 when the system boots.
For safety functions that are enabled (p9501 > 0), the following applies:
- p9529 is checked to see that it matches r0475.
MSB: Most Significant Bit

p9530 SI Motion standstill tolerance (processor 1) / SI Mtn standst_tol

SERVO_S110-DP, SERVO_S110-CAN, SERVO_S110-PN

Can be changed: C2(95)	**Calculated:** -	**Access level:** 3
Data type: FloatingPoint32	**Dyn. index:** -	**Func. diagram:** -
P-Group: Safety Integrated	**Unit group:** -	**Unit selection:** -
Not for motor type: -	**Scaling:** -	**Expert list:** 1
Min	**Max**	**Factory setting**
0.000 [mm]	100.000 [mm]	1.000 [mm]

Description: Sets the tolerance for the function "Safe Operating Stop" (SOS).

Dependency: Refer to: C01707

Note: SOS: Safe Operating Stop

p9530 SI Motion standstill tolerance (processor 1) / SI Mtn standst_tol

SERVO_S110-DP (Safety rot), SERVO_S110-CAN (Safety rot), SERVO_S110-PN (Safety rot)

Can be changed: C2(95)	**Calculated:** -	**Access level:** 3
Data type: FloatingPoint32	**Dyn. index:** -	**Func. diagram:** -
P-Group: Safety Integrated	**Unit group:** -	**Unit selection:** -
Not for motor type: -	**Scaling:** -	**Expert list:** 1
Min	**Max**	**Factory setting**
0.000 [°]	100.000 [°]	1.000 [°]

Description: Sets the tolerance for the function "Safe Operating Stop" (SOS).

Dependency: Refer to: C01707

Note: SOS: Safe Operating Stop

p9531[0...3] SI Motion SLS limit values (processor 1) / SI Mtn SLS lim P1

SERVO_S110-DP, SERVO_S110-CAN, SERVO_S110-PN

Can be changed: C2(95)	**Calculated:** -	**Access level:** 3
Data type: FloatingPoint32	**Dyn. index:** -	**Func. diagram:** -
P-Group: Safety Integrated	**Unit group:** -	**Unit selection:** -
Not for motor type: -	**Scaling:** -	**Expert list:** 1
Min	**Max**	**Factory setting**
0.00 [mm/min]	1000000.00 [mm/min]	2000.00 [mm/min]

Description: Sets the limit values for the function "Safely-Limited Speed" (SLS).

Index: [0] = Limit value SLS1
[1] = Limit value SLS2
[2] = Limit value SLS3
[3] = Limit value SLS4

Dependency: Refer to: p9532, p9561, p9563
Refer to: C01714

Note: SLS: Safely-Limited Speed

p9531[0...3] SI Motion SLS limit values (processor 1) / SI Mtn SLS lim P1

SERVO_S110-DP (Safety rot), SERVO_S110-CAN (Safety rot), SERVO_S110-PN (Safety rot)

Can be changed: C2(95)	**Calculated:** -	**Access level:** 3
Data type: FloatingPoint32	**Dyn. index:** -	**Func. diagram:** -
P-Group: Safety Integrated	**Unit group:** -	**Unit selection:** -
Not for motor type: -	**Scaling:** -	**Expert list:** 1
Min	**Max**	**Factory setting**
0.00 [rpm]	1000000.00 [rpm]	2000.00 [rpm]

Description: Sets the limit values for the function "Safely-Limited Speed" (SLS).

Index: [0] = Limit value SLS1
[1] = Limit value SLS2
[2] = Limit value SLS3
[3] = Limit value SLS4

Dependency: Refer to: p9532, p9561, p9563
Refer to: C01714

Note: SLS: Safely-Limited Speed

p9532[0...15] SI Motion SLS override factor (processor 1) / SI Mtn SLS over P1

SERVO_S110-DP, SERVO_S110-CAN, SERVO_S110-PN

Can be changed: U, T	**Calculated:** -	**Access level:** 4
Data type: FloatingPoint32	**Dyn. index:** -	**Func. diagram:** -
P-Group: Safety Integrated	**Unit group:** -	**Unit selection:** -
Not for motor type: -	**Scaling:** -	**Expert list:** 1
Min	**Max**	**Factory setting**
0.000 [%]	100.000 [%]	100.000 [%]

Description: Sets the override factor for the limit value for SLS2 and SLS4 for the function "Safely-Limited Speed" (SLS).

Index: [0] = SLS (SG) override factor 0
[1] = SLS (SG) override factor 1
[2] = SLS (SG) override factor 2
[3] = SLS (SG) override factor 3
[4] = SLS (SG) override factor 4
[5] = SLS (SG) override factor 5
[6] = SLS (SG) override factor 6
[7] = SLS (SG) override factor 7
[8] = SLS (SG) override factor 8
[9] = SLS (SG) override factor 9
[10] = SLS (SG) override factor 10
[11] = SLS (SG) override factor 11
[12] = SLS (SG) override factor 12
[13] = SLS (SG) override factor 13
[14] = SLS (SG) override factor 14
[15] = SLS (SG) override factor 15

Dependency: Refer to: p9501, p9531

Note: The actual override factor for SLS2 and SLS4 is selected using the safety-relevant inputs (SGE).
SLS: Safely-Limited Speed

p9533 SI Motion SLS setpoint speed limit (processor 1) / SI Mtn SLS set_lim

SERVO_S110-DP, SERVO_S110-CAN, SERVO_S110-PN

Can be changed: U, T	**Calculated:** -	**Access level:** 3
Data type: FloatingPoint32	**Dyn. index:** -	**Func. diagram:** -
P-Group: Safety Integrated	**Unit group:** -	**Unit selection:** -
Not for motor type: -	**Scaling:** -	**Expert list:** 1
Min	**Max**	**Factory setting**
0.000 [%]	100.000 [%]	80.000 [%]

Description: This is an evaluation factor to define the setpoint limit from the selected actual speed limit.
The active SLS limit value is evaluated with this factor and is made available as setpoint limit in r9733.

Dependency: This parameter only has to be parameterized for the motion monitoring functions integrated in the drive (p9601.2 = 1)
r9733[0] = p9531[x] x p9533 (converted from the load side to the motor side)
r9733[1] = - p9531[x] x p9533 (converted from the load side to the motor side)
[x] = Selected SLS stage
Conversion factor from the motor side to the load side:
- motor type = rotary and axis type = linear: p9522 / (p9521 x p9520)
- otherwise: p9522 / p9521
Refer to: p9501, p9531, p9601

Note: The active actual speed limit is selected via safety-relevant inputs (SGE).
When selecting SOS or a STOP A ... D, setpoint 0 is specified in r9733.
SLS: Safely-Limited Speed

p9534[0...1] SI Motion SLP upper limit values (processor 1) / SI Mtn SLP up lim

SERVO_S110-DP, SERVO_S110-CAN, SERVO_S110-PN

Can be changed: U, T	**Calculated:** -	**Access level:** 4
Data type: FloatingPoint32	**Dyn. index:** -	**Func. diagram:** -
P-Group: Safety Integrated	**Unit group:** -	**Unit selection:** -
Not for motor type: -	**Scaling:** -	**Expert list:** 1
Min	**Max**	**Factory setting**
-2147000.000 [mm]	2147000.000 [mm]	100000.000 [mm]

Description: Sets the upper limit for the function "Safely-Limited Position" (SLP).

Index: [0] = Limit value SLP1 (SE1)
[1] = Limit value SLP2 (SE2)

Dependency: Refer to: p9501, p9535, p9562

Note: For the setting of these limit values, the following applies: p9534 > p9535
A change only becomes effective after a POWER ON.
SLP: Safely-Limited Position

p9534[0...1] SI Motion SLP upper limit values (processor 1) / SI Mtn SLP up lim

SERVO_S110-DP (Safety rot), SERVO_S110-CAN (Safety rot), SERVO_S110-PN (Safety rot)

Can be changed: U, T	**Calculated:** -	**Access level:** 4
Data type: FloatingPoint32	**Dyn. index:** -	**Func. diagram:** -
P-Group: Safety Integrated	**Unit group:** -	**Unit selection:** -
Not for motor type: -	**Scaling:** -	**Expert list:** 1
Min	**Max**	**Factory setting**
-2147000.000 [°]	2147000.000 [°]	100000.000 [°]

Description: Sets the upper limit for the function "Safely-Limited Position" (SLP).

Index: [0] = Limit value SLP1 (SE1)
[1] = Limit value SLP2 (SE2)

Dependency: Refer to: p9501, p9535, p9562

Note: For the setting of these limit values, the following applies: p9534 > p9535
A change only becomes effective after a POWER ON.
SLP: Safely-Limited Position

p9535[0...1] SI Motion SLP upper limit values (processor 1) / SI Mtn SLP low lim

SERVO_S110-DP, SERVO_S110-CAN, SERVO_S110-PN

Can be changed: U, T	**Calculated:** -	**Access level:** 4
Data type: FloatingPoint32	**Dyn. index:** -	**Func. diagram:** -
P-Group: Safety Integrated	**Unit group:** -	**Unit selection:** -
Not for motor type: -	**Scaling:** -	**Expert list:** 1
Min	**Max**	**Factory setting**
-2147000.000 [mm]	2147000.000 [mm]	-100000.000 [mm]

Description: Sets the lower limit for the function "Safely-Limited Position" (SLP).

Index: [0] = Limit value SLP1 (SE1)
[1] = Limit value SLP2 (SE2)

Dependency: Refer to: p9501, p9534, p9562

Note: For the setting of these limit values, the following applies: p9534 > p9535
A change only becomes effective after a POWER ON.
SLP: Safely-Limited Position

p9535[0...1] SI Motion SLP upper limit values (processor 1) / SI Mtn SLP low lim

SERVO_S110-DP (Safety rot), SERVO_S110-CAN (Safety rot), SERVO_S110-PN (Safety rot)

Can be changed: U, T	**Calculated:** -	**Access level:** 4
Data type: FloatingPoint32	**Dyn. index:** -	**Func. diagram:** -
P-Group: Safety Integrated	**Unit group:** -	**Unit selection:** -
Not for motor type: -	**Scaling:** -	**Expert list:** 1
Min	**Max**	**Factory setting**
-2147000.000 [°]	2147000.000 [°]	-100000.000 [°]

Description: Sets the lower limit for the function "Safely-Limited Position" (SLP).

Index: [0] = Limit value SLP1 (SE1)
[1] = Limit value SLP2 (SE2)

Dependency: Refer to: p9501, p9534, p9562

Note: For the setting of these limit values, the following applies: p9534 > p9535
A change only becomes effective after a POWER ON.
SLP: Safely-Limited Position

p9536[0...29] SI Motion SCA plus cam position (processor 1) / SI Mtn SCA+

SERVO_S110-DP, SERVO_S110-CAN, SERVO_S110-PN

Can be changed: U, T	**Calculated:** -	**Access level:** 4
Data type: FloatingPoint32	**Dyn. index:** -	**Func. diagram:** -
P-Group: Safety Integrated	**Unit group:** -	**Unit selection:** -
Not for motor type: -	**Scaling:** -	**Expert list:** 1
Min	**Max**	**Factory setting**
-2147000.000 [mm]	2147000.000 [mm]	10.000 [mm]

Description: Sets the plus cam position for the function "Safe Cam" (SCA).

Index:
[0] = Cam position SCA1 (SN1)
[1] = Cam position SCA2 (SN2)
[2] = Cam position SCA3 (SN3)
[3] = Cam position SCA4 (SN4)
[4] = Cam position SCA5 (SN5)
[5] = Cam position SCA6 (SN6)
[6] = Cam position SCA7 (SN7)
[7] = Cam position SCA8 (SN8)
[8] = Cam position SCA9 (SN9)
[9] = Cam position SCA10 (SN10)
[10] = Cam position SCA11 (SN11)
[11] = Cam position SCA12 (SN12)
[12] = Cam position SCA13 (SN13)
[13] = Cam position SCA14 (SN14)
[14] = Cam position SCA15 (SN15)
[15] = Cam position SCA16 (SN16)
[16] = Cam position SCA17 (SN17)
[17] = Cam position SCA18 (SN18)
[18] = Cam position SCA19 (SN19)
[19] = Cam position SCA20 (SN20)
[20] = Cam position SCA21 (SN21)
[21] = Cam position SCA22 (SN22)
[22] = Cam position SCA23 (SN23)
[23] = Cam position SCA24 (SN24)
[24] = Cam position SCA25 (SN25)
[25] = Cam position SCA26 (SN26)
[26] = Cam position SCA27 (SN27)
[27] = Cam position SCA28 (SN28)
[28] = Cam position SCA29 (SN29)
[29] = Cam position SCA30 (SN30)

Dependency: Refer to: p9501, p9503, p9537

Note: A change only becomes effective after a POWER ON.
SCA: Safe Cam

p9536[0...29] SI Motion SCA plus cam position (processor 1) / SI Mtn SCA+

SERVO_S110-DP (Safety rot), SERVO_S110-CAN (Safety rot), SERVO_S110-PN (Safety rot)

Can be changed: U, T	**Calculated:** -	**Access level:** 4
Data type: FloatingPoint32	**Dyn. index:** -	**Func. diagram:** -
P-Group: Safety Integrated	**Unit group:** -	**Unit selection:** -
Not for motor type: -	**Scaling:** -	**Expert list:** 1
Min	**Max**	**Factory setting**
-2147000.000 [°]	2147000.000 [°]	10.000 [°]

Description: Sets the plus cam position for the function "Safe Cam" (SCA).

Index:
[0] = Cam position SCA1 (SN1)
[1] = Cam position SCA2 (SN2)
[2] = Cam position SCA3 (SN3)
[3] = Cam position SCA4 (SN4)
[4] = Cam position SCA5 (SN5)
[5] = Cam position SCA6 (SN6)
[6] = Cam position SCA7 (SN7)
[7] = Cam position SCA8 (SN8)
[8] = Cam position SCA9 (SN9)

[9] = Cam position SCA10 (SN10)
[10] = Cam position SCA11 (SN11)
[11] = Cam position SCA12 (SN12)
[12] = Cam position SCA13 (SN13)
[13] = Cam position SCA14 (SN14)
[14] = Cam position SCA15 (SN15)
[15] = Cam position SCA16 (SN16)
[16] = Cam position SCA17 (SN17)
[17] = Cam position SCA18 (SN18)
[18] = Cam position SCA19 (SN19)
[19] = Cam position SCA20 (SN20)
[20] = Cam position SCA21 (SN21)
[21] = Cam position SCA22 (SN22)
[22] = Cam position SCA23 (SN23)
[23] = Cam position SCA24 (SN24)
[24] = Cam position SCA25 (SN25)
[25] = Cam position SCA26 (SN26)
[26] = Cam position SCA27 (SN27)
[27] = Cam position SCA28 (SN28)
[28] = Cam position SCA29 (SN29)
[29] = Cam position SCA30 (SN30)

Dependency: Refer to: p9501, p9503, p9537

Note: A change only becomes effective after a POWER ON.
SCA: Safe Cam

p9537[0...29] SI Motion SCA minus cam position (processor 1) / SI Mtn SCA-

SERVO_S110-DP, SERVO_S110-CAN, SERVO_S110-PN

Can be changed: U, T	**Calculated:** -	**Access level:** 4
Data type: FloatingPoint32	**Dyn. index:** -	**Func. diagram:** -
P-Group: Safety Integrated	**Unit group:** -	**Unit selection:** -
Not for motor type: -	**Scaling:** -	**Expert list:** 1
Min	**Max**	**Factory setting**
-2147000.000 [mm]	2147000.000 [mm]	-10.000 [mm]

Description: Sets the minus cam position for the function "Safe Cam" (SCA).

Index: [0] = Cam position SCA1 (SN1)
[1] = Cam position SCA2 (SN2)
[2] = Cam position SCA3 (SN3)
[3] = Cam position SCA4 (SN4)
[4] = Cam position SCA5 (SN5)
[5] = Cam position SCA6 (SN6)
[6] = Cam position SCA7 (SN7)
[7] = Cam position SCA8 (SN8)
[8] = Cam position SCA9 (SN9)
[9] = Cam position SCA10 (SN10)
[10] = Cam position SCA11 (SN11)
[11] = Cam position SCA12 (SN12)
[12] = Cam position SCA13 (SN13)
[13] = Cam position SCA14 (SN14)
[14] = Cam position SCA15 (SN15)
[15] = Cam position SCA16 (SN16)
[16] = Cam position SCA17 (SN17)
[17] = Cam position SCA18 (SN18)
[18] = Cam position SCA19 (SN19)
[19] = Cam position SCA20 (SN20)
[20] = Cam position SCA21 (SN21)
[21] = Cam position SCA22 (SN22)
[22] = Cam position SCA23 (SN23)
[23] = Cam position SCA24 (SN24)
[24] = Cam position SCA25 (SN25)
[25] = Cam position SCA26 (SN26)
[26] = Cam position SCA27 (SN27)
[27] = Cam position SCA28 (SN28)
[28] = Cam position SCA29 (SN29)
[29] = Cam position SCA30 (SN30)

Dependency: Refer to: p9501, p9503, p9536
Note: A change only becomes effective after a POWER ON.
SCA: Safe Cam

p9537[0...29] SI Motion SCA minus cam position (processor 1) / SI Mtn SCA-

SERVO_S110-DP (Safety rot), SERVO_S110-CAN (Safety rot), SERVO_S110-PN (Safety rot)

Can be changed: U, T	**Calculated:** -	**Access level:** 4
Data type: FloatingPoint32	**Dyn. index:** -	**Func. diagram:** -
P-Group: Safety Integrated	**Unit group:** -	**Unit selection:** -
Not for motor type: -	**Scaling:** -	**Expert list:** 1
Min	**Max**	**Factory setting**
-2147000.000 [°]	2147000.000 [°]	-10.000 [°]

Description: Sets the minus cam position for the function "Safe Cam" (SCA).
Index:
[0] = Cam position SCA1 (SN1)
[1] = Cam position SCA2 (SN2)
[2] = Cam position SCA3 (SN3)
[3] = Cam position SCA4 (SN4)
[4] = Cam position SCA5 (SN5)
[5] = Cam position SCA6 (SN6)
[6] = Cam position SCA7 (SN7)
[7] = Cam position SCA8 (SN8)
[8] = Cam position SCA9 (SN9)
[9] = Cam position SCA10 (SN10)
[10] = Cam position SCA11 (SN11)
[11] = Cam position SCA12 (SN12)
[12] = Cam position SCA13 (SN13)
[13] = Cam position SCA14 (SN14)
[14] = Cam position SCA15 (SN15)
[15] = Cam position SCA16 (SN16)
[16] = Cam position SCA17 (SN17)
[17] = Cam position SCA18 (SN18)
[18] = Cam position SCA19 (SN19)
[19] = Cam position SCA20 (SN20)
[20] = Cam position SCA21 (SN21)
[21] = Cam position SCA22 (SN22)
[22] = Cam position SCA23 (SN23)
[23] = Cam position SCA24 (SN24)
[24] = Cam position SCA25 (SN25)
[25] = Cam position SCA26 (SN26)
[26] = Cam position SCA27 (SN27)
[27] = Cam position SCA28 (SN28)
[28] = Cam position SCA29 (SN29)
[29] = Cam position SCA30 (SN30)
Dependency: Refer to: p9501, p9503, p9536
Note: A change only becomes effective after a POWER ON.
SCA: Safe Cam

p9538[0...29] SI Motion SCA cam track assignment (processor 1) / SI Mtn SCA assign.

SERVO_S110-DP, SERVO_S110-CAN, SERVO_S110-PN

Can be changed: U, T	**Calculated:** -	**Access level:** 4
Data type: Unsigned32	**Dyn. index:** -	**Func. diagram:** -
P-Group: Safety Integrated	**Unit group:** -	**Unit selection:** -
Not for motor type: -	**Scaling:** -	**Expert list:** 1
Min	**Max**	**Factory setting**
100	414	[0] 100 [1] 101 [2] 102 [3] 103 [4] 104 [5] 105 [6] 106 [7] 107 [8] 108 [9] 109 [10] 110 [11] 111 [12] 112 [13] 113 [14] 114 [15] 200 [16] 201 [17] 202 [18] 203 [19] 204 [20] 205 [21] 206 [22] 207 [23] 208 [24] 209 [25] 210 [26] 211 [27] 212 [28] 213 [29] 214

Description:

Assigns the individual cams to the maximum of 4 cam tracks and defines the numerical value for the SGA "cam range".

p9538[0...29] = CBA dec

C = Assignment of the cam to the cam track.

Valid values are 1, 2, 3, 4.

BA = Numerical value for the SGA "cam range".

If the position lies in the range of this cam, the value BA is signaled to the safety-relevant logic via the SGA "cam range" of the cam track set using C.

Valid values are 0 ... 14. Each numerical value may only be used once for each cam track.

Examples:

p9538[0] = 207

Cam 1 (index 0) is assigned cam track 2. If the position lies within the range of this cam, a value of 7 is entered in the SGA "cam range" of the second cam track.

p9538[5] = 100

Cam 6 (index 5) is assigned cam track 1. If the position lies within the range of this cam, a value of 0 is entered in the SGA "cam range" of the first cam track.

Index: [0] = Track assignment SCA1
[1] = Track assignment SCA2
[2] = Track assignment SCA3
[3] = Track assignment SCA4
[4] = Track assignment SCA5
[5] = Track assignment SCA6
[6] = Track assignment SCA7
[7] = Track assignment SCA8
[8] = Track assignment SCA9
[9] = Track assignment SCA10
[10] = Track assignment SCA11
[11] = Track assignment SCA12
[12] = Track assignment SCA13
[13] = Track assignment SCA14
[14] = Track assignment SCA15
[15] = Track assignment SCA16
[16] = Track assignment SCA17
[17] = Track assignment SCA18
[18] = Track assignment SCA19
[19] = Track assignment SCA20
[20] = Track assignment SCA21
[21] = Track assignment SCA22
[22] = Track assignment SCA23
[23] = Track assignment SCA24
[24] = Track assignment SCA25
[25] = Track assignment SCA26
[26] = Track assignment SCA27
[27] = Track assignment SCA28
[28] = Track assignment SCA29
[29] = Track assignment SCA30

Dependency: Refer to: p9501, p9503
Refer to: F01681

Note: A change only becomes effective after a POWER ON.
SCA: Safe Cam

p9540 SI Motion SCA tolerance (processor 1) / SI Mtn SCA tol P1

SERVO_S110-DP, SERVO_S110-CAN, SERVO_S110-PN

Can be changed: U, T	**Calculated:** -	**Access level:** 4
Data type: FloatingPoint32	**Dyn. index:** -	**Func. diagram:** -
P-Group: Safety Integrated	**Unit group:** -	**Unit selection:** -
Not for motor type: -	**Scaling:** -	**Expert list:** 1
Min	**Max**	**Factory setting**
0.0010 [mm]	10.0000 [mm]	0.1000 [mm]

Description: Sets the tolerance for the function "Safe Cam" (SCA).
Within this tolerance, both monitoring channels may signal different signal states of the same safe cam.

Note: A change only becomes effective after a POWER ON.

p9540 SI Motion SCA tolerance (processor 1) / SI Mtn SCA tol P1

SERVO_S110-DP (Safety rot), SERVO_S110-CAN (Safety rot), SERVO_S110-PN (Safety rot)

Can be changed: U, T	**Calculated:** -	**Access level:** 4
Data type: FloatingPoint32	**Dyn. index:** -	**Func. diagram:** -
P-Group: Safety Integrated	**Unit group:** -	**Unit selection:** -
Not for motor type: -	**Scaling:** -	**Expert list:** 1
Min	**Max**	**Factory setting**
0.0010 [°]	10.0000 [°]	0.1000 [°]

Description: Sets the tolerance for the function "Safe Cam" (SCA).
Within this tolerance, both monitoring channels may signal different signal states of the same safe cam.

Note: A change only becomes effective after a POWER ON.

p9542 SI Motion act. val. comparison tolerance (crossw.) (processor 1) / SI Mtn act tol P1

SERVO_S110-DP, SERVO_S110-CAN, SERVO_S110-PN

Can be changed: C2(95)	**Calculated:** -	**Access level:** 3
Data type: FloatingPoint32	**Dyn. index:** -	**Func. diagram:** -
P-Group: Safety Integrated	**Unit group:** -	**Unit selection:** -
Not for motor type: -	**Scaling:** -	**Expert list:** 1
Min	**Max**	**Factory setting**
0.0010 [mm]	360.0000 [mm]	0.1000 [mm]

Description: Sets the tolerance for the crosswise data comparison of the actual position between the two monitoring channels.
For encoderless motion monitoring functions, the tolerance must be set to a higher value (12 degrees rotary and 1 mm linear).

Dependency: Refer to: C01711

p9542 SI Motion act. val. comparison tolerance (crossw.) (processor 1) / SI Mtn act tol P1

SERVO_S110-DP (Safety rot), SERVO_S110-CAN (Safety rot), SERVO_S110-PN (Safety rot)

Can be changed: C2(95)	**Calculated:** -	**Access level:** 3
Data type: FloatingPoint32	**Dyn. index:** -	**Func. diagram:** -
P-Group: Safety Integrated	**Unit group:** -	**Unit selection:** -
Not for motor type: -	**Scaling:** -	**Expert list:** 1
Min	**Max**	**Factory setting**
0.0010 [°]	360.0000 [°]	0.1000 [°]

Description: Sets the tolerance for the crosswise data comparison of the actual position between the two monitoring channels.
For encoderless motion monitoring functions, the tolerance must be set to a higher value (12 degrees rotary and 1 mm linear).

Dependency: Refer to: C01711

p9544 SI Motion actual value comparison tolerance (referencing) (P1) / SI Mtn ref tol P1

SERVO_S110-DP, SERVO_S110-CAN, SERVO_S110-PN

Can be changed: U, T	**Calculated:** -	**Access level:** 4
Data type: FloatingPoint32	**Dyn. index:** -	**Func. diagram:** -
P-Group: Safety Integrated	**Unit group:** -	**Unit selection:** -
Not for motor type: -	**Scaling:** -	**Expert list:** 1
Min	**Max**	**Factory setting**
0.0000 [mm]	36.0000 [mm]	0.0100 [mm]

Description: Sets the tolerance to check the actual values after referencing (incremental encoder) or when powering up (absolute encoder).

Dependency: Refer to: C01711

Note: A change only becomes effective after a POWER ON.

p9544 SI Motion actual value comparison tolerance (referencing) (P1) / SI Mtn ref tol P1

SERVO_S110-DP (Safety rot), SERVO_S110-CAN (Safety rot), SERVO_S110-PN (Safety rot)

Can be changed: U, T	**Calculated:** -	**Access level:** 4
Data type: FloatingPoint32	**Dyn. index:** -	**Func. diagram:** -
P-Group: Safety Integrated	**Unit group:** -	**Unit selection:** -
Not for motor type: -	**Scaling:** -	**Expert list:** 1
Min	**Max**	**Factory setting**
0.0000 [°]	36.0000 [°]	0.0100 [°]

Description: Sets the tolerance to check the actual values after referencing (incremental encoder) or when powering up (absolute encoder).

Dependency: Refer to: C01711

Note: A change only becomes effective after a POWER ON.

p9545 SI Motion SSM filter time (processor 1) / SI Mtn SSM filt P1

SERVO_S110-DP, SERVO_S110-CAN, SERVO_S110-PN

Can be changed: C2(95)	**Calculated:** -	**Access level:** 3
Data type: FloatingPoint32	**Dyn. index:** -	**Func. diagram:** 2860
P-Group: Safety Integrated	**Unit group:** -	**Unit selection:** -
Not for motor type: -	**Scaling:** -	**Expert list:** 1
Min	**Max**	**Factory setting**
0.00 [ms]	100.00 [ms]	0.00 [ms]

Description: Sets the filter time for the SSM feedback signal to detect standstill.

Note: The filter time is effective only if the function is enabled (p9501.16 = 1).
The parameter is included in the crosswise data comparison of the two monitoring channels.
SSM: Safe Speed Monitor (safety-relevant feedback signal from the velocity monitoring)

p9546 SI Motion SSM velocity limit (processor 1) / SI Mtn SSM v_limP1

SERVO_S110-DP, SERVO_S110-CAN, SERVO_S110-PN

Can be changed: C2(95)	**Calculated:** -	**Access level:** 3
Data type: FloatingPoint32	**Dyn. index:** -	**Func. diagram:** 2860
P-Group: Safety Integrated	**Unit group:** -	**Unit selection:** -
Not for motor type: -	**Scaling:** -	**Expert list:** 1
Min	**Max**	**Factory setting**
0.00 [mm/min]	1000000.00 [mm/min]	20.00 [mm/min]

Description: Sets the velocity limit for the SSM feedback signal to detect standstill (n < nx).
When this limit value is undershot, the signal "SSM feedback signal active" (SGA n < n_x) is set.
For p9568 = 0, the value in p9546 is also applicable for the function "SAM".

Caution: The following applies for p9506 = 3:

The "SAM" function is switched out if the selected threshold value is undershot.

Note: F-DO: Failsafe Digital Output / SGA: Safety-related output
SAM: Safe Acceleration Monitor (safe acceleration monitoring)
SSM: Safe Speed Monitor (safety-relevant feedback signal from the velocity monitoring) / SGA n < nx: Safety-related output n < nx

p9546 SI Motion SSM velocity limit (processor 1) / SI Mtn SSM v_limP1

SERVO_S110-DP (Safety rot), SERVO_S110-CAN (Safety rot), SERVO_S110-PN (Safety rot)

Can be changed: C2(95)	**Calculated:** -	**Access level:** 3
Data type: FloatingPoint32	**Dyn. index:** -	**Func. diagram:** 2860
P-Group: Safety Integrated	**Unit group:** -	**Unit selection:** -
Not for motor type: -	**Scaling:** -	**Expert list:** 1
Min	**Max**	**Factory setting**
0.00 [rpm]	1000000.00 [rpm]	20.00 [rpm]

Description: Sets the velocity limit for the SSM feedback signal to detect standstill (n < nx).
When this limit value is undershot, the signal "SSM feedback signal active" (SGA n < n_x) is set.
For p9568 = 0, the value in p9546 is also applicable for the function "SAM".

Caution: The following applies for p9506 = 3:

The "SAM" function is switched out if the selected threshold value is undershot.

Note: F-DO: Failsafe Digital Output / SGA: Safety-related output
SAM: Safe Acceleration Monitor (safe acceleration monitoring)
SSM: Safe Speed Monitor (safety-relevant feedback signal from the velocity monitoring) / SGA n < nx: Safety-related output n < nx

p9547 SI Motion SSM velocity hysteresis (processor 1) / SI Mtn SSM hyst P1

SERVO_S110-DP, SERVO_S110-CAN, SERVO_S110-PN

Can be changed: C2(95)	**Calculated:** -	**Access level:** 3
Data type: FloatingPoint32	**Dyn. index:** -	**Func. diagram:** 2860
P-Group: Safety Integrated	**Unit group:** -	**Unit selection:** -
Not for motor type: -	**Scaling:** -	**Expert list:** 1
Min	**Max**	**Factory setting**
0.0010 [mm/min]	500.0000 [mm/min]	10.0000 [mm/min]

Description: Sets the velocity hysteresis for the SSM feedback signal to detect standstill (n < nx).
Dependency: Refer to: C01711
Note: The velocity hysteresis is effective only if the function is enabled (p9501.16 = 1).
The parameter is included in the crosswise data comparison of the two monitoring channels.
SSM: Safe Speed Monitor (safety-relevant feedback signal from the velocity monitoring)

p9547 SI Motion SSM velocity hysteresis (processor 1) / SI Mtn SSM hyst P1

SERVO_S110-DP (Safety rot), SERVO_S110-CAN (Safety rot), SERVO_S110-PN (Safety rot)

Can be changed: C2(95)	**Calculated:** -	**Access level:** 3
Data type: FloatingPoint32	**Dyn. index:** -	**Func. diagram:** 2860
P-Group: Safety Integrated	**Unit group:** -	**Unit selection:** -
Not for motor type: -	**Scaling:** -	**Expert list:** 1
Min	**Max**	**Factory setting**
0.0010 [rpm]	500.0000 [rpm]	10.0000 [rpm]

Description: Sets the velocity hysteresis for the SSM feedback signal to detect standstill (n < nx).
Dependency: Refer to: C01711
Note: The velocity hysteresis is effective only if the function is enabled (p9501.16 = 1).
The parameter is included in the crosswise data comparison of the two monitoring channels.
SSM: Safe Speed Monitor (safety-relevant feedback signal from the velocity monitoring)

p9548 SI Motion SBR actual velocity tolerance (processor 1) / SI Mtn SBR tol P1

SERVO_S110-DP, SERVO_S110-CAN, SERVO_S110-PN

Can be changed: C2(95)	**Calculated:** -	**Access level:** 3
Data type: FloatingPoint32	**Dyn. index:** -	**Func. diagram:** -
P-Group: Safety Integrated	**Unit group:** -	**Unit selection:** -
Not for motor type: -	**Scaling:** -	**Expert list:** 1
Min	**Max**	**Factory setting**
0.00 [mm/min]	120000.00 [mm/min]	300.00 [mm/min]

Description: Sets the velocity tolerance for the "SAM" function.
Dependency: Refer to: C01706
Note: SAM: Safe Acceleration Monitor (safe acceleration monitoring)

p9548 SI Motion SBR actual velocity tolerance (processor 1) / SI Mtn SBR tol P1

SERVO_S110-DP (Safety rot), SERVO_S110-CAN (Safety rot), SERVO_S110-PN (Safety rot)

Can be changed: C2(95)	**Calculated:** -	**Access level:** 3
Data type: FloatingPoint32	**Dyn. index:** -	**Func. diagram:** -
P-Group: Safety Integrated	**Unit group:** -	**Unit selection:** -
Not for motor type: -	**Scaling:** -	**Expert list:** 1
Min	**Max**	**Factory setting**
0.00 [rpm]	120000.00 [rpm]	300.00 [rpm]

Description: Sets the velocity tolerance for the "SAM" function.
Dependency: Refer to: C01706
Note: SAM: Safe Acceleration Monitor (safe acceleration monitoring)

p9549 SI Motion slip velocity tolerance (processor 1) / SI Mtn slip P1

SERVO_S110-DP, SERVO_S110-CAN, SERVO_S110-PN

Can be changed: C2(95)	**Calculated:** -	**Access level:** 3
Data type: FloatingPoint32	**Dyn. index:** -	**Func. diagram:** -
P-Group: Safety Integrated	**Unit group:** -	**Unit selection:** -
Not for motor type: -	**Scaling:** -	**Expert list:** 1
Min	**Max**	**Factory setting**
0.00 [mm/min]	6000.00 [mm/min]	6.00 [mm/min]

Description: Sets the velocity tolerance that is used for a 2-encoder system in crosswise comparison between the two monitoring channels.

Dependency: Refer to: p9501, p9542

Note: If the "actual value synchronization" is not enabled (p9501.3 = 0), then the value parameterized in p9542 is used as tolerance in the crosswise data comparison.

p9549 SI Motion slip velocity tolerance (processor 1) / SI Mtn slip P1

SERVO_S110-DP (Safety rot), SERVO_S110-CAN (Safety rot), SERVO_S110-PN (Safety rot)

Can be changed: C2(95)	**Calculated:** -	**Access level:** 3
Data type: FloatingPoint32	**Dyn. index:** -	**Func. diagram:** -
P-Group: Safety Integrated	**Unit group:** -	**Unit selection:** -
Not for motor type: -	**Scaling:** -	**Expert list:** 1
Min	**Max**	**Factory setting**
0.00 [rpm]	6000.00 [rpm]	6.00 [rpm]

Description: Sets the velocity tolerance that is used for a 2-encoder system in crosswise comparison between the two monitoring channels.

Dependency: Refer to: p9501, p9542

Note: If the "actual value synchronization" is not enabled (p9501.3 = 0), then the value parameterized in p9542 is used as tolerance in the crosswise data comparison.

p9550 SI Motion SGE changeover tolerance time (processor 1) / SI Mtn SGE_chg tol

SERVO_S110-DP, SERVO_S110-CAN, SERVO_S110-PN

Can be changed: U, T	**Calculated:** -	**Access level:** 4
Data type: FloatingPoint32	**Dyn. index:** -	**Func. diagram:** -
P-Group: Safety Integrated	**Unit group:** -	**Unit selection:** -
Not for motor type: -	**Scaling:** -	**Expert list:** 1
Min	**Max**	**Factory setting**
0.00 [ms]	10000.00 [ms]	500.00 [ms]

Description: Sets the tolerance time for the changeover of the safety-related inputs (SGE).

p9551 SI Motion SLS changeover delay time (processor 1) / SI Mtn SLS t P1

SERVO_S110-DP, SERVO_S110-CAN, SERVO_S110-PN

Can be changed: C2(95)	**Calculated:** -	**Access level:** 3
Data type: FloatingPoint32	**Dyn. index:** -	**Func. diagram:** 2825
P-Group: Safety Integrated	**Unit group:** -	**Unit selection:** -
Not for motor type: -	**Scaling:** -	**Expert list:** 1
Min	**Max**	**Factory setting**
0.00 [ms]	600000.00 [ms]	100.00 [ms]

Description: Sets the delay time for the SLS changeover or for the changeover from SLS to SOS for the function "Safely-Limited Speed" (SLS).

When transitioning from a higher to a lower safely-limited velocity/speed stage or to the safe operating stop (SOS), within this delay time, the "old" velocity stage remains active.

Even if SLS or SOS is activated from non safety-related operation, then this delay is still applied.

Note: SLS: Safely-Limited Speed

SOS: Safe Operating Stop

p9552 SI Motion transition time STOP C to SOS (processor 1) / SI Mtn t C->SOS P1

SERVO_S110-DP, SERVO_S110-CAN, SERVO_S110-PN

Can be changed: C2(95)	**Calculated:** -	**Access level:** 3
Data type: FloatingPoint32	**Dyn. index:** -	**Func. diagram:** 2825
P-Group: Safety Integrated	**Unit group:** -	**Unit selection:** -
Not for motor type: -	**Scaling:** -	**Expert list:** 1
Min	**Max**	**Factory setting**
0.00 [ms]	600000.00 [ms]	100.00 [ms]

Description: Sets the transition time from STOP C to "Safe Operating Stop" (SOS).

Note: SOS: Safe Operating Stop

p9553 SI Motion transition time STOP D to SOS (processor 1) / SI Mtn t D->SOS P1

SERVO_S110-DP, SERVO_S110-CAN, SERVO_S110-PN

Can be changed: C2(95)	**Calculated:** -	**Access level:** 3
Data type: FloatingPoint32	**Dyn. index:** -	**Func. diagram:** 2825
P-Group: Safety Integrated	**Unit group:** -	**Unit selection:** -
Not for motor type: -	**Scaling:** -	**Expert list:** 1
Min	**Max**	**Factory setting**
0.00 [ms]	600000.00 [ms]	100.00 [ms]

Description: Sets the transition time from STOP D to "Safe Operating Stop" (SOS).

Note: SOS: Safe Operating Stop

p9555 SI Motion transition time STOP F to STOP B (processor 1) / SI Mtn t F->B P1

SERVO_S110-DP, SERVO_S110-CAN, SERVO_S110-PN

Can be changed: C2(95)	**Calculated:** -	**Access level:** 3
Data type: FloatingPoint32	**Dyn. index:** -	**Func. diagram:** 2825
P-Group: Safety Integrated	**Unit group:** -	**Unit selection:** -
Not for motor type: -	**Scaling:** -	**Expert list:** 1
Min	**Max**	**Factory setting**
0.00 [ms]	600000.00 [ms]	0.00 [ms]

Description: Sets the transition time from STOP F to STOP B.

Dependency: Refer to: C01711

p9556 SI Motion pulse suppression delay time (processor 1) / SI Mtn IL t_del P1

SERVO_S110-DP, SERVO_S110-CAN, SERVO_S110-PN

Can be changed: C2(95)	**Calculated:** -	**Access level:** 3
Data type: FloatingPoint32	**Dyn. index:** -	**Func. diagram:** 2825
P-Group: Safety Integrated	**Unit group:** -	**Unit selection:** -
Not for motor type: -	**Scaling:** -	**Expert list:** 1
Min	**Max**	**Factory setting**
0.00 [ms]	600000.00 [ms]	100.00 [ms]

Description: Sets the delay time for the safe pulse suppression after STOP B.

In the case of encoderless motion monitoring functions with brake ramp monitoring (p9506 = 1), the parameter has no effect.

Dependency: Refer to: p9560

Refer to: C01701

p9557 SI Motion pulse suppression test time (processor 1) / SI Mtn IL t_test

SERVO_S110-DP, SERVO_S110-CAN, SERVO_S110-PN

Can be changed: C2(95)	**Calculated:** -	**Access level:** 3
Data type: FloatingPoint32	**Dyn. index:** -	**Func. diagram:** -
P-Group: Safety Integrated	**Unit group:** -	**Unit selection:** -
Not for motor type: -	**Scaling:** -	**Expert list:** 1
Min	**Max**	**Factory setting**
0.00 [ms]	10000.00 [ms]	100.00 [ms]

Description: Sets the time after which the pulses must have been suppressed when initiating the test stop.

Dependency: Refer to: C01798

Note: A change only becomes effective after a POWER ON.

p9558 SI Motion acceptance test mode time limit (processor 1) / SI Mtn acc t P1

SERVO_S110-DP, SERVO_S110-CAN, SERVO_S110-PN

Can be changed: C2(95)	**Calculated:** -	**Access level:** 3
Data type: FloatingPoint32	**Dyn. index:** -	**Func. diagram:** -
P-Group: Safety Integrated	**Unit group:** -	**Unit selection:** -
Not for motor type: -	**Scaling:** -	**Expert list:** 1
Min	**Max**	**Factory setting**
5000.00 [ms]	100000.00 [ms]	40000.00 [ms]

Description: Sets the maximum time for the acceptance test mode.
If the acceptance test mode takes longer than the selected time limit, then the mode is automatically terminated.

Dependency: Refer to: C01799

p9559 SI Motion forced checking procedure timer (processor 1) / SI Mtn dyn timer

SERVO_S110-DP, SERVO_S110-CAN, SERVO_S110-PN

Can be changed: C2(95)	**Calculated:** -	**Access level:** 3
Data type: FloatingPoint32	**Dyn. index:** -	**Func. diagram:** -
P-Group: Safety Integrated	**Unit group:** -	**Unit selection:** -
Not for motor type: -	**Scaling:** -	**Expert list:** 1
Min	**Max**	**Factory setting**
0.00 [h]	9000.00 [h]	8.00 [h]

Description: Sets the time interval for carrying out the forced checking procedure and testing the safety motion monitoring functions integrated in the drives.
Within the parameterized time, the safety functions must have been tested at least once (including de-selection of the "STO" function).
This monitoring time is reset each time the test is carried out.
The signal source to initiate the forced checking procedure is set in p9705.

Dependency: Refer to: p9705
Refer to: A01697, C01798

Note: STO: Safe Torque Off

p9560 SI Motion pulse suppression shutdown velocity (processor 1) / SI Mtn IL v_sh P1

SERVO_S110-DP, SERVO_S110-CAN, SERVO_S110-PN

Can be changed: C2(95)	**Calculated:** -	**Access level:** 3
Data type: FloatingPoint32	**Dyn. index:** -	**Func. diagram:** -
P-Group: Safety Integrated	**Unit group:** -	**Unit selection:** -
Not for motor type: -	**Scaling:** -	**Expert list:** 1
Min	**Max**	**Factory setting**
0.00 [mm/min]	6000.00 [mm/min]	0.00 [mm/min]

Description: Sets the shutdown velocity for pulse suppression.
Below this velocity "standstill" is assumed and for STOP B / SS1, the pulses are suppressed (by changing to STOP A).
In the case of encoderless motion monitoring functions, the parameter must be > 0 (recommended value: 10).

Dependency: Refer to: p9556

p9560 SI Motion pulse suppression shutdown speed (Control Unit) / SI Mtn IL n_shutCU

SERVO_S110-DP (Safety rot), SERVO_S110-CAN (Safety rot), SERVO_S110-PN (Safety rot)

Can be changed: C2(95)	**Calculated:** -	**Access level:** 3
Data type: FloatingPoint32	**Dyn. index:** -	**Func. diagram:** -
P-Group: Safety Integrated	**Unit group:** -	**Unit selection:** -
Not for motor type: -	**Scaling:** -	**Expert list:** 1
Min	**Max**	**Factory setting**
0.00 [rpm]	6000.00 [rpm]	0.00 [rpm]

Description: Sets the shutdown speed for the pulse suppression.
Below this speed "standstill" is assumed and for STOP B, the pulses are suppressed by changing to STOP A).

Dependency: Refer to: p9556

p9561 SI Motion SLS stop response (processor 1) / SI Mtn SLS resp

SERVO_S110-DP, SERVO_S110-CAN, SERVO_S110-PN

Can be changed: U, T	**Calculated:** -	**Access level:** 4
Data type: Integer16	**Dyn. index:** -	**Func. diagram:** -
P-Group: Safety Integrated	**Unit group:** -	**Unit selection:** -
Not for motor type: -	**Scaling:** -	**Expert list:** 1
Min	**Max**	**Factory setting**
0	14	5

Description: Sets the stop response for the function "Safely-Limited Speed" (SLS).
This setting applies for all SLS limit values.
An input value of less than 5 signifies personnel protection, from 10 and upwards, machine protection.
This parameter can only be used for ncSI, not for dbSI1/2. For motion monitoring functions integrated in the drive (dbSI1/2) only the value 5 is permissible; all other settings result in fault F01711 or F30711 with fault value 44.

Value:
0: STOP A
1: STOP B
2: STOP C
3: STOP D
4: STOP E
5: Sets the stop response via p9563 (SLS-specific)
10: STOP A with delayed pulse suppression when the bus fails
11: STOP B with delayed pulse suppression when the bus fails
12: STOP C with delayed pulse suppression when the bus fails
13: STOP D with delayed pulse suppression when the bus fails
14: STOP E with delayed pulse suppression when the bus fails

Dependency: Refer to: p9531, p9563

Note: SLS: Safely-Limited Speed

p9562 SI Motion SLP stop response (processor 1) / SI Mtn SLP resp

SERVO_S110-DP, SERVO_S110-CAN, SERVO_S110-PN

Can be changed: U, T	**Calculated:** -	**Access level:** 4
Data type: Integer16	**Dyn. index:** -	**Func. diagram:** -
P-Group: Safety Integrated	**Unit group:** -	**Unit selection:** -
Not for motor type: -	**Scaling:** -	**Expert list:** 1
Min	**Max**	**Factory setting**
2	4	2

Description: Sets the stop response for the function "Safely-Limited Position" (SLP).

Value:
2: STOP C
3: STOP D
4: STOP E

Dependency: Refer to: p9534, p9535

Note: SLP: Safely-Limited Position

p9563[0...3] SI Motion SLS-specific stop response (processor 1) / SI Mtn SLS stop P1

SERVO_S110-DP, SERVO_S110-CAN, SERVO_S110-PN

Can be changed: C2(95)	**Calculated:** -	**Access level:** 3
Data type: Integer16	**Dyn. index:** -	**Func. diagram:** -
P-Group: Safety Integrated	**Unit group:** -	**Unit selection:** -
Not for motor type: -	**Scaling:** -	**Expert list:** 1
Min	**Max**	**Factory setting**
0	14	2

Description: Sets the SLS-specific stop response for the function "Safely-Limited Speed" (SLS).
These settings apply to the individual limit values for SLS.
In the case of encoderless motion monitoring (p9506/p9306 = 1), only a value of 0 or 1 is permitted.

Value:
0: STOP A
1: STOP B
2: STOP C
3: STOP D
4: STOP E

10: STOP A with delayed pulse suppression when the bus fails
11: STOP B with delayed pulse suppression when the bus fails
12: STOP C with delayed pulse suppression when the bus fails
13: STOP D with delayed pulse suppression when the bus fails
14: STOP E with delayed pulse suppression when the bus fails

Index: [0] = Limit value SLS1
[1] = Limit value SLS2
[2] = Limit value SLS3
[3] = Limit value SLS4

Dependency: Refer to: p9531, p9561

Note: The values 4 and 14 are not supported on Control Unit 305.
SLS: Safely-Limited Speed

p9564 SI Motion SDI tolerance (processor 1) / SI Mtn SDI tol P1

SERVO_S110-DP, SERVO_S110-CAN, SERVO_S110-PN

Can be changed: C2(95)	**Calculated:** -	**Access level:** 3
Data type: FloatingPoint32	**Dyn. index:** -	**Func. diagram:** 2861
P-Group: Safety Integrated	**Unit group:** -	**Unit selection:** -
Not for motor type: -	**Scaling:** -	**Expert list:** 1
Min	**Max**	**Factory setting**
0.001 [mm]	360.000 [mm]	12.000 [mm]

Description: Sets the tolerance for the function "Safe motion direction" (SDI). This motion in the monitored direction is still permissible before an alarm is initiated.

Dependency: Refer to: p9565, p9566
Refer to: C01716

Note: SDI: Safe Direction (safe motion direction)

p9564 SI Motion SDI tolerance (processor 1) / SI Mtn SDI tol P1

SERVO_S110-DP (Safety rot), SERVO_S110-CAN (Safety rot), SERVO_S110-PN (Safety rot)

Can be changed: C2(95)	**Calculated:** -	**Access level:** 3
Data type: FloatingPoint32	**Dyn. index:** -	**Func. diagram:** 2861
P-Group: Safety Integrated	**Unit group:** -	**Unit selection:** -
Not for motor type: -	**Scaling:** -	**Expert list:** 1
Min	**Max**	**Factory setting**
0.001 [°]	360.000 [°]	12.000 [°]

Description: Sets the tolerance for the function "Safe motion direction" (SDI). This motion in the monitored direction is still permissible before an alarm is initiated.

Dependency: Refer to: p9565, p9566
Refer to: C01716

Note: SDI: Safe Direction (safe motion direction)

p9565 SI Motion SDI delay time (processor 1) / SI Mtn SDI t P1

SERVO_S110-DP, SERVO_S110-CAN, SERVO_S110-PN

Can be changed: C2(95)	**Calculated:** -	**Access level:** 3
Data type: FloatingPoint32	**Dyn. index:** -	**Func. diagram:** 2861
P-Group: Safety Integrated	**Unit group:** -	**Unit selection:** -
Not for motor type: -	**Scaling:** -	**Expert list:** 1
Min	**Max**	**Factory setting**
0.00 [ms]	600000.00 [ms]	100.00 [ms]

Description: Sets the delay time for the function "Safe motion direction" (SDI). When selecting the SDI function, motion in the monitored direction is permissible as a maximum for this time; this means that this time can be used for braking existing motion.

Dependency: Refer to: p9564, p9566
Refer to: C01716

Note: SDI: Safe Direction (safe motion direction)

p9566 SI Motion SDI stop response (processor 1) / SI Mtn SDI Stop P1

SERVO_S110-DP, SERVO_S110-CAN, SERVO_S110-PN

Can be changed: C2(95)	**Calculated:** -	**Access level:** 3
Data type: Integer16	**Dyn. index:** -	**Func. diagram:** 2861
P-Group: Safety Integrated	**Unit group:** -	**Unit selection:** -
Not for motor type: -	**Scaling:** -	**Expert list:** 1
Min	**Max**	**Factory setting**
0	14	1

Description: Sets the stop response for the function "Safe motion direction" (SDI).
This setting applies to both directions of motion.

Value:
0: STOP A
1: STOP B
2: STOP C
3: STOP D
4: STOP E
10: STOP A with delayed pulse suppression when the bus fails
11: STOP B with delayed pulse suppression when the bus fails
12: STOP C with delayed pulse suppression when the bus fails
13: STOP D with delayed pulse suppression when the bus fails
14: STOP E with delayed pulse suppression when the bus fails

Dependency: Refer to: p9564, p9565
Refer to: C01716

Note: The values 4 and 14 are not supported on Control Unit 305.
SDI: Safe Direction (safe motion direction)

p9568 SI Motion SAM velocity limit (processor 1) / SI Mtn SAM v_limP1

SERVO_S110-DP, SERVO_S110-CAN, SERVO_S110-PN

Can be changed: C2(95)	**Calculated:** -	**Access level:** 3
Data type: FloatingPoint32	**Dyn. index:** -	**Func. diagram:** -
P-Group: Safety Integrated	**Unit group:** -	**Unit selection:** -
Not for motor type: -	**Scaling:** -	**Expert list:** 1
Min	**Max**	**Factory setting**
0.00 [mm/min]	1000.00 [mm/min]	0.00 [mm/min]

Description: Sets the velocity tolerance limit for the "SAM" function.
SAM is de-activated once the set velocity limit has been undershot.

Note: SAM: Safe Acceleration Monitor (safe acceleration monitoring)
SSM: Safe Speed Monitor (safety-relevant feedback signal from the velocity monitoring)
For p9568 = p9368 = 0, the following applies:
The value in p9546/p9346 (SSM) is applied as the velocity limit for SAM.

p9568 SI Motion SAM velocity limit (processor 1) / SI Mtn SAM v_limP1

SERVO_S110-DP (Safety rot), SERVO_S110-CAN (Safety rot), SERVO_S110-PN (Safety rot)

Can be changed: C2(95)	**Calculated:** -	**Access level:** 3
Data type: FloatingPoint32	**Dyn. index:** -	**Func. diagram:** -
P-Group: Safety Integrated	**Unit group:** -	**Unit selection:** -
Not for motor type: -	**Scaling:** -	**Expert list:** 1
Min	**Max**	**Factory setting**
0.00 [rpm]	1000.00 [rpm]	0.00 [rpm]

Description: Sets the velocity tolerance limit for the "SAM" function.
SAM is de-activated once the set velocity limit has been undershot.

Note: SAM: Safe Acceleration Monitor (safe acceleration monitoring)
SSM: Safe Speed Monitor (safety-relevant feedback signal from the velocity monitoring)
For p9568 = p9368 = 0, the following applies:
The value in p9546/p9346 (SSM) is applied as the velocity limit for SAM.

p9570 SI Motion acceptance test mode (processor 1) / SI Mtn Acc_mode

SERVO_S110-DP, SERVO_S110-CAN, SERVO_S110-PN

Can be changed: U, T	**Calculated:** -	**Access level:** 3
Data type: Integer16	**Dyn. index:** -	**Func. diagram:** -
P-Group: Safety Integrated	**Unit group:** -	**Unit selection:** -
Not for motor type: -	**Scaling:** -	**Expert list:** 1
Min	**Max**	**Factory setting**
0000 hex	00AC hex	0000 hex

Description: Setting to select and de-select the acceptance test mode.

Value:
0: [00 hex] De-select the acceptance test mode
172: [AC hex] Select the acceptance test mode

Dependency: Refer to: p9558, r9571, p9601
Refer to: C01799

Note: Acceptance test mode can only be selected if the motion monitoring functions, which are integrated in the drives, are enabled (p9601.2/p9801.2).

r9571 SI Motion acceptance test status (processor 1) / SI Mtn acc_status

SERVO_S110-DP, SERVO_S110-CAN, SERVO_S110-PN

Can be changed: -	**Calculated:** -	**Access level:** 3
Data type: Integer16	**Dyn. index:** -	**Func. diagram:** -
P-Group: Safety Integrated	**Unit group:** -	**Unit selection:** -
Not for motor type: -	**Scaling:** -	**Expert list:** 1
Min	**Max**	**Factory setting**
0000 hex	00AC hex	-

Description: Displays the status of the acceptance test mode.

Value:
0: [00 hex] Acc_mode inactive
12: [0C hex] Acc_mode not possible due to POWER ON fault
13: [0D hex] Acc_mode not possible due to incorrect ID in p9570
15: [0F hex] Acc_mode not possible due to expired Acc_timer
172: [AC hex] Acc_mode active

Dependency: Refer to: p9558, p9570
Refer to: C01799

p9581 SI Motion brake ramp reference value (processor 1) / SI Mtn ramp ref P1

SERVO_S110-DP, SERVO_S110-CAN, SERVO_S110-PN

Can be changed: C2(95)	**Calculated:** -	**Access level:** 3
Data type: FloatingPoint32	**Dyn. index:** -	**Func. diagram:** -
P-Group: Safety Integrated	**Unit group:** -	**Unit selection:** -
Not for motor type: -	**Scaling:** -	**Expert list:** 1
Min	**Max**	**Factory setting**
600.0000 [mm/min]	24000.0000 [mm/min]	1500.0000 [mm/min]

Description: Sets the reference value to define the brake ramp.
The rate of rise of the brake ramp depends upon p9581 (reference value) and p9583 (monitoring time).

Dependency: Refer to: p9582, p9583

p9581 SI Motion brake ramp reference value (processor 1) / SI Mtn ramp ref P1

SERVO_S110-DP (Safety rot), SERVO_S110-CAN (Safety rot), SERVO_S110-PN (Safety rot)

Can be changed: C2(95)	**Calculated:** -	**Access level:** 3
Data type: FloatingPoint32	**Dyn. index:** -	**Func. diagram:** -
P-Group: Safety Integrated	**Unit group:** -	**Unit selection:** -
Not for motor type: -	**Scaling:** -	**Expert list:** 1
Min	**Max**	**Factory setting**
600.0000 [rpm]	24000.0000 [rpm]	1500.0000 [rpm]

Description: Sets the reference value to define the brake ramp.
The rate of rise of the brake ramp depends upon p9581 (reference value) and p9583 (monitoring time).

Dependency: Refer to: p9582, p9583

p9582 SI Motion brake ramp delay time (processor 1) / SI Mtn rp t_del P1

SERVO_S110-DP, SERVO_S110-CAN, SERVO_S110-PN

Can be changed: C2(95)	**Calculated:** -	**Access level:** 3
Data type: FloatingPoint32	**Dyn. index:** -	**Func. diagram:** -
P-Group: Safety Integrated	**Unit group:** -	**Unit selection:** -
Not for motor type: -	**Scaling:** -	**Expert list:** 1
Min	**Max**	**Factory setting**
10.00 [ms]	99000.00 [ms]	250.00 [ms]

Description: Sets the delay time for monitoring the brake ramp.
Monitoring of the brake ramp starts once the delay time has elapsed.

Dependency: Refer to: p9581, p9583

p9583 SI Motion brake ramp monitoring time (processor 1) / SI Mtn rp t_mon P1

SERVO_S110-DP, SERVO_S110-CAN, SERVO_S110-PN

Can be changed: C2(95)	**Calculated:** -	**Access level:** 3
Data type: FloatingPoint32	**Dyn. index:** -	**Func. diagram:** -
P-Group: Safety Integrated	**Unit group:** -	**Unit selection:** -
Not for motor type: -	**Scaling:** -	**Expert list:** 1
Min	**Max**	**Factory setting**
0.50 [s]	1000.00 [s]	10.00 [s]

Description: Sets the monitoring time to define the brake ramp.
The rate of rise of the brake ramp depends upon p9581 (reference value) and p9583 (monitoring time).

Dependency: Refer to: p9581, p9582

p9586 SI Motion delay time of the evaluation sensorless (CU) / SI Mtn t_del SL CU

SERVO_S110-DP, SERVO_S110-CAN, SERVO_S110-PN

Can be changed: C2(95)	**Calculated:** -	**Access level:** 3
Data type: FloatingPoint32	**Dyn. index:** -	**Func. diagram:** -
P-Group: Safety Integrated	**Unit group:** -	**Unit selection:** -
Not for motor type: -	**Scaling:** -	**Expert list:** 1
Min	**Max**	**Factory setting**
5.00 [ms]	1000.00 [ms]	100.00 [ms]

Description: Sets the evaluation delay for encoderless actual value sensing after pulse enable. The value should be greater than or equal to the motor magnetizing time. Shortening the time can result in Alarm 1711 with fault value 1041 or1042.

Dependency: Refer to: C01711

Notice: Reducing this value can adversely affect the actual value sensing and the plausibility check.
When the value is increased, this results in a longer evaluation delay.

Note: This parameter is only effective for encoderless actual value sensing (p9306/p9506 = 1).

p9587 SI Motion act val sensing sensorless filter time (processor 1) / SI Mtn SL filt P1

SERVO_S110-DP, SERVO_S110-CAN, SERVO_S110-PN

Can be changed: C2(95)	**Calculated:** -	**Access level:** 3
Data type: FloatingPoint32	**Dyn. index:** -	**Func. diagram:** -
P-Group: Safety Integrated	**Unit group:** -	**Unit selection:** -
Not for motor type: -	**Scaling:** -	**Expert list:** 1
Min	**Max**	**Factory setting**
0.00 [ms]	100.00 [ms]	25.00 [ms]

Description: Sets the filter time for smoothing the actual value with sensorless actual value sensing.

Note: This parameter is only effective for encoderless actual value sensing (p9306/p9506 = 1).

p9588 SI Motion act val sensing sensorless min current (processor 1) / SI Mtn SL I_min P1

SERVO_S110-DP, SERVO_S110-CAN, SERVO_S110-PN

Can be changed: C2(95)	**Calculated:** -	**Access level:** 3
Data type: FloatingPoint32	**Dyn. index:** -	**Func. diagram:** -
P-Group: Safety Integrated	**Unit group:** -	**Unit selection:** -
Not for motor type: -	**Scaling:** -	**Expert list:** 1
Min	**Max**	**Factory setting**
0.00 [%]	1000.00 [%]	10.00 [%]

Description: Sets the minimum current for encoderless actual value sensing in reference to 10 mA (i.e. when 1 % = 10 mA).
- The value must be increased if C01711 has occurred with message value 1042.
- The value must be decreased if C01711 has occurred with message value 1041.

Dependency: Refer to: C01711

Notice: Reducing this percentage value can adversely affect actual value sensing.

Note: This parameter is only effective for encoderless actual value sensing (p9306/p9506 = 1).

p9589 SI Motion voltage tolerance acceleration (processor 1) / SI Mtn U tol P1

SERVO_S110-DP, SERVO_S110-CAN, SERVO_S110-PN

Can be changed: C2(95)	**Calculated:** -	**Access level:** 3
Data type: FloatingPoint32	**Dyn. index:** -	**Func. diagram:** -
P-Group: Safety Integrated	**Unit group:** -	**Unit selection:** -
Not for motor type: -	**Scaling:** -	**Expert list:** 1
Min	**Max**	**Factory setting**
10.00 [%]	1000.00 [%]	100.00 [%]

Description: Sets the voltage tolerance for suppressing acceleration peaks.
Increasing this percentage value means that voltage peaks will need to have a higher amplitude during acceleration procedures if they are not to affect actual value sensing.
- The value must be increased if C01711 has occurred with message value 1043.
- The value must be lowered if acceleration procedures have led to an excessive Safety actual velocity.

Dependency: Refer to: C01711

Note: This parameter is only effective for encoderless actual value sensing (p9306/p9506 = 1).

r9590[0...3] SI Motion version safety motion monitoring (processor 1) / SI Mtn version P1

SERVO_S110-DP, SERVO_S110-CAN, SERVO_S110-PN

Can be changed: -	**Calculated:** -	**Access level:** 3
Data type: Unsigned16	**Dyn. index:** -	**Func. diagram:** -
P-Group: Safety Integrated	**Unit group:** -	**Unit selection:** -
Not for motor type: -	**Scaling:** -	**Expert list:** 1
Min	**Max**	**Factory setting**
-	-	-

Description: Displays the Safety Integrated version for the safe monitoring functions.

Index: [0] = Safety Version (major release)
[1] = Safety Version (minor release)
[2] = Safety Version (baselevel or patch)
[3] = Safety Version (hotfix)

Dependency: Refer to: r9770, r9890

Note: Example:
r9590[0] = 2, r9590[1] = 60, r9590[2] = 1, r9590[3] = 0 --> SI Motion version V02.60.01.00

p9601 SI enable functions integrated in the drive (processor 1) / SI enable fct P1

SERVO_S110-CAN

Can be changed: C2(95)	**Calculated:** -	**Access level:** 3
Data type: Unsigned32	**Dyn. index:** -	**Func. diagram:** -
P-Group: Safety Integrated	**Unit group:** -	**Unit selection:** -
Not for motor type: -	**Scaling:** -	**Expert list:** 1
Min	**Max**	**Factory setting**
-	-	0000 bin

Description: Sets the enable signals for safety functions on processor 1 that are integrated in the drive.

Bit field:	Bit	Signal name	1 signal	0 signal	FP
	00	STO (SH) via terminals (Control Unit) enable	Enable	Inhibit	2810
	02	Motion monitoring functions integr. in the drive (Control Unit)	Enable	Inhibit	-

Dependency: Refer to: r9771, p9801

Note: STO: Safe Torque Off

A change only becomes effective after a POWER ON.

p9601 SI enable functions integrated in the drive (processor 1) / SI enable fct P1

SERVO_S110-DP, SERVO_S110-PN

Can be changed: C2(95)	**Calculated:** -	**Access level:** 3
Data type: Unsigned32	**Dyn. index:** -	**Func. diagram:** -
P-Group: Safety Integrated	**Unit group:** -	**Unit selection:** -
Not for motor type: -	**Scaling:** -	**Expert list:** 1
Min	**Max**	**Factory setting**
-	-	0000 bin

Description: Sets the enable signals for safety functions on processor 1 that are integrated in the drive.

Bit field:	Bit	Signal name	1 signal	0 signal	FP
	00	STO (SH) via terminals (Control Unit) enable	Enable	Inhibit	2810
	02	Motion monitoring functions integr. in the drive (Control Unit)	Enable	Inhibit	-
	03	PROFIsafe (Control Unit) enable	Enable	Inhibit	-

Dependency: Refer to: r9771, p9801

Note: STO: Safe Torque Off

A change only becomes effective after a POWER ON.

p9602 SI enable Safe Brake Control (processor 1) / SI enable SBC P1

SERVO_S110-DP, SERVO_S110-CAN, SERVO_S110-PN

Can be changed: C2(95)	**Calculated:** -	**Access level:** 3
Data type: Integer16	**Dyn. index:** -	**Func. diagram:** 2814
P-Group: Safety Integrated	**Unit group:** -	**Unit selection:** -
Not for motor type: -	**Scaling:** -	**Expert list:** 1
Min	**Max**	**Factory setting**
0	1	0

Description: Sets the enable signal for the "Safe Brake Control" (SBC) function on processor 1.

Value:
0: Inhibit SBC
1: Enable SBC

Dependency: Refer to: p9802

Note: The "Safe Brake Control" function is not activated until at least one safety monitoring function has been enabled (i.e. p9501 not equal to 0 and/or p9601 not equal to 0).

It does not make sense to parameterize "no motor holding brake available" and enable "Safe Brake Control" (p1215 = 0, p9602 = p9802 = 1) if there is no motor holding brake.

It does not make sense to parameterize "motor holding brake the same as sequence control, connection via BICO" and enable "Safe Brake Control" (p1215 = 3, p9602 = p9802 = 1).

It is not permissible to parameterize "motor holding brake without feedback signals" and enable "Safe Brake Control" (p1278 = 1, p9602 = p9802 = 1).

SBC: Safe Brake Control

p9610 SI PROFIsafe address (processor 1) / SI PROFIsafe P1

SERVO_S110-DP, SERVO_S110-PN

Can be changed: C2(95)	**Calculated:** -	**Access level:** 3
Data type: Unsigned16	**Dyn. index:** -	**Func. diagram:** -
P-Group: Safety Integrated	**Unit group:** -	**Unit selection:** -
Not for motor type: -	**Scaling:** -	**Expert list:** 1
Min	**Max**	**Factory setting**
0000 hex	FFFE hex	0000 hex

Description: Sets the PROFIsafe address for processor 1.

Dependency: Refer to: p9810

p9650 SI F-DI changeover tolerance time (processor 1) / SI F-DI_chg tol P1

SERVO_S110-DP, SERVO_S110-CAN, SERVO_S110-PN

Can be changed: C2(95)	**Calculated:** -	**Access level:** 3
Data type: FloatingPoint32	**Dyn. index:** -	**Func. diagram:** 2810
P-Group: Safety Integrated	**Unit group:** -	**Unit selection:** -
Not for motor type: -	**Scaling:** -	**Expert list:** 1
Min	**Max**	**Factory setting**
0.00 [ms]	2000.00 [ms]	500.00 [ms]

Description: Sets the tolerance time for the changeover of the safety-related inputs on processor 1.

An F-DI changeover is not effective simultaneously due to the different runtimes in the two monitoring channels. After an F-DI changeover, dynamic data is not subject to a crosswise data comparison during this tolerance time.

Dependency: Refer to: p9850

Note: For a crosswise data comparison between p9650 and p9850, a difference of one Safety monitoring clock cycle is tolerated.

The parameterized time is internally rounded-off to an integer multiple of the monitoring clock cycle.

F-DI: Failsafe Digital Input

p9651 SI STO/SBC/SS1 debounce time (processor 1) / SI STO t_debou P1

SERVO_S110-DP, SERVO_S110-CAN, SERVO_S110-PN

Can be changed: C2(95)	**Calculated:** -	**Access level:** 3
Data type: FloatingPoint32	**Dyn. index:** -	**Func. diagram:** -
P-Group: Safety Integrated	**Unit group:** -	**Unit selection:** -
Not for motor type: -	**Scaling:** -	**Expert list:** 1
Min	**Max**	**Factory setting**
0.00 [ms]	100.00 [ms]	0.00 [ms]

Description: Sets the debounce time for the digital input used to control STO/SBC/SS1.

Note: The debounce time is rounded to whole milliseconds. It specifies the maximum duration of a fault pulse at the fail-safe digital inputs with no reaction/influence on the selection or deselection of the Safety Basic Functions.

Example:

Debounce time = 1 ms: Fault pulses of 1 ms are filtered; only pulses longer than 2 ms are processed.

Debounce time = 3 ms: Fault pulses of 3 ms are filtered; only pulses longer than 4 ms are processed.

p9652 SI Safe Stop 1 delay time (processor 1) / SI Stop 1 t_del P1

SERVO_S110-DP, SERVO_S110-CAN, SERVO_S110-PN

Can be changed: C2(95)	**Calculated:** -	**Access level:** 3
Data type: FloatingPoint32	**Dyn. index:** -	**Func. diagram:** -
P-Group: Safety Integrated	**Unit group:** -	**Unit selection:** -
Not for motor type: -	**Scaling:** -	**Expert list:** 1
Min	**Max**	**Factory setting**
0.00 [s]	300.00 [s]	0.00 [s]

Description: Sets the delay time of the pulse suppression for the "Safe Stop 1" (SS1) function on processor 1 to brake along the OFF3 down ramp (p1135).

Recommendation: In order that the drive can completely ramp-down along the OFF3 ramp and a motor holding brake that is possibly available can close, then the delay time should be set as follows:

Motor holding brake parameterized: delay time >= p1135 + p1228 + p1217

Motor holding brake not parameterized: delay time >= p1135 + p1228

Dependency: Refer to: p1135, p9852

Note: For a crosswise data comparison between p9652 and p9852, a difference of one Safety monitoring clock cycle is tolerated.
The parameterized time is rounded internally to an integer multiple of the monitoring clock cycle.
SS1: Safe Stop 1 (corresponds to Stop Category 1 acc. to EN60204)

p9658 SI transition time STOP F to STOP A (processor 1) / SI STOP F->A P1

SERVO_S110-DP, SERVO_S110-CAN, SERVO_S110-PN

Can be changed: C2(95)	**Calculated:** -	**Access level:** 3
Data type: FloatingPoint32	**Dyn. index:** -	**Func. diagram:** 2802
P-Group: Safety Integrated	**Unit group:** -	**Unit selection:** -
Not for motor type: -	**Scaling:** -	**Expert list:** 1
Min	**Max**	**Factory setting**
0.00 [ms]	30000.00 [ms]	0.00 [ms]

Description: Sets the transition period from STOP F to STOP A on processor 1.

Dependency: Refer to: r9795, p9858
Refer to: F01611

Note: For a crosswise data comparison between p9658 and p9858, a difference of one Safety monitoring clock cycle is tolerated.
The parameterized time is rounded internally to an integer multiple of the monitoring clock cycle.
STOP F: Defect in a monitoring channel (error in the crosswise data comparison)
STOP A: Pulse suppression via the safety shutdown path

p9659 SI forced checking procedure timer / SI FCP Timer

SERVO_S110-DP, SERVO_S110-CAN, SERVO_S110-PN

Can be changed: C2(95)	**Calculated:** -	**Access level:** 3
Data type: FloatingPoint32	**Dyn. index:** -	**Func. diagram:** 2810
P-Group: Safety Integrated	**Unit group:** -	**Unit selection:** -
Not for motor type: -	**Scaling:** -	**Expert list:** 1
Min	**Max**	**Factory setting**
0.00 [h]	9000.00 [h]	8.00 [h]

Description: Sets the time interval for carrying out the forced checking procedure and testing the Safety shutdown paths.
Within the parameterized time, STO must have been de-selected at least once. The monitoring time is reset each time that STO is de-selected.

Dependency: Refer to: A01699

Note: STO: Safe Torque Off / SH: Safe standstill

r9660 SI forced checking procedure remaining time / SI frc chk remain

SERVO_S110-DP, SERVO_S110-CAN, SERVO_S110-PN

Can be changed: -	**Calculated:** -	**Access level:** 3
Data type: FloatingPoint32	**Dyn. index:** -	**Func. diagram:** -
P-Group: Safety Integrated	**Unit group:** -	**Unit selection:** -
Not for motor type: -	**Scaling:** -	**Expert list:** 1
Min	**Max**	**Factory setting**
- [h]	- [h]	- [h]

Description: Displays the time remaining before dynamization and testing of the safety shutdown paths (forced checking procedure).

Dependency: Refer to: A01699

p9700 SI Motion copy function / SI Mtn copy fct

SERVO_S110-DP, SERVO_S110-CAN, SERVO_S110-PN

Can be changed: C2(95), U, T	**Calculated:** -	**Access level:** 3
Data type: Integer16	**Dyn. index:** -	**Func. diagram:** -
P-Group: Safety Integrated	**Unit group:** -	**Unit selection:** -
Not for motor type: -	**Scaling:** -	**Expert list:** 1
Min	**Max**	**Factory setting**
0000 hex	00D0 hex	0000 hex

Description: Setting to start the required copy function.

After starting, the corresponding parameters are copied from processor 1 to processor 2.
Once copying is complete, the parameter is automatically reset to zero.

Value:
0: [00 hex] Copy function ended
29: [1D hex] Start copy function node identifier
87: [57 hex] Start copy function SI parameters
208: [D0 hex] Start copy function SI basic parameters

Note:
Re value = 57 hex and D0 hex:
The value can only be set if the safety commissioning mode is set and the Safety Integrated password was entered.
Re value = D0 hex:
The following parameters are copied after starting the copy function:
p9601/p9801, p9602/p9802, p9610/9810, p9650/p9850, p9652/p9852, p9658/p9858

p9701 Acknowledge SI motion data change / Ackn SI Mtn dat

SERVO_S110-DP, SERVO_S110-CAN, SERVO_S110-PN

Can be changed: C2(95), U, T	**Calculated:** -	**Access level:** 3
Data type: Integer16	**Dyn. index:** -	**Func. diagram:** -
P-Group: Safety Integrated	**Unit group:** -	**Unit selection:** -
Not for motor type: -	**Scaling:** -	**Expert list:** 1
Min	**Max**	**Factory setting**
0000 hex	00EC hex	0000 hex

Description:
Setting to transfer the reference checksums from the associated actual checksums after changes (SI parameters, hardware).
After transferring the reference checksums, parameters are automatically reset to zero.

Value:
0: [00 hex] Data unchanged
172: [AC hex] Acknowledge data change complete
220: [DC hex] Acknowledge SI basic parameter change
236: [EC hex] Acknowledge hardware CRC

Dependency:
Refer to: r9398, p9399, r9728, p9729, r9798, p9799, r9898, p9899

Note:
Re value = AC and DC hex:
These values can only be set if the safety commissioning mode is set and the Safety Integrated password was entered.

p9705 BI: SI Motion: Test stop signal source / SI Mtn test stop

SERVO_S110-DP, SERVO_S110-CAN, SERVO_S110-PN

Can be changed: C2(95)	**Calculated:** -	**Access level:** 3
Data type: Unsigned32 / Binary	**Dyn. index:** -	**Func. diagram:** -
P-Group: Safety Integrated	**Unit group:** -	**Unit selection:** -
Not for motor type: -	**Scaling:** -	**Expert list:** 1
Min	**Max**	**Factory setting**
-	-	0

Description:
Sets the signal source for the test stop of the safety-relevant motion monitoring functions.

Caution:
Before setting the signal source in p9705 it must be ensured that the signal source is at a logical 0.
If, in the Safety commissioning mode, the signal source in p9705 is set - and it already has a logical 1 - then a test stop is immediately initiated and the messages C01711/C30711 are output with message value 1005.

r9710[0...1] SI Motion diagnostics result list 1 / SI Mtn res_list 1

SERVO_S110-DP, SERVO_S110-CAN, SERVO_S110-PN

Can be changed: -	**Calculated:** -	**Access level:** 3
Data type: Unsigned32	**Dyn. index:** -	**Func. diagram:** -
P-Group: Safety Integrated	**Unit group:** -	**Unit selection:** -
Not for motor type: -	**Scaling:** -	**Expert list:** 1
Min	**Max**	**Factory setting**
-	-	-

Description:
Displays result list 1 that, for the crosswise data comparison between the monitoring channels, led to the fault.

Index:
[0] = Result list second channel
[1] = Result list drive

Bit field:	Bit	Signal name	1 signal	0 signal	FP
	00	Actual value > upper limit SOS	Yes	No	-
	01	Actual value > lower limit SOS	Yes	No	-
	02	Actual value > upper limit SLP1	Yes	No	-
	03	Actual value > lower limit SLP1	Yes	No	-
	04	Actual value > upper limit SLP2	Yes	No	-
	05	Actual value > lower limit SLP2	Yes	No	-
	06	Actual value > upper limit SLS1	Yes	No	-
	07	Actual value > lower limit SLS1	Yes	No	-
	08	Actual value > upper limit SLS2	Yes	No	-
	09	Actual value > lower limit SLS2	Yes	No	-
	10	Actual value > upper limit SLS3	Yes	No	-
	11	Actual value > lower limit SLS3	Yes	No	-
	12	Actual value > upper limit SLS4	Yes	No	-
	13	Actual value > lower limit SLS4	Yes	No	-
	16	Actual value > upper limit SAM/SBR	Yes	No	-
	17	Actual value > lower limit SAM/SBR	Yes	No	-
	18	Actual value > upper limit SDI positive	Yes	No	-
	19	Actual value > lower limit SDI positive	Yes	No	-
	20	Actual value > upper limit SDI negative	Yes	No	-
	21	Actual value > lower limit SDI negative	Yes	No	-

Dependency: Refer to: C01711

Note: SBR: Safe Brake Ramp (safe brake ramp monitoring)
SLP: Safely-Limited Position
SLS: Safely-Limited Speed
SOS: Safe Operating Stop

r9711[0...1] SI Motion diagnostics result list 2 / SI Mtn res_list 2

SERVO_S110-DP, SERVO_S110-CAN, SERVO_S110-PN

Can be changed: -	**Calculated:** -	**Access level:** 3
Data type: Unsigned32	**Dyn. index:** -	**Func. diagram:** -
P-Group: Safety Integrated	**Unit group:** -	**Unit selection:** -
Not for motor type: -	**Scaling:** -	**Expert list:** 1
Min	**Max**	**Factory setting**
-	-	-

Description: Displays result list 2 that, for the crosswise data comparison between the monitoring channels, led to the fault.

Index: [0] = Result list second channel
[1] = Result list drive

Bit field:	Bit	Signal name	1 signal	0 signal	FP
	00	Actual value > upper limit SCA1+	Yes	No	-
	01	Actual value > lower limit SCA1+	Yes	No	-
	02	Actual value > upper limit SCA1-	Yes	No	-
	03	Actual value > lower limit SCA1-	Yes	No	-
	04	Actual value > upper limit SCA2+	Yes	No	-
	05	Actual value > lower limit SCA2+	Yes	No	-
	06	Actual value > upper limit SCA2-	Yes	No	-
	07	Actual value > lower limit SCA2-	Yes	No	-
	08	Actual value > upper limit SCA3+	Yes	No	-
	09	Actual value > lower limit SCA3+	Yes	No	-
	10	Actual value > upper limit SCA3-	Yes	No	-
	11	Actual value > lower limit SCA3-	Yes	No	-
	12	Actual value > upper limit SCA4+	Yes	No	-
	13	Actual value > lower limit SCA4+	Yes	No	-
	14	Actual value > upper limit SCA4-	Yes	No	-
	15	Actual value > lower limit SCA4-	Yes	No	-
	16	Actual value > upper limit SSM+	Yes	No	-
	17	Actual value > lower limit SSM+	Yes	No	-
	18	Actual value > upper limit SSM-	Yes	No	-
	19	Actual value > lower limit SSM-	Yes	No	-
	20	Actual value > upper limit modulo	Yes	No	-
	21	Actual value > lower limit modulo	Yes	No	-

Dependency: Refer to: C01711

Note: SCA: Safe Cam
SSM: Safe Speed Monitor (safety-relevant feedback signal from the velocity monitoring)

r9712 SI Motion diagnostics position actual value motor side / SI Mtn s_act mot

SERVO_S110-DP, SERVO_S110-CAN, SERVO_S110-PN

Can be changed: -	**Calculated:** -	**Access level:** 3
Data type: Unsigned32	**Dyn. index:** -	**Func. diagram:** -
P-Group: Safety Integrated	**Unit group:** -	**Unit selection:** -
Not for motor type: -	**Scaling:** -	**Expert list:** 1
Min	**Max**	**Factory setting**
-	-	-

Description: Displays the actual motor-side position actual value for the motion monitoring functions on the Control Unit.

r9713[0...3] SI Motion diagnostics position actual value load side / SI Mtn s_act load

SERVO_S110-DP, SERVO_S110-CAN, SERVO_S110-PN

Can be changed: -	**Calculated:** -	**Access level:** 3
Data type: Unsigned32	**Dyn. index:** -	**Func. diagram:** -
P-Group: Safety Integrated	**Unit group:** -	**Unit selection:** -
Not for motor type: -	**Scaling:** -	**Expert list:** 1
Min	**Max**	**Factory setting**
-	-	-

Description: Displays the actual load-side actual values of both monitoring channels and their difference.

Index: [0] = Load-side actual value on the Control Unit
[1] = Load-side actual value on the second channel
[2] = Load-side actual value difference Control Unit - second channel
[3] = Load-side max. actual value difference CU - second channel

Dependency: Refer to: r9724

Note: Re index 0:

The display of the load-side position actual value on the Control Unit is updated in the monitoring clock cycle.

Re index 1:

The display of the load-side position actual value on the second channel is updated in the CDC clock cycle (r9724) and delayed by one CDC clock cycle.

Re index 2:

The difference between the load-side position actual value on the Control Unit and load-side position actual value in the second channel is updated in the CDC clock cycle (r9724) and delayed by one CDC clock cycle.

Re index 3:

The maximum difference between the load-side position actual value on the Control Unit and the load-side position actual value on the second channel.

CDC: Crosswise Data Comparison

r9714[0...1] SI motion diagnostics velocity / SI Mtn diag v

SERVO_S110-DP, SERVO_S110-CAN, SERVO_S110-PN

Can be changed: -	**Calculated:** -	**Access level:** 3
Data type: FloatingPoint32	**Dyn. index:** -	**Func. diagram:** -
P-Group: Safety Integrated	**Unit group:** -	**Unit selection:** -
Not for motor type: -	**Scaling:** -	**Expert list:** 1
Min	**Max**	**Factory setting**
- [mm/min]	- [mm/min]	- [mm/min]

Description: Displays the velocity actual values for the motion monitoring functions on the Control Unit.

Index: [0] = Load-side velocity actual value on the Control Unit
[1] = Actual SAM/SBR velocity limit on the Control Unit

Note: For linear axes, the following unit applies: millimeters per minute

For rotary axes, the following unit applies: revolutions per minute

r9714[0...1] SI motion diagnostics velocity / SI Mtn diag v

SERVO_S110-DP (Safety rot), SERVO_S110-CAN (Safety rot), SERVO_S110-PN (Safety rot)

Can be changed: -	**Calculated:** -	**Access level:** 3
Data type: FloatingPoint32	**Dyn. index:** -	**Func. diagram:** -
P-Group: Safety Integrated	**Unit group:** -	**Unit selection:** -
Not for motor type: -	**Scaling:** -	**Expert list:** 1
Min	**Max**	**Factory setting**
- [rpm]	- [rpm]	- [rpm]

Description: Displays the velocity actual values for the motion monitoring functions on the Control Unit.

Index: [0] = Load-side velocity actual value on the Control Unit
[1] = Actual SAM/SBR velocity limit on the Control Unit

Note: For linear axes, the following unit applies: millimeters per minute
For rotary axes, the following unit applies: revolutions per minute

r9718.23 CO/BO: SI Motion control signals 1 / SI Mtn ctrl_sig 1

SERVO_S110-DP, SERVO_S110-CAN, SERVO_S110-PN

Can be changed: -	**Calculated:** -	**Access level:** 4
Data type: Unsigned32	**Dyn. index:** -	**Func. diagram:** -
P-Group: Safety Integrated	**Unit group:** -	**Unit selection:** -
Not for motor type: -	**Scaling:** -	**Expert list:** 1
Min	**Max**	**Factory setting**
-	-	-

Description: Control signal 1 for safety-relevant motion monitoring functions.

Bit field:

Bit	Signal name	1 signal	0 signal	FP
23	Set offset for TfS to the actual torque	Set	Reset	-

Note: TfS: Traverse to fixed stop

r9719.0...31 CO/BO: SI Motion control signals 2 / SI Mtn ctrl_sig 2

SERVO_S110-DP, SERVO_S110-CAN, SERVO_S110-PN

Can be changed: -	**Calculated:** -	**Access level:** 3
Data type: Unsigned32	**Dyn. index:** -	**Func. diagram:** -
P-Group: Safety Integrated	**Unit group:** -	**Unit selection:** -
Not for motor type: -	**Scaling:** -	**Expert list:** 1
Min	**Max**	**Factory setting**
-	-	-

Description: Control signal 2 for safety-relevant motion monitoring functions.

Bit field:

Bit	Signal name	1 signal	0 signal	FP
00	De-select SOS/SLS (SBH/SG)	Yes	No	-
01	De-select SOS (SBH)	Yes	No	-
03	Select SLS (SG) bit 0	Set	Not set	-
04	Select SLS (SG) bit 1	Set	Not set	-
05	Deselect SDI positive	Yes	No	-
06	Deselect SDI negative	Yes	No	-
08	Gearbox selection bit 0	Set	Not set	-
09	Gearbox selection bit 1	Set	Not set	-
10	Gearbox selection bit 2	Set	Not set	-
12	Select SLP (SE)	SLP2 (SE2)	SLP1 (SE1)	-
13	Close brake from control	Yes	No	-
15	Select test stop	Yes	No	-
16	SGE valid	Yes	No	-
18	De-select external STOP A	Yes	No	-
19	De-select external STOP C	Yes	No	-
20	De-select external STOP D	Yes	No	-
21	De-select external STOP E	Yes	No	-
28	SLS (SG) override bit 0	Set	Not set	-
29	SLS (SG) override bit 1	Set	Not set	-
30	SLS (SG) override bit 2	Set	Not set	-
31	SLS (SG) override bit 3	Set	Not set	-

Note: Re r9719.0 and r9719.1:
These two bits must be considered together.
- if SOS/SLS (SBH/SG) is de-selected using bit 0, then assignment of bit 1 is irrelevant.
- if SOS/SLS (SBH/SG) is selected using bit 0, then a changeover is made between SOS (SBH) and SLS (SG) using bit 1.

SLP: Safely-Limited Position / SE: Safe software limit switches
SLS: Safely-Limited Speed / SG: Safely reduced speed
SOS: Safe Operating Stop / SBH: Safe operating stop
SDI: Safe Direction (safe motion direction)

r9720.0...13 CO/BO: SI Motion control signals integrated in the drive / SI Mtn integ STW

SERVO_S110-DP, SERVO_S110-CAN, SERVO_S110-PN

Can be changed: -	**Calculated:** -	**Access level:** 3
Data type: Unsigned32	**Dyn. index:** -	**Func. diagram:** 2840, 2855
P-Group: Safety Integrated	**Unit group:** -	**Unit selection:** -
Not for motor type: -	**Scaling:** -	**Expert list:** 1
Min	**Max**	**Factory setting**
-	-	-

Description: Control signals for safety-relevant motion monitoring functions integrated in the drive.

Bit field:

Bit	Signal name	1 signal	0 signal	FP
00	De-select STO	Yes	No	-
01	De-select SS1	Yes	No	-
02	De-select SS2	Yes	No	-
03	De-select SOS	Yes	No	-
04	De-select SLS	Yes	No	-
07	Acknowledgement	Signal edge active	No	-
09	Select SLS bit 0	Set	Not set	-
10	Select SLS bit 1	Set	Not set	-
12	Deselect SDI positive	Yes	No	2861
13	Deselect SDI negative	Yes	No	2861

Note: This parameter is only supplied with actual values in the case of Safety Integrated Extended Functions. For Safety Integrated Basic Functions (SBC, SS1, STO), the value is equal to zero.

r9721.0...15 CO/BO: SI Motion status signals / SI Mtn stat_sig

SERVO_S110-DP, SERVO_S110-CAN, SERVO_S110-PN

Can be changed: -	**Calculated:** -	**Access level:** 3
Data type: Unsigned32	**Dyn. index:** -	**Func. diagram:** -
P-Group: Safety Integrated	**Unit group:** -	**Unit selection:** -
Not for motor type: -	**Scaling:** -	**Expert list:** 1
Min	**Max**	**Factory setting**
-	-	-

Description: Status signal for safety-relevant motion monitoring functions.

Bit field:

Bit	Signal name	1 signal	0 signal	FP
00	SOS or SLS active	Yes	No	-
01	SOS active	Yes	No	-
02	Pulse enable	Deleted	Enabled	-
03	Active SLS stage bit 0	Set	Not set	-
04	Active SLS stage bit 1	Set	Not set	-
05	Velocity below limit value n_x	Yes	No	-
06	Status signals valid	Yes	No	-
07	Safely referenced	Yes	No	-
08	SDI pos active	Yes	No	-
09	SDI neg active	Yes	No	-
12	STOP A or B active	Yes	No	-
13	STOP C active	Yes	No	-
14	STOP D active	Yes	No	-
15	STOP E active	Yes	No	-

Note: This parameter is only supplied with actual values in the case of Safety Integrated Extended Functions. For Safety Integrated Basic Functions (SBC, SS1, STO), the value is equal to zero.

r9722.0...15 CO/BO: SI Motion status signals integrated in the drive / SI Mtn integ stat

SERVO_S110-DP, SERVO_S110-CAN, SERVO_S110-PN

Can be changed: -	**Calculated:** -	**Access level:** 3
Data type: Unsigned32	**Dyn. index:** -	**Func. diagram:** 2840, 2855
P-Group: Safety Integrated	**Unit group:** -	**Unit selection:** -
Not for motor type: -	**Scaling:** -	**Expert list:** 1
Min	**Max**	**Factory setting**
-	-	-

Description: Status signal for safety-relevant motion monitoring functions integrated in the drive.

Bit field:

Bit	Signal name	1 signal	0 signal	FP
00	STO active	Yes	No	-
01	SS1 active	Yes	No	-
02	SS2 active	Yes	No	-
03	SOS active	Yes	No	-
04	SLS active	Yes	No	-
07	Internal event	No	Yes	-
09	Active SLS stage bit 0	Set	Not set	-
10	Active SLS stage bit 1	Set	Not set	-
11	SOS selected	Yes	No	-
12	SDI pos active	Yes	No	2861
13	SDI neg active	Yes	No	2861
15	SSM (speed below limit value)	Yes	No	2860

Notice: Re bit 07:

The signal state behaves in an opposite way to the PROFIsafe Standard.

Note: This parameter is only supplied with actual values in the case of Safety Integrated Extended Functions. For Safety Integrated Basic Functions (SBC, SS1, STO), the value is equal to zero.

Re bit 07:

An internal event is displayed if a STOP A ... F is active.

r9723.0...16 CO/BO: SI Motion diagnostic signals integrated in the drive / SI Mtn integ diag

SERVO_S110-DP, SERVO_S110-CAN, SERVO_S110-PN

Can be changed: -	**Calculated:** -	**Access level:** 3
Data type: Unsigned32	**Dyn. index:** -	**Func. diagram:** -
P-Group: Safety Integrated	**Unit group:** -	**Unit selection:** -
Not for motor type: -	**Scaling:** -	**Expert list:** 1
Min	**Max**	**Factory setting**
-	-	-

Description: Displays the diagnostic signals for safety-relevant motion monitoring functions integrated in the drive.

Bit field:

Bit	Signal name	1 signal	0 signal	FP
00	Forced checking procedure required	Yes	No	-
01	For ESR, STOP F and subsequent stop B is active	Yes	No	-
02	Communication failure	Yes	No	-
03	Actual value sensing supplies valid value	Yes	No	-
04	Encoderless act val sensing acc to technique for U/f control	Yes	No	-
16	SAM/SBR active	Yes	No	-

Note: ESR: Extended Stop and Retract

SAM: Safe Acceleration Monitor (safe acceleration monitoring)

SBR: Safe Brake Ramp (safe brake ramp monitoring)

r9724 SI Motion crosswise comparison clock cycle / SI Mtn CDC clk cyc

SERVO_S110-DP, SERVO_S110-CAN, SERVO_S110-PN

Can be changed: -	**Calculated:** -	**Access level:** 3
Data type: FloatingPoint32	**Dyn. index:** -	**Func. diagram:** -
P-Group: Safety Integrated	**Unit group:** -	**Unit selection:** -
Not for motor type: -	**Scaling:** -	**Expert list:** 1
Min	**Max**	**Factory setting**
- [ms]	- [ms]	- [ms]

Description: Displays the crosswise comparison clock cycle.
The value indicates the clock cycle time with which each individual CDC value is compared between the two monitoring channels.

Dependency: Refer to: p9500

Note: Crosswise comparison clock cycle = monitoring clock cycle (p9500) * number of data to be crosswise compared
CDC: Crosswise Data Comparison

r9725[0...2] SI Motion diagnostics STOP F / SI Mtn Diag STOP F

SERVO_S110-DP, SERVO_S110-CAN, SERVO_S110-PN

Can be changed: -	**Calculated:** -	**Access level:** 3
Data type: Unsigned32	**Dyn. index:** -	**Func. diagram:** -
P-Group: Safety Integrated	**Unit group:** -	**Unit selection:** -
Not for motor type: -	**Scaling:** -	**Expert list:** 1
Min	**Max**	**Factory setting**
-	-	-

Description: Re index 0:
Displays the message value that resulted in the STOP F on the drive.
Value = 0:
The Control Unit signaled a STOP F.
Value = 1 ... 999:
Number of the incorrect date in the crosswise data comparison between the monitoring channels.
Value >= 1000:
Additional diagnostic values of the drive.
Re index 1:
Displays the value of the Control Unit that resulted in the STOP F.
Re index 2:
Displays the value from the second channel that resulted in the STOP F.

Index: [0] = Message value for CDC
[1] = Control Unit CDC actual value
[2] = Components CDC actual value

Dependency: Refer to: C01711

Note: The significance of the individual message values is described in message C01711.
CDC: Crosswise Data Comparison

p9726 SI Motion user agreement selection/de-selection / SI Mtn UserAgr sel

SERVO_S110-DP, SERVO_S110-CAN, SERVO_S110-PN

Can be changed: U, T	**Calculated:** -	**Access level:** 4
Data type: Integer16	**Dyn. index:** -	**Func. diagram:** -
P-Group: Safety Integrated	**Unit group:** -	**Unit selection:** -
Not for motor type: -	**Scaling:** -	**Expert list:** 1
Min	**Max**	**Factory setting**
0000 hex	00AC hex	0000 hex

Description: Setting to select and de-select the user agreement.

Value: 0: [00 hex] De-select user agreement
172: [AC hex] Select user agreement

Dependency: Refer to: r9727

r9727 SI Motion user agreement inside the drive / SI Mtn UserAgr int

SERVO_S110-DP, SERVO_S110-CAN, SERVO_S110-PN

Can be changed: -	**Calculated:** -	**Access level:** 4
Data type: Integer16	**Dyn. index:** -	**Func. diagram:** -
P-Group: Safety Integrated	**Unit group:** -	**Unit selection:** -
Not for motor type: -	**Scaling:** -	**Expert list:** 1
Min	**Max**	**Factory setting**
-	-	-

Description: Displays the internal state of the user agreement.
Value = 0: User agreement is not set.
Value = AC hex: User agreement is set.

Dependency: Refer to: p9726

r9728[0...2] SI Motion actual checksum SI parameters / SI Mtn act CRC

SERVO_S110-DP, SERVO_S110-CAN, SERVO_S110-PN

Can be changed: -	**Calculated:** -	**Access level:** 3
Data type: Unsigned32	**Dyn. index:** -	**Func. diagram:** -
P-Group: Safety Integrated	**Unit group:** -	**Unit selection:** -
Not for motor type: -	**Scaling:** -	**Expert list:** 1
Min	**Max**	**Factory setting**
-	-	-

Description: Displays the checksum over the checked Safety Integrated parameters of the motion monitoring functions (actual checksum).

Index: [0] = Checksum over SI parameters for motion monitoring
[1] = Checksum over SI parameters for actual values
[2] = Checksum over SI parameters for hardware

Dependency: Refer to: p9729
Refer to: F01680

p9729[0...2] SI Motion reference checksum SI parameters / SI Mtn ref CRC

SERVO_S110-DP, SERVO_S110-CAN, SERVO_S110-PN

Can be changed: C2(95)	**Calculated:** -	**Access level:** 3
Data type: Unsigned32	**Dyn. index:** -	**Func. diagram:** -
P-Group: Safety Integrated	**Unit group:** -	**Unit selection:** -
Not for motor type: -	**Scaling:** -	**Expert list:** 1
Min	**Max**	**Factory setting**
0000 hex	FFFF FFFF hex	0000 hex

Description: Sets the checksum using the checksum-tested Safety Integrated parameters for motion monitoring functions (reference checksum).

Index: [0] = Checksum over SI parameters for motion monitoring
[1] = Checksum over SI parameters for actual values
[2] = Checksum over SI parameters for hardware

Dependency: Refer to: r9728
Refer to: F01680

r9730 SI Motion Safe maximum velocity / SI mtn safe v_Max

SERVO_S110-DP, SERVO_S110-CAN, SERVO_S110-PN

Can be changed: -	**Calculated:** -	**Access level:** 3
Data type: FloatingPoint32	**Dyn. index:** -	**Func. diagram:** -
P-Group: Safety Integrated	**Unit group:** -	**Unit selection:** -
Not for motor type: -	**Scaling:** -	**Expert list:** 1
Min	**Max**	**Factory setting**
- [mm/min]	- [mm/min]	- [mm/min]

Description: Displays the safe maximum velocity (on the load side) that is permissible for the safe motion monitoring functions as a result of the actual value sensing.
This parameter is only of significance for enabled safety with encoder. Otherwise, it is set to "0".

Note: If the value displayed is exceeded, message C01711 is output indicating relevant subsequent faults.

r9730 SI Motion Safe maximum velocity / SI mtn safe v_Max

SERVO_S110-DP (Safety rot), SERVO_S110-CAN (Safety rot), SERVO_S110-PN (Safety rot)

Can be changed: -	**Calculated:** -	**Access level:** 3
Data type: FloatingPoint32	**Dyn. index:** -	**Func. diagram:** -
P-Group: Safety Integrated	**Unit group:** -	**Unit selection:** -
Not for motor type: -	**Scaling:** -	**Expert list:** 1
Min	**Max**	**Factory setting**
- [rpm]	- [rpm]	- [rpm]

Description: Displays the safe maximum velocity (on the load side) that is permissible for the safe motion monitoring functions as a result of the actual value sensing.

This parameter is only of significance for enabled safety with encoder. Otherwise, it is set to "0".

Note: If the value displayed is exceeded, message C01711 is output indicating relevant subsequent faults.

r9731 SI Motion safe position accuracy / SI Mtn pos acc

SERVO_S110-DP, SERVO_S110-CAN, SERVO_S110-PN

Can be changed: -	**Calculated:** -	**Access level:** 3
Data type: FloatingPoint32	**Dyn. index:** -	**Func. diagram:** -
P-Group: Safety Integrated	**Unit group:** -	**Unit selection:** -
Not for motor type: -	**Scaling:** -	**Expert list:** 1
Min	**Max**	**Factory setting**
- [mm]	- [mm]	- [mm]

Description: Displays the safe position accuracy (on the load side) that can be achieved as a maximum for the safe motion monitoring functions as a result of the actual value sensing. This parameter is only of significance for enabled safety with encoder. Otherwise, it is set to "0".

r9731 SI Motion safe position accuracy / SI Mtn pos acc

SERVO_S110-DP (Safety rot), SERVO_S110-CAN (Safety rot), SERVO_S110-PN (Safety rot)

Can be changed: -	**Calculated:** -	**Access level:** 3
Data type: FloatingPoint32	**Dyn. index:** -	**Func. diagram:** -
P-Group: Safety Integrated	**Unit group:** -	**Unit selection:** -
Not for motor type: -	**Scaling:** -	**Expert list:** 1
Min	**Max**	**Factory setting**
- [°]	- [°]	- [°]

Description: Displays the safe position accuracy (on the load side) that can be achieved as a maximum for the safe motion monitoring functions as a result of the actual value sensing. This parameter is only of significance for enabled safety with encoder. Otherwise, it is set to "0".

r9732 SI Motion velocity resolution / SI Mtn v_res

SERVO_S110-DP, SERVO_S110-CAN, SERVO_S110-PN

Can be changed: -	**Calculated:** -	**Access level:** 3
Data type: FloatingPoint32	**Dyn. index:** -	**Func. diagram:** -
P-Group: Safety Integrated	**Unit group:** -	**Unit selection:** -
Not for motor type: -	**Scaling:** -	**Expert list:** 1
Min	**Max**	**Factory setting**
- [mm/min]	- [mm/min]	- [mm/min]

Description: Displays the safe velocity resolution (load side).

Setpoints for velocity limits or parameter changes for velocities below this threshold have no effect.

Note: This parameter does not provide any information about the actual accuracy of the velocity sensing. This depends on the type of actual value sensing, the gear factors as well as the quality of the encoder being used.

r9732 SI Motion velocity resolution / SI Mtn v_res

SERVO_S110-DP (Safety rot), SERVO_S110-CAN (Safety rot), SERVO_S110-PN (Safety rot)

Can be changed: -	**Calculated:** -	**Access level:** 3
Data type: FloatingPoint32	**Dyn. index:** -	**Func. diagram:** -
P-Group: Safety Integrated	**Unit group:** -	**Unit selection:** -
Not for motor type: -	**Scaling:** -	**Expert list:** 1
Min	**Max**	**Factory setting**
- [rpm]	- [rpm]	- [rpm]

Description: Displays the safe velocity resolution (load side).

Setpoints for velocity limits or parameter changes for velocities below this threshold have no effect.

Note: This parameter does not provide any information about the actual accuracy of the velocity sensing. This depends on the type of actual value sensing, the gear factors as well as the quality of the encoder being used.

r9733[0...2] CO: SI Motion setpoint speed limit effective / SI Mtn setp_lim

SERVO_S110-DP, SERVO_S110-CAN, SERVO_S110-PN

Can be changed: -	**Calculated:** -	**Access level:** 3
Data type: FloatingPoint32	**Dyn. index:** -	**Func. diagram:** 2820, 2861
P-Group: Safety Integrated	**Unit group:** 3_1	**Unit selection:** p0505
Not for motor type: -	**Scaling:** p2000	**Expert list:** 1
Min	**Max**	**Factory setting**
- [rpm]	- [rpm]	- [rpm]

Description: Displays the necessary setpoint speed limit as a result of the selected motion monitoring functions.

Contrary to the parameterization of the SI limit values, this parameter specifies the motor-side limit value and not the load-side limit value.

Index: [0] = Setpoint limiting positive
[1] = Setpoint limiting negative
[2] = Setpoint limit absolute

Dependency: For SLS: r9733[0] = p9531[x] x p9533 (converted from the load side to the motor side)

For SDI negative: r9733[0] = 0

For SLS: r9733[1] = - p9531[x] x p9533 (converted from the load side to the motor side)

For SDI positive: r9733[1] = 0

[x] = Selected SLS stage

Conversion factor from the motor side to the load side:

- motor type = rotary and axis type = linear: p9522 / (p9521 x p9520)

- otherwise: p9522 / p9521

Refer to: p9531, p9533

Notice: If p1051 = r9733[0] is interconnected, p1052 = r9733[1] must also be interconnected.

If only the absolute value of the setpoint velocity limiting is required, r9733[2] must be interconnected.

Note: The unit changeover between linear and rotary axis is not implemented via the safety changeover (p9502) but by the linear motor changeover.

If the "SLS" or "SDI" function is not selected, r9733[0] shows p1082 and r9733[1] shows -p1082.

The display in r9733 can be delayed by up to one Safety monitoring clock cycle as compared to the display in r9719/r9720 and r9721/r9722.

r9734.0...15 CO/BO: SI Motion Safety Info Channel status word / SI Mtn info ch ZSW

SERVO_S110-DP, SERVO_S110-CAN, SERVO_S110-PN

Can be changed: -	**Calculated:** -	**Access level:** 3
Data type: Unsigned16	**Dyn. index:** -	**Func. diagram:** -
P-Group: Safety Integrated	**Unit group:** -	**Unit selection:** -
Not for motor type: -	**Scaling:** -	**Expert list:** 1
Min	**Max**	**Factory setting**
-	-	-

Description: Displays the status word for the Safety information channel.

Bit field:

Bit	Signal name	1 signal	0 signal	FP
00	STO active	Yes	No	-
01	SS1 active	Yes	No	-
02	SS2 active	Yes	No	-

03	SOS active	Yes	No	-
04	SLS active	Yes	No	-
05	SOS selected	Yes	No	-
06	SLS selected	Yes	No	-
07	Internal event	Yes	No	-
12	SDI positive selected	Yes	No	-
13	SDI neg selected	Yes	No	-
14	ESR retract requested	Yes	No	-
15	Safety message present	Yes	No	-

Note: This parameter is only supplied with actual values in the case of Safety Integrated Extended Functions. For Safety Integrated Basic Functions (SBC, SS1, STO), the value is equal to zero.

Re bit 07:

An internal event is displayed if a STOP A ... F is active.

r9742.0...15 CO/BO: SI Motion drive-integrated status signals (processor 2) / SI Mtn int st P2

SERVO_S110-DP, SERVO_S110-CAN, SERVO_S110-PN

Can be changed: - **Calculated:** - **Access level:** 4
Data type: Unsigned32 **Dyn. index:** - **Func. diagram:** -
P-Group: Safety Integrated **Unit group:** - **Unit selection:** -
Not for motor type: - **Scaling:** - **Expert list:** 1

Min	Max	Factory setting
-	-	-

Description: Status signal for safety-relevant motion monitoring functions integrated in the drive.

Bit field:

Bit	Signal name	1 signal	0 signal	FP
00	STO active	Yes	No	-
01	SS1 active	Yes	No	-
02	SS2 active	Yes	No	-
03	SOS active	Yes	No	-
04	SLS active	Yes	No	-
07	Internal event	No	Yes	-
09	Active SLS stage bit 0	Set	Not set	-
10	Active SLS stage bit 1	Set	Not set	-
11	SOS selected	Yes	No	-
12	SDI pos active	Yes	No	2861
13	SDI neg active	Yes	No	2861
15	SSM (speed below limit value)	Yes	No	2860

Notice: Re bit 07:

An internal event is displayed if a STOP A ... F is active.

The signal state behaves in an opposite way to the PROFIsafe Standard.

Note: This parameter is only supplied with actual values in the case of Safety Integrated Extended Functions. For Safety Integrated Basic Functions (SBC, SS1, STO), the value is equal to zero.

r9744 SI message buffer changes, counter / SI msg_buffer chng

SERVO_S110-DP, SERVO_S110-CAN, SERVO_S110-PN

Can be changed: - **Calculated:** - **Access level:** 3
Data type: Unsigned16 **Dyn. index:** - **Func. diagram:** -
P-Group: Messages **Unit group:** - **Unit selection:** -
Not for motor type: - **Scaling:** - **Expert list:** 1

Min	Max	Factory setting
-	-	-

Description: Displays the changes of the safety message buffer. This counter is incremented every time that the safety message buffer changes.

Recommendation: This is used to check whether the safety message buffer has been read out consistently.

Dependency: Refer to: r9747, r9748, r9749, p9752, r9753, r9754, r9755, r9756

r9745[0...63] SI component number / SI comp_no

SERVO_S110-DP, SERVO_S110-CAN, SERVO_S110-PN

Can be changed: -	**Calculated:** -	**Access level:** 3
Data type: Unsigned32	**Dyn. index:** -	**Func. diagram:** -
P-Group: Messages	**Unit group:** -	**Unit selection:** -
Not for motor type: -	**Scaling:** -	**Expert list:** 1
Min	**Max**	**Factory setting**
-	-	-

Description: Displays the component number of the safety message that has occurred.

Note: Value = 0: Assignment to a component not possible.

r9747[0...63] SI message code / SI msg_code

SERVO_S110-DP, SERVO_S110-CAN, SERVO_S110-PN

Can be changed: -	**Calculated:** -	**Access level:** 3
Data type: Unsigned16	**Dyn. index:** -	**Func. diagram:** -
P-Group: Messages	**Unit group:** -	**Unit selection:** -
Not for motor type: -	**Scaling:** -	**Expert list:** 1
Min	**Max**	**Factory setting**
-	-	-

Description: Displays the numbers of safety messages that have occurred.

Dependency: Refer to: r9744, r9748, r9749, p9752, r9753, r9754, r9755, r9756

Note: The messages type "safety message" (Cxxxxx) are entered in the message fault buffer.

Message buffer structure (principle):

r9747[0], r9748[0], r9749[0], r9753[0], r9754[0], r9755[0], r9756[0] --> Actual message case, safety message 1

...

r9747[7], r9748[7], r9749[7], r9753[7], r9754[7], r9755[7], r9756[7] --> Actual message case, safety message 8

r9747[8], r9748[8], r9749[8], r9753[8], r9754[8], r9755[8], r9756[8] --> 1st acknowledged message case, safety message 1

...

r9747[15], r9748[15], r9749[15], r9753[15], r9754[15], r9755[15], r9756[15] --> 1st acknowledged message case, safety message 8

...

r9747[56], r9748[56], r9749[56], r9753[56], r9754[56], r9755[56], r9756[56] --> 7th acknowledged message case, safety message 1

...

r9747[63], r9748[63], r9749[63], r9753[63], r9754[63], r9755[63], r9756[63] --> 7th acknowledged message case, safety message 8

r9748[0...63] SI message time received in milliseconds / SI t_msg recv ms

SERVO_S110-DP, SERVO_S110-CAN, SERVO_S110-PN

Can be changed: -	**Calculated:** -	**Access level:** 3
Data type: Unsigned32	**Dyn. index:** -	**Func. diagram:** -
P-Group: Messages	**Unit group:** -	**Unit selection:** -
Not for motor type: -	**Scaling:** -	**Expert list:** 1
Min	**Max**	**Factory setting**
- [ms]	- [ms]	- [ms]

Description: Displays the relative system runtime in milliseconds when the safety message occurred.

Dependency: Refer to: r9744, r9747, r9749, p9752, r9753, r9754, r9755, r9756

r9749[0...63] SI message value / SI msg_value

SERVO_S110-DP, SERVO_S110-CAN, SERVO_S110-PN

Can be changed: -	**Calculated:** -	**Access level:** 3
Data type: Integer32	**Dyn. index:** -	**Func. diagram:** -
P-Group: Messages	**Unit group:** -	**Unit selection:** -
Not for motor type: -	**Scaling:** -	**Expert list:** 1
Min	**Max**	**Factory setting**
-	-	-

Description: Displays the additional information about the safety message that occurred (as integer number).

Dependency: Refer to: r9744, r9747, r9748, p9752, r9753, r9754, r9755, r9756

r9750[0...63] SI diagnostic attributes / SI diag_attr

SERVO_S110-DP, SERVO_S110-CAN, SERVO_S110-PN

Can be changed: -	**Calculated:** -	**Access level:** 3
Data type: Unsigned32	**Dyn. index:** -	**Func. diagram:** -
P-Group: Messages	**Unit group:** -	**Unit selection:** -
Not for motor type: -	**Scaling:** -	**Expert list:** 1
Min	**Max**	**Factory setting**
-	-	-

Description: Displays the diagnostic attributes of the safety messages that have occurred.

Bit field:

Bit	Signal name	1 signal	0 signal	FP
00	Hardware replacement recommended	Yes	No	-

p9752 SI message cases counter / SI msg_cases count

SERVO_S110-DP, SERVO_S110-CAN, SERVO_S110-PN

Can be changed: U, T	**Calculated:** -	**Access level:** 3
Data type: Unsigned16	**Dyn. index:** -	**Func. diagram:** -
P-Group: Messages	**Unit group:** -	**Unit selection:** -
Not for motor type: -	**Scaling:** -	**Expert list:** 1
Min	**Max**	**Factory setting**
0	65535	0

Description: Number of safety messages that have occurred since the last reset.

Dependency: The safety message buffer is cleared by resetting the parameter to 0.
Refer to: r9744, r9747, r9748, r9749, r9753, r9754, r9755, r9756

Note: The parameter is reset to 0 at POWER ON.

r9753[0...63] SI message value for float values / SI msg_val float

SERVO_S110-DP, SERVO_S110-CAN, SERVO_S110-PN

Can be changed: -	**Calculated:** -	**Access level:** 3
Data type: FloatingPoint32	**Dyn. index:** -	**Func. diagram:** -
P-Group: Messages	**Unit group:** -	**Unit selection:** -
Not for motor type: -	**Scaling:** -	**Expert list:** 1
Min	**Max**	**Factory setting**
-	-	-

Description: Displays additional information about the safety message that has occurred for float values.

Dependency: Refer to: r9744, r9747, r9748, r9749, p9752, r9754, r9755, r9756

r9754[0...63] SI message time received in days / SI t_msg recv days

SERVO_S110-DP, SERVO_S110-CAN, SERVO_S110-PN

Can be changed: -	**Calculated:** -	**Access level:** 3
Data type: Unsigned16	**Dyn. index:** -	**Func. diagram:** -
P-Group: Messages	**Unit group:** -	**Unit selection:** -
Not for motor type: -	**Scaling:** -	**Expert list:** 1
Min	**Max**	**Factory setting**
-	-	-

Description: Displays the relative system runtime in days when the safety message occurred.

Dependency: Refer to: r9744, r9747, r9748, r9749, p9752, r9753, r9755, r9756

r9755[0...63] SI message time removed in milliseconds / SI t_msg rem ms

SERVO_S110-DP, SERVO_S110-CAN, SERVO_S110-PN

Can be changed: -	**Calculated:** -	**Access level:** 3
Data type: Unsigned32	**Dyn. index:** -	**Func. diagram:** -
P-Group: Messages	**Unit group:** -	**Unit selection:** -
Not for motor type: -	**Scaling:** -	**Expert list:** 1
Min	**Max**	**Factory setting**
- [ms]	- [ms]	- [ms]

Description: Displays the relative system runtime in milliseconds when the safety message was removed.
Dependency: Refer to: r9744, r9747, r9748, r9749, p9752, r9753, r9754, r9756

r9756[0...63] SI message time removed in days / SI t_msg rem days

SERVO_S110-DP, SERVO_S110-CAN, SERVO_S110-PN

Can be changed: -	**Calculated:** -	**Access level:** 3
Data type: Unsigned16	**Dyn. index:** -	**Func. diagram:** -
P-Group: Messages	**Unit group:** -	**Unit selection:** -
Not for motor type: -	**Scaling:** -	**Expert list:** 1
Min	**Max**	**Factory setting**
-	-	-

Description: Displays the relative system runtime in days when the safety message was removed.
Dependency: Refer to: r9744, r9747, r9748, r9749, p9752, r9753, r9754, r9755

p9761 SI password input / SI password inp

SERVO_S110-DP, SERVO_S110-CAN, SERVO_S110-PN

Can be changed: C1, T	**Calculated:** -	**Access level:** 3
Data type: Unsigned32	**Dyn. index:** -	**Func. diagram:** 2800
P-Group: Safety Integrated	**Unit group:** -	**Unit selection:** -
Not for motor type: -	**Scaling:** -	**Expert list:** 1
Min	**Max**	**Factory setting**
0000 hex	FFFF FFFF hex	0000 hex

Description: Enters the Safety Integrated password.
Dependency: Refer to: F01659
Note: It is not possible to change Safety Integrated parameters until the Safety Integrated password has been entered.

p9762 SI password new / SI password new

SERVO_S110-DP, SERVO_S110-CAN, SERVO_S110-PN

Can be changed: C2(95)	**Calculated:** -	**Access level:** 3
Data type: Unsigned32	**Dyn. index:** -	**Func. diagram:** 2800
P-Group: Safety Integrated	**Unit group:** -	**Unit selection:** -
Not for motor type: -	**Scaling:** -	**Expert list:** 1
Min	**Max**	**Factory setting**
0000 hex	FFFF FFFF hex	0000 hex

Description: Enters a new Safety Integrated password.
Dependency: A change made to the Safety Integrated password must be acknowledged in the following parameter:
Refer to: p9763

p9763 SI password acknowledgement / SI ackn password

SERVO_S110-DP, SERVO_S110-CAN, SERVO_S110-PN

Can be changed: C2(95)	**Calculated:** -	**Access level:** 3
Data type: Unsigned32	**Dyn. index:** -	**Func. diagram:** 2800
P-Group: Safety Integrated	**Unit group:** -	**Unit selection:** -
Not for motor type: -	**Scaling:** -	**Expert list:** 1
Min	**Max**	**Factory setting**
0000 hex	FFFF FFFF hex	0000 hex

Description: Acknowledges the new Safety Integrated password.

Dependency: Refer to: p9762

Note: The new password entered into p9762 must be re-entered in order to acknowledge.
p9762 = p9763 = 0 is automatically set after the new Safety Integrated password has been successfully acknowledged.

r9765 SI Motion forced check procedure remaining time (Control Unit) / SI Mtn dyn remain

SERVO_S110-DP, SERVO_S110-CAN, SERVO_S110-PN

Can be changed: -	**Calculated:** -	**Access level:** 3
Data type: FloatingPoint32	**Dyn. index:** -	**Func. diagram:** -
P-Group: Safety Integrated	**Unit group:** -	**Unit selection:** -
Not for motor type: -	**Scaling:** -	**Expert list:** 1
Min	**Max**	**Factory setting**
- [h]	- [h]	- [h]

Description: Displays the time remaining until the next dynamization and testing of the safety motion monitoring functions integrated in the drives.
The signal source to initiate the forced checking procedure is parameterized in p9705.

Dependency: Refer to: p9705
Refer to: C01798

r9770[0...3] SI vers. safety fcts that run indep. in the drive (processor 1) / SI version Drv P1

SERVO_S110-DP, SERVO_S110-CAN, SERVO_S110-PN

Can be changed: -	**Calculated:** -	**Access level:** 3
Data type: Unsigned16	**Dyn. index:** -	**Func. diagram:** 2802
P-Group: Safety Integrated	**Unit group:** -	**Unit selection:** -
Not for motor type: -	**Scaling:** -	**Expert list:** 1
Min	**Max**	**Factory setting**
-	-	-

Description: Displays the Safety Integrated version for the drive-integrated safety functions on processor 1.

Index: [0] = Safety Version (major release)
[1] = Safety Version (minor release)
[2] = Safety Version (baselevel or patch)
[3] = Safety Version (hotfix)

Dependency: Refer to: r9890

Note: Example:
r9770[0] = 2, r9770[1] = 60, r9770[2] = 1, r9770[3] = 0 --> Safety version V02.60.01.00

r9771 SI common functions (processor 1) / SI general fct P1

SERVO_S110-DP, SERVO_S110-CAN, SERVO_S110-PN

Can be changed: -	**Calculated:** -	**Access level:** 3
Data type: Unsigned32	**Dyn. index:** -	**Func. diagram:** 2804
P-Group: Safety Integrated	**Unit group:** -	**Unit selection:** -
Not for motor type: -	**Scaling:** -	**Expert list:** 1
Min	**Max**	**Factory setting**
-	-	-

Description: Displays the Safety Integrated monitoring functions supported on processor 1 and processor 2.
Processor 1 determines this display.

Bit field:

Bit	Signal name	1 signal	0 signal	FP
00	STO supported via terminals	Yes	No	2804
01	SBC supported	Yes	No	2804
02	Extended Functions supported (p9501 > 0)	Yes	No	2804
03	SS1 supported	Yes	No	2804
04	Extended Functions PROFIsafe supported	Yes	No	-
05	Extended Functions integrated in drive supported (p9601.2 = 1)	Yes	No	-
06	Basic Functions PROFIsafe supported	Yes	No	-
07	Extended Functions encoderless supported	Yes	No	-
08	Safe Brake Adapter supported	Yes	No	-
09	Basic Functions PROFIsafe for parallel connection supported	Yes	No	-

10	Extended Functions integrated in drive for parallel connection	Yes	No	-
11	Extended Functions SDI supported	Yes	No	-
12	Extended Functions SSM encoderless supported	Yes	No	-

Dependency: Refer to: r9871

Note: SBC: Safe Brake Control
SS1: Safe Stop 1
STO: Safe Torque Off

r9772.0...23 CO/BO: SI status (processor 1) / SI status P1

SERVO_S110-DP, SERVO_S110-CAN, SERVO_S110-PN

Can be changed: -	**Calculated:** -	**Access level:** 2
Data type: Unsigned32	**Dyn. index:** -	**Func. diagram:** 2804
P-Group: Safety Integrated	**Unit group:** -	**Unit selection:** -
Not for motor type: -	**Scaling:** -	**Expert list:** 1
Min	**Max**	**Factory setting**
-	-	-

Description: Displays the Safety Integrated status on processor 1.

Bit field:

Bit	Signal name	1 signal	0 signal	FP
00	STO selected on Control Unit	Yes	No	2810
01	STO active on Control Unit	Yes	No	2810
02	SS1 delay time active on the Control Unit	Yes	No	2810
04	SBC requested	Yes	No	2814
05	SS1 selected on the Control Unit (Basic Functions)	Yes	No	-
06	SS1 active on the Control Unit (Basic Functions)	Yes	No	-
09	STOP A cannot be acknowledged active	Yes	No	2802
10	STOP A active	Yes	No	2802
15	STOP F active	Yes	No	2802
16	STO cause: Safety comm. mode	Yes	No	-
17	STO cause selection via terminal (Basic Functions)	Yes	No	-
18	STO cause: selection via SMM	Yes	No	-
19	STO cause actual value missing	Yes	No	-
20	STO cause selection PROFIsafe (Basic Functions)	Yes	No	-
22	SS1 cause selection terminal (Basic Functions)	Yes	No	-
23	SS1 cause selection PROFIsafe (Basic Functions)	Yes	No	-

Dependency: Refer to: r9872

Note: Re bit 00:
When STO is selected, the cause is displayed in bits 16 ... 20.
Re bit 05:
When SS1 is selected, the cause is displayed in bits 22 and 23.
Re bit 18:
When the bit is set, STO is selected via PROFIsafe.
Re bit 19:
With SMM encoderless no actual value sensing is possible on account of OFF2.
With SMM with encoder no actual value sensing is possible on account of parking.
SMM: Safe Motion Monitoring

r9773.0...31 CO/BO: SI status (processor 1 + processor 2) / SI status P1+P2

SERVO_S110-DP, SERVO_S110-CAN, SERVO_S110-PN

Can be changed: -	**Calculated:** -	**Access level:** 2
Data type: Unsigned32	**Dyn. index:** -	**Func. diagram:** 2804
P-Group: Safety Integrated	**Unit group:** -	**Unit selection:** -
Not for motor type: -	**Scaling:** -	**Expert list:** 1
Min	**Max**	**Factory setting**
-	-	-

Description: Displays the Safety Integrated status on the drive (processor 1 + processor 2).

Bit field:

Bit	Signal name	1 signal	0 signal	FP
00	STO selected in drive	Yes	No	2804
01	STO active in drive	Yes	No	2804
02	SS1 delay time active in the drive	Yes	No	2804
04	SBC requested	Yes	No	2804
05	SS1 selected in the drive (Basic Functions)	Yes	No	-
06	SS1 active in the drive (Basic Functions)	Yes	No	-
31	Shutdown paths must be tested	Yes	No	2810

Note: This status is formed from the AND operation of the relevant status of the two monitoring channels.

r9776 SI diagnostics / SI diagnostics

SERVO_S110-DP, SERVO_S110-CAN, SERVO_S110-PN

Can be changed: -	**Calculated:** -	**Access level:** 4
Data type: Unsigned32	**Dyn. index:** -	**Func. diagram:** -
P-Group: Safety Integrated	**Unit group:** -	**Unit selection:** -
Not for motor type: -	**Scaling:** -	**Expert list:** 1
Min	**Max**	**Factory setting**
-	-	-

Description: The parameter is used for diagnostics.

Bit field:

Bit	Signal name	1 signal	0 signal	FP
00	Safety parameter changed POWER ON required	Yes	No	-

Note: Re bit 00 = 1:
At least one Safety parameter has been changed that will only take effect after a POWER ON.

r9780 SI monitoring clock cycle (Control Unit) / SI monitor_clck CU

SERVO_S110-DP, SERVO_S110-CAN, SERVO_S110-PN

Can be changed: -	**Calculated:** -	**Access level:** 3
Data type: FloatingPoint32	**Dyn. index:** -	**Func. diagram:** 2802
P-Group: Safety Integrated	**Unit group:** -	**Unit selection:** -
Not for motor type: -	**Scaling:** -	**Expert list:** 1
Min	**Max**	**Factory setting**
- [ms]	- [ms]	- [ms]

Description: Displays the clock cycle time for the Safety Integrated Basic Functions on the Control Unit.

Dependency: Refer to: r9880

r9781[0...1] SI checksum to check changes (Control Unit) / SI chg chksm CU

CU_S110-DP, CU_S110-CAN, CU_S110-PN

Can be changed: -	**Calculated:** -	**Access level:** 3
Data type: Unsigned32	**Dyn. index:** -	**Func. diagram:** -
P-Group: Safety Integrated	**Unit group:** -	**Unit selection:** -
Not for motor type: -	**Scaling:** -	**Expert list:** 1
Min	**Max**	**Factory setting**
-	-	-

Description: Displays the checksum for tracking changes for Safety Integrated.
These are additional checksums that are created to track changes (fingerprint for the "safety logbook" functionality) to safety parameters (that are relevant for checksums).

Index: [0] = SI checksum to track functional changes
[1] = SI checksum to track hardware-specific changes

Dependency: Refer to: p9601, p9729, p9799
Refer to: F01690

r9782[0...1] SI time stamps to check changes (Control Unit) / SI chg t CU

CU_S110-DP, CU_S110-CAN, CU_S110-PN

Can be changed: -	**Calculated:** -	**Access level:** 3
Data type: FloatingPoint32	**Dyn. index:** -	**Func. diagram:** -
P-Group: Safety Integrated	**Unit group:** -	**Unit selection:** -
Not for motor type: -	**Scaling:** -	**Expert list:** 1
Min	**Max**	**Factory setting**
- [h]	- [h]	- [h]

Description: Displays the time stamps for the checksums for tracking changes for Safety Integrated.
The time stamps for the checksums for tracking changes (fingerprint for the "safety logbook" functionality) made to safety parameters are saved in parameters p9781[0] and p9781[1].

Index: [0] = SI time stamp for checksum to track functional changes
[1] = SI time stamp for checksum to track hardware-specific changes

Dependency: Refer to: p9601, p9729, p9799
Refer to: F01690

p9783 SI motion synchr. motor current injection sensorless / SI Mtn SM Id SL

SERVO_S110-DP, SERVO_S110-CAN, SERVO_S110-PN

Can be changed: U, T	**Calculated:** -	**Access level:** 3
Data type: FloatingPoint32	**Dyn. index:** -	**Func. diagram:** -
P-Group: Safety Integrated	**Unit group:** -	**Unit selection:** -
Not for motor type: -	**Scaling:** -	**Expert list:** 1
Min	**Max**	**Factory setting**
-50.00 [%]	0.00 [%]	-20.00 [%]

Description: Sets the field-generating current for sensorless actual value sensing of synchronous motors.
For synchronous motors, this current is fed in using sensorless safety functions.
The value must fulfill the following condition: |p0305 x p9783| >= p9588 x 1.2

Dependency: Refer to: p9588
Refer to: C01711

Notice: Reducing this percentage value can adversely affect actual value sensing with synchronous motors.
If the value is increased, this results in an increased motor power loss.

Note: This parameter is only effective for encoderless actual value sensing (p9306/p9506 = 1).

r9794[0...19] SI crosswise comparison list (processor 1) / SI CDC_list P1

SERVO_S110-DP, SERVO_S110-CAN, SERVO_S110-PN

Can be changed: -	**Calculated:** -	**Access level:** 3
Data type: Unsigned16	**Dyn. index:** -	**Func. diagram:** 2802
P-Group: Safety Integrated	**Unit group:** -	**Unit selection:** -
Not for motor type: -	**Scaling:** -	**Expert list:** 1
Min	**Max**	**Factory setting**
-	-	-

Description: Displays the numbers of the data items that are currently being compared crosswise on processor 1.
The content of the list of crosswise-compared data is dependent upon the particular application.

Dependency: Refer to: r9894

Note: Example:
r9794[0] = 1 (monitoring clock cycle)
r9794[1] = 2 (enable safety functions)
r9794[2] = 3 (F-DI changeover, tolerance time)
...
A complete list of numbers for crosswise-compared data items appears in fault F01611.

r9795 SI diagnostics STOP F (Control Unit) / SI diag STOP F CU

SERVO_S110-DP, SERVO_S110-CAN, SERVO_S110-PN

Can be changed: -	**Calculated:** -	**Access level:** 2
Data type: Unsigned32	**Dyn. index:** -	**Func. diagram:** 2802
P-Group: Safety Integrated	**Unit group:** -	**Unit selection:** -
Not for motor type: -	**Scaling:** -	**Expert list:** 1
Min	**Max**	**Factory setting**
-	-	-

Description: Displays the number of the cross-compared data which has caused STOP F on the Control Unit.

Dependency: Refer to: r9895
Refer to: F01611

Note: A complete list of numbers for crosswise-compared data items appears in fault F01611.

r9798 SI actual checksum SI parameters (Control Unit) / SI act_checksum CU

SERVO_S110-DP, SERVO_S110-CAN, SERVO_S110-PN

Can be changed: -	**Calculated:** -	**Access level:** 3
Data type: Unsigned32	**Dyn. index:** -	**Func. diagram:** 2800
P-Group: Safety Integrated	**Unit group:** -	**Unit selection:** -
Not for motor type: -	**Scaling:** -	**Expert list:** 1
Min	**Max**	**Factory setting**
-	-	-

Description: Displays the checksum over the checked Safety Integrated parameters on the Control Unit (actual checksum).

Dependency: Refer to: p9799, r9898

p9799 SI reference checksum SI parameters (Control Unit) / SI set_checksum CU

SERVO_S110-DP, SERVO_S110-CAN, SERVO_S110-PN

Can be changed: C2(95)	**Calculated:** -	**Access level:** 3
Data type: Unsigned32	**Dyn. index:** -	**Func. diagram:** 2800
P-Group: Safety Integrated	**Unit group:** -	**Unit selection:** -
Not for motor type: -	**Scaling:** -	**Expert list:** 1
Min	**Max**	**Factory setting**
0000 hex	FFFF FFFF hex	0000 hex

Description: Sets the checksum for the checked Safety Integrated parameters on the Control Unit (reference checksum).

Dependency: Refer to: r9798, p9899

p9801 SI enable functions integrated in the drive (processor 2) / SI enable fct P2

SERVO_S110-CAN

Can be changed: C2(95)	**Calculated:** -	**Access level:** 3
Data type: Unsigned16	**Dyn. index:** -	**Func. diagram:** -
P-Group: Safety Integrated	**Unit group:** -	**Unit selection:** -
Not for motor type: -	**Scaling:** -	**Expert list:** 1
Min	**Max**	**Factory setting**
-	-	0000 bin

Description: Sets the enable signals for safety functions on processor 2 that are integrated in the drive.
Not all possible settings may be permissible, depending on the Control Unit and Motor Module or Power Module being used.

Bit field:

Bit	Signal name	1 signal	0 signal	FP
00	STO (SH) via terminals (Motor Module) enable	Enable	Inhibit	2810
02	Motion monitoring functions integr. in the drive (Motor Module)	Enable	Inhibit	-

Dependency: Refer to: p9601, r9871

Notice: This parameter is overwritten by the copy function of the safety functions integrated in the drive.

Note: STO: Safe Torque Off
SMM: Safe Motion Monitoring
A change only becomes effective after a POWER ON.

p9801 SI enable functions integrated in the drive (processor 2) / SI enable fct P2

SERVO_S110-DP, SERVO_S110-PN

Can be changed: C2(95)	**Calculated:** -	**Access level:** 3
Data type: Unsigned16	**Dyn. index:** -	**Func. diagram:** -
P-Group: Safety Integrated	**Unit group:** -	**Unit selection:** -
Not for motor type: -	**Scaling:** -	**Expert list:** 1
Min	**Max**	**Factory setting**
-	-	0000 bin

Description: Sets the enable signals for safety functions on processor 2 that are integrated in the drive.

Not all possible settings may be permissible, depending on the Control Unit and Motor Module or Power Module being used.

Bit field:

Bit	Signal name	1 signal	0 signal	FP
00	STO (SH) via terminals (Motor Module) enable	Enable	Inhibit	2810
02	Motion monitoring functions integr. in the drive (Motor Module)	Enable	Inhibit	-
03	PROFIsafe (Motor Module) enable	Enable	Inhibit	-

Dependency: Refer to: p9601, r9871

Notice: This parameter is overwritten by the copy function of the safety functions integrated in the drive.

Note: STO: Safe Torque Off

SMM: Safe Motion Monitoring

A change only becomes effective after a POWER ON.

p9802 SI enable Safe Brake Control (processor 2) / SI enable SBC P2

SERVO_S110-DP, SERVO_S110-CAN, SERVO_S110-PN

Can be changed: C2(95)	**Calculated:** -	**Access level:** 3
Data type: Integer32	**Dyn. index:** -	**Func. diagram:** 2814
P-Group: Safety Integrated	**Unit group:** -	**Unit selection:** -
Not for motor type: -	**Scaling:** -	**Expert list:** 1
Min	**Max**	**Factory setting**
0	1	0

Description: Sets the enable signal for the "Safe Brake Control" (SBC) function on processor 2.

0: Inhibit SBC

1: Enable SBC

Dependency: Refer to: p9602

Notice: This parameter is overwritten by the copy function of the safety functions integrated in the drive.

Note: The "Safe Brake Control" function is not activated until at least one safety monitoring function has been enabled (i.e. p9501 not equal to 0 and/or p9801 not equal to 0).

It does not make sense to parameterize "no motor holding brake available" and enable "Safe Brake Control" (p1215 = 0, p9602 = p9802 = 1) if there is no motor holding brake.

It does not make sense to parameterize "motor holding brake the same as sequence control, connection via BICO" and enable "Safe Brake Control" (p1215 = 3, p9602 = p9802 = 1).

It is not permissible to parameterize "motor holding brake without feedback signals" and enable "Safe Brake Control" (p1278 = 1, p9602 = p9802 = 1).

SBC: Safe Brake Control

p9810 SI PROFIsafe address (processor 2) / SI PROFIsafe P2

SERVO_S110-DP, SERVO_S110-PN

Can be changed: C2(95)	**Calculated:** -	**Access level:** 3
Data type: Unsigned16	**Dyn. index:** -	**Func. diagram:** -
P-Group: Safety Integrated	**Unit group:** -	**Unit selection:** -
Not for motor type: -	**Scaling:** -	**Expert list:** 1
Min	**Max**	**Factory setting**
0000 hex	FFFE hex	0000 hex

Description: Sets the PROFIsafe address on processor 2.

Notice: This parameter is overwritten by the copy function of the safety functions integrated in the drive.

p9850 SI F-DI changeover tolerance time (processor 2) / SI F-DI_chg tol P2

SERVO_S110-DP, SERVO_S110-CAN, SERVO_S110-PN

Can be changed: C2(95)	**Calculated:** -	**Access level:** 3
Data type: FloatingPoint32	**Dyn. index:** -	**Func. diagram:** 2810
P-Group: Safety Integrated	**Unit group:** -	**Unit selection:** -
Not for motor type: -	**Scaling:** -	**Expert list:** 1
Min	**Max**	**Factory setting**
0.00 [µs]	2000000.00 [µs]	500000.00 [µs]

Description: Sets the tolerance time for the changeover of the safety-related inputs on processor 2.

An F-DI changeover is not effective simultaneously due to the different runtimes in the two monitoring channels. After an F-DI changeover, dynamic data is not subject to a crosswise data comparison during this tolerance time.

Dependency: Refer to: p9650

Notice: This parameter is overwritten by the copy function of the safety functions integrated in the drive.

Note: For a crosswise data comparison between p9650 and p9850, a difference of one Safety monitoring clock cycle is tolerated.

The parameterized time is internally rounded-off to an integer multiple of the monitoring clock cycle.

F-DI: Failsafe Digital Input

p9851 SI STO/SBC/SS1 debounce time (processor 2) / SI STO t_debou P2

SERVO_S110-DP, SERVO_S110-CAN, SERVO_S110-PN

Can be changed: C2(95)	**Calculated:** -	**Access level:** 3
Data type: FloatingPoint32	**Dyn. index:** -	**Func. diagram:** -
P-Group: Safety Integrated	**Unit group:** -	**Unit selection:** -
Not for motor type: -	**Scaling:** -	**Expert list:** 1
Min	**Max**	**Factory setting**
0.00 [µs]	100000.00 [µs]	0.00 [µs]

Description: Sets the debounce time for the digital input used to control STO/SBC/SS1.

Notice: This parameter is overwritten by the copy function of the safety functions integrated in the drive.

Note: The debounce time is rounded to whole milliseconds. It specifies the maximum duration of a fault pulse at the fail-safe digital inputs with no reaction/influence on the selection or deselection of the Safety Basic Functions.

Example:

Debounce time = 1 ms: Fault pulses of 1 ms are filtered; only pulses longer than 2 ms are processed.

Debounce time = 3 ms: Fault pulses of 3 ms are filtered; only pulses longer than 4 ms are processed.

p9852 SI Safe Stop 1 delay time (processor 2) / SI Stop 1 t_del P2

SERVO_S110-DP, SERVO_S110-CAN, SERVO_S110-PN

Can be changed: C2(95)	**Calculated:** -	**Access level:** 3
Data type: FloatingPoint32	**Dyn. index:** -	**Func. diagram:** -
P-Group: Safety Integrated	**Unit group:** -	**Unit selection:** -
Not for motor type: -	**Scaling:** -	**Expert list:** 1
Min	**Max**	**Factory setting**
0.00 [ms]	300000.00 [ms]	0.00 [ms]

Description: Sets the delay time of the pulse suppression for the "Safe Stop 1" (SS1) function on processor 2 to brake along the OFF3 down ramp (p1135).

Recommendation: In order that the drive can completely ramp-down along the OFF3 ramp and a motor holding brake that is possibly available can close, then the delay time should be set as follows:

Motor holding brake parameterized: delay time >= p1135 + p1228 + p1217

Motor holding brake not parameterized: delay time >= p1135 + p1228

Dependency: Refer to: p1135, p9652

Notice: This parameter is overwritten by the copy function of the safety functions integrated in the drive.

Note: For a crosswise data comparison between p9652 and p9852, a difference of one Safety monitoring clock cycle is tolerated.

The parameterized time is rounded internally to an integer multiple of the monitoring clock cycle.

SS1: Safe Stop 1 (corresponds to Stop Category 1 acc. to EN60204)

p9858 SI transition time STOP F to STOP A (processor 2) / SI STOP F->A P2

SERVO_S110-DP, SERVO_S110-CAN, SERVO_S110-PN

Can be changed: C2(95)	**Calculated:** -	**Access level:** 3
Data type: FloatingPoint32	**Dyn. index:** -	**Func. diagram:** 2802
P-Group: Safety Integrated	**Unit group:** -	**Unit selection:** -
Not for motor type: -	**Scaling:** -	**Expert list:** 1
Min	**Max**	**Factory setting**
0.00 [µs]	30000000.00 [µs]	0.00 [µs]

Description: Sets the transition period from STOP F to STOP A on processor 2.

Dependency: Refer to: p9658, r9895

Refer to: F30611

Notice: This parameter is overwritten by the copy function of the safety functions integrated in the drive.

Note: For a crosswise data comparison between p9658 and p9858, a difference of one Safety monitoring clock cycle is tolerated.

The parameterized time is rounded internally to an integer multiple of the monitoring clock cycle.

STOP F: Defect in a monitoring channel (error in the crosswise data comparison)

STOP A: Pulse suppression via the safety shutdown path

r9871 SI common functions (processor 2) / SI common fct P2

SERVO_S110-DP, SERVO_S110-CAN, SERVO_S110-PN

Can be changed: -	**Calculated:** -	**Access level:** 3
Data type: Unsigned32	**Dyn. index:** -	**Func. diagram:** 2804
P-Group: Safety Integrated	**Unit group:** -	**Unit selection:** -
Not for motor type: -	**Scaling:** -	**Expert list:** 1
Min	**Max**	**Factory setting**
-	-	-

Description: Displays the Safety Integrated monitoring functions supported on processor 1 and processor 2.

Processor 2 determines this display.

Bit field:

Bit	Signal name	1 signal	0 signal	FP
00	STO supported via terminals	Yes	No	2804
01	SBC supported	Yes	No	2804
02	Extended Functions supported (p9501 > 0)	Yes	No	2804
03	SS1 supported	Yes	No	2804
04	Extended Functions PROFIsafe supported	Yes	No	-
05	Extended Functions integrated in drive supported (p9601.2 = 1)	Yes	No	-
06	Basic Functions PROFIsafe supported	Yes	No	-
07	Extended Functions encoderless supported	Yes	No	-
08	Safe Brake Adapter supported	Yes	No	-
09	Basic Functions PROFIsafe for parallel connection supported	Yes	No	-
10	Extended Functions integrated in drive for parallel connection	Yes	No	-
11	Extended Functions SDI supported	Yes	No	-
12	Extended Functions SSM encoderless supported	Yes	No	-

Dependency: Refer to: r9771

Note: MM: Motor Module

SBC: Safe Brake Control

SDI: Safe Direction (safe motion direction)

SI: Safety Integrated

SS1: Safe Stop 1

STO: Safe Torque Off / SH: Safe standstill

SSM: Safe Speed Monitor (safety-relevant feedback signal from the velocity monitoring) / SGA n < nx: Safety-related output n < nx

ESR: Extended Stop and Retract

r9872.0...24 CO/BO: SI status (processor 2) / SI Status P2

SERVO_S110-DP, SERVO_S110-CAN, SERVO_S110-PN

Can be changed: -	**Calculated:** -	**Access level:** 2
Data type: Unsigned32	**Dyn. index:** -	**Func. diagram:** 2804
P-Group: Safety Integrated	**Unit group:** -	**Unit selection:** -
Not for motor type: -	**Scaling:** -	**Expert list:** 1
Min	**Max**	**Factory setting**
-	-	-

Description: Displays the Safety Integrated status on processor 2.

Bit field:

Bit	Signal name	1 signal	0 signal	FP
00	STO on Motor Module selected	Yes	No	2810
01	STO on Motor Module active	Yes	No	2810
02	SS1 delay time on Motor Module active	Yes	No	2810
03	Safe Brake Adapter feedback signal	Yes	No	2814
04	SBC requested	Yes	No	2814
05	SS1 selected on the Motor Module (Basic Functions)	Yes	No	-
06	SS1 active on the Motor Module (Basic Functions)	Yes	No	-
09	STOP A cannot be acknowledged active	Yes	No	2802
10	STOP A active	Yes	No	2802
15	STOP F active	Yes	No	2802
16	STO cause: Safety comm. mode	Yes	No	-
17	STO cause selection via terminal (Basic Functions)	Yes	No	-
18	STO cause: selection via SMM	Yes	No	-
20	STO cause selection PROFIsafe (Basic Functions)	Yes	No	-
22	SS1 cause selection terminal (Basic Functions)	Yes	No	-
23	SS1 cause selection PROFIsafe (Basic Functions)	Yes	No	-
24	Slave Motor Module ready for communication	Yes	No	-

Dependency: Refer to: r9772

Notice: If communication between processor 1 and processor 2 is interrupted, then this display parameter is no longer updated. The last transferred status of processor 2 is displayed.

Note: Re bit 00:

When STO is selected, the cause is displayed in bits 16 ... 18 and in bit 20.

Re bit 05:

When SS1 is selected, the cause is displayed in bits 22 and 23.

Re bit 18:

When the bit is set, STO is selected via PROFIsafe.

SMM: Safe Motion Monitoring

r9880 SI monitoring clock cycle (processor 2) / SI mon_clk cyc P2

SERVO_S110-DP, SERVO_S110-CAN, SERVO_S110-PN

Can be changed: -	**Calculated:** -	**Access level:** 3
Data type: FloatingPoint32	**Dyn. index:** -	**Func. diagram:** 2802
P-Group: Safety Integrated	**Unit group:** -	**Unit selection:** -
Not for motor type: -	**Scaling:** -	**Expert list:** 1
Min	**Max**	**Factory setting**
- [ms]	- [ms]	- [ms]

Description: Displays the clock cycle time for the Safety Integrated Basic Functions on processor 2.

Dependency: Refer to: r9780

r9881[0...11] SI Motion Sensor Module Node Identifier second channel / SI Mtn SM Ident

SERVO_S110-DP, SERVO_S110-CAN, SERVO_S110-PN

Can be changed: -	**Calculated:** -	**Access level:** 3
Data type: Unsigned8	**Dyn. index:** -	**Func. diagram:** -
P-Group: Safety Integrated	**Unit group:** -	**Unit selection:** -
Not for motor type: -	**Scaling:** -	**Expert list:** 1
Min	**Max**	**Factory setting**
-	-	-

Description: Displays the Node Identifier of the Sensor Module that the second channel uses for the motion monitoring functions.

r9890[0...2] SI version (Sensor Module) / SI version SM

SERVO_S110-DP, SERVO_S110-CAN, SERVO_S110-PN

Can be changed: -	**Calculated:** -	**Access level:** 3
Data type: Unsigned16	**Dyn. index:** -	**Func. diagram:** -
P-Group: Safety Integrated	**Unit group:** -	**Unit selection:** -
Not for motor type: -	**Scaling:** -	**Expert list:** 1
Min	**Max**	**Factory setting**
-	-	-

Description: Displays the Safety Integrated version on the Sensor Module.

Index: [0] = Safety Version (major release)
[1] = Safety Version (minor release)
[2] = Safety Version (baselevel or patch)

Dependency: Refer to: r9770

Note: Example:
r9890[0] = 2, r9890[1] = 3, r9890[2] = 1 --> Safety-Version V02.03.01

r9894[0...19] SI crosswise comparison list (processor 2) / SI CDC_list P2

SERVO_S110-DP, SERVO_S110-CAN, SERVO_S110-PN

Can be changed: -	**Calculated:** -	**Access level:** 3
Data type: Unsigned16	**Dyn. index:** -	**Func. diagram:** 2802
P-Group: Safety Integrated	**Unit group:** -	**Unit selection:** -
Not for motor type: -	**Scaling:** -	**Expert list:** 1
Min	**Max**	**Factory setting**
-	-	-

Description: Displays the numbers of the data items that are currently being compared crosswise on processor 2.
The content of the list of crosswise-compared data is dependent upon the particular application.

Dependency: Refer to: r9794

Note: Example:
r9894[0] = 1 (monitoring clock cycle)
r9894[1] = 2 (enable safety functions)
r9894[2] = 3 (F-DI changeover, tolerance time)
...
The complete list of numbers for crosswise data comparison is listed in Fault F30611.

r9895 SI diagnostics STOP F (processor 2) / SI diag STOP F P2

SERVO_S110-DP, SERVO_S110-CAN, SERVO_S110-PN

Can be changed: -	**Calculated:** -	**Access level:** 2
Data type: Unsigned32	**Dyn. index:** -	**Func. diagram:** 2802
P-Group: Safety Integrated	**Unit group:** -	**Unit selection:** -
Not for motor type: -	**Scaling:** -	**Expert list:** 1
Min	**Max**	**Factory setting**
-	-	-

Description: Displays the number of the cross-compared data item which caused STOP F on processor 2.

Dependency: Refer to: r9795
Refer to: F30611

Note: The complete list of numbers for crosswise data comparison is listed in Fault F30611.

r9898 SI actual checksum SI parameters (processor 2) / SI act_chksm P2

SERVO_S110-DP, SERVO_S110-CAN, SERVO_S110-PN

Can be changed: -	**Calculated:** -	**Access level:** 3
Data type: Unsigned32	**Dyn. index:** -	**Func. diagram:** 2800
P-Group: Safety Integrated	**Unit group:** -	**Unit selection:** -
Not for motor type: -	**Scaling:** -	**Expert list:** 1
Min	**Max**	**Factory setting**
-	-	-

Description: Displays the checksum for the Safety Integrated parameters checked using checksums on processor 2 (actual checksum).

Dependency: Refer to: r9798, p9899

p9899 SI setpoint checksum SI parameters (processor 2) / SI setp_chksm P2

SERVO_S110-DP, SERVO_S110-CAN, SERVO_S110-PN

Can be changed: C2(95)	**Calculated:** -	**Access level:** 3
Data type: Unsigned32	**Dyn. index:** -	**Func. diagram:** 2800
P-Group: Safety Integrated	**Unit group:** -	**Unit selection:** -
Not for motor type: -	**Scaling:** -	**Expert list:** 1
Min	**Max**	**Factory setting**
0000 hex	FFFF FFFF hex	0000 hex

Description: Sets the checksum for the Safety Integrated parameters checked using checksums on processor 2 (setpoint checksum).

Dependency: Refer to: p9799, r9898

r9900 Actual topology number of indices / Act topo indices

CU_S110-DP, CU_S110-CAN, CU_S110-PN

Can be changed: -	**Calculated:** -	**Access level:** 3
Data type: Unsigned16	**Dyn. index:** -	**Func. diagram:** -
P-Group: Topology	**Unit group:** -	**Unit selection:** -
Not for motor type: -	**Scaling:** -	**Expert list:** 0
Min	**Max**	**Factory setting**
-	-	-

Description: Displays the number of indices of the actual topology.

Dependency: Refer to: r9901

Note: Only for internal Siemens use.
The parameter is not displayed for the STARTER commissioning software.

r9901[0...n] Actual topology / Act topo

CU_S110-DP, CU_S110-CAN, CU_S110-PN

Can be changed: -	**Calculated:** -	**Access level:** 3
Data type: Unsigned16	**Dyn. index:** r9900	**Func. diagram:** -
P-Group: Topology	**Unit group:** -	**Unit selection:** -
Not for motor type: -	**Scaling:** -	**Expert list:** 0
Min	**Max**	**Factory setting**
-	-	-

Description: Displays the actual topology of the drive unit.
The actual topology is sub-divided into several sections. Each of the following data is saved under an index.
General data on the topology:
- version
- attribute to compare the actual topology and target topology
- number of components

Data on a component:
- type component of the node ID of the component
- number of DRIVE-CLiQ sockets in the Node Identifier
- manufacturer and version of the Node Identifier
- serial number of the Node Identifier (4 indices)

- index of the component
- order number (8 indices)
- attribute to compare the actual topology and target topology of the component
- communications address
- number of port types
- port type
- number of ports of the port type
- communications address of the associated/linked component
- number of the associated/linked port
- communications address of the associated/linked component
- number of the associated port, etc.

Data on the next component:
- etc.

Dependency: Refer to: r9900

Note: Only for internal Siemens use.
The parameter is not displayed for the STARTER commissioning software.

p9902 Target topology number of indices / TargetTopo indices

CU_S110-DP, CU_S110-CAN, CU_S110-PN

Can be changed: -	**Calculated:** -	**Access level:** 3
Data type: Unsigned16	**Dyn. index:** -	**Func. diagram:** -
P-Group: Topology	**Unit group:** -	**Unit selection:** -
Not for motor type: -	**Scaling:** -	**Expert list:** 0
Min	**Max**	**Factory setting**
1	65535	1

Description: Sets the number of target topology indices.

Dependency: Refer to: p9903

Note: Only for internal Siemens use.
The parameter is not displayed for the STARTER commissioning software.

p9903[0...n] Target topology / Target topo

CU_S110-DP, CU_S110-CAN, CU_S110-PN

Can be changed: -	**Calculated:** -	**Access level:** 3
Data type: Unsigned16	**Dyn. index:** p9902	**Func. diagram:** -
P-Group: Topology	**Unit group:** -	**Unit selection:** -
Not for motor type: -	**Scaling:** -	**Expert list:** 0
Min	**Max**	**Factory setting**
0000 hex	FFFF hex	0000 hex

Description: Sets the target topology of the drive unit.
The target topology is sub-divided into several sections. Each of the following data is saved under an index.
General data on the topology:
- version
- attribute to compare the actual topology and target topology
- number of components

Data on a component:
- type component of the Node Identifier of the component
- number of DRIVE-CLiQ sockets in the Node Identifier
- manufacturer and version of the Node Identifier
- serial number of the Node Identifier (4 indices)
- index of the component
- order number (8 indices)
- attribute to compare the actual topology and target topology of the component
- component number
- number of port types
- port type
- number of ports of the port type

- component number of the associated/linked component
- number of the associated/linked port
- component number of the associated/linked component
- number of the associated port, etc.

Data on the next component:

- etc.

Dependency: Refer to: p9902

Note: The target topology can only be modified using the commissioning software.

Only for internal Siemens use.

The parameter is not displayed for the STARTER commissioning software.

Changes do not become effective until they have been accepted with p9428 = 1, or on change of status from p0009 = 101 to 0 or 111.

p9904 Topology comparison acknowledge differences / Topo_compare ackn

CU_S110-DP, CU_S110-CAN, CU_S110-PN

Can be changed: C1(1)	**Calculated:** -	**Access level:** 3
Data type: Unsigned32	**Dyn. index:** -	**Func. diagram:** -
P-Group: Topology	**Unit group:** -	**Unit selection:** -
Not for motor type: -	**Scaling:** -	**Expert list:** 1
Min	**Max**	**Factory setting**
0000 hex	FFFF FFFF hex	0000 hex

Description: If, when comparing the actual topology and target topology, only error has occurred, that can be acknowledged, then using this parameter, a new comparison can be started - acknowledging the error in the target topology.

Differences that can be acknowledged:

- topology comparison, component shifted
- topology comparison, serial number of a component has been detected to be different (byte 3 = 1)
- topology comparison shows one component that is connected differently

The following parameter values are available:

p9904 = 1 --> the procedure is started.

p9904 = 0 after starting --> the procedure has been successfully completed.

p9904 = 1 after starting --> the procedure has not been successfully completed.

The possible causes for an unsuccessful procedure are located in bytes 4, 3, 2.

Byte 2:

Number of structural differences.

Byte 3:

Number of differences that can be acknowledged (p9904).

Byte 4:

Number of differences. These differences can be resolved as follows:

- sets the topology comparison (p9906 or p9907/p9908).
- change over the actual topology.

The appropriate action should be selected corresponding to the message that is displayed/output.

Note: In order to permanently accept the acknowledgement of the fault that can be resolved, then it must be saved in a non-volatile fashion (p0977).

p9905 Device specialization / Specialization

CU_S110-DP, CU_S110-CAN, CU_S110-PN

Can be changed: C1(1)	**Calculated:** -	**Access level:** 3
Data type: Unsigned16	**Dyn. index:** -	**Func. diagram:** -
P-Group: Topology	**Unit group:** -	**Unit selection:** -
Not for motor type: -	**Scaling:** -	**Expert list:** 1
Min	**Max**	**Factory setting**
0	2	0

Description: With p9905 = 1, the serial numbers and the hardware versions of all of the components are transferred from the actual topology into the target topology and a new comparison is started.

For this device specialization, the components of the target topology may only differ from those of the actual topology by the serial numbers.

With p9905 = 2, the serial numbers, the hardware versions and the order numbers of all of the components are transferred from the actual topology into the target topology and a new comparison is started.

For this device specialization, the components of the target topology may only differ from those of the actual topology by the serial numbers and order numbers.

Note: p9905 is automatically set to 0 at the end of the operation.

In order to permanently accept the data, it is necessary to save in a non-volatile fashion (p0977).

p9910 Transfer additional components into the target topology / Transfer comp

CU_S110-DP, CU_S110-CAN, CU_S110-PN

Can be changed: C1(1)	**Calculated:** -	**Access level:** 1
Data type: Integer16	**Dyn. index:** -	**Func. diagram:** -
P-Group: Topology	**Unit group:** -	**Unit selection:** -
Not for motor type: -	**Scaling:** -	**Expert list:** 1
Min	**Max**	**Factory setting**
0	6	0

Description: Transfer additional inserted DRIVE-CLiQ components into the target topology and add the appropriate drive objects to the project.

Value:
0: No selection
1: Drive object type SERVO
2: Drive object type VECTOR
3: SINAMICS GM (DFEMV & VECTORMV)
4: SINAMICS SM (AFEMV & VECTORMV)
5: SINAMICS GL (VECTORGL)
6: SINAMICS SL (VECTORSL)

p9915 DRIVE-CLiQ data transfer error shutdown threshold master / DLQ fault master

CU_S110-DP, CU_S110-CAN, CU_S110-PN

Can be changed: C1(1)	**Calculated:** -	**Access level:** 4
Data type: Unsigned32	**Dyn. index:** -	**Func. diagram:** -
P-Group: Topology	**Unit group:** -	**Unit selection:** -
Not for motor type: -	**Scaling:** -	**Expert list:** 1
Min	**Max**	**Factory setting**
0000 hex	0007 07FF hex	0007 02FF hex

Description: Only for internal Siemens service purposes.

p9916 DRIVE-CLiQ data transfer error shutdown threshold slave / DLQ fault slave

CU_S110-DP, CU_S110-CAN, CU_S110-PN

Can be changed: C1(1)	**Calculated:** -	**Access level:** 4
Data type: Unsigned32	**Dyn. index:** -	**Func. diagram:** -
P-Group: Topology	**Unit group:** -	**Unit selection:** -
Not for motor type: -	**Scaling:** -	**Expert list:** 1
Min	**Max**	**Factory setting**
0000 hex	0007 07FF hex	0007 02FF hex

Description: Only for internal Siemens service purposes.

p9920[0...99] Licensing enter license key / Enter license key

CU_S110-DP, CU_S110-CAN, CU_S110-PN

Can be changed: U, T	**Calculated:** -	**Access level:** 2
Data type: Unsigned8	**Dyn. index:** -	**Func. diagram:** -
P-Group: -	**Unit group:** -	**Unit selection:** -
Not for motor type: -	**Scaling:** -	**Expert list:** 1
Min	**Max**	**Factory setting**
-	-	-

Description: Enters the license key for this drive unit.

Example of the license key:

EACZ-QBCA = 69 65 67 90 45 81 66 67 65 dec (ASCII characters)

Index 0 = license key character 1 (e.g. 69 dec)

Index 1 = license key character 2 (e.g. 65 dec)

...

Index 8 = license key character 9 (e.g. 65 dec)
Index 9 = license key character 20 (e.g. 0 dec)
...
With the STARTER commissioning software, ASCII characters are not entered coded, i.e. the characters of the license key can be entered as printed in the Certificate of License. In this case, STARTER codes the characters.

Dependency: Refer to: r7843, p9921
Refer to: A13000, A13001, F13010

Notice: An ASCII table (excerpt) can be found, for example, in the appendix to the List Manual.

Note: If there is not a valid license key present, all the indices have the value 0 dec.
Only the ASCII characters, contained in a license key can be entered.
When changing p9920[x] to the value 0 dec, all the values of all the following indices are also set to 0 dec.
After entering the license key, the license key must be activated (p9921).
If the licensing is not adequate, then the following alarm is displayed together with LED:
- A13000 --> licensing not sufficient
- LED READY --> flashes green/red with 0.5 Hz

p9921 Licensing activate license key / Act license key

CU_S110-DP, CU_S110-CAN, CU_S110-PN

Can be changed: U, T	**Calculated:** -	**Access level:** 2
Data type: Integer16	**Dyn. index:** -	**Func. diagram:** -
P-Group: -	**Unit group:** -	**Unit selection:** -
Not for motor type: -	**Scaling:** -	**Expert list:** 1
Min	**Max**	**Factory setting**
0	1	0

Description: Activates the entered license key.
The following is executed when activating the license key.
- the checksum of the entered license key is checked.
- the entered license key is saved in a non-volatile fashion on the memory card.
- re-enter the license key.

Value: 0: Inactive
1: Activate start license key

Dependency: Refer to: p9920
Refer to: A13000, A13001, F13010

Note: Before activation, the license key entered using parameter p9920 is checked. If this check identifies an error, activation is rejected. In this case, writing a 1 to p9921 is rejected.
When the license key has been activated, p9921 is automatically set to 0.

r9925[0...99] Firmware file incorrect / FW file incorr

CU_S110-DP, CU_S110-CAN, CU_S110-PN

Can be changed: -	**Calculated:** -	**Access level:** 2
Data type: Unsigned8	**Dyn. index:** -	**Func. diagram:** -
P-Group: -	**Unit group:** -	**Unit selection:** -
Not for motor type: -	**Scaling:** -	**Expert list:** 1
Min	**Max**	**Factory setting**
-	-	-

Description: Displays the directory and name of the file whose status as shipped from the factory was identified as impermissible.

Dependency: Refer to: r9926
Refer to: A01016

Note: The directory and name of the file is displayed in the ASCII code.

r9926 Firmware check status / FW check status

CU_S110-DP, CU_S110-CAN, CU_S110-PN

Can be changed: -	**Calculated:** -	**Access level:** 2
Data type: Unsigned8	**Dyn. index:** -	**Func. diagram:** -
P-Group: -	**Unit group:** -	**Unit selection:** -
Not for motor type: -	**Scaling:** -	**Expert list:** 1
Min	**Max**	**Factory setting**
-	-	-

Description: Displays the status when the firmware is checked when the system is booted.
0: Firmware not yet checked.
1: Check running.
2: Check successfully completed.
3: Check indicates an error.

Dependency: Refer to: r9925
Refer to: A01016

p9930[0...8] System logbook activation / SYSLOG activation

CU_S110-DP, CU_S110-CAN, CU_S110-PN

Can be changed: U, T	**Calculated:** -	**Access level:** 4
Data type: Unsigned8	**Dyn. index:** -	**Func. diagram:** -
P-Group: -	**Unit group:** -	**Unit selection:** -
Not for motor type: -	**Scaling:** -	**Expert list:** 1
Min	**Max**	**Factory setting**
0	255	0

Description: Only for service purposes.

Index: [0] = System logbook stage (0: Not active)
[1] = COM2/COM1 (0: COM2, 1: COM1)
[2] = Activate file write (0: Not active)
[3] = Display time stamp (0: Not displayed)
[4...7] = Reserved
[8] = System logbook file size (stages, each 10 kB)

Notice: Before powering down the Control Unit, ensure that the system logbook is switched out (p9930[0] = 0).
If writing to the file is activated (p9930[2] = 1), writing to the file must be de-activated again before switching off the Control Unit (p9930[2] = 0) in order to ensure that the system logbook has been completely written to the file.

p9931[0...129] System logbook module selection / SYSLOG mod select.

CU_S110-DP, CU_S110-CAN, CU_S110-PN

Can be changed: U, T	**Calculated:** -	**Access level:** 4
Data type: Unsigned32	**Dyn. index:** -	**Func. diagram:** -
P-Group: -	**Unit group:** -	**Unit selection:** -
Not for motor type: -	**Scaling:** -	**Expert list:** 1
Min	**Max**	**Factory setting**
0000 hex	FFFF FFFF hex	0000 hex

Description: Only for service purposes.

p9932 Save system logbook EEPROM / SYSLOG EEPROM save

CU_S110-DP, CU_S110-CAN, CU_S110-PN

Can be changed: U, T	**Calculated:** -	**Access level:** 4
Data type: Unsigned8	**Dyn. index:** -	**Func. diagram:** -
P-Group: -	**Unit group:** -	**Unit selection:** -
Not for motor type: -	**Scaling:** -	**Expert list:** 1
Min	**Max**	**Factory setting**
0	255	0

Description: Only for service purposes.

r9975[0...7] System utilization measured / Sys util meas

CU_S110-DP, CU_S110-CAN, CU_S110-PN

Can be changed: -	**Calculated:** -	**Access level:** 4
Data type: FloatingPoint32	**Dyn. index:** -	**Func. diagram:** -
P-Group: -	**Unit group:** -	**Unit selection:** -
Not for motor type: -	**Scaling:** -	**Expert list:** 1
Min	**Max**	**Factory setting**
- [%]	- [%]	- [%]

Description: Displays the measured system utilization.

The higher the value displayed, the higher the system utilization.

Index:
[0] = Computing time utilization (min)
[1] = Computing time utilization (averaged)
[2] = Computing time utilization (max)
[3] = Largest total utilization (min)
[4] = Largest total utilization (averaged)
[5] = Largest total utilization (max)
[6] = Reserved
[7] = Reserved

Dependency: Refer to: r9976, r9979, r9980, r9981

Refer to: F01054, F01205

Note: Re index 3 ... 5:

The total utilizations are determined using all sampling times used. The largest total utilizations are mapped here. The sampling time with the largest total utilization is displayed in r9979.

Total utilization:

Computing time load of sampling time involved including load from higher-priority sampling times (interrupts).

r9976[0...7] System utilization / Sys util

CU_S110-DP, CU_S110-CAN, CU_S110-PN

Can be changed: -	**Calculated:** -	**Access level:** 3
Data type: FloatingPoint32	**Dyn. index:** -	**Func. diagram:** -
P-Group: -	**Unit group:** -	**Unit selection:** -
Not for motor type: -	**Scaling:** -	**Expert list:** 1
Min	**Max**	**Factory setting**
- [%]	- [%]	- [%]

Description: Displays the system utilization.

If the utilization is greater than 100%, fault F01054 is output.

Index:
[0] = Reserved
[1] = Computing time utilization
[2] = Reserved
[3] = Reserved
[4] = Reserved
[5] = Largest total utilization
[6] = Reserved
[7] = Reserved

Dependency: Refer to: r9979, r9980

Refer to: F01054, F01205

Note: Re index 1:

The value shows the total computing time load of the system.

Re index 5:

The total utilization is determined using all sampling times used. The largest total utilization is mapped here. The sampling time with the largest total utilization is displayed in r9979.

Total utilization:

Computing time load of sampling time involved including load from higher-priority sampling times (interrupts).

r9979 Sampling time with largest total utilization / t_sampl lg total

CU_S110-DP, CU_S110-CAN, CU_S110-PN

Can be changed: -	**Calculated:** -	**Access level:** 3
Data type: FloatingPoint32	**Dyn. index:** -	**Func. diagram:** -
P-Group: -	**Unit group:** -	**Unit selection:** -
Not for motor type: -	**Scaling:** -	**Expert list:** 1
Min	**Max**	**Factory setting**
- [µs]	- [µs]	- [µs]

Description: Displays the sampling time with the largest total utilization.

Dependency: Refer to: r7901, r9976
Refer to: F01054

Note: The largest total utilization is displayed in r9976[5].
Total utilization:
Computing time load of sampling time involved including load from higher-priority sampling times (interrupts).

r9980[0...101] Sampling times utilization calculated / t_sampl util calc

CU_S110-DP, CU_S110-CAN, CU_S110-PN

Can be changed: -	**Calculated:** -	**Access level:** 4
Data type: FloatingPoint32	**Dyn. index:** -	**Func. diagram:** -
P-Group: -	**Unit group:** -	**Unit selection:** -
Not for motor type: -	**Scaling:** -	**Expert list:** 1
Min	**Max**	**Factory setting**
- [%]	- [%]	- [%]

Description: Displays the calculated utilizations for the active sampling times based on the existing target topology.

Index:
[0] = Net utilization 0
[1] = Total utilization 0
[2] = Net utilization 1
[3] = Total utilization 1
[4] = Net utilization 2
[5] = Total utilization 2
[6] = Net utilization 3
[7] = Total utilization 3
[8] = Net utilization 4
[9] = Total utilization 4
[10] = Net utilization 5
[11] = Total utilization 5
[12] = Net utilization 6
[13] = Total utilization 6
[14] = Net utilization 7
[15] = Total utilization 7
[16] = Net utilization 8
[17] = Total utilization 8
[18] = Net utilization 9
[19] = Total utilization 9
[20] = Net utilization 10
[21] = Total utilization 10
[22] = Net utilization 11
[23] = Total utilization 11
[24] = Net utilization 12
[25] = Total utilization 12
[26] = Net utilization 13
[27] = Total utilization 13
[28] = Net utilization 14
[29] = Total utilization 14
[30] = Net utilization 15
[31] = Total utilization 15
[32] = Net utilization 16
[33] = Total utilization 16
[34] = Net utilization 17
[35] = Total utilization 17
[36] = Net utilization 18

[37] = Total utilization 18
[38] = Net utilization 19
[39] = Total utilization 19
[40] = Net utilization 20
[41] = Total utilization 20
[42] = Net utilization 21
[43] = Total utilization 21
[44] = Net utilization 22
[45] = Total utilization 22
[46] = Net utilization 23
[47] = Total utilization 23
[48] = Net utilization 24
[49] = Total utilization 24
[50] = Net utilization 25
[51] = Total utilization 25
[52] = Net utilization 26
[53] = Total utilization 26
[54] = Net utilization 27
[55] = Total utilization 27
[56] = Net utilization 28
[57] = Total utilization 28
[58] = Net utilization 29
[59] = Total utilization 29
[60] = Net utilization 30
[61] = Total utilization 30
[62] = Net utilization 31
[63] = Total utilization 31
[64] = Net utilization 32
[65] = Total utilization 32
[66] = Net utilization 33
[67] = Total utilization 33
[68] = Net utilization 34
[69] = Total utilization 34
[70] = Net utilization 35
[71] = Total utilization 35
[72] = Net utilization 36
[73] = Total utilization 36
[74] = Net utilization 37
[75] = Total utilization 37
[76] = Net utilization 38
[77] = Total utilization 38
[78] = Net utilization 39
[79] = Total utilization 39
[80] = Net utilization 40
[81] = Total utilization 40
[82] = Net utilization 41
[83] = Total utilization 41
[84] = Net utilization 42
[85] = Total utilization 42
[86] = Net utilization 43
[87] = Total utilization 43
[88] = Net utilization 44
[89] = Total utilization 44
[90] = Net utilization 45
[91] = Total utilization 45
[92] = Net utilization 46
[93] = Total utilization 46
[94] = Net utilization 47
[95] = Total utilization 47
[96] = Net utilization 48
[97] = Total utilization 48
[98] = Net utilization 49
[99] = Total utilization 49
[100] = Net utilization 50
[101] = Total utilization 50

Dependency: Refer to: r7901, r9976, r9979
Refer to: F01054

Note: The corresponding sampling times can be read out in parameter r7901.
Net utilization:
Computing time load that is only called by the sampling time involved.
Total utilization:
Computing time load of sampling time involved including load from higher-priority sampling times (interrupts).

r9981[0...101] Sampling times utilization measured / t_sampl util meas

CU_S110-DP, CU_S110-CAN, CU_S110-PN

Can be changed: -	**Calculated:** -	**Access level:** 4
Data type: FloatingPoint32	**Dyn. index:** -	**Func. diagram:** -
P-Group: -	**Unit group:** -	**Unit selection:** -
Not for motor type: -	**Scaling:** -	**Expert list:** 1
Min	**Max**	**Factory setting**
- [%]	- [%]	- [%]

Description: Displays the utilizations measured for the active sampling times.

Index:
[0] = Net utilization 0
[1] = Total utilization 0
[2] = Net utilization 1
[3] = Total utilization 1
[4] = Net utilization 2
[5] = Total utilization 2
[6] = Net utilization 3
[7] = Total utilization 3
[8] = Net utilization 4
[9] = Total utilization 4
[10] = Net utilization 5
[11] = Total utilization 5
[12] = Net utilization 6
[13] = Total utilization 6
[14] = Net utilization 7
[15] = Total utilization 7
[16] = Net utilization 8
[17] = Total utilization 8
[18] = Net utilization 9
[19] = Total utilization 9
[20] = Net utilization 10
[21] = Total utilization 10
[22] = Net utilization 11
[23] = Total utilization 11
[24] = Net utilization 12
[25] = Total utilization 12
[26] = Net utilization 13
[27] = Total utilization 13
[28] = Net utilization 14
[29] = Total utilization 14
[30] = Net utilization 15
[31] = Total utilization 15
[32] = Net utilization 16
[33] = Total utilization 16
[34] = Net utilization 17
[35] = Total utilization 17
[36] = Net utilization 18
[37] = Total utilization 18
[38] = Net utilization 19
[39] = Total utilization 19
[40] = Net utilization 20
[41] = Total utilization 20
[42] = Net utilization 21
[43] = Total utilization 21
[44] = Net utilization 22
[45] = Total utilization 22

[46] = Net utilization 23
[47] = Total utilization 23
[48] = Net utilization 24
[49] = Total utilization 24
[50] = Net utilization 25
[51] = Total utilization 25
[52] = Net utilization 26
[53] = Total utilization 26
[54] = Net utilization 27
[55] = Total utilization 27
[56] = Net utilization 28
[57] = Total utilization 28
[58] = Net utilization 29
[59] = Total utilization 29
[60] = Net utilization 30
[61] = Total utilization 30
[62] = Net utilization 31
[63] = Total utilization 31
[64] = Net utilization 32
[65] = Total utilization 32
[66] = Net utilization 33
[67] = Total utilization 33
[68] = Net utilization 34
[69] = Total utilization 34
[70] = Net utilization 35
[71] = Total utilization 35
[72] = Net utilization 36
[73] = Total utilization 36
[74] = Net utilization 37
[75] = Total utilization 37
[76] = Net utilization 38
[77] = Total utilization 38
[78] = Net utilization 39
[79] = Total utilization 39
[80] = Net utilization 40
[81] = Total utilization 40
[82] = Net utilization 41
[83] = Total utilization 41
[84] = Net utilization 42
[85] = Total utilization 42
[86] = Net utilization 43
[87] = Total utilization 43
[88] = Net utilization 44
[89] = Total utilization 44
[90] = Net utilization 45
[91] = Total utilization 45
[92] = Net utilization 46
[93] = Total utilization 46
[94] = Net utilization 47
[95] = Total utilization 47
[96] = Net utilization 48
[97] = Total utilization 48
[98] = Net utilization 49
[99] = Total utilization 49
[100] = Net utilization 50
[101] = Total utilization 50

Dependency: Refer to: r7901, r9975, r9980

Refer to: F01054

Note: The corresponding sampling times can be read out in parameter r7901.

Net utilization:

Computing time load that is only called by the sampling time involved.

Total utilization:

Computing time load of sampling time involved including load from higher-priority sampling times (interrupts).

r9982[0...4] Data memory utilization / Mem_util dat_mem

CU_S110-DP, CU_S110-CAN, CU_S110-PN

Can be changed: -	**Calculated:** -	**Access level:** 3
Data type: FloatingPoint32	**Dyn. index:** -	**Func. diagram:** -
P-Group: -	**Unit group:** -	**Unit selection:** -
Not for motor type: -	**Scaling:** -	**Expert list:** 1
Min	**Max**	**Factory setting**
- [%]	- [%]	- [%]

Description: Displays the calculated data memory utilization rates based on the existing target topology.

Index:
[0] = Fast Memory 1
[1] = Fast Memory 2
[2] = Fast Memory 3
[3] = Fast Memory 4
[4] = Reserved

Dependency: Refer to: F01068

r9983[0...4] Measured data memory utilization (actual load) / Mem_ut dat_mem ms

CU_S110-DP, CU_S110-CAN, CU_S110-PN

Can be changed: -	**Calculated:** -	**Access level:** 4
Data type: FloatingPoint32	**Dyn. index:** -	**Func. diagram:** -
P-Group: -	**Unit group:** -	**Unit selection:** -
Not for motor type: -	**Scaling:** -	**Expert list:** 1
Min	**Max**	**Factory setting**
- [%]	- [%]	- [%]

Description: Displays the measured data memory utilization rates based on the existing target topology.

Index:
[0] = Fast Memory 1
[1] = Fast Memory 2
[2] = Fast Memory 3
[3] = Fast Memory 4
[4] = Heap

Dependency: Refer to: F01068

r9984[0...4] Data memory utilization OA / Mem_ut dat_mem OA

CU_S110-DP, CU_S110-CAN, CU_S110-PN

Can be changed: -	**Calculated:** -	**Access level:** 3
Data type: FloatingPoint32	**Dyn. index:** -	**Func. diagram:** -
P-Group: -	**Unit group:** -	**Unit selection:** -
Not for motor type: -	**Scaling:** -	**Expert list:** 1
Min	**Max**	**Factory setting**
- [%]	- [%]	- [%]

Description: Displays the utilization of the data memory by OA applications.

Index:
[0] = Fast Memory 1
[1] = Fast Memory 2
[2] = Fast Memory 3
[3] = Fast Memory 4
[4] = Reserved

Dependency: Refer to: F01068

r9986[0...7] DRIVE-CLiQ system load / DQ system load

CU_S110-DP, CU_S110-CAN, CU_S110-PN

Can be changed: -	**Calculated:** -	**Access level:** 3
Data type: FloatingPoint32	**Dyn. index:** -	**Func. diagram:** -
P-Group: -	**Unit group:** -	**Unit selection:** -
Not for motor type: -	**Scaling:** -	**Expert list:** 1
Min	**Max**	**Factory setting**
- [%]	- [%]	- [%]

Description: Displays the calculated DRIVE-CLiQ system load based on the existing target topology.

The values are not made available until the RUNUP READY (800) state is adopted (see p3988).
Index 0 ... 7 corresponds to DRIVE-CLiQ socket X100 ... X107.

r9987[0...7] DRIVE-CLiQ bandwidth load / DQ bandw load

CU_S110-DP, CU_S110-CAN, CU_S110-PN

Can be changed: -	**Calculated:** -	**Access level:** 3
Data type: FloatingPoint32	**Dyn. index:** -	**Func. diagram:** -
P-Group: -	**Unit group:** -	**Unit selection:** -
Not for motor type: -	**Scaling:** -	**Expert list:** 1
Min	**Max**	**Factory setting**
- [%]	- [%]	- [%]

Description: Displays the calculated DRIVE-CLiQ bandwidth load based on the existing target topology.
The values are not made available until the RUNUP READY (800) state is adopted (see p3988).
Index 0 ... 7 corresponds to DRIVE-CLiQ socket X100 ... X107.

r9988[0...7] DRIVE-CLiQ DPRAM load / DQ DPRAM load

CU_S110-DP, CU_S110-CAN, CU_S110-PN

Can be changed: -	**Calculated:** -	**Access level:** 3
Data type: FloatingPoint32	**Dyn. index:** -	**Func. diagram:** -
P-Group: -	**Unit group:** -	**Unit selection:** -
Not for motor type: -	**Scaling:** -	**Expert list:** 1
Min	**Max**	**Factory setting**
- [%]	- [%]	- [%]

Description: Displays the calculated DRIVE-CLiQ DPRAM load based on the existing target topology.
The values are not made available until the RUNUP READY (800) state is adopted (see p3988).
Index 0 ... 7 corresponds to DRIVE-CLiQ socket X100 ... X107.

p9990 DO memory usage actual value determination selection / Mem_use ActVal sel

CU_S110-DP, CU_S110-CAN, CU_S110-PN

Can be changed: T	**Calculated:** -	**Access level:** 4
Data type: Unsigned16	**Dyn. index:** -	**Func. diagram:** -
P-Group: -	**Unit group:** -	**Unit selection:** -
Not for motor type: -	**Scaling:** -	**Expert list:** 1
Min	**Max**	**Factory setting**
0	65535	0

Description: The meaning of the parameter differs for reading and writing.
Read:
- Returns the number of memory areas monitored.
Write:
- Memory usage of a drive object: Enter drive object number
- Memory usage of the complete system: Enter value 65535

r9991[0...4] Memory usage actual values per DO / Mem_use ActVal/DO

CU_S110-DP, CU_S110-CAN, CU_S110-PN

Can be changed: -	**Calculated:** -	**Access level:** 4
Data type: Unsigned32	**Dyn. index:** -	**Func. diagram:** -
P-Group: -	**Unit group:** -	**Unit selection:** -
Not for motor type: -	**Scaling:** -	**Expert list:** 1
Min	**Max**	**Factory setting**
-	-	-

Index:
[0] = Fast Memory 1
[1] = Fast Memory 2
[2] = Fast Memory 3
[3] = Fast Memory 4
[4] = Heap

r9992[0...4] Memory usage setpoints per DO / Mem_use setp/DO

CU_S110-DP, CU_S110-CAN, CU_S110-PN

Can be changed: -	**Calculated:** -	**Access level:** 4
Data type: Unsigned32	**Dyn. index:** -	**Func. diagram:** -
P-Group: -	**Unit group:** -	**Unit selection:** -
Not for motor type: -	**Scaling:** -	**Expert list:** 1
Min	**Max**	**Factory setting**
-	-	-

Index: [0] = Fast Memory 1
[1] = Fast Memory 2
[2] = Fast Memory 3
[3] = Fast Memory 4
[4] = Heap

r9993[0...4] OA memory usage / Mem_use OA

CU_S110-DP, CU_S110-CAN, CU_S110-PN

Can be changed: -	**Calculated:** -	**Access level:** 4
Data type: Unsigned32	**Dyn. index:** -	**Func. diagram:** -
P-Group: -	**Unit group:** -	**Unit selection:** -
Not for motor type: -	**Scaling:** -	**Expert list:** 1
Min	**Max**	**Factory setting**
-	-	-

Index: [0] = Fast Memory 1
[1] = Fast Memory 2
[2] = Fast Memory 3
[3] = Fast Memory 4
[4] = Heap

p10001 SI delay time for test stop at DO / SI t_delay DO

SERVO_S110-DP, SERVO_S110-CAN, SERVO_S110-PN

Can be changed: C2(95)	**Calculated:** -	**Access level:** 3
Data type: FloatingPoint32	**Dyn. index:** -	**Func. diagram:** -
P-Group: Safety Integrated	**Unit group:** -	**Unit selection:** -
Not for motor type: -	**Scaling:** -	**Expert list:** 1
Min	**Max**	**Factory setting**
4.00 [ms]	2000.00 [ms]	500.00 [ms]

Description: Sets the delay time for testing the digital output.
Within this time, for a forced checking procedure of the digital output, the signal must have been detected via the corresponding readback input (p10047).

Dependency: Refer to: p10003, p10007, p10017, p10046

Note: The delay time must be set to a value greater than the debounce time (p10017).
Regardless of p10001, the forced checking procedure will pause for at least two safety monitoring clock cycles between each stage of the test.
The test stop is only performed if the safety output is being used (see p10042).

p10002 SI discrepancy monitoring time / SI discrep t_monit

SERVO_S110-DP, SERVO_S110-CAN, SERVO_S110-PN

Can be changed: C2(95)	**Calculated:** -	**Access level:** 3
Data type: FloatingPoint32	**Dyn. index:** -	**Func. diagram:** -
P-Group: Safety Integrated	**Unit group:** -	**Unit selection:** -
Not for motor type: -	**Scaling:** -	**Expert list:** 1
Min	**Max**	**Factory setting**
1.00 [ms]	2000.00 [ms]	500.00 [ms]

Description: Sets the monitoring time for the discrepancy for the digital inputs.
The signal states at the two associated digital inputs (F-DI) must assume the same state within this monitoring time.

Dependency: Refer to: p10102

Note: F-DI: Failsafe Digital Input

p10003 SI forced checking procedure timer / SI FCP Timer

SERVO_S110-DP, SERVO_S110-CAN, SERVO_S110-PN

Can be changed: C2(95)	**Calculated:** -	**Access level:** 3
Data type: FloatingPoint32	**Dyn. index:** -	**Func. diagram:** -
P-Group: Safety Integrated	**Unit group:** -	**Unit selection:** -
Not for motor type: -	**Scaling:** -	**Expert list:** 1
Min	**Max**	**Factory setting**
0.00 [h]	8760.00 [h]	8.00 [h]

Description: Sets the time to carry out the forced checking procedure (test stop).
Within the parameterized time, the digital inputs/outputs must must have been subject to a forced checking procedure at least once. The forced checking procedure is started with BI: p10007 = 0/1 signal.

Dependency: Refer to: p10002, p10007, p10046

p10006 SI acknowledgement internal event F-DI (processor 1) / SI ackn int evt P1

SERVO_S110-DP, SERVO_S110-CAN, SERVO_S110-PN

Can be changed: C2(95)	**Calculated:** -	**Access level:** 3
Data type: Integer16	**Dyn. index:** -	**Func. diagram:** 2848
P-Group: Safety Integrated	**Unit group:** -	**Unit selection:** -
Not for motor type: -	**Scaling:** -	**Expert list:** 1
Min	**Max**	**Factory setting**
0	255	0

Description: Select a safety-relevant digital input for the signal "acknowledge internal event" (internal fault).
The falling edge at this input resets the status "internal event" in the drive.

Value:
0: Statically active
1: F-DI 0
2: F-DI 1
3: F-DI 2
255: Statically inactive

Dependency: Refer to: p10106
Refer to: A01666, A30666

Note: F-DI: Failsafe Digital Input
If value = 0:
No terminal assigned, acknowledge input has a static zero value.

p10007 BI: SI forced checking procedure F-DO signal source / SI FCP F-DO s_src

SERVO_S110-DP, SERVO_S110-CAN, SERVO_S110-PN

Can be changed: C2(95)	**Calculated:** -	**Access level:** 3
Data type: Unsigned32 / Binary	**Dyn. index:** -	**Func. diagram:** 2848
P-Group: Safety Integrated	**Unit group:** -	**Unit selection:** -
Not for motor type: -	**Scaling:** -	**Expert list:** 1
Min	**Max**	**Factory setting**
-	-	0

Description: Selects an input terminal to start the test stop.
The test stop is started with a 0/1 signal at the input terminal and is then only possible if the drive is not in commissioning mode.

Dependency: Refer to: p10001, p10002, p10003, p10040, p10046

p10017 SI digital inputs debounce time (processor 1) / SI DI t_debounceP1

SERVO_S110-DP, SERVO_S110-CAN, SERVO_S110-PN

Can be changed: C2(95)	**Calculated:** -	**Access level:** 3
Data type: FloatingPoint32	**Dyn. index:** -	**Func. diagram:** -
P-Group: Safety Integrated	**Unit group:** -	**Unit selection:** -
Not for motor type: -	**Scaling:** -	**Expert list:** 1
Min	**Max**	**Factory setting**
0.00 [ms]	100.00 [ms]	0.00 [ms]

Description: Sets the debounce time for digital inputs.
The debounce time is accepted rounded off to whole milliseconds.

The debounce time acts on the following digital inputs:
- Fail-safe digital inputs (F-DI).
- Single-channel digital inputs (DI).
- Single-channel digital input 22 (DI 22, read back input for the forced checking procedure).

Dependency: Refer to: p10117

Note: Example:
Debounce time = 1 ms: Fault pulses of 1 ms are filtered; only pulses longer than 2 ms are processed.
Debounce time = 3 ms: Fault pulses of 3 ms are filtered; only pulses longer than 4 ms are processed.
The debounce result can be read in r10051.

p10022 SI STO input terminal (processor 1) / SI STO F-DI P1

SERVO_S110-DP, SERVO_S110-CAN, SERVO_S110-PN

Can be changed: C2(95)	**Calculated:** -	**Access level:** 3
Data type: Integer16	**Dyn. index:** -	**Func. diagram:** -
P-Group: Safety Integrated	**Unit group:** -	**Unit selection:** -
Not for motor type: -	**Scaling:** -	**Expert list:** 1
Min	**Max**	**Factory setting**
0	255	0

Description: Sets the fail-safe digital input (F-DI) for the "STO" function.

Value:
0: Statically active
1: F-DI 0
2: F-DI 1
3: F-DI 2
255: Statically inactive

Dependency: Refer to: p10122

Note: If value = 0:
No terminal assigned, safety function always active.
If value = 255:
No terminal assigned, safety function always inactive.
F-DI: Failsafe Digital Input
STO: Safe Torque Off

p10023 SI SS1 input terminal (processor 1) / SI SS1 F-DI P1

SERVO_S110-DP, SERVO_S110-CAN, SERVO_S110-PN

Can be changed: C2(95)	**Calculated:** -	**Access level:** 3
Data type: Integer16	**Dyn. index:** -	**Func. diagram:** -
P-Group: Safety Integrated	**Unit group:** -	**Unit selection:** -
Not for motor type: -	**Scaling:** -	**Expert list:** 1
Min	**Max**	**Factory setting**
0	255	0

Description: Sets the fail-safe digital input (F-DI) for the "SS1" function.

Value:
0: Statically active
1: F-DI 0
2: F-DI 1
3: F-DI 2
255: Statically inactive

Dependency: Refer to: p10123

Note: If value = 0:
No terminal assigned, safety function always active.
If value = 255:
No terminal assigned, safety function always inactive.
F-DI: Failsafe Digital Input
SS1: Safe Stop 1

p10024 SI SS2 input terminal (processor 1) / SI SS2 F-DI P1

SERVO_S110-DP, SERVO_S110-CAN, SERVO_S110-PN

Can be changed: C2(95)	**Calculated:** -	**Access level:** 3
Data type: Integer16	**Dyn. index:** -	**Func. diagram:** -
P-Group: Safety Integrated	**Unit group:** -	**Unit selection:** -
Not for motor type: -	**Scaling:** -	**Expert list:** 1
Min	**Max**	**Factory setting**
0	255	0

Description: Sets the fail-safe digital input (F-DI) for the "SS2" function.

Value:
0: Statically active
1: F-DI 0
2: F-DI 1
3: F-DI 2
255: Statically inactive

Note:
If value = 0:
No terminal assigned, safety function always active.
If value = 255:
No terminal assigned, safety function always inactive.
F-DI: Failsafe Digital Input
SS2: Safe Stop 2

p10025 SI SOS input terminal (processor 1) / SI SOS F-DI P1

SERVO_S110-DP, SERVO_S110-CAN, SERVO_S110-PN

Can be changed: C2(95)	**Calculated:** -	**Access level:** 3
Data type: Integer16	**Dyn. index:** -	**Func. diagram:** -
P-Group: Safety Integrated	**Unit group:** -	**Unit selection:** -
Not for motor type: -	**Scaling:** -	**Expert list:** 1
Min	**Max**	**Factory setting**
0	255	0

Description: Sets the fail-safe digital input (F-DI) for the "SOS" function.

Value:
0: Statically active
1: F-DI 0
2: F-DI 1
3: F-DI 2
255: Statically inactive

Note:
If value = 0:
No terminal assigned, safety function always active.
If value = 255:
No terminal assigned, safety function always inactive.
F-DI: Failsafe Digital Input
SOS: Safe Operating Stop

p10026 SI SLS input terminal (processor 1) / SI SLS F-DI P1

SERVO_S110-DP, SERVO_S110-CAN, SERVO_S110-PN

Can be changed: C2(95)	**Calculated:** -	**Access level:** 3
Data type: Integer16	**Dyn. index:** -	**Func. diagram:** -
P-Group: Safety Integrated	**Unit group:** -	**Unit selection:** -
Not for motor type: -	**Scaling:** -	**Expert list:** 1
Min	**Max**	**Factory setting**
0	255	0

Description: Sets the fail-safe digital input (F-DI) for the "SLS" function.

Value:
0: Statically active
1: F-DI 0
2: F-DI 1
3: F-DI 2
255: Statically inactive

Dependency: Refer to: p10126

Note: If value = 0:
No terminal assigned, safety function always active.
If value = 255:
No terminal assigned, safety function always inactive.
F-DI: Failsafe Digital Input
SLS: Safely-Limited Speed

p10027 SI SLS limit bit 0 input terminal (processor 1) / SI SLS lim 0 DI P1

SERVO_S110-DP, SERVO_S110-CAN, SERVO_S110-PN

Can be changed: C2(95)	**Calculated:** -	**Access level:** 3
Data type: Integer16	**Dyn. index:** -	**Func. diagram:** -
P-Group: Safety Integrated	**Unit group:** -	**Unit selection:** -
Not for motor type: -	**Scaling:** -	**Expert list:** 1
Min	**Max**	**Factory setting**
0	255	0

Description: Sets the fail-safe digital input (F-DI) for the limit value bit 0 of the "SLS" function.

Value:
0: Statically active
1: F-DI 0
2: F-DI 1
3: F-DI 2
255: Statically inactive

Note: If value = 0:
No terminal assigned, selection bit remains statically at "0".
If value = 255:
No terminal assigned, selection bit remains statically at "1".
F-DI: Failsafe Digital Input
SLS: Safely-Limited Speed

p10028 SI SLS limit bit 1 input terminal (processor 1) / SI SLS lim 1 DI P1

SERVO_S110-DP, SERVO_S110-CAN, SERVO_S110-PN

Can be changed: C2(95)	**Calculated:** -	**Access level:** 3
Data type: Integer16	**Dyn. index:** -	**Func. diagram:** -
P-Group: Safety Integrated	**Unit group:** -	**Unit selection:** -
Not for motor type: -	**Scaling:** -	**Expert list:** 1
Min	**Max**	**Factory setting**
0	255	0

Description: Sets the fail-safe digital input (F-DI) for the limit value bit 1 of the "SLS" function.

Value:
0: Statically active
1: F-DI 0
2: F-DI 1
3: F-DI 2
255: Statically inactive

Note: If value = 0:
No terminal assigned, selection bit remains statically at "0".
If value = 255:
No terminal assigned, selection bit remains statically at "1".
F-DI: Failsafe Digital Input
SLS: Safely-Limited Speed

p10030 SI SDI positive input terminal (processor 1) / SI SDI pos F-DI P1

SERVO_S110-DP, SERVO_S110-CAN, SERVO_S110-PN

Can be changed: C2(95)	**Calculated:** -	**Access level:** 3
Data type: Integer16	**Dyn. index:** -	**Func. diagram:** -
P-Group: Safety Integrated	**Unit group:** -	**Unit selection:** -
Not for motor type: -	**Scaling:** -	**Expert list:** 1
Min	**Max**	**Factory setting**
0	255	0

Description: Sets the fail-safe digital input (F-DI) for the "SDI positive" function.

Value:
0: Statically active
1: F-DI 0
2: F-DI 1
3: F-DI 2
255: Statically inactive

Note:
If value = 0:
No terminal assigned, safety function always active.
If value = 255:
No terminal assigned, safety function always inactive.
F-DI: Failsafe Digital Input
SDI: Safe Direction (safe motion direction)

p10031 SI SDI negative input terminal (processor 1) / SI SDI neg F-DI P1

SERVO_S110-DP, SERVO_S110-CAN, SERVO_S110-PN

Can be changed: C2(95)	**Calculated:** -	**Access level:** 3
Data type: Integer16	**Dyn. index:** -	**Func. diagram:** -
P-Group: Safety Integrated	**Unit group:** -	**Unit selection:** -
Not for motor type: -	**Scaling:** -	**Expert list:** 1
Min	**Max**	**Factory setting**
0	255	0

Description:
Sets the fail-safe digital input (F-DI) for the "SDI negative" function.

Value:
0: Statically active
1: F-DI 0
2: F-DI 1
3: F-DI 2
255: Statically inactive

Note:
If value = 0:
No terminal assigned, safety function always active.
If value = 255:
No terminal assigned, safety function always inactive.
F-DI: Failsafe Digital Input
SDI: Safe Direction (safe motion direction)

p10039 SI Safe State signal selection / SI Safe State Sel

SERVO_S110-DP, SERVO_S110-CAN, SERVO_S110-PN

Can be changed: C2(95)	**Calculated:** -	**Access level:** 3
Data type: Unsigned32	**Dyn. index:** -	**Func. diagram:** 2856
P-Group: Safety Integrated	**Unit group:** -	**Unit selection:** -
Not for motor type: -	**Scaling:** -	**Expert list:** 1
Min	**Max**	**Factory setting**
-	-	0000 0001 bin

Description:
Sets the signals for the drive group specific signal "Safe State".
Bit 0 = Power_removed
Bit 1 = SS1_active
Bit 2 = SS2_active
Bit 3 = SOS_active
Bit 4 = SLS_active
Bit 5 = SDI_pos_active
Bit 6 = SDI_neg_active

Bit field:

Bit	Signal name	1 signal	0 signal	FP
00	Power_removed	Selected	Not selected	-
01	SS1_active	Selected	Not selected	-
02	SS2_active	Selected	Not selected	-
03	SOS_active	Selected	Not selected	-
04	SLS_active	Selected	Not selected	-
05	SDI_pos_active	Selected	Not selected	-
06	SDI_neg_active	Selected	Not selected	-

Note: Bit = 0 signal --> not selected
Bit = 1 signal --> selected
The selected signals (high-active) are OR'ed The result of the logic operation results in the status "Safe State".

p10040 SI F-DI input mode / SI F-DI inp_mode

SERVO_S110-DP, SERVO_S110-CAN, SERVO_S110-PN

Can be changed: C2(95)	**Calculated:** -	**Access level:** 3
Data type: Unsigned32	**Dyn. index:** -	**Func. diagram:** -
P-Group: Safety Integrated	**Unit group:** -	**Unit selection:** -
Not for motor type: -	**Scaling:** -	**Expert list:** 1
Min	**Max**	**Factory setting**
-	-	0000 bin

Description: Sets the input mode for the safety digital inputs (F-DI).

Bit field:

Bit	Signal name	1 signal	0 signal	FP
00	F-DI 1 (X130.2)	NO contact	NC contact	2850
01	F-DI 2 (X130.5)	NO contact	NC contact	2850
02	F-DI 3 (X131.2)	NO contact	NC contact	2850

Note: Only an NC contact can be connected for the safety digital inputs not listed.

p10042[0...5] SI F-DO 0 signal sources / SI F-DO 0 S_src

SERVO_S110-DP, SERVO_S110-CAN, SERVO_S110-PN

Can be changed: C2(95)	**Calculated:** -	**Access level:** 3
Data type: Integer16	**Dyn. index:** -	**Func. diagram:** 2857
P-Group: Safety Integrated	**Unit group:** -	**Unit selection:** -
Not for motor type: -	**Scaling:** -	**Expert list:** 1
Min	**Max**	**Factory setting**
0	13	0

Description: Sets the signal sources for F-DO 0 (X131.5).
The 6 signal sources in p10042[0...5] are AND'ed and the result is output at F-DO 0.

Value:
0: No function
1: STO active
2: SS1 active
3: SS2 active
4: SOS active
5: SLS active
6: SSM feedback signal active
7: Safe state
8: SOS selected
9: Internal event
10: Active SLS stage bit 0
11: Active SLS stage bit 1
12: SDI positive active
13: SDI negative active

Index:
[0] = AND logic operation input 1
[1] = AND logic operation input 2
[2] = AND logic operation input 3
[3] = AND logic operation input 4
[4] = AND logic operation input 5
[5] = AND logic operation input 6

Note: F-DO: Failsafe Digital Output

p10046 SI F-DO feedback signal input activation / SI F-DO FS act

SERVO_S110-DP, SERVO_S110-CAN, SERVO_S110-PN

Can be changed: C2(95)	**Calculated:** -	**Access level:** 3
Data type: Unsigned32	**Dyn. index:** -	**Func. diagram:** -
P-Group: Safety Integrated	**Unit group:** -	**Unit selection:** -
Not for motor type: -	**Scaling:** -	**Expert list:** 1
Min	**Max**	**Factory setting**
-	-	0000 bin

Description: Activates the readback input for the safety digital output (F-DO)

The test mode for the particular safety digital output is set in p10047.

Bit field:	Bit	Signal name	1 signal	0 signal	FP
	00	Test F-DO 0	Test active	No test	-

Dependency: Refer to: p10001, p10003, p10007, p10047

Note: The test stop is only performed if the safety output of the Control Unit is being used (see p10042).

p10047 SI F-DO test stop mode / SI F-DO test mode

SERVO_S110-DP, SERVO_S110-CAN, SERVO_S110-PN

Can be changed: C2(95)	**Calculated:** -	**Access level:** 3
Data type: Integer16	**Dyn. index:** -	**Func. diagram:** -
P-Group: Safety Integrated	**Unit group:** -	**Unit selection:** -
Not for motor type: -	**Scaling:** -	**Expert list:** 1
Min	**Max**	**Factory setting**
0001 bin	0011 bin	0010 bin

Description: Sets the test stop mode for the safety digital output (F-DO)

Value:
1: Test mode 1 evaluation of int. diagnostic signal (passive load)
2: Test mode 2 read back F-DO in DI (relay circuit)
3: Test mode 3 read back F-DO in DI (actuator with feedback signal)

Dependency: Refer to: p10001, p10003, p10007, p10046

Note: The test stop is only performed if the safety output is being used (see p10042).

r10049 SI F-DI monitoring status (processor 1) / SI F-DI status P1

SERVO_S110-DP, SERVO_S110-CAN, SERVO_S110-PN

Can be changed: -	**Calculated:** -	**Access level:** 3
Data type: Unsigned32	**Dyn. index:** -	**Func. diagram:** -
P-Group: Safety Integrated	**Unit group:** -	**Unit selection:** -
Not for motor type: -	**Scaling:** -	**Expert list:** 1
Min	**Max**	**Factory setting**
-	-	-

Description: Displays the monitoring status of the fail-safe digital inputs (F-DI).
The F-DIs that are being used by the Safety Integrated functions are displayed.
If the module used has fewer than 3 F-DIs, "Freely available" is displayed for the F-DIs which are not in use.

Bit field:	Bit	Signal name	1 signal	0 signal	FP
	00	F-DI 0	Safety monitored	Freely available	-
	01	F-DI 1	Safety monitored	Freely available	-
	02	F-DI 2	Safety monitored	Freely available	-

Dependency:
p10006 / p10106
p10022 / p10122
p10023 / p10123
p10024 / p10124
p10025 / p10125
p10026 / p10126
p10027 / p10127
p10028 / p10128
p10030 / p10130
p10031 / p10131
p10036 / p10136
p10050 / p10150
Refer to: r10149

r10051.0...2 CO/BO: SI digital inputs status (processor 1) / SI DI status P1

SERVO_S110-DP, SERVO_S110-CAN, SERVO_S110-PN

Can be changed: -	**Calculated:** -	**Access level:** 3
Data type: Unsigned32	**Dyn. index:** -	**Func. diagram:** -
P-Group: Safety Integrated	**Unit group:** -	**Unit selection:** -
Not for motor type: -	**Scaling:** -	**Expert list:** 1
Min	**Max**	**Factory setting**
-	-	-

Description: Displays the single-channel debounced status of the digital inputs DI 16, DI 18, and DI 20.

Bit field:

Bit	Signal name	1 signal	0 signal	FP
00	F-DI 0 CU	High	Low	-
01	F-DI 1 CU	High	Low	-
02	F-DI 2 CU	High	Low	-

Dependency: Refer to: p9501, p9601, p10017, p10040, r10151

Note: If a safety function is assigned to an input (e.g. via p10022), then the following applies:

- logical "0": Safety function is selected
- logical "1": Safety function is de-selected

The interrelationship between the logical level and the external voltage level at the input depends on the parameterization (refer to p10040) of the input as either NC or NO contact and is aligned to the use of a safety function:

With 24 V at the input, NC contacts have a logical "1" level, for 0 V at the input, a logical "0" level.

This means that an NC/NC contact parameterization of 0 V at both inputs of the F-DI selects the safety function, for 24 V at both inputs, de-selects the safety function.

With 24 V at the input, NO contacts have a logical "0" level, for 0 V at the input, a logical "1" level.

This means that for an NC/NO contact parameterization, the level 0 V/24 V selects the safety function, the level 24 V/0 V de-selects the safety function.

F-DI: Failsafe Digital Input

The state of parameter r10151 is delayed by one monitoring clock cycle in relation to r10051.

The parameter is only updated in the following cases:

- If the Safety Extended Functions are enabled by means of activation via F-DI.
- If transfer of the F-DIs via PROFIsafe is enabled (see p9501).

In this case only the F-DIs transferred for PROFIsafe are displayed and updated (see p10050/p10150). All F-DIs which have not been transferred have a static zero value.

r10052.0 CO/BO: SI digital outputs status (processor 1) / SI DO status P1

SERVO_S110-DP, SERVO_S110-CAN, SERVO_S110-PN

Can be changed: -	**Calculated:** -	**Access level:** 3
Data type: Unsigned32	**Dyn. index:** -	**Func. diagram:** -
P-Group: Safety Integrated	**Unit group:** -	**Unit selection:** -
Not for motor type: -	**Scaling:** -	**Expert list:** 1
Min	**Max**	**Factory setting**
-	-	-

Description: Displays the status of digital output DO 16+ (X131.5) from processor 1.

Bit field:

Bit	Signal name	1 signal	0 signal	FP
00	DO 0	High	Low	2853

Note: F-DO: Failsafe Digital Output

p10101 SI delay time for test stop at DO / SI t_delay DO

SERVO_S110-DP, SERVO_S110-CAN, SERVO_S110-PN

Can be changed: C2(95)	**Calculated:** -	**Access level:** 3
Data type: FloatingPoint32	**Dyn. index:** -	**Func. diagram:** -
P-Group: Safety Integrated	**Unit group:** -	**Unit selection:** -
Not for motor type: -	**Scaling:** -	**Expert list:** 1
Min	**Max**	**Factory setting**
4.00 [ms]	2000.00 [ms]	500.00 [ms]

Description: Sets the delay time for testing the digital output.

Within this time, for a forced checking procedure of the digital output, the signal must have been detected via the corresponding readback input (p10047).

Dependency: Refer to: p10003, p10007, p10046

Note: The delay time must be set to a value greater than the debounce time (p10017).

Regardless of p10001, the forced checking procedure will pause for at least two safety monitoring clock cycles between each stage of the test.

The test stop is only performed if the safety output is being used (p10142).

p10102 SI discrepancy monitoring time (processor 2) / SI discr t_mon P2

SERVO_S110-DP, SERVO_S110-CAN, SERVO_S110-PN

Can be changed: C2(95)	**Calculated:** -	**Access level:** 3
Data type: FloatingPoint32	**Dyn. index:** -	**Func. diagram:** 2850, 2851
P-Group: Safety Integrated	**Unit group:** -	**Unit selection:** -
Not for motor type: -	**Scaling:** -	**Expert list:** 1
Min	**Max**	**Factory setting**
1.00 [ms]	2000.00 [ms]	500.00 [ms]

Description: Sets the monitoring time for the discrepancy for the digital inputs.

The signal states at the two associated digital inputs (F-DI) must assume the same state within this monitoring time.

Dependency: Refer to: p10002

Note: F-DI: Failsafe Digital Input

p10106 SI acknowledgement internal event F-DI (processor 2) / SI ackn int evt P2

SERVO_S110-DP, SERVO_S110-CAN, SERVO_S110-PN

Can be changed: C2(95)	**Calculated:** -	**Access level:** 3
Data type: Integer16	**Dyn. index:** -	**Func. diagram:** -
P-Group: Safety Integrated	**Unit group:** -	**Unit selection:** -
Not for motor type: -	**Scaling:** -	**Expert list:** 1
Min	**Max**	**Factory setting**
0	255	0

Description: Select a safety-relevant digital input for the signal "acknowledge internal event" (internal fault).

The falling edge at this input resets the status "internal event" in the drive.

Value:
0: Statically active
1: F-DI 0
2: F-DI 1
3: F-DI 2
255: Statically inactive

Dependency: Refer to: p10006

Note: If value = 0:

No terminal assigned, acknowledge input has a static zero value.

p10117 SI digital inputs debounce time (processor 2) / SI DI t_debounceP2

SERVO_S110-DP, SERVO_S110-CAN, SERVO_S110-PN

Can be changed: C2(95)	**Calculated:** -	**Access level:** 3
Data type: FloatingPoint32	**Dyn. index:** -	**Func. diagram:** -
P-Group: Safety Integrated	**Unit group:** -	**Unit selection:** -
Not for motor type: -	**Scaling:** -	**Expert list:** 1
Min	**Max**	**Factory setting**
0.00 [ms]	100.00 [ms]	0.00 [ms]

Description: Sets the debounce time for digital inputs.

The debounce time acts on the following digital inputs:

- Fail-safe digital inputs (F-DI).
- Single-channel digital input 22 (DI 22, read back input for the forced checking procedure).

The debounce time is accepted rounded off to whole milliseconds.

Dependency: Refer to: p10017

Note: Example:
Debounce time = 1 ms: Fault pulses of 1 ms are filtered; only pulses longer than 2 ms are processed.
Debounce time = 3 ms: Fault pulses of 3 ms are filtered; only pulses longer than 4 ms are processed.
The debounce result can be read in r10151.

p10122 SI STO input terminal (processor 2) / SI STO F-DI P2

SERVO_S110-DP, SERVO_S110-CAN, SERVO_S110-PN

Can be changed: C2(95)	**Calculated:** -	**Access level:** 3
Data type: Integer16	**Dyn. index:** -	**Func. diagram:** -
P-Group: Safety Integrated	**Unit group:** -	**Unit selection:** -
Not for motor type: -	**Scaling:** -	**Expert list:** 1
Min	**Max**	**Factory setting**
0	255	0

Description: Sets the fail-safe digital input (F-DI) for the "STO" function.

Value:
0: Statically active
1: F-DI 0
2: F-DI 1
3: F-DI 2
255: Statically inactive

Dependency: Refer to: p10022

Note: If value = 0:
No terminal assigned, safety function always active.
If value = 255:
No terminal assigned, safety function always inactive.
F-DI: Failsafe Digital Input
STO: Safe Torque Off

p10123 SI SS1 input terminal (processor 2) / SI SS1 F-DI P2

SERVO_S110-DP, SERVO_S110-CAN, SERVO_S110-PN

Can be changed: C2(95)	**Calculated:** -	**Access level:** 3
Data type: Integer16	**Dyn. index:** -	**Func. diagram:** -
P-Group: Safety Integrated	**Unit group:** -	**Unit selection:** -
Not for motor type: -	**Scaling:** -	**Expert list:** 1
Min	**Max**	**Factory setting**
0	255	0

Description: Sets the fail-safe digital input (F-DI) for the "SS1" function.

Value:
0: Statically active
1: F-DI 0
2: F-DI 1
3: F-DI 2
255: Statically inactive

Dependency: Refer to: p10023

Note: If value = 0:
No terminal assigned, safety function always active.
If value = 255:
No terminal assigned, safety function always inactive.
F-DI: Failsafe Digital Input
SS1: Safe Stop 1

p10124 SI SS2 input terminal (processor 2) / SI SS2 F-DI P2

SERVO_S110-DP, SERVO_S110-CAN, SERVO_S110-PN

Can be changed: C2(95)	**Calculated:** -	**Access level:** 3
Data type: Integer16	**Dyn. index:** -	**Func. diagram:** -
P-Group: Safety Integrated	**Unit group:** -	**Unit selection:** -
Not for motor type: -	**Scaling:** -	**Expert list:** 1
Min	**Max**	**Factory setting**
0	255	0

Description: Sets the fail-safe digital input (F-DI) for the "SS2" function.

Value:
0: Statically active
1: F-DI 0
2: F-DI 1
3: F-DI 2
255: Statically inactive

Note:
If value = 0:
No terminal assigned, safety function always active.
If value = 255:
No terminal assigned, safety function always inactive.
F-DI: Failsafe Digital Input
SS2: Safe Stop 2

p10125 SI SOS input terminal (processor 2) / SI SOS F-DI P2

SERVO_S110-DP, SERVO_S110-CAN, SERVO_S110-PN

Can be changed: C2(95)	**Calculated:** -	**Access level:** 3
Data type: Integer16	**Dyn. index:** -	**Func. diagram:** -
P-Group: Safety Integrated	**Unit group:** -	**Unit selection:** -
Not for motor type: -	**Scaling:** -	**Expert list:** 1
Min	**Max**	**Factory setting**
0	255	0

Description:
Sets the fail-safe digital input (F-DI) for the "SOS" function.

Value:
0: Statically active
1: F-DI 0
2: F-DI 1
3: F-DI 2
255: Statically inactive

Note:
If value = 0:
No terminal assigned, safety function always active.
If value = 255:
No terminal assigned, safety function always inactive.
F-DI: Failsafe Digital Input
SOS: Safe Operating Stop

p10126 SI SLS input terminal (processor 2) / SI SLS F-DI P2

SERVO_S110-DP, SERVO_S110-CAN, SERVO_S110-PN

Can be changed: C2(95)	**Calculated:** -	**Access level:** 3
Data type: Integer16	**Dyn. index:** -	**Func. diagram:** -
P-Group: Safety Integrated	**Unit group:** -	**Unit selection:** -
Not for motor type: -	**Scaling:** -	**Expert list:** 1
Min	**Max**	**Factory setting**
0	255	0

Description:
Sets the fail-safe digital input (F-DI) for the "SLS" function.

Value:
0: Statically active
1: F-DI 0
2: F-DI 1
3: F-DI 2
255: Statically inactive

Dependency:
Refer to: p10026

Note:
If value = 0:
No terminal assigned, safety function always active.
If value = 255:
No terminal assigned, safety function always inactive.
F-DI: Failsafe Digital Input
SLS: Safely-Limited Speed

p10127 SI SLS limit bit 0 input terminal (processor 2) / SI SLS lim 0 DI P2

SERVO_S110-DP, SERVO_S110-CAN, SERVO_S110-PN

Can be changed: C2(95)	**Calculated:** -	**Access level:** 3
Data type: Integer16	**Dyn. index:** -	**Func. diagram:** -
P-Group: Safety Integrated	**Unit group:** -	**Unit selection:** -
Not for motor type: -	**Scaling:** -	**Expert list:** 1
Min	**Max**	**Factory setting**
0	255	0

Description: Sets the fail-safe digital input (F-DI) for the limit value bit 0 of the "SLS" function.

Value:
0: Statically active
1: F-DI 0
2: F-DI 1
3: F-DI 2
255: Statically inactive

Note:
If value = 0:
No terminal assigned, selection bit remains statically at "0".
If value = 255:
No terminal assigned, selection bit remains statically at "1".
F-DI: Failsafe Digital Input
SLS: Safely-Limited Speed

p10128 SI SLS limit bit 1 input terminal (processor 2) / SI SLS lim 1 DI P2

SERVO_S110-DP, SERVO_S110-CAN, SERVO_S110-PN

Can be changed: C2(95)	**Calculated:** -	**Access level:** 3
Data type: Integer16	**Dyn. index:** -	**Func. diagram:** -
P-Group: Safety Integrated	**Unit group:** -	**Unit selection:** -
Not for motor type: -	**Scaling:** -	**Expert list:** 1
Min	**Max**	**Factory setting**
0	255	0

Description: Sets the fail-safe digital input (F-DI) for the limit value bit 1 of the "SLS" function.

Value:
0: Statically active
1: F-DI 0
2: F-DI 1
3: F-DI 2
255: Statically inactive

Note:
If value = 0:
No terminal assigned, selection bit remains statically at "0".
If value = 255:
No terminal assigned, selection bit remains statically at "1".
F-DI: Failsafe Digital Input
SLS: Safely-Limited Speed

p10130 SI SDI positive input terminal (processor 2) / SI SDI pos DI P2

SERVO_S110-DP, SERVO_S110-CAN, SERVO_S110-PN

Can be changed: C2(95)	**Calculated:** -	**Access level:** 3
Data type: Integer16	**Dyn. index:** -	**Func. diagram:** -
P-Group: Safety Integrated	**Unit group:** -	**Unit selection:** -
Not for motor type: -	**Scaling:** -	**Expert list:** 1
Min	**Max**	**Factory setting**
0	255	0

Description: Sets the fail-safe digital input (F-DI) for the "SDI positive" function.

Value:
0: Statically active
1: F-DI 0
2: F-DI 1
3: F-DI 2
255: Statically inactive

Note: If value = 0:
No terminal assigned, safety function always active.
If value = 255:
No terminal assigned, safety function always inactive.
F-DI: Failsafe Digital Input
SDI: Safe Direction (safe motion direction)

p10131 SI SDI negative input terminal (processor 2) / SI SDI neg DI P2

SERVO_S110-DP, SERVO_S110-CAN, SERVO_S110-PN

Can be changed: C2(95)	**Calculated:** -	**Access level:** 3
Data type: Integer16	**Dyn. index:** -	**Func. diagram:** -
P-Group: Safety Integrated	**Unit group:** -	**Unit selection:** -
Not for motor type: -	**Scaling:** -	**Expert list:** 1
Min	**Max**	**Factory setting**
0	255	0

Description: Sets the fail-safe digital input (F-DI) for the "SDI negative" function.

Value:
0: Statically active
1: F-DI 0
2: F-DI 1
3: F-DI 2
255: Statically inactive

Note: If value = 0:
No terminal assigned, safety function always active.
If value = 255:
No terminal assigned, safety function always inactive.
F-DI: Failsafe Digital Input
SDI: Safe Direction (safe motion direction)

p10139 SI Safe State signal selection (processor 2) / SI Safe State Sel

SERVO_S110-DP, SERVO_S110-CAN, SERVO_S110-PN

Can be changed: C2(95)	**Calculated:** -	**Access level:** 3
Data type: Unsigned32	**Dyn. index:** -	**Func. diagram:** 2856
P-Group: Safety Integrated	**Unit group:** -	**Unit selection:** -
Not for motor type: -	**Scaling:** -	**Expert list:** 1
Min	**Max**	**Factory setting**
-	-	0000 0001 bin

Description: Sets the signals for the drive group specific signal "Safe State".
Bit 0 = Power_removed
Bit 1 = SS1_active
Bit 2 = SS2_active
Bit 3 = SOS_active
Bit 4 = SLS_active
Bit 5 = SDI_pos_active
Bit 6 = SDI_neg_active

Bit field:

Bit	Signal name	1 signal	0 signal	FP
00	Power_removed	Selected	Not selected	-
01	SS1_active	Selected	Not selected	-
02	SS2_active	Selected	Not selected	-
03	SOS_active	Selected	Not selected	-
04	SLS_active	Selected	Not selected	-
05	SDI_pos_active	Selected	Not selected	-
06	SDI_neg_active	Selected	Not selected	-

Note: Bit = 0 signal --> not selected
Bit = 1 signal --> selected
The selected signals (high-active) are OR'ed The result of the logic operation results in the status "Safe State".

p10140 SI F-DI input mode (processor 2) / SI F-DI mode P2

SERVO_S110-DP, SERVO_S110-CAN, SERVO_S110-PN

Can be changed: C2(95) | **Calculated:** - | **Access level:** 3
Data type: Unsigned32 | **Dyn. index:** - | **Func. diagram:** -
P-Group: Safety Integrated | **Unit group:** - | **Unit selection:** -
Not for motor type: - | **Scaling:** - | **Expert list:** 1

Min	Max	Factory setting
-	-	0000 bin

Description: Sets the input mode for the safety digital inputs (F-DI).

Bit field:

Bit	Signal name	1 signal	0 signal	FP
00	F-DI 1 (X130.2)	NO contact	NC contact	2850
01	F-DI 2 (X130.5)	NO contact	NC contact	2850
02	F-DI 3 (X131.2)	NO contact	NC contact	2850

Note: Only an NC contact can be connected for the safety digital inputs not listed.

p10142[0...5] SI F-DO 0 signal sources (processor 2) / SI F-DO 0 S_src P2

SERVO_S110-DP, SERVO_S110-CAN, SERVO_S110-PN

Can be changed: C2(95) | **Calculated:** - | **Access level:** 3
Data type: Integer16 | **Dyn. index:** - | **Func. diagram:** 2857
P-Group: Safety Integrated | **Unit group:** - | **Unit selection:** -
Not for motor type: - | **Scaling:** - | **Expert list:** 1

Min	Max	Factory setting
0	13	0

Description: Sets the signal sources for F-DO 0 (X131.6).
The 6 signal sources in p10142[0...5] are AND'ed and the result is output at F-DO 0.

Value:
0: No function
1: STO active
2: SS1 active
3: SS2 active
4: SOS active
5: SLS active
6: SSM feedback signal active
7: Safe state
8: SOS selected
9: Internal event
10: Active SLS stage bit 0
11: Active SLS stage bit 1
12: SDI positive active
13: SDI negative active

Index:
[0] = AND logic operation input 1
[1] = AND logic operation input 2
[2] = AND logic operation input 3
[3] = AND logic operation input 4
[4] = AND logic operation input 5
[5] = AND logic operation input 6

Note: F-DO: Failsafe Digital Output

p10146 SI test sensor feedback signal / SI test sens FS

SERVO_S110-DP, SERVO_S110-CAN, SERVO_S110-PN

Can be changed: C2(95) | **Calculated:** - | **Access level:** 3
Data type: Unsigned32 | **Dyn. index:** - | **Func. diagram:** 2848
P-Group: Safety Integrated | **Unit group:** - | **Unit selection:** -
Not for motor type: - | **Scaling:** - | **Expert list:** 1

Min	Max	Factory setting
-	-	0000 bin

Description: Sets the test of the feedback line for forced checking procedure.

Bit field:

Bit	Signal name	1 signal	0 signal	FP
00	Test F-DO 0	Test active	No test	-

Note: F-DO: Failsafe Digital Output

p10147 SI F-DO test stop mode / SI F-DO test mode

SERVO_S110-DP, SERVO_S110-CAN, SERVO_S110-PN

Can be changed: C2(95) | **Calculated:** - | **Access level:** 3
Data type: Integer16 | **Dyn. index:** - | **Func. diagram:** -
P-Group: Safety Integrated | **Unit group:** - | **Unit selection:** -
Not for motor type: - | **Scaling:** - | **Expert list:** 1

Min	Max	Factory setting
0001 bin	0011 bin	0010 bin

Description: Sets the test stop mode for the safety digital output (F-DO)

Value:
1: Test mode 1 evaluation of int. diagnostic signal (passive load)
2: Test mode 2 read back F-DO in DI (relay circuit)
3: Test mode 3 read back F-DO in DI (actuator with feedback signal)

Dependency: Refer to: p10001, p10003, p10007, p10046

r10149 SI F-DI monitoring status (processor 2) / SI F-DI status P2

SERVO_S110-DP, SERVO_S110-CAN, SERVO_S110-PN

Can be changed: - | **Calculated:** - | **Access level:** 3
Data type: Unsigned32 | **Dyn. index:** - | **Func. diagram:** -
P-Group: Safety Integrated | **Unit group:** - | **Unit selection:** -
Not for motor type: - | **Scaling:** - | **Expert list:** 1

Min	Max	Factory setting
-	-	-

Description: Displays the monitoring status of the fail-safe digital inputs (F-DI).
The F-DIs that are being used by the Safety Integrated functions are displayed.
If the module used has fewer than 3 F-DIs, "Freely available" is displayed for the F-DIs which are not in use.

Bit field:

Bit	Signal name	1 signal	0 signal	FP
00	F-DI 0	Safety monitored	Freely available	-
01	F-DI 1	Safety monitored	Freely available	-
02	F-DI 2	Safety monitored	Freely available	-

Dependency:
p10006 / p10106
p10022 / p10122
p10023 / p10123
p10024 / p10124
p10025 / p10125
p10026 / p10126
p10027 / p10127
p10028 / p10128
p10030 / p10130
p10031 / p10131
p10036 / p10136
p10050 / p10150
Refer to: r10049

r10151.0...2 CO/BO: SI digital inputs status (processor 2) / SI DI status P2

SERVO_S110-DP, SERVO_S110-CAN, SERVO_S110-PN

Can be changed: - | **Calculated:** - | **Access level:** 3
Data type: Unsigned32 | **Dyn. index:** - | **Func. diagram:** -
P-Group: Safety Integrated | **Unit group:** - | **Unit selection:** -
Not for motor type: - | **Scaling:** - | **Expert list:** 1

Min	Max	Factory setting
-	-	-

Description: Displays the single-channel debounced status of the digital inputs DI 17, DI 19, and DI 21.

Bit field:

Bit	Signal name	1 signal	0 signal	FP
00	F-DI 0 second channel	High	Low	-
01	F-DI 1 second channel	High	Low	-
02	F-DI 2 second channel	High	Low	-

Dependency: Refer to: p9501, p9601, p10117, p10140

Note: F-DI: Failsafe Digital Input

If a safety function is assigned to an input (e.g. via p10122), then the following applies:

- logical "0": Safety function is selected
- logical "1": Safety function is de-selected

The interrelationship between the logical level and the external voltage level at the input depends on the parameterization (refer to p10140) of the input as either NC or NO contact and is aligned to the use of a safety function:

With 24 V at the input, NC contacts have a logical "1" level, for 0 V at the input, a logical "0" level.

This means that an NC/NC contact parameterization of 0 V at both inputs of the F-DI selects the safety function, for 24 V at both inputs, de-selects the safety function.

With 24 V at the input, NO contacts have a logical "0" level, for 0 V at the input, a logical "1" level.

This means that for an NC/NO contact parameterization, the level 0 V/24 V selects the safety function, the level 24 V/0 V de-selects the safety function.

The state of parameter r10151 is delayed by one monitoring clock cycle in relation to r10051.

The parameter is only updated in the following cases:

- If the Safety Extended Functions are enabled by means of activation via F-DI.
- If transfer of the F-DIs via PROFIsafe is enabled (see p9501).

In this case only the F-DIs transferred for PROFIsafe are displayed and updated (see p10050/p10150). All F-DIs which have not been transferred have a static zero value.

r10152.0 CO/BO: SI digital outputs status (processor 2) / SI DO status P2

SERVO_S110-DP, SERVO_S110-CAN, SERVO_S110-PN

Can be changed: -	**Calculated:** -	**Access level:** 3
Data type: Unsigned32	**Dyn. index:** -	**Func. diagram:** -
P-Group: Safety Integrated	**Unit group:** -	**Unit selection:** -
Not for motor type: -	**Scaling:** -	**Expert list:** 1
Min	**Max**	**Factory setting**
-	-	-

Description: Displays the status of digital output DO 16- (X131.6) from processor 2.

Bit field:

Bit	Signal name	1 signal	0 signal	FP
00	DO 0	High	Low	2853

Note: F-DO: Failsafe Digital Output

p20000[0...9] Run-time group property / RTG property

SERVO_S110-DP (FBLOCKS), SERVO_S110-CAN (FBLOCKS), SERVO_S110-PN (FBLOCKS)

Can be changed: T	**Calculated:** -	**Access level:** 1
Data type: Integer16	**Dyn. index:** -	**Func. diagram:** -
P-Group: -	**Unit group:** -	**Unit selection:** -
Not for motor type: -	**Scaling:** -	**Expert list:** 1
Min	**Max**	**Factory setting**
0	9003	0

Description: Allocates properties to run-time groups 0 to 9.

This property comprises the sampling time and for p20000[x] = 9003, the instant of the call within the sampling time.

Index x of p20000 corresponds to the number of the run-time group.

p20000[0] is used to set the property of run-time group 0.

...

p20000[9] is used to set the property of run-time group 9.

p20000[x] = 0 run-time group is not calculated.

p20000[x] = 1 free run-time group T_sample = 1 * r20002

p20000[x] = 2 free run-time group T_sample = 2 * r20002

p20000[x] = 3 free run-time group T_sample = 3 * r20002

p20000[x] = 4 free run-time group T_sample = 4 * r20002

...

p20000[x] = 255 free run-time group T_sample = 255 * r20002

p20000[x] = 256 free run-time group T_sample = 256 * r20002

p20000[x] = 1001 free run-time group T_sample = 1 * r20003
p20000[x] = 1002 free run-time group T_sample = 2 * r20003
p20000[x] = 1003 free run-time group T_sample = 3 * r20003
p20000[x] = 1004 free run-time group T_sample = 4 * r20003
p20000[x] = 1005 free run-time group T_sample = 5 * r20003
p20000[x] = 1006 free run-time group T_sample = 6 * r20003
p20000[x] = 1008 free run-time group T_sample = 8 * r20003
p20000[x] = 1010 free run-time group T_sample = 10 * r20003
p20000[x] = 1012 free run-time group T_sample = 12 * r20003
p20000[x] = 1016 free run-time group T_sample = 16 * r20003
p20000[x] = 1020 free run-time group T_sample = 20 * r20003
p20000[x] = 1024 free run-time group T_sample = 24 * r20003
p20000[x] = 1032 free run-time group T_sample = 32 * r20003
p20000[x] = 1040 free run-time group T_sample = 40 * r20003
p20000[x] = 1048 free run-time group T_sample = 48 * r20003
p20000[x] = 1064 free run-time group T_sample = 64 * r20003
p20000[x] = 1096 free run-time group T_sample = 96 * r20003
p20000[x] = 9003 fixed run-time group "calculate before setpoint channel" (only VECTOR, SERVO)

Value:

0: Do not calculate
1: T = 1 * r20002
2: T = 2 * r20002
3: T = 3 * r20002
4: T = 4 * r20002
5: T = 5 * r20002
6: T = 6 * r20002
7: T = 7 * r20002
8: T = 8 * r20002
9: T = 9 * r20002
10: T = 10 * r20002
11: T = 11 * r20002
12: T = 12 * r20002
13: T = 13 * r20002
14: T = 14 * r20002
15: T = 15 * r20002
16: T = 16 * r20002
17: T = 17 * r20002
18: T = 18 * r20002
19: T = 19 * r20002
20: T = 20 * r20002
21: T = 21 * r20002
22: T = 22 * r20002
23: T = 23 * r20002
24: T = 24 * r20002
25: T = 25 * r20002
26: T = 26 * r20002
27: T = 27 * r20002
28: T = 28 * r20002
29: T = 29 * r20002
30: T = 30 * r20002
31: T = 31 * r20002
32: T = 32 * r20002
33: T = 33 * r20002
34: T = 34 * r20002
35: T = 35 * r20002
36: T = 36 * r20002
37: T = 37 * r20002
38: T = 38 * r20002
39: T = 39 * r20002
40: T = 40 * r20002
41: T = 41 * r20002
42: T = 42 * r20002
43: T = 43 * r20002

44: T = 44 * r20002
45: T = 45 * r20002
46: T = 46 * r20002
47: T = 47 * r20002
48: T = 48 * r20002
49: T = 49 * r20002
50: T = 50 * r20002
51: T = 51 * r20002
52: T = 52 * r20002
53: T = 53 * r20002
54: T = 54 * r20002
55: T = 55 * r20002
56: T = 56 * r20002
57: T = 57 * r20002
58: T = 58 * r20002
59: T = 59 * r20002
60: T = 60 * r20002
61: T = 61 * r20002
62: T = 62 * r20002
63: T = 63 * r20002
64: T = 64 * r20002
65: T = 65 * r20002
66: T = 66 * r20002
67: T = 67 * r20002
68: T = 68 * r20002
69: T = 69 * r20002
70: T = 70 * r20002
71: T = 71 * r20002
72: T = 72 * r20002
73: T = 73 * r20002
74: T = 74 * r20002
75: T = 75 * r20002
76: T = 76 * r20002
77: T = 77 * r20002
78: T = 78 * r20002
79: T = 79 * r20002
80: T = 80 * r20002
81: T = 81 * r20002
82: T = 82 * r20002
83: T = 83 * r20002
84: T = 84 * r20002
85: T = 85 * r20002
86: T = 86 * r20002
87: T = 87 * r20002
88: T = 88 * r20002
89: T = 89 * r20002
90: T = 90 * r20002
91: T = 91 * r20002
92: T = 92 * r20002
93: T = 93 * r20002
94: T = 94 * r20002
95: T = 95 * r20002
96: T = 96 * r20002
97: T = 97 * r20002
98: T = 98 * r20002
99: T = 99 * r20002
100: T = 100 * r20002
101: T = 101 * r20002
102: T = 102 * r20002
103: T = 103 * r20002
104: T = 104 * r20002
105: T = 105 * r20002
106: T = 106 * r20002
107: T = 107 * r20002
108: T = 108 * r20002
109: T = 109 * r20002

110: T = 110 * r20002
111: T = 111 * r20002
112: T = 112 * r20002
113: T = 113 * r20002
114: T = 114 * r20002
115: T = 115 * r20002
116: T = 116 * r20002
117: T = 117 * r20002
118: T = 118 * r20002
119: T = 119 * r20002
120: T = 120 * r20002
121: T = 121 * r20002
122: T = 122 * r20002
123: T = 123 * r20002
124: T = 124 * r20002
125: T = 125 * r20002
126: T = 126 * r20002
127: T = 127 * r20002
128: T = 128 * r20002
129: T = 129 * r20002
130: T = 130 * r20002
131: T = 131 * r20002
132: T = 132 * r20002
133: T = 133 * r20002
134: T = 134 * r20002
135: T = 135 * r20002
136: T = 136 * r20002
137: T = 137 * r20002
138: T = 138 * r20002
139: T = 139 * r20002
140: T = 140 * r20002
141: T = 141 * r20002
142: T = 142 * r20002
143: T = 143 * r20002
144: T = 144 * r20002
145: T = 145 * r20002
146: T = 146 * r20002
147: T = 147 * r20002
148: T = 148 * r20002
149: T = 149 * r20002
150: T = 150 * r20002
151: T = 151 * r20002
152: T = 152 * r20002
153: T = 153 * r20002
154: T = 154 * r20002
155: T = 155 * r20002
156: T = 156 * r20002
157: T = 157 * r20002
158: T = 158 * r20002
159: T = 159 * r20002
160: T = 160 * r20002
161: T = 161 * r20002
162: T = 162 * r20002
163: T = 163 * r20002
164: T = 164 * r20002
165: T = 165 * r20002
166: T = 166 * r20002
167: T = 167 * r20002
168: T = 168 * r20002
169: T = 169 * r20002
170: T = 170 * r20002
171: T = 171 * r20002
172: T = 172 * r20002
173: T = 173 * r20002
174: T = 174 * r20002
175: T = 175 * r20002

176: T = 176 * r20002
177: T = 177 * r20002
178: T = 178 * r20002
179: T = 179 * r20002
180: T = 180 * r20002
181: T = 181 * r20002
182: T = 182 * r20002
183: T = 183 * r20002
184: T = 184 * r20002
185: T = 185 * r20002
186: T = 186 * r20002
187: T = 187 * r20002
188: T = 188 * r20002
189: T = 189 * r20002
190: T = 190 * r20002
191: T = 191 * r20002
192: T = 192 * r20002
193: T = 193 * r20002
194: T = 194 * r20002
195: T = 195 * r20002
196: T = 196 * r20002
197: T = 197 * r20002
198: T = 198 * r20002
199: T = 199 * r20002
200: T = 200 * r20002
201: T = 201 * r20002
202: T = 202 * r20002
203: T = 203 * r20002
204: T = 204 * r20002
205: T = 205 * r20002
206: T = 206 * r20002
207: T = 207 * r20002
208: T = 208 * r20002
209: T = 209 * r20002
210: T = 210 * r20002
211: T = 211 * r20002
212: T = 212 * r20002
213: T = 213 * r20002
214: T = 214 * r20002
215: T = 215 * r20002
216: T = 216 * r20002
217: T = 217 * r20002
218: T = 218 * r20002
219: T = 219 * r20002
220: T = 220 * r20002
221: T = 221 * r20002
222: T = 222 * r20002
223: T = 223 * r20002
224: T = 224 * r20002
225: T = 225 * r20002
226: T = 226 * r20002
227: T = 227 * r20002
228: T = 228 * r20002
229: T = 229 * r20002
230: T = 230 * r20002
231: T = 231 * r20002
232: T = 232 * r20002
233: T = 233 * r20002
234: T = 234 * r20002
235: T = 235 * r20002
236: T = 236 * r20002
237: T = 237 * r20002
238: T = 238 * r20002
239: T = 239 * r20002
240: T = 240 * r20002
241: T = 241 * r20002

242: T = 242 * r20002
243: T = 243 * r20002
244: T = 244 * r20002
245: T = 245 * r20002
246: T = 246 * r20002
247: T = 247 * r20002
248: T = 248 * r20002
249: T = 249 * r20002
250: T = 250 * r20002
251: T = 251 * r20002
252: T = 252 * r20002
253: T = 253 * r20002
254: T = 254 * r20002
255: T = 255 * r20002
256: T = 256 * r20002
1001: T = 1 * r20003
1002: T = 2 * r20003
1003: T = 3 * r20003
1004: T = 4 * r20003
1005: T = 5 * r20003
1006: T = 6 * r20003
1008: T = 8 * r20003
1010: T = 10 * r20003
1012: T = 12 * r20003
1016: T = 16 * r20003
1020: T = 20 * r20003
1024: T = 24 * r20003
1032: T = 32 * r20003
1040: T = 40 * r20003
1048: T = 48 * r20003
1064: T = 64 * r20003
1080: T = 80 * r20003
1096: T = 96 * r20003
9003: Before setp chann

Index: [0] = Run-time group 0
[1] = Run-time group 1
[2] = Run-time group 2
[3] = Run-time group 3
[4] = Run-time group 4
[5] = Run-time group 5
[6] = Run-time group 6
[7] = Run-time group 7
[8] = Run-time group 8
[9] = Run-time group 9

Dependency: Refer to: r20008

Caution: The assignment of the properties of the run-time groups should not be changed on drives in operation as this could result in discontinuous signal transitions depending on the blocks used. At the 1st arithmetic cycle after the change, the respective internal initialization value is present at the block connections and in each subsequent cycle the calculated value is then present.

Note: Re value = 1 ... 256:

This value can only be set if, for sampling time T_sample of this run-time group, the following applies: 1 ms <= T_sample <= r20003.

If value = 9003:

The fixed run-time groups p20000[x] = 9003 log on with the sampling time of the setpoint channel, although the sampling time must be at least 1 ms. If, as a result of this limit, the actual sampling time deviates from the sampling time of the setpoint channel p0115[3], alarm A20103 is output. Another run-time group with a sampling time >= 1 ms should be selected. "Calculate before setpoint channel" means before function diagrams 3010, 3020, 3030, 3040, etc. are calculated, if the setpoint channel is activated (p0108.8 = 1). If, e.g. for SERVO, a setpoint channel has not been configured (p0108.8 = 0), then the calculation is made before function diagram 3095.

r20001[0...9] Run-time group sampling time / RTG sampling time

SERVO_S110-DP (FBLOCKS), SERVO_S110-CAN (FBLOCKS), SERVO_S110-PN (FBLOCKS)

Can be changed: -	**Calculated:** -	**Access level:** 1
Data type: FloatingPoint32	**Dyn. index:** -	**Func. diagram:** -
P-Group: -	**Unit group:** -	**Unit selection:** -
Not for motor type: -	**Scaling:** -	**Expert list:** 1
Min	**Max**	**Factory setting**
- [ms]	- [ms]	- [ms]

Description: Displays the current sampling time of the run-time group 0 to 9.

Index:
[0] = Run-time group 0
[1] = Run-time group 1
[2] = Run-time group 2
[3] = Run-time group 3
[4] = Run-time group 4
[5] = Run-time group 5
[6] = Run-time group 6
[7] = Run-time group 7
[8] = Run-time group 8
[9] = Run-time group 9

r20002 Basis sampling time, hardware / Basis samp time HW

SERVO_S110-DP (FBLOCKS), SERVO_S110-CAN (FBLOCKS), SERVO_S110-PN (FBLOCKS)

Can be changed: -	**Calculated:** -	**Access level:** 1
Data type: FloatingPoint32	**Dyn. index:** -	**Func. diagram:** -
P-Group: -	**Unit group:** -	**Unit selection:** -
Not for motor type: -	**Scaling:** -	**Expert list:** 1
Min	**Max**	**Factory setting**
- [ms]	- [ms]	- [ms]

Description: Displays the lowest sampling time effective at this drive object for values 1 to 256 of p20000.
T_sample = p20000 * r20002

r20003 Basis sampling time, software / Basis samp time SW

SERVO_S110-DP (FBLOCKS), SERVO_S110-CAN (FBLOCKS), SERVO_S110-PN (FBLOCKS)

Can be changed: -	**Calculated:** -	**Access level:** 1
Data type: FloatingPoint32	**Dyn. index:** -	**Func. diagram:** -
P-Group: -	**Unit group:** -	**Unit selection:** -
Not for motor type: -	**Scaling:** -	**Expert list:** 1
Min	**Max**	**Factory setting**
- [ms]	- [ms]	- [ms]

Description: Displays the sampling time as factor effective on this drive object for values 1001 to 1096 of p20000.
T_sample = (p20000 - 1000) * r20003

r20005[0...9] Average computing time load of the run-time groups / Comp_load RTG

SERVO_S110-DP (FBLOCKS), SERVO_S110-CAN (FBLOCKS), SERVO_S110-PN (FBLOCKS)

Can be changed: -	**Calculated:** -	**Access level:** 3
Data type: FloatingPoint32	**Dyn. index:** -	**Func. diagram:** -
P-Group: -	**Unit group:** -	**Unit selection:** -
Not for motor type: -	**Scaling:** -	**Expert list:** 1
Min	**Max**	**Factory setting**
- [%]	- [%]	- [%]

Description: Share of the average computing time load which the FBLOCKS run-time group contributes to the overall computing time load for the drive unit (r9976).

Index:
[0] = Run-time group 0
[1] = Run-time group 1
[2] = Run-time group 2
[3] = Run-time group 3
[4] = Run-time group 4
[5] = Run-time group 5
[6] = Run-time group 6

[7] = Run-time group 7
[8] = Run-time group 8
[9] = Run-time group 9

Note: The run-time group to be measured has to be logged on (p20000[x] > 0).

The value for the computation time load is calculated in the drive unit using the project loaded. As such, the r20005[x] values are not available in the expert list in SCOUT/STARTER offline mode.

r20008[0...12] Hardware sampling times available / HW t_samp

SERVO_S110-DP (FBLOCKS), SERVO_S110-CAN (FBLOCKS), SERVO_S110-PN (FBLOCKS)

Can be changed: -	**Calculated:** -	**Access level:** 3
Data type: FloatingPoint32	**Dyn. index:** -	**Func. diagram:** -
P-Group: -	**Unit group:** -	**Unit selection:** -
Not for motor type: -	**Scaling:** -	**Expert list:** 1
Min	**Max**	**Factory setting**
- [ms]	- [ms]	- [ms]

Description: Displays the assignment of the available hardware sampling times of the drive unit.

The term "hardware sampling times" refers to those r20002 sampling times that are formed as a multiple of the basic sampling time and always < r20003.

Dependency: Refer to: p20000

Notice: For internal purposes, the drive unit always requires at least two (or several, depending on the parameterization of p0115 of the drive objects) free hardware sampling times. Therefore the current number of hardware sampling times that are still free can be read out in r7903.

If r7903=0, no additional sampling time that differs from r20008[0...12] can be provided from the Control Unit. If, when selecting in this state, a run-time group with a sampling time < r20003 (p20000 <= 255) is to be set in p20000, only run-time groups whose sampling time is already provided in r20008[0...12] can be selected.

Note: The 13 different sampling times available are displayed in r20008[0...12].

If the value of r20008[0...12] is not equal to 0, then it specifies the sampling time in ms.

A sampling time that is provided can be simultaneously used by system functions, several FBLOCKS run-time groups, and several DCC run-time groups.

If the value of r20008[0...12] = 0, then this sampling time can still be freely assigned. It should be noted that the basic system, depending on the selected basic sampling times p0115[0], requires at least two (sometimes several) freely assignable hardware sampling times for internal functions. The number of hardware sampling times that can still be freely assigned can be read out in r7903.

r20008[11] = 99999.00000 --> Hardware sampling time is not supported.

r20008[12] = 99999.00000 --> Hardware sampling time is not supported.

The sampling time of run-time groups that have been assigned to the PROFIBUS run-time groups (p20000 = 4000 ... 4004) is not displayed in r20008. For this sampling time, one of the internally and permanently assigned hardware sampling times is used.

p20020 Computing time measurement run-time group / t_meas RTG

SERVO_S110-DP (FBLOCKS), SERVO_S110-CAN (FBLOCKS), SERVO_S110-PN (FBLOCKS)

Can be changed: U, T	**Calculated:** -	**Access level:** 4
Data type: Unsigned32	**Dyn. index:** -	**Func. diagram:** -
P-Group: -	**Unit group:** -	**Unit selection:** -
Not for motor type: -	**Scaling:** -	**Expert list:** 1
Min	**Max**	**Factory setting**
0	10	0

Description: Only for internal Siemens service purposes.

p20022 Computing time measurement, duration / t_meas duration

SERVO_S110-DP (FBLOCKS), SERVO_S110-CAN (FBLOCKS), SERVO_S110-PN (FBLOCKS)

Can be changed: U, T	**Calculated:** -	**Access level:** 4
Data type: Unsigned32	**Dyn. index:** -	**Func. diagram:** -
P-Group: -	**Unit group:** -	**Unit selection:** -
Not for motor type: -	**Scaling:** -	**Expert list:** 1
Min	**Max**	**Factory setting**
60 [s]	10000 [s]	60 [s]

Description: Only for internal Siemens service purposes.

r20024[0...9] Computing time, minimum value / t_comp min.

SERVO_S110-DP (FBLOCKS), SERVO_S110-CAN (FBLOCKS), SERVO_S110-PN (FBLOCKS)

Can be changed: -	**Calculated:** -	**Access level:** 4
Data type: FloatingPoint32	**Dyn. index:** -	**Func. diagram:** -
P-Group: -	**Unit group:** -	**Unit selection:** -
Not for motor type: -	**Scaling:** -	**Expert list:** 1
Min	**Max**	**Factory setting**
- [µs]	- [µs]	- [µs]

Description: Only for internal Siemens service purposes.

Index:
[0] = Run-time group 0
[1] = Run-time group 1
[2] = Run-time group 2
[3] = Run-time group 3
[4] = Run-time group 4
[5] = Run-time group 5
[6] = Run-time group 6
[7] = Run-time group 7
[8] = Run-time group 8
[9] = Run-time group 9

r20025[0...9] Computing time, mean value / t_comp average

SERVO_S110-DP (FBLOCKS), SERVO_S110-CAN (FBLOCKS), SERVO_S110-PN (FBLOCKS)

Can be changed: -	**Calculated:** -	**Access level:** 4
Data type: FloatingPoint32	**Dyn. index:** -	**Func. diagram:** -
P-Group: -	**Unit group:** -	**Unit selection:** -
Not for motor type: -	**Scaling:** -	**Expert list:** 1
Min	**Max**	**Factory setting**
- [µs]	- [µs]	- [µs]

Description: Only for internal Siemens service purposes.

Index:
[0] = Run-time group 0
[1] = Run-time group 1
[2] = Run-time group 2
[3] = Run-time group 3
[4] = Run-time group 4
[5] = Run-time group 5
[6] = Run-time group 6
[7] = Run-time group 7
[8] = Run-time group 8
[9] = Run-time group 9

r20026[0...9] Computing time, maximum value / t_comp max.

SERVO_S110-DP (FBLOCKS), SERVO_S110-CAN (FBLOCKS), SERVO_S110-PN (FBLOCKS)

Can be changed: -	**Calculated:** -	**Access level:** 4
Data type: FloatingPoint32	**Dyn. index:** -	**Func. diagram:** -
P-Group: -	**Unit group:** -	**Unit selection:** -
Not for motor type: -	**Scaling:** -	**Expert list:** 1
Min	**Max**	**Factory setting**
- [µs]	- [µs]	- [µs]

Description: Only for internal Siemens service purposes.

Index:
[0] = Run-time group 0
[1] = Run-time group 1
[2] = Run-time group 2
[3] = Run-time group 3
[4] = Run-time group 4
[5] = Run-time group 5
[6] = Run-time group 6
[7] = Run-time group 7
[8] = Run-time group 8
[9] = Run-time group 9

p20030[0...3] BI: AND 0 inputs / AND 0 inputs

SERVO_S110-DP (FBLOCKS), SERVO_S110-CAN (FBLOCKS), SERVO_S110-PN (FBLOCKS)

Can be changed: T	**Calculated:** -	**Access level:** 1
Data type: Unsigned32 / Binary	**Dyn. index:** -	**Func. diagram:** 7210
P-Group: -	**Unit group:** -	**Unit selection:** -
Not for motor type: -	**Scaling:** -	**Expert list:** 1
Min	**Max**	**Factory setting**
-	-	0

Description: Sets the signal source of input quantities I0, I1, I2, I3 of instance AND 0 of the AND function block.

Index:
[0] = Input I0
[1] = Input I1
[2] = Input I2
[3] = Input I3

r20031 BO: AND 0 output Q / AND 0 output Q

SERVO_S110-DP (FBLOCKS), SERVO_S110-CAN (FBLOCKS), SERVO_S110-PN (FBLOCKS)

Can be changed: -	**Calculated:** -	**Access level:** 1
Data type: Unsigned32	**Dyn. index:** -	**Func. diagram:** 7210
P-Group: -	**Unit group:** -	**Unit selection:** -
Not for motor type: -	**Scaling:** -	**Expert list:** 1
Min	**Max**	**Factory setting**
-	-	-

Description: Display parameter for binary quantity Q = I0 & I1 & I2 & I3 of instance AND 0 of the AND function block.

p20032 AND 0 run-time group / AND 0 RTG

SERVO_S110-DP (FBLOCKS), SERVO_S110-CAN (FBLOCKS), SERVO_S110-PN (FBLOCKS)

Can be changed: T	**Calculated:** -	**Access level:** 1
Data type: Integer16	**Dyn. index:** -	**Func. diagram:** 7210
P-Group: -	**Unit group:** -	**Unit selection:** -
Not for motor type: -	**Scaling:** -	**Expert list:** 1
Min	**Max**	**Factory setting**
0	9999	9999

Description: Setting parameter for the run-time group in which the instance AND 0 of the AND function block is to be called.

Value:
0: Run-time group 0
1: Run-time group 1
2: Run-time group 2
3: Run-time group 3
4: Run-time group 4
5: Run-time group 5
6: Run-time group 6
7: Run-time group 7
8: Run-time group 8
9: Run-time group 9
9999: Do not calculate

p20033 AND 0 run sequence / AND 0 RunSeq

SERVO_S110-DP (FBLOCKS), SERVO_S110-CAN (FBLOCKS), SERVO_S110-PN (FBLOCKS)

Can be changed: T	**Calculated:** -	**Access level:** 1
Data type: Unsigned16	**Dyn. index:** -	**Func. diagram:** 7210
P-Group: -	**Unit group:** -	**Unit selection:** -
Not for motor type: -	**Scaling:** -	**Expert list:** 1
Min	**Max**	**Factory setting**
0	32000	10

Description: Setting parameter for the run sequence of instance AND 0 within the run-time group set in p20032.

Note: The function blocks with a lower run sequence value are calculated before function blocks with a higher run sequence value.

p20034[0...3] BI: AND 1 inputs / AND 1 inputs

SERVO_S110-DP (FBLOCKS), SERVO_S110-CAN (FBLOCKS), SERVO_S110-PN (FBLOCKS)

Can be changed: T	**Calculated:** -	**Access level:** 1
Data type: Unsigned32 / Binary	**Dyn. index:** -	**Func. diagram:** 7210
P-Group: -	**Unit group:** -	**Unit selection:** -
Not for motor type: -	**Scaling:** -	**Expert list:** 1
Min	**Max**	**Factory setting**
-	-	0

Description: Sets the signal source of input quantities I0, I1, I2, I3 of instance AND 1 of the AND function block.

Index:
[0] = Input I0
[1] = Input I1
[2] = Input I2
[3] = Input I3

r20035 BO: AND 1 output Q / AND 1 output Q

SERVO_S110-DP (FBLOCKS), SERVO_S110-CAN (FBLOCKS), SERVO_S110-PN (FBLOCKS)

Can be changed: -	**Calculated:** -	**Access level:** 1
Data type: Unsigned32	**Dyn. index:** -	**Func. diagram:** 7210
P-Group: -	**Unit group:** -	**Unit selection:** -
Not for motor type: -	**Scaling:** -	**Expert list:** 1
Min	**Max**	**Factory setting**
-	-	-

Description: Display parameter for binary quantity Q = I0 & I1 & I2 & I3 of instance AND 1 of the AND function block.

p20036 AND 1 run-time group / AND 1 RTG

SERVO_S110-DP (FBLOCKS), SERVO_S110-CAN (FBLOCKS), SERVO_S110-PN (FBLOCKS)

Can be changed: T	**Calculated:** -	**Access level:** 1
Data type: Integer16	**Dyn. index:** -	**Func. diagram:** 7210
P-Group: -	**Unit group:** -	**Unit selection:** -
Not for motor type: -	**Scaling:** -	**Expert list:** 1
Min	**Max**	**Factory setting**
0	9999	9999

Description: Setting parameter for the run-time group in which the instance AND 1 of the AND function block is to be called.

Value:
0: Run-time group 0
1: Run-time group 1
2: Run-time group 2
3: Run-time group 3
4: Run-time group 4
5: Run-time group 5
6: Run-time group 6
7: Run-time group 7
8: Run-time group 8
9: Run-time group 9
9999: Do not calculate

p20037 AND 1 run sequence / AND 1 RunSeq

SERVO_S110-DP (FBLOCKS), SERVO_S110-CAN (FBLOCKS), SERVO_S110-PN (FBLOCKS)

Can be changed: T	**Calculated:** -	**Access level:** 1
Data type: Unsigned16	**Dyn. index:** -	**Func. diagram:** 7210
P-Group: -	**Unit group:** -	**Unit selection:** -
Not for motor type: -	**Scaling:** -	**Expert list:** 1
Min	**Max**	**Factory setting**
0	32000	20

Description: Setting parameter for the run sequence of instance AND 1 within the run-time group set in p20036.

Note: The function blocks with a lower run sequence value are calculated before function blocks with a higher run sequence value.

p20038[0...3] BI: AND 2 inputs / AND 2 inputs

SERVO_S110-DP (FBLOCKS), SERVO_S110-CAN (FBLOCKS), SERVO_S110-PN (FBLOCKS)

Can be changed: T	**Calculated:** -	**Access level:** 1
Data type: Unsigned32 / Binary	**Dyn. index:** -	**Func. diagram:** 7210
P-Group: -	**Unit group:** -	**Unit selection:** -
Not for motor type: -	**Scaling:** -	**Expert list:** 1
Min	**Max**	**Factory setting**
-	-	0

Description: Sets the signal source of input quantities I0, I1, I2, I3 of instance AND 2 of the AND function block.

Index:
[0] = Input I0
[1] = Input I1
[2] = Input I2
[3] = Input I3

r20039 BO: AND 2 output Q / AND 2 output Q

SERVO_S110-DP (FBLOCKS), SERVO_S110-CAN (FBLOCKS), SERVO_S110-PN (FBLOCKS)

Can be changed: -	**Calculated:** -	**Access level:** 1
Data type: Unsigned32	**Dyn. index:** -	**Func. diagram:** 7210
P-Group: -	**Unit group:** -	**Unit selection:** -
Not for motor type: -	**Scaling:** -	**Expert list:** 1
Min	**Max**	**Factory setting**
-	-	-

Description: Display parameter for binary quantity Q = I0 & I1 & I2 & I3 of instance AND 2 of the AND function block.

p20040 AND 2 run-time group / AND 2 RTG

SERVO_S110-DP (FBLOCKS), SERVO_S110-CAN (FBLOCKS), SERVO_S110-PN (FBLOCKS)

Can be changed: T	**Calculated:** -	**Access level:** 1
Data type: Integer16	**Dyn. index:** -	**Func. diagram:** 7210
P-Group: -	**Unit group:** -	**Unit selection:** -
Not for motor type: -	**Scaling:** -	**Expert list:** 1
Min	**Max**	**Factory setting**
0	9999	9999

Description: Setting parameter for the run-time group in which the instance AND 2 of the AND function block is to be called.

Value:
0: Run-time group 0
1: Run-time group 1
2: Run-time group 2
3: Run-time group 3
4: Run-time group 4
5: Run-time group 5
6: Run-time group 6
7: Run-time group 7
8: Run-time group 8
9: Run-time group 9
9999: Do not calculate

p20041 AND 2 run sequence / AND 2 RunSeq

SERVO_S110-DP (FBLOCKS), SERVO_S110-CAN (FBLOCKS), SERVO_S110-PN (FBLOCKS)

Can be changed: T	**Calculated:** -	**Access level:** 1
Data type: Unsigned16	**Dyn. index:** -	**Func. diagram:** 7210
P-Group: -	**Unit group:** -	**Unit selection:** -
Not for motor type: -	**Scaling:** -	**Expert list:** 1
Min	**Max**	**Factory setting**
0	32000	30

Description: Setting parameter for the run sequence of instance AND 2 within the run-time group set in p20040.

Note: The function blocks with a lower run sequence value are calculated before function blocks with a higher run sequence value.

p20042[0...3] BI: AND 3 inputs / AND 3 inputs

SERVO_S110-DP (FBLOCKS), SERVO_S110-CAN (FBLOCKS), SERVO_S110-PN (FBLOCKS)

Can be changed: T	**Calculated:** -	**Access level:** 1
Data type: Unsigned32 / Binary	**Dyn. index:** -	**Func. diagram:** 7210
P-Group: -	**Unit group:** -	**Unit selection:** -
Not for motor type: -	**Scaling:** -	**Expert list:** 1
Min	**Max**	**Factory setting**
-	-	0

Description: Sets the signal source of input quantities I0, I1, I2, I3 of instance AND 3 of the AND function block.

Index:
[0] = Input I0
[1] = Input I1
[2] = Input I2
[3] = Input I3

r20043 BO: AND 3 output Q / AND 3 output Q

SERVO_S110-DP (FBLOCKS), SERVO_S110-CAN (FBLOCKS), SERVO_S110-PN (FBLOCKS)

Can be changed: -	**Calculated:** -	**Access level:** 1
Data type: Unsigned32	**Dyn. index:** -	**Func. diagram:** 7210
P-Group: -	**Unit group:** -	**Unit selection:** -
Not for motor type: -	**Scaling:** -	**Expert list:** 1
Min	**Max**	**Factory setting**
-	-	-

Description: Display parameter for binary quantity Q = I0 & I1 & I2 & I3 of instance AND 3 of the AND function block.

p20044 AND 3 run-time group / AND 3 RTG

SERVO_S110-DP (FBLOCKS), SERVO_S110-CAN (FBLOCKS), SERVO_S110-PN (FBLOCKS)

Can be changed: T	**Calculated:** -	**Access level:** 1
Data type: Integer16	**Dyn. index:** -	**Func. diagram:** 7210
P-Group: -	**Unit group:** -	**Unit selection:** -
Not for motor type: -	**Scaling:** -	**Expert list:** 1
Min	**Max**	**Factory setting**
0	9999	9999

Description: Setting parameter for the run-time group in which the instance AND 3 of the AND function block is to be called.

Value:
0: Run-time group 0
1: Run-time group 1
2: Run-time group 2
3: Run-time group 3
4: Run-time group 4
5: Run-time group 5
6: Run-time group 6
7: Run-time group 7
8: Run-time group 8
9: Run-time group 9
9999: Do not calculate

p20045 AND 3 run sequence / AND 3 RunSeq

SERVO_S110-DP (FBLOCKS), SERVO_S110-CAN (FBLOCKS), SERVO_S110-PN (FBLOCKS)

Can be changed: T	**Calculated:** -	**Access level:** 1
Data type: Unsigned16	**Dyn. index:** -	**Func. diagram:** 7210
P-Group: -	**Unit group:** -	**Unit selection:** -
Not for motor type: -	**Scaling:** -	**Expert list:** 1
Min	**Max**	**Factory setting**
0	32000	40

Description: Setting parameter for the run sequence of instance AND 3 within the run-time group set in p20044.

Note: The function blocks with a lower run sequence value are calculated before function blocks with a higher run sequence value.

p20046[0...3] BI: OR 0 inputs / OR 0 inputs

SERVO_S110-DP (FBLOCKS), SERVO_S110-CAN (FBLOCKS), SERVO_S110-PN (FBLOCKS)

Can be changed: T	**Calculated:** -	**Access level:** 1
Data type: Unsigned32 / Binary	**Dyn. index:** -	**Func. diagram:** 7212
P-Group: -	**Unit group:** -	**Unit selection:** -
Not for motor type: -	**Scaling:** -	**Expert list:** 1
Min	**Max**	**Factory setting**
-	-	0

Description: Sets the signal source of input quantities I0, I1, I2, I3 of instance OR 0 of the OR function block.

Index:
[0] = Input I0
[1] = Input I1
[2] = Input I2
[3] = Input I3

r20047 BO: OR 0 output Q / OR 0 output Q

SERVO_S110-DP (FBLOCKS), SERVO_S110-CAN (FBLOCKS), SERVO_S110-PN (FBLOCKS)

Can be changed: -	**Calculated:** -	**Access level:** 1
Data type: Unsigned32	**Dyn. index:** -	**Func. diagram:** 7212
P-Group: -	**Unit group:** -	**Unit selection:** -
Not for motor type: -	**Scaling:** -	**Expert list:** 1
Min	**Max**	**Factory setting**
-	-	-

Description: Display parameter for binary quantity Q = I0 | I1 | I2 | I3 of instance OR 0 of the OR function block.

p20048 OR 0 run-time group / OR 0 RTG

SERVO_S110-DP (FBLOCKS), SERVO_S110-CAN (FBLOCKS), SERVO_S110-PN (FBLOCKS)

Can be changed: T	**Calculated:** -	**Access level:** 1
Data type: Integer16	**Dyn. index:** -	**Func. diagram:** 7212
P-Group: -	**Unit group:** -	**Unit selection:** -
Not for motor type: -	**Scaling:** -	**Expert list:** 1
Min	**Max**	**Factory setting**
0	9999	9999

Description: Setting parameter for the run-time group in which the instance OR 0 of the OR function block is to be called.

Value:
0: Run-time group 0
1: Run-time group 1
2: Run-time group 2
3: Run-time group 3
4: Run-time group 4
5: Run-time group 5
6: Run-time group 6
7: Run-time group 7
8: Run-time group 8
9: Run-time group 9
9999: Do not calculate

p20049 OR 0 run sequence / OR 0 RunSeq

SERVO_S110-DP (FBLOCKS), SERVO_S110-CAN (FBLOCKS), SERVO_S110-PN (FBLOCKS)

Can be changed: T	**Calculated:** -	**Access level:** 1
Data type: Unsigned16	**Dyn. index:** -	**Func. diagram:** 7212
P-Group: -	**Unit group:** -	**Unit selection:** -
Not for motor type: -	**Scaling:** -	**Expert list:** 1
Min	**Max**	**Factory setting**
0	32000	60

Description: Setting parameter for the run sequence of instance OR 0 within the run-time group set in p20048.

Note: The function blocks with a lower run sequence value are calculated before function blocks with a higher run sequence value.

p20050[0...3] BI: OR 1 inputs / OR 1 inputs

SERVO_S110-DP (FBLOCKS), SERVO_S110-CAN (FBLOCKS), SERVO_S110-PN (FBLOCKS)

Can be changed: T	**Calculated:** -	**Access level:** 1
Data type: Unsigned32 / Binary	**Dyn. index:** -	**Func. diagram:** 7212
P-Group: -	**Unit group:** -	**Unit selection:** -
Not for motor type: -	**Scaling:** -	**Expert list:** 1
Min	**Max**	**Factory setting**
-	-	0

Description: Sets the signal source of input quantities I0, I1, I2, I3 of instance OR 1 of the OR function block.

Index:
[0] = Input I0
[1] = Input I1
[2] = Input I2
[3] = Input I3

r20051 BO: OR 1 output Q / OR 1 output Q

SERVO_S110-DP (FBLOCKS), SERVO_S110-CAN (FBLOCKS), SERVO_S110-PN (FBLOCKS)

Can be changed: -	**Calculated:** -	**Access level:** 1
Data type: Unsigned32	**Dyn. index:** -	**Func. diagram:** 7212
P-Group: -	**Unit group:** -	**Unit selection:** -
Not for motor type: -	**Scaling:** -	**Expert list:** 1
Min	**Max**	**Factory setting**
-	-	-

Description: Display parameter for binary quantity Q = I0 | I1 | I2 | I3 of instance OR 1 of the OR function block.

p20052 OR 1 run-time group / OR 1 RTG

SERVO_S110-DP (FBLOCKS), SERVO_S110-CAN (FBLOCKS), SERVO_S110-PN (FBLOCKS)

Can be changed: T	**Calculated:** -	**Access level:** 1
Data type: Integer16	**Dyn. index:** -	**Func. diagram:** 7212
P-Group: -	**Unit group:** -	**Unit selection:** -
Not for motor type: -	**Scaling:** -	**Expert list:** 1
Min	**Max**	**Factory setting**
0	9999	9999

Description: Setting parameter for the run-time group in which the instance OR 1 of the OR function block is to be called.

Value:
0: Run-time group 0
1: Run-time group 1
2: Run-time group 2
3: Run-time group 3
4: Run-time group 4
5: Run-time group 5
6: Run-time group 6
7: Run-time group 7
8: Run-time group 8
9: Run-time group 9
9999: Do not calculate

p20053 OR 1 run sequence / OR 1 RunSeq

SERVO_S110-DP (FBLOCKS), SERVO_S110-CAN (FBLOCKS), SERVO_S110-PN (FBLOCKS)

Can be changed: T	**Calculated:** -	**Access level:** 1
Data type: Unsigned16	**Dyn. index:** -	**Func. diagram:** 7212
P-Group: -	**Unit group:** -	**Unit selection:** -
Not for motor type: -	**Scaling:** -	**Expert list:** 1
Min	**Max**	**Factory setting**
0	32000	70

Description: Setting parameter for the run sequence of instance OR 1 within the run-time group set in p20052.

Note: The function blocks with a lower run sequence value are calculated before function blocks with a higher run sequence value.

p20054[0...3] BI: OR 2 inputs / OR 2 inputs

SERVO_S110-DP (FBLOCKS), SERVO_S110-CAN (FBLOCKS), SERVO_S110-PN (FBLOCKS)

Can be changed: T	**Calculated:** -	**Access level:** 1
Data type: Unsigned32 / Binary	**Dyn. index:** -	**Func. diagram:** 7212
P-Group: -	**Unit group:** -	**Unit selection:** -
Not for motor type: -	**Scaling:** -	**Expert list:** 1
Min	**Max**	**Factory setting**
-	-	0

Description: Sets the signal source of input quantities I0, I1, I2, I3 of instance OR 2 of the OR function block.

Index:
[0] = Input I0
[1] = Input I1
[2] = Input I2
[3] = Input I3

r20055 BO: OR 2 output Q / OR 2 output Q

SERVO_S110-DP (FBLOCKS), SERVO_S110-CAN (FBLOCKS), SERVO_S110-PN (FBLOCKS)

Can be changed: -	**Calculated:** -	**Access level:** 1
Data type: Unsigned32	**Dyn. index:** -	**Func. diagram:** 7212
P-Group: -	**Unit group:** -	**Unit selection:** -
Not for motor type: -	**Scaling:** -	**Expert list:** 1
Min	**Max**	**Factory setting**
-	-	-

Description: Display parameter for binary quantity Q = I0 | I1 | I2 | I3 of instance OR 2 of the OR function block.

p20056 OR 2 run-time group / OR 2 RTG

SERVO_S110-DP (FBLOCKS), SERVO_S110-CAN (FBLOCKS), SERVO_S110-PN (FBLOCKS)

Can be changed: T	**Calculated:** -	**Access level:** 1
Data type: Integer16	**Dyn. index:** -	**Func. diagram:** 7212
P-Group: -	**Unit group:** -	**Unit selection:** -
Not for motor type: -	**Scaling:** -	**Expert list:** 1
Min	**Max**	**Factory setting**
0	9999	9999

Description: Setting parameter for the run-time group in which the instance OR 2 of the OR function block is to be called.

Value:
0: Run-time group 0
1: Run-time group 1
2: Run-time group 2
3: Run-time group 3
4: Run-time group 4
5: Run-time group 5
6: Run-time group 6
7: Run-time group 7
8: Run-time group 8
9: Run-time group 9
9999: Do not calculate

p20057 OR 2 run sequence / OR 2 RunSeq

SERVO_S110-DP (FBLOCKS), SERVO_S110-CAN (FBLOCKS), SERVO_S110-PN (FBLOCKS)

Can be changed: T	**Calculated:** -	**Access level:** 1
Data type: Unsigned16	**Dyn. index:** -	**Func. diagram:** 7212
P-Group: -	**Unit group:** -	**Unit selection:** -
Not for motor type: -	**Scaling:** -	**Expert list:** 1
Min	**Max**	**Factory setting**
0	32000	80

Description: Setting parameter for the run sequence of instance OR 2 within the run-time group set in p20056.

Note: The function blocks with a lower run sequence value are calculated before function blocks with a higher run sequence value.

p20058[0...3] BI: OR 3 inputs / OR 3 inputs

SERVO_S110-DP (FBLOCKS), SERVO_S110-CAN (FBLOCKS), SERVO_S110-PN (FBLOCKS)

Can be changed: T	**Calculated:** -	**Access level:** 1
Data type: Unsigned32 / Binary	**Dyn. index:** -	**Func. diagram:** 7212
P-Group: -	**Unit group:** -	**Unit selection:** -
Not for motor type: -	**Scaling:** -	**Expert list:** 1
Min	**Max**	**Factory setting**
-	-	0

Description: Sets the signal source of input quantities I0, I1, I2, I3 of instance OR 3 of the OR function block.

Index:
[0] = Input I0
[1] = Input I1
[2] = Input I2
[3] = Input I3

r20059 BO: OR 3 output Q / OR 3 output Q

SERVO_S110-DP (FBLOCKS), SERVO_S110-CAN (FBLOCKS), SERVO_S110-PN (FBLOCKS)

Can be changed: -	**Calculated:** -	**Access level:** 1
Data type: Unsigned32	**Dyn. index:** -	**Func. diagram:** 7212
P-Group: -	**Unit group:** -	**Unit selection:** -
Not for motor type: -	**Scaling:** -	**Expert list:** 1
Min	**Max**	**Factory setting**
-	-	-

Description: Display parameter for binary quantity Q = I0 | I1 | I2 | I3 of instance OR 3 of the OR function block.

p20060 OR 3 run-time group / OR 3 RTG

SERVO_S110-DP (FBLOCKS), SERVO_S110-CAN (FBLOCKS), SERVO_S110-PN (FBLOCKS)

Can be changed: T	**Calculated:** -	**Access level:** 1
Data type: Integer16	**Dyn. index:** -	**Func. diagram:** 7212
P-Group: -	**Unit group:** -	**Unit selection:** -
Not for motor type: -	**Scaling:** -	**Expert list:** 1
Min	**Max**	**Factory setting**
0	9999	9999

Description: Setting parameter for the run-time group in which the instance OR 3 of the OR function block is to be called.

Value:
0: Run-time group 0
1: Run-time group 1
2: Run-time group 2
3: Run-time group 3
4: Run-time group 4
5: Run-time group 5
6: Run-time group 6
7: Run-time group 7
8: Run-time group 8
9: Run-time group 9
9999: Do not calculate

p20061 OR 3 run sequence / OR 3 RunSeq

SERVO_S110-DP (FBLOCKS), SERVO_S110-CAN (FBLOCKS), SERVO_S110-PN (FBLOCKS)

Can be changed: T	**Calculated:** -	**Access level:** 1
Data type: Unsigned16	**Dyn. index:** -	**Func. diagram:** 7212
P-Group: -	**Unit group:** -	**Unit selection:** -
Not for motor type: -	**Scaling:** -	**Expert list:** 1
Min	**Max**	**Factory setting**
0	32000	90

Description: Setting parameter for the run sequence of instance OR 3 within the run-time group set in p20060.

Note: The function blocks with a lower run sequence value are calculated before function blocks with a higher run sequence value.

p20062[0...3] BI: XOR 0 inputs / XOR 0 inputs

SERVO_S110-DP (FBLOCKS), SERVO_S110-CAN (FBLOCKS), SERVO_S110-PN (FBLOCKS)

Can be changed: T	**Calculated:** -	**Access level:** 1
Data type: Unsigned32 / Binary	**Dyn. index:** -	**Func. diagram:** 7214
P-Group: -	**Unit group:** -	**Unit selection:** -
Not for motor type: -	**Scaling:** -	**Expert list:** 1
Min	**Max**	**Factory setting**
-	-	0

Description: Sets the signal source of input quantities I0, I1, I2, I3 of instance XOR 0 of the XOR function block.

Index:
[0] = Input I0
[1] = Input I1
[2] = Input I2
[3] = Input I3

r20063 BO: XOR 0 output Q / XOR 0 output Q

SERVO_S110-DP (FBLOCKS), SERVO_S110-CAN (FBLOCKS), SERVO_S110-PN (FBLOCKS)

Can be changed: -	**Calculated:** -	**Access level:** 1
Data type: Unsigned32	**Dyn. index:** -	**Func. diagram:** 7214
P-Group: -	**Unit group:** -	**Unit selection:** -
Not for motor type: -	**Scaling:** -	**Expert list:** 1
Min	**Max**	**Factory setting**
-	-	-

Description: Display parameter for binary quantity Q of instance XOR 0 of the XOR function block.

p20064 XOR 0 run-time group / XOR 0 RTG

SERVO_S110-DP (FBLOCKS), SERVO_S110-CAN (FBLOCKS), SERVO_S110-PN (FBLOCKS)

Can be changed: T	**Calculated:** -	**Access level:** 1
Data type: Integer16	**Dyn. index:** -	**Func. diagram:** 7214
P-Group: -	**Unit group:** -	**Unit selection:** -
Not for motor type: -	**Scaling:** -	**Expert list:** 1
Min	**Max**	**Factory setting**
0	9999	9999

Description: Setting parameter for the run-time group in which the instance XOR 0 of the XOR function block is to be called.

Value:
0: Run-time group 0
1: Run-time group 1
2: Run-time group 2
3: Run-time group 3
4: Run-time group 4
5: Run-time group 5
6: Run-time group 6
7: Run-time group 7
8: Run-time group 8
9: Run-time group 9
9999: Do not calculate

p20065 XOR 0 run sequence / XOR 0 RunSeq

SERVO_S110-DP (FBLOCKS), SERVO_S110-CAN (FBLOCKS), SERVO_S110-PN (FBLOCKS)

Can be changed: T	**Calculated:** -	**Access level:** 1
Data type: Unsigned16	**Dyn. index:** -	**Func. diagram:** 7214
P-Group: -	**Unit group:** -	**Unit selection:** -
Not for motor type: -	**Scaling:** -	**Expert list:** 1
Min	**Max**	**Factory setting**
0	32000	110

Description: Setting parameter for the run sequence of instance XOR 0 within the run-time group set in p20064.

Note: The function blocks with a lower run sequence value are calculated before function blocks with a higher run sequence value.

p20066[0...3] BI: XOR 1 inputs / XOR 1 inputs

SERVO_S110-DP (FBLOCKS), SERVO_S110-CAN (FBLOCKS), SERVO_S110-PN (FBLOCKS)

Can be changed: T	**Calculated:** -	**Access level:** 1
Data type: Unsigned32 / Binary	**Dyn. index:** -	**Func. diagram:** 7214
P-Group: -	**Unit group:** -	**Unit selection:** -
Not for motor type: -	**Scaling:** -	**Expert list:** 1
Min	**Max**	**Factory setting**
-	-	0

Description: Sets the signal source of input quantities I0, I1, I2, I3 of instance XOR 1 of the XOR function block.

Index:
[0] = Input I0
[1] = Input I1
[2] = Input I2
[3] = Input I3

r20067 BO: XOR 1 output Q / XOR 1 output Q

SERVO_S110-DP (FBLOCKS), SERVO_S110-CAN (FBLOCKS), SERVO_S110-PN (FBLOCKS)

Can be changed: -	**Calculated:** -	**Access level:** 1
Data type: Unsigned32	**Dyn. index:** -	**Func. diagram:** 7214
P-Group: -	**Unit group:** -	**Unit selection:** -
Not for motor type: -	**Scaling:** -	**Expert list:** 1
Min	**Max**	**Factory setting**
-	-	-

Description: Display parameter for binary quantity Q of instance XOR 1 of the XOR function block.

p20068 XOR 1 run-time group / XOR 1 RTG

SERVO_S110-DP (FBLOCKS), SERVO_S110-CAN (FBLOCKS), SERVO_S110-PN (FBLOCKS)

Can be changed: T	**Calculated:** -	**Access level:** 1
Data type: Integer16	**Dyn. index:** -	**Func. diagram:** 7214
P-Group: -	**Unit group:** -	**Unit selection:** -
Not for motor type: -	**Scaling:** -	**Expert list:** 1
Min	**Max**	**Factory setting**
0	9999	9999

Description: Setting parameter for the run-time group in which the instance XOR 1 of the XOR function block is to be called.

Value:
0: Run-time group 0
1: Run-time group 1
2: Run-time group 2
3: Run-time group 3
4: Run-time group 4
5: Run-time group 5
6: Run-time group 6
7: Run-time group 7
8: Run-time group 8
9: Run-time group 9
9999: Do not calculate

p20069 XOR 1 run sequence / XOR 1 RunSeq

SERVO_S110-DP (FBLOCKS), SERVO_S110-CAN (FBLOCKS), SERVO_S110-PN (FBLOCKS)

Can be changed: T	**Calculated:** -	**Access level:** 1
Data type: Unsigned16	**Dyn. index:** -	**Func. diagram:** 7214
P-Group: -	**Unit group:** -	**Unit selection:** -
Not for motor type: -	**Scaling:** -	**Expert list:** 1
Min	**Max**	**Factory setting**
0	32000	120

Description: Setting parameter for the run sequence of instance XOR 1 within the run-time group set in p20068.

Note: The function blocks with a lower run sequence value are calculated before function blocks with a higher run sequence value.

p20070[0...3] BI: XOR 2 inputs / XOR 2 inputs

SERVO_S110-DP (FBLOCKS), SERVO_S110-CAN (FBLOCKS), SERVO_S110-PN (FBLOCKS)

Can be changed: T	**Calculated:** -	**Access level:** 1
Data type: Unsigned32 / Binary	**Dyn. index:** -	**Func. diagram:** 7214
P-Group: -	**Unit group:** -	**Unit selection:** -
Not for motor type: -	**Scaling:** -	**Expert list:** 1
Min	**Max**	**Factory setting**
-	-	0

Description: Sets the signal source of input quantities I0, I1, I2, I3 of instance XOR 2 of the XOR function block.

Index:
[0] = Input I0
[1] = Input I1
[2] = Input I2
[3] = Input I3

r20071 BO: XOR 2 output Q / XOR 2 output Q

SERVO_S110-DP (FBLOCKS), SERVO_S110-CAN (FBLOCKS), SERVO_S110-PN (FBLOCKS)

Can be changed: -	**Calculated:** -	**Access level:** 1
Data type: Unsigned32	**Dyn. index:** -	**Func. diagram:** 7214
P-Group: -	**Unit group:** -	**Unit selection:** -
Not for motor type: -	**Scaling:** -	**Expert list:** 1
Min	**Max**	**Factory setting**
-	-	-

Description: Display parameter for binary quantity Q of instance XOR 2 of the XOR function block.

p20072 XOR 2 run-time group / XOR 2 RTG

SERVO_S110-DP (FBLOCKS), SERVO_S110-CAN (FBLOCKS), SERVO_S110-PN (FBLOCKS)

Can be changed: T	**Calculated:** -	**Access level:** 1
Data type: Integer16	**Dyn. index:** -	**Func. diagram:** 7214
P-Group: -	**Unit group:** -	**Unit selection:** -
Not for motor type: -	**Scaling:** -	**Expert list:** 1
Min	**Max**	**Factory setting**
0	9999	9999

Description: Setting parameter for the run-time group in which the instance XOR 2 of the XOR function block is to be called.

Value:
0: Run-time group 0
1: Run-time group 1
2: Run-time group 2
3: Run-time group 3
4: Run-time group 4
5: Run-time group 5
6: Run-time group 6
7: Run-time group 7
8: Run-time group 8
9: Run-time group 9
9999: Do not calculate

p20073 XOR 2 run sequence / XOR 2 RunSeq

SERVO_S110-DP (FBLOCKS), SERVO_S110-CAN (FBLOCKS), SERVO_S110-PN (FBLOCKS)

Can be changed: T	**Calculated:** -	**Access level:** 1
Data type: Unsigned16	**Dyn. index:** -	**Func. diagram:** 7214
P-Group: -	**Unit group:** -	**Unit selection:** -
Not for motor type: -	**Scaling:** -	**Expert list:** 1
Min	**Max**	**Factory setting**
0	32000	130

Description: Setting parameter for the run sequence of instance XOR 2 within the run-time group set in p20072.

Note: The function blocks with a lower run sequence value are calculated before function blocks with a higher run sequence value.

p20074[0...3] BI: XOR 3 inputs / XOR 3 inputs

SERVO_S110-DP (FBLOCKS), SERVO_S110-CAN (FBLOCKS), SERVO_S110-PN (FBLOCKS)

Can be changed: T	**Calculated:** -	**Access level:** 1
Data type: Unsigned32 / Binary	**Dyn. index:** -	**Func. diagram:** 7214
P-Group: -	**Unit group:** -	**Unit selection:** -
Not for motor type: -	**Scaling:** -	**Expert list:** 1
Min	**Max**	**Factory setting**
-	-	0

Description: Sets the signal source of input quantities I0, I1, I2, I3 of instance XOR 3 of the XOR function block.

Index:
[0] = Input I0
[1] = Input I1
[2] = Input I2
[3] = Input I3

r20075 BO: XOR 3 output Q / XOR 3 output Q

SERVO_S110-DP (FBLOCKS), SERVO_S110-CAN (FBLOCKS), SERVO_S110-PN (FBLOCKS)

Can be changed: -	**Calculated:** -	**Access level:** 1
Data type: Unsigned32	**Dyn. index:** -	**Func. diagram:** 7214
P-Group: -	**Unit group:** -	**Unit selection:** -
Not for motor type: -	**Scaling:** -	**Expert list:** 1
Min	**Max**	**Factory setting**
-	-	-

Description: Display parameter for binary quantity Q of instance XOR 3 of the XOR function block.

p20076 XOR 3 run-time group / XOR 3 RTG

SERVO_S110-DP (FBLOCKS), SERVO_S110-CAN (FBLOCKS), SERVO_S110-PN (FBLOCKS)

Can be changed: T	**Calculated:** -	**Access level:** 1
Data type: Integer16	**Dyn. index:** -	**Func. diagram:** 7214
P-Group: -	**Unit group:** -	**Unit selection:** -
Not for motor type: -	**Scaling:** -	**Expert list:** 1
Min	**Max**	**Factory setting**
0	9999	9999

Description: Setting parameter for the run-time group in which the instance XOR 3 of the XOR function block is to be called.

Value:
0: Run-time group 0
1: Run-time group 1
2: Run-time group 2
3: Run-time group 3
4: Run-time group 4
5: Run-time group 5
6: Run-time group 6
7: Run-time group 7
8: Run-time group 8
9: Run-time group 9
9999: Do not calculate

p20077 XOR 3 run sequence / XOR 3 RunSeq

SERVO_S110-DP (FBLOCKS), SERVO_S110-CAN (FBLOCKS), SERVO_S110-PN (FBLOCKS)

Can be changed: T	**Calculated:** -	**Access level:** 1
Data type: Unsigned16	**Dyn. index:** -	**Func. diagram:** 7214
P-Group: -	**Unit group:** -	**Unit selection:** -
Not for motor type: -	**Scaling:** -	**Expert list:** 1
Min	**Max**	**Factory setting**
0	32000	140

Description: Setting parameter for the run sequence of instance XOR 3 within the run-time group set in p20076.

Note: The function blocks with a lower run sequence value are calculated before function blocks with a higher run sequence value.

p20078 BI: NOT 0 input I / NOT 0 input I

SERVO_S110-DP (FBLOCKS), SERVO_S110-CAN (FBLOCKS), SERVO_S110-PN (FBLOCKS)

Can be changed: T	**Calculated:** -	**Access level:** 1
Data type: Unsigned32 / Binary	**Dyn. index:** -	**Func. diagram:** 7216
P-Group: -	**Unit group:** -	**Unit selection:** -
Not for motor type: -	**Scaling:** -	**Expert list:** 1
Min	**Max**	**Factory setting**
-	-	0

Description: Sets the signal source of input quantity I of instance NOT 0 of the inverter.

r20079 BO: NOT 0 inverted output / NOT 0 inv output

SERVO_S110-DP (FBLOCKS), SERVO_S110-CAN (FBLOCKS), SERVO_S110-PN (FBLOCKS)

Can be changed: -	**Calculated:** -	**Access level:** 1
Data type: Unsigned32	**Dyn. index:** -	**Func. diagram:** 7216
P-Group: -	**Unit group:** -	**Unit selection:** -
Not for motor type: -	**Scaling:** -	**Expert list:** 1
Min	**Max**	**Factory setting**
-	-	-

Description: Display parameter for the inverted output of instance NOT 0 of the inverter.

p20080 NOT 0 run-time group / NOT 0 RTG

SERVO_S110-DP (FBLOCKS), SERVO_S110-CAN (FBLOCKS), SERVO_S110-PN (FBLOCKS)

Can be changed: T	**Calculated:** -	**Access level:** 1
Data type: Integer16	**Dyn. index:** -	**Func. diagram:** 7216
P-Group: -	**Unit group:** -	**Unit selection:** -
Not for motor type: -	**Scaling:** -	**Expert list:** 1
Min	**Max**	**Factory setting**
0	9999	9999

Description: Setting parameter for the run-time group in which the instance NOT 0 of the inverter is to be called.

Value:
0: Run-time group 0
1: Run-time group 1
2: Run-time group 2
3: Run-time group 3
4: Run-time group 4
5: Run-time group 5
6: Run-time group 6
7: Run-time group 7
8: Run-time group 8
9: Run-time group 9
9999: Do not calculate

p20081 NOT 0 run sequence / NOT 0 RunSeq

SERVO_S110-DP (FBLOCKS), SERVO_S110-CAN (FBLOCKS), SERVO_S110-PN (FBLOCKS)

Can be changed: T	**Calculated:** -	**Access level:** 1
Data type: Unsigned16	**Dyn. index:** -	**Func. diagram:** 7216
P-Group: -	**Unit group:** -	**Unit selection:** -
Not for motor type: -	**Scaling:** -	**Expert list:** 1
Min	**Max**	**Factory setting**
0	32000	160

Description: Setting parameter for the run sequence of instance NOT 0 within the run-time group set in p20080.

Note: The function blocks with a lower run sequence value are calculated before function blocks with a higher run sequence value.

p20082 BI: NOT 1 input I / NOT 1 input I

SERVO_S110-DP (FBLOCKS), SERVO_S110-CAN (FBLOCKS), SERVO_S110-PN (FBLOCKS)

Can be changed: T	**Calculated:** -	**Access level:** 1
Data type: Unsigned32 / Binary	**Dyn. index:** -	**Func. diagram:** 7216
P-Group: -	**Unit group:** -	**Unit selection:** -
Not for motor type: -	**Scaling:** -	**Expert list:** 1
Min	**Max**	**Factory setting**
-	-	0

Description: Sets the signal source of input quantity I of instance NOT 1 of the inverter.

r20083 BO: NOT 1 inverted output / NOT 1 inv output

SERVO_S110-DP (FBLOCKS), SERVO_S110-CAN (FBLOCKS), SERVO_S110-PN (FBLOCKS)

Can be changed: -	**Calculated:** -	**Access level:** 1
Data type: Unsigned32	**Dyn. index:** -	**Func. diagram:** 7216
P-Group: -	**Unit group:** -	**Unit selection:** -
Not for motor type: -	**Scaling:** -	**Expert list:** 1
Min	**Max**	**Factory setting**
-	-	-

Description: Display parameter for the inverted output of instance NOT 1 of the inverter.

p20084 NOT 1 run-time group / NOT 1 RTG

SERVO_S110-DP (FBLOCKS), SERVO_S110-CAN (FBLOCKS), SERVO_S110-PN (FBLOCKS)

Can be changed: T	**Calculated:** -	**Access level:** 1
Data type: Integer16	**Dyn. index:** -	**Func. diagram:** 7216
P-Group: -	**Unit group:** -	**Unit selection:** -
Not for motor type: -	**Scaling:** -	**Expert list:** 1
Min	**Max**	**Factory setting**
0	9999	9999

Description: Setting parameter for the run-time group in which the instance NOT 1 of the inverter is to be called.

Value:
0: Run-time group 0
1: Run-time group 1
2: Run-time group 2
3: Run-time group 3
4: Run-time group 4
5: Run-time group 5
6: Run-time group 6
7: Run-time group 7
8: Run-time group 8
9: Run-time group 9
9999: Do not calculate

p20085 NOT 1 run sequence / NOT 1 RunSeq

SERVO_S110-DP (FBLOCKS), SERVO_S110-CAN (FBLOCKS), SERVO_S110-PN (FBLOCKS)

Can be changed: T	**Calculated:** -	**Access level:** 1
Data type: Unsigned16	**Dyn. index:** -	**Func. diagram:** 7216
P-Group: -	**Unit group:** -	**Unit selection:** -
Not for motor type: -	**Scaling:** -	**Expert list:** 1
Min	**Max**	**Factory setting**
0	32000	170

Description: Setting parameter for the run sequence of instance NOT 1 within the run-time group set in p20084.

Note: The function blocks with a lower run sequence value are calculated before function blocks with a higher run sequence value.

p20086 BI: NOT 2 input I / NOT 2 input I

SERVO_S110-DP (FBLOCKS), SERVO_S110-CAN (FBLOCKS), SERVO_S110-PN (FBLOCKS)

Can be changed: T	**Calculated:** -	**Access level:** 1
Data type: Unsigned32 / Binary	**Dyn. index:** -	**Func. diagram:** 7216
P-Group: -	**Unit group:** -	**Unit selection:** -
Not for motor type: -	**Scaling:** -	**Expert list:** 1
Min	**Max**	**Factory setting**
-	-	0

Description: Sets the signal source of input quantity I of instance NOT 2 of the inverter.

r20087 BO: NOT 2 inverted output / NOT 2 inv output

SERVO_S110-DP (FBLOCKS), SERVO_S110-CAN (FBLOCKS), SERVO_S110-PN (FBLOCKS)

Can be changed: -	**Calculated:** -	**Access level:** 1
Data type: Unsigned32	**Dyn. index:** -	**Func. diagram:** 7216
P-Group: -	**Unit group:** -	**Unit selection:** -
Not for motor type: -	**Scaling:** -	**Expert list:** 1
Min	**Max**	**Factory setting**
-	-	-

Description: Display parameter for the inverted output of instance NOT 2 of the inverter.

p20088 NOT 2 run-time group / NOT 2 RTG

SERVO_S110-DP (FBLOCKS), SERVO_S110-CAN (FBLOCKS), SERVO_S110-PN (FBLOCKS)

Can be changed: T	**Calculated:** -	**Access level:** 1
Data type: Integer16	**Dyn. index:** -	**Func. diagram:** 7216
P-Group: -	**Unit group:** -	**Unit selection:** -
Not for motor type: -	**Scaling:** -	**Expert list:** 1
Min	**Max**	**Factory setting**
0	9999	9999

Description: Setting parameter for the run-time group in which the instance NOT 2 of the inverter is to be called.

Value:
0: Run-time group 0
1: Run-time group 1
2: Run-time group 2
3: Run-time group 3
4: Run-time group 4
5: Run-time group 5
6: Run-time group 6
7: Run-time group 7
8: Run-time group 8
9: Run-time group 9
9999: Do not calculate

p20089 NOT 2 run sequence / NOT 2 RunSeq

SERVO_S110-DP (FBLOCKS), SERVO_S110-CAN (FBLOCKS), SERVO_S110-PN (FBLOCKS)

Can be changed: T	**Calculated:** -	**Access level:** 1
Data type: Unsigned16	**Dyn. index:** -	**Func. diagram:** 7216
P-Group: -	**Unit group:** -	**Unit selection:** -
Not for motor type: -	**Scaling:** -	**Expert list:** 1
Min	**Max**	**Factory setting**
0	32000	180

Description: Setting parameter for the run sequence of instance NOT 2 within the run-time group set in p20088.

Note: The function blocks with a lower run sequence value are calculated before function blocks with a higher run sequence value.

p20090 BI: NOT 3 input I / NOT 3 input I

SERVO_S110-DP (FBLOCKS), SERVO_S110-CAN (FBLOCKS), SERVO_S110-PN (FBLOCKS)

Can be changed: T	**Calculated:** -	**Access level:** 1
Data type: Unsigned32 / Binary	**Dyn. index:** -	**Func. diagram:** 7216
P-Group: -	**Unit group:** -	**Unit selection:** -
Not for motor type: -	**Scaling:** -	**Expert list:** 1
Min	**Max**	**Factory setting**
-	-	0

Description: Sets the signal source of input quantity I of instance NOT 3 of the inverter.

r20091 BO: NOT 3 inverted output / NOT 3 inv output

SERVO_S110-DP (FBLOCKS), SERVO_S110-CAN (FBLOCKS), SERVO_S110-PN (FBLOCKS)

Can be changed: -	**Calculated:** -	**Access level:** 1
Data type: Unsigned32	**Dyn. index:** -	**Func. diagram:** 7216
P-Group: -	**Unit group:** -	**Unit selection:** -
Not for motor type: -	**Scaling:** -	**Expert list:** 1
Min	**Max**	**Factory setting**
-	-	-

Description: Display parameter for the inverted output of instance NOT 3 of the inverter.

p20092 NOT 3 run-time group / NOT 3 RTG

SERVO_S110-DP (FBLOCKS), SERVO_S110-CAN (FBLOCKS), SERVO_S110-PN (FBLOCKS)

Can be changed: T	**Calculated:** -	**Access level:** 1
Data type: Integer16	**Dyn. index:** -	**Func. diagram:** 7216
P-Group: -	**Unit group:** -	**Unit selection:** -
Not for motor type: -	**Scaling:** -	**Expert list:** 1
Min	**Max**	**Factory setting**
0	9999	9999

Description: Setting parameter for the run-time group in which the instance NOT 3 of the inverter is to be called.

Value:
0: Run-time group 0
1: Run-time group 1
2: Run-time group 2
3: Run-time group 3
4: Run-time group 4
5: Run-time group 5
6: Run-time group 6
7: Run-time group 7
8: Run-time group 8
9: Run-time group 9
9999: Do not calculate

p20093 NOT 3 run sequence / NOT 3 RunSeq

SERVO_S110-DP (FBLOCKS), SERVO_S110-CAN (FBLOCKS), SERVO_S110-PN (FBLOCKS)

Can be changed: T	**Calculated:** -	**Access level:** 1
Data type: Unsigned16	**Dyn. index:** -	**Func. diagram:** 7216
P-Group: -	**Unit group:** -	**Unit selection:** -
Not for motor type: -	**Scaling:** -	**Expert list:** 1
Min	**Max**	**Factory setting**
0	32000	190

Description: Setting parameter for the run sequence of instance NOT 3 within the run-time group set in p20092.

Note: The function blocks with a lower run sequence value are calculated before function blocks with a higher run sequence value.

p20094[0...3] CI: ADD 0 inputs / ADD 0 inputs

SERVO_S110-DP (FBLOCKS), SERVO_S110-CAN (FBLOCKS), SERVO_S110-PN (FBLOCKS)

Can be changed: T	**Calculated:** -	**Access level:** 1
Data type: Unsigned32 / FloatingPoint32	**Dyn. index:** -	**Func. diagram:** 7220
P-Group: -	**Unit group:** -	**Unit selection:** -
Not for motor type: -	**Scaling:** PERCENT	**Expert list:** 1
Min	**Max**	**Factory setting**
-	-	0

Description: Sets the signal source of input quantities X0, X1, X2, X3 of instance ADD 0 of the adder.

Index:
[0] = Input X0
[1] = Input X1
[2] = Input X2
[3] = Input X3

r20095 CO: ADD 0 output Y / ADD 0 output Y

SERVO_S110-DP (FBLOCKS), SERVO_S110-CAN (FBLOCKS), SERVO_S110-PN (FBLOCKS)

Can be changed: -	**Calculated:** -	**Access level:** 1
Data type: FloatingPoint32	**Dyn. index:** -	**Func. diagram:** 7220
P-Group: -	**Unit group:** -	**Unit selection:** -
Not for motor type: -	**Scaling:** PERCENT	**Expert list:** 1
Min	**Max**	**Factory setting**
-	-	-

Description: Display parameter for the output quantity Y = X0 + X1 + X2 + X3 of instance ADD 0 of the adder.

p20096 ADD 0 run-time group / ADD 0 RTG

SERVO_S110-DP (FBLOCKS), SERVO_S110-CAN (FBLOCKS), SERVO_S110-PN (FBLOCKS)

Can be changed: T	**Calculated:** -	**Access level:** 1
Data type: Integer16	**Dyn. index:** -	**Func. diagram:** 7220
P-Group: -	**Unit group:** -	**Unit selection:** -
Not for motor type: -	**Scaling:** -	**Expert list:** 1
Min	**Max**	**Factory setting**
0	9999	9999

Description: Setting parameter for the run-time group in which the instance ADD 0 of the adder is to be called.

Value:
0: Run-time group 0
1: Run-time group 1
2: Run-time group 2
3: Run-time group 3
4: Run-time group 4
5: Run-time group 5
6: Run-time group 6
7: Run-time group 7
8: Run-time group 8
9: Run-time group 9
9999: Do not calculate

p20097 ADD 0 run sequence / ADD 0 RunSeq

SERVO_S110-DP (FBLOCKS), SERVO_S110-CAN (FBLOCKS), SERVO_S110-PN (FBLOCKS)

Can be changed: T	**Calculated:** -	**Access level:** 1
Data type: Unsigned16	**Dyn. index:** -	**Func. diagram:** 7220
P-Group: -	**Unit group:** -	**Unit selection:** -
Not for motor type: -	**Scaling:** -	**Expert list:** 1
Min	**Max**	**Factory setting**
0	32000	210

Description: Setting parameter for the run sequence of instance ADD 0 within the run-time group set in p20096.

Note: The function blocks with a lower run sequence value are calculated before function blocks with a higher run sequence value.

p20098[0...3] CI: ADD 1 inputs / ADD 1 inputs

SERVO_S110-DP (FBLOCKS), SERVO_S110-CAN (FBLOCKS), SERVO_S110-PN (FBLOCKS)

Can be changed: T	**Calculated:** -	**Access level:** 1
Data type: Unsigned32 / FloatingPoint32	**Dyn. index:** -	**Func. diagram:** 7220
P-Group: -	**Unit group:** -	**Unit selection:** -
Not for motor type: -	**Scaling:** PERCENT	**Expert list:** 1
Min	**Max**	**Factory setting**
-	-	0

Description: Sets the signal source of input quantities X0, X1, X2, X3 of instance ADD 1 of the adder.

Index:
[0] = Input X0
[1] = Input X1
[2] = Input X2
[3] = Input X3

r20099 CO: ADD 1 output Y / ADD 1 output Y

SERVO_S110-DP (FBLOCKS), SERVO_S110-CAN (FBLOCKS), SERVO_S110-PN (FBLOCKS)

Can be changed: -	**Calculated:** -	**Access level:** 1
Data type: FloatingPoint32	**Dyn. index:** -	**Func. diagram:** 7220
P-Group: -	**Unit group:** -	**Unit selection:** -
Not for motor type: -	**Scaling:** PERCENT	**Expert list:** 1
Min	**Max**	**Factory setting**
-	-	-

Description: Display parameter for the output quantity Y = X0 + X1 + X2 + X3 of instance ADD 1 of the adder.

p20100 ADD 1 run-time group / ADD 1 RTG

SERVO_S110-DP (FBLOCKS), SERVO_S110-CAN (FBLOCKS), SERVO_S110-PN (FBLOCKS)

Can be changed: T	**Calculated:** -	**Access level:** 1
Data type: Integer16	**Dyn. index:** -	**Func. diagram:** 7220
P-Group: -	**Unit group:** -	**Unit selection:** -
Not for motor type: -	**Scaling:** -	**Expert list:** 1
Min	**Max**	**Factory setting**
0	9999	9999

Description: Setting parameter for the run-time group in which the instance ADD 1 of the adder is to be called.

Value:
0: Run-time group 0
1: Run-time group 1
2: Run-time group 2
3: Run-time group 3
4: Run-time group 4
5: Run-time group 5
6: Run-time group 6
7: Run-time group 7
8: Run-time group 8
9: Run-time group 9
9999: Do not calculate

p20101 ADD 1 run sequence / ADD 1 RunSeq

SERVO_S110-DP (FBLOCKS), SERVO_S110-CAN (FBLOCKS), SERVO_S110-PN (FBLOCKS)

Can be changed: T	**Calculated:** -	**Access level:** 1
Data type: Unsigned16	**Dyn. index:** -	**Func. diagram:** 7220
P-Group: -	**Unit group:** -	**Unit selection:** -
Not for motor type: -	**Scaling:** -	**Expert list:** 1
Min	**Max**	**Factory setting**
0	32000	220

Description: Setting parameter for the run sequence of instance ADD 1 within the run-time group set in p20100.

Note: The function blocks with a lower run sequence value are calculated before function blocks with a higher run sequence value.

p20102[0...1] CI: SUB 0 inputs / SUB 0 inputs

SERVO_S110-DP (FBLOCKS), SERVO_S110-CAN (FBLOCKS), SERVO_S110-PN (FBLOCKS)

Can be changed: T	**Calculated:** -	**Access level:** 1
Data type: Unsigned32 / FloatingPoint32	**Dyn. index:** -	**Func. diagram:** 7220
P-Group: -	**Unit group:** -	**Unit selection:** -
Not for motor type: -	**Scaling:** PERCENT	**Expert list:** 1
Min	**Max**	**Factory setting**
-	-	0

Description: Sets the signal source of minuend X1 and subtrahend X2 of instance SUB 0 of the subtractor.

Index: [0] = Minuend X1
[1] = Subtrahend X2

r20103 CO: SUB 0 difference Y / SUB 0 difference Y

SERVO_S110-DP (FBLOCKS), SERVO_S110-CAN (FBLOCKS), SERVO_S110-PN (FBLOCKS)

Can be changed: -	**Calculated:** -	**Access level:** 1
Data type: FloatingPoint32	**Dyn. index:** -	**Func. diagram:** 7220
P-Group: -	**Unit group:** -	**Unit selection:** -
Not for motor type: -	**Scaling:** PERCENT	**Expert list:** 1
Min	**Max**	**Factory setting**
-	-	-

Description: Display parameter for the difference Y = X1 - X2 of instance SUB 0 of the subtractor.

p20104 SUB 0 run-time group / SUB 0 RTG

SERVO_S110-DP (FBLOCKS), SERVO_S110-CAN (FBLOCKS), SERVO_S110-PN (FBLOCKS)

Can be changed: T	**Calculated:** -	**Access level:** 1
Data type: Integer16	**Dyn. index:** -	**Func. diagram:** 7220
P-Group: -	**Unit group:** -	**Unit selection:** -
Not for motor type: -	**Scaling:** -	**Expert list:** 1
Min	**Max**	**Factory setting**
0	9999	9999

Description: Setting parameter for the run-time group in which instance SUB 0 of the subtractor is to be called.

Value:
0: Run-time group 0
1: Run-time group 1
2: Run-time group 2
3: Run-time group 3
4: Run-time group 4
5: Run-time group 5
6: Run-time group 6
7: Run-time group 7
8: Run-time group 8
9: Run-time group 9
9999: Do not calculate

p20105 SUB 0 run sequence / SUB 0 RunSeq

SERVO_S110-DP (FBLOCKS), SERVO_S110-CAN (FBLOCKS), SERVO_S110-PN (FBLOCKS)

Can be changed: T	**Calculated:** -	**Access level:** 1
Data type: Unsigned16	**Dyn. index:** -	**Func. diagram:** 7220
P-Group: -	**Unit group:** -	**Unit selection:** -
Not for motor type: -	**Scaling:** -	**Expert list:** 1
Min	**Max**	**Factory setting**
0	32000	240

Description: Setting parameter for the run sequence of instance SUB 0 within the run-time group set in p20104.

Note: The function blocks with a lower run sequence value are calculated before function blocks with a higher run sequence value.

p20106[0...1] CI: SUB 1 inputs / SUB 1 inputs

SERVO_S110-DP (FBLOCKS), SERVO_S110-CAN (FBLOCKS), SERVO_S110-PN (FBLOCKS)

Can be changed: T	**Calculated:** -	**Access level:** 1
Data type: Unsigned32 / FloatingPoint32	**Dyn. index:** -	**Func. diagram:** 7220
P-Group: -	**Unit group:** -	**Unit selection:** -
Not for motor type: -	**Scaling:** PERCENT	**Expert list:** 1
Min	**Max**	**Factory setting**
-	-	0

Description: Sets the signal source of minuend X1 and subtrahend X2 of instance SUB 1 of the subtractor.

Index: [0] = Minuend X1
[1] = Subtrahend X2

r20107 CO: SUB 1 difference Y / SUB 1 difference Y

SERVO_S110-DP (FBLOCKS), SERVO_S110-CAN (FBLOCKS), SERVO_S110-PN (FBLOCKS)

Can be changed: -	**Calculated:** -	**Access level:** 1
Data type: FloatingPoint32	**Dyn. index:** -	**Func. diagram:** 7220
P-Group: -	**Unit group:** -	**Unit selection:** -
Not for motor type: -	**Scaling:** PERCENT	**Expert list:** 1
Min	**Max**	**Factory setting**
-	-	-

Description: Display parameter for the difference Y = X1 - X2 of instance SUB 1 of the subtractor.

p20108 SUB 1 run-time group / SUB 1 RTG

SERVO_S110-DP (FBLOCKS), SERVO_S110-CAN (FBLOCKS), SERVO_S110-PN (FBLOCKS)

Can be changed: T	**Calculated:** -	**Access level:** 1
Data type: Integer16	**Dyn. index:** -	**Func. diagram:** 7220
P-Group: -	**Unit group:** -	**Unit selection:** -
Not for motor type: -	**Scaling:** -	**Expert list:** 1
Min	**Max**	**Factory setting**
0	9999	9999

Description: Setting parameter for the run-time group in which instance SUB 1 of the subtractor is to be called.

Value:
0: Run-time group 0
1: Run-time group 1
2: Run-time group 2
3: Run-time group 3
4: Run-time group 4
5: Run-time group 5
6: Run-time group 6
7: Run-time group 7
8: Run-time group 8
9: Run-time group 9
9999: Do not calculate

p20109 SUB 1 run sequence / SUB 1 RunSeq

SERVO_S110-DP (FBLOCKS), SERVO_S110-CAN (FBLOCKS), SERVO_S110-PN (FBLOCKS)

Can be changed: T	**Calculated:** -	**Access level:** 1
Data type: Unsigned16	**Dyn. index:** -	**Func. diagram:** 7220
P-Group: -	**Unit group:** -	**Unit selection:** -
Not for motor type: -	**Scaling:** -	**Expert list:** 1
Min	**Max**	**Factory setting**
0	32000	250

Description: Setting parameter for the run sequence of instance SUB 1 within the run-time group set in p20108.

Note: The function blocks with a lower run sequence value are calculated before function blocks with a higher run sequence value.

p20110[0...3] CI: MUL 0 inputs / MUL 0 inputs

SERVO_S110-DP (FBLOCKS), SERVO_S110-CAN (FBLOCKS), SERVO_S110-PN (FBLOCKS)

Can be changed: T	**Calculated:** -	**Access level:** 1
Data type: Unsigned32 / FloatingPoint32	**Dyn. index:** -	**Func. diagram:** 7222
P-Group: -	**Unit group:** -	**Unit selection:** -
Not for motor type: -	**Scaling:** PERCENT	**Expert list:** 1
Min	**Max**	**Factory setting**
-	-	0

Description: Sets the signal source of the factors X0, X1, X2, X3 of instance MUL 0 of the multiplier.

Index:
[0] = Factor X0
[1] = Factor X1
[2] = Factor X2
[3] = Factor X3

r20111 CO: MUL 0 product Y / MUL 0 product Y

SERVO_S110-DP (FBLOCKS), SERVO_S110-CAN (FBLOCKS), SERVO_S110-PN (FBLOCKS)

Can be changed: -	**Calculated:** -	**Access level:** 1
Data type: FloatingPoint32	**Dyn. index:** -	**Func. diagram:** 7222
P-Group: -	**Unit group:** -	**Unit selection:** -
Not for motor type: -	**Scaling:** PERCENT	**Expert list:** 1
Min	**Max**	**Factory setting**
-	-	-

Description: Display parameter for the product Y = X0 * X1 * X2 * X3 of instance MUL 0 of the multiplier.

p20112 MUL 0 run-time group / MUL 0 RTG

SERVO_S110-DP (FBLOCKS), SERVO_S110-CAN (FBLOCKS), SERVO_S110-PN (FBLOCKS)

Can be changed: T	**Calculated:** -	**Access level:** 1
Data type: Integer16	**Dyn. index:** -	**Func. diagram:** 7222
P-Group: -	**Unit group:** -	**Unit selection:** -
Not for motor type: -	**Scaling:** -	**Expert list:** 1
Min	**Max**	**Factory setting**
0	9999	9999

Description: Setting parameter for the run-time group in which instance MUL 0 of the multiplier is to be called.

Value:
0: Run-time group 0
1: Run-time group 1
2: Run-time group 2
3: Run-time group 3
4: Run-time group 4
5: Run-time group 5
6: Run-time group 6
7: Run-time group 7
8: Run-time group 8
9: Run-time group 9
9999: Do not calculate

p20113 MUL 0 run sequence / MUL 0 RunSeq

SERVO_S110-DP (FBLOCKS), SERVO_S110-CAN (FBLOCKS), SERVO_S110-PN (FBLOCKS)

Can be changed: T	**Calculated:** -	**Access level:** 1
Data type: Unsigned16	**Dyn. index:** -	**Func. diagram:** 7222
P-Group: -	**Unit group:** -	**Unit selection:** -
Not for motor type: -	**Scaling:** -	**Expert list:** 1
Min	**Max**	**Factory setting**
0	32000	270

Description: Setting parameter for the run sequence of instance MUL 0 within the run-time group set in p20112.

Note: The function blocks with a lower run sequence value are calculated before function blocks with a higher run sequence value.

p20114[0...3] CI: MUL 1 inputs / MUL 1 inputs

SERVO_S110-DP (FBLOCKS), SERVO_S110-CAN (FBLOCKS), SERVO_S110-PN (FBLOCKS)

Can be changed: T	**Calculated:** -	**Access level:** 1
Data type: Unsigned32 / FloatingPoint32	**Dyn. index:** -	**Func. diagram:** 7222
P-Group: -	**Unit group:** -	**Unit selection:** -
Not for motor type: -	**Scaling:** PERCENT	**Expert list:** 1
Min	**Max**	**Factory setting**
-	-	0

Description: Sets the signal source of the factors X0, X1, X2, X3 of instance MUL 1 of the multiplier.

Index:
[0] = Factor X0
[1] = Factor X1
[2] = Factor X2
[3] = Factor X3

r20115 CO: MUL 1 product Y / MUL 1 product Y

SERVO_S110-DP (FBLOCKS), SERVO_S110-CAN (FBLOCKS), SERVO_S110-PN (FBLOCKS)

Can be changed: -	**Calculated:** -	**Access level:** 1
Data type: FloatingPoint32	**Dyn. index:** -	**Func. diagram:** 7222
P-Group: -	**Unit group:** -	**Unit selection:** -
Not for motor type: -	**Scaling:** PERCENT	**Expert list:** 1
Min	**Max**	**Factory setting**
-	-	-

Description: Display parameter for the product Y = X0 * X1 * X2 * X3 of instance MUL 1 of the multiplier.

p20116 MUL 1 run-time group / MUL 1 RTG

SERVO_S110-DP (FBLOCKS), SERVO_S110-CAN (FBLOCKS), SERVO_S110-PN (FBLOCKS)

Can be changed: T	**Calculated:** -	**Access level:** 1
Data type: Integer16	**Dyn. index:** -	**Func. diagram:** 7222
P-Group: -	**Unit group:** -	**Unit selection:** -
Not for motor type: -	**Scaling:** -	**Expert list:** 1
Min	**Max**	**Factory setting**
0	9999	9999

Description: Setting parameter for the run-time group in which instance MUL 1 of the multiplier is to be called.

Value:
0: Run-time group 0
1: Run-time group 1
2: Run-time group 2
3: Run-time group 3
4: Run-time group 4
5: Run-time group 5
6: Run-time group 6
7: Run-time group 7
8: Run-time group 8
9: Run-time group 9
9999: Do not calculate

p20117 MUL 1 run sequence / MUL 1 RunSeq

SERVO_S110-DP (FBLOCKS), SERVO_S110-CAN (FBLOCKS), SERVO_S110-PN (FBLOCKS)

Can be changed: T	**Calculated:** -	**Access level:** 1
Data type: Unsigned16	**Dyn. index:** -	**Func. diagram:** 7222
P-Group: -	**Unit group:** -	**Unit selection:** -
Not for motor type: -	**Scaling:** -	**Expert list:** 1
Min	**Max**	**Factory setting**
0	32000	280

Description: Setting parameter for the run sequence of instance MUL 1 within the run-time group set in p20116.

Note: The function blocks with a lower run sequence value are calculated before function blocks with a higher run sequence value.

p20118[0...1] CI: DIV 0 inputs / DIV 0 inputs

SERVO_S110-DP (FBLOCKS), SERVO_S110-CAN (FBLOCKS), SERVO_S110-PN (FBLOCKS)

Can be changed: T	**Calculated:** -	**Access level:** 1
Data type: Unsigned32 / FloatingPoint32	**Dyn. index:** -	**Func. diagram:** 7222
P-Group: -	**Unit group:** -	**Unit selection:** -
Not for motor type: -	**Scaling:** PERCENT	**Expert list:** 1
Min	**Max**	**Factory setting**
-	-	0

Description: Sets the signal source of dividend X1 and divisor X2 of instance DIV 0 of the divider.

Index: [0] = Dividend X0
[1] = Divisor X1

r20119[0...2] CO: DIV 0 quotient / DIV 0 quotient

SERVO_S110-DP (FBLOCKS), SERVO_S110-CAN (FBLOCKS), SERVO_S110-PN (FBLOCKS)

Can be changed: -	**Calculated:** -	**Access level:** 1
Data type: FloatingPoint32	**Dyn. index:** -	**Func. diagram:** 7222
P-Group: -	**Unit group:** -	**Unit selection:** -
Not for motor type: -	**Scaling:** PERCENT	**Expert list:** 1
Min	**Max**	**Factory setting**
-	-	-

Description: Display parameter for quotients Y = X1/X2, integer number quotients YIN, and division remainder MOD = (Y - YIN) x X2 of instance DIV 0 of the divider.

Index: [0] = Quotient Y
[1] = Integer number quotient YIN
[2] = Div remainder MOD

r20120 BO: DIV 0 divisor is zero QF / DIV 0 divisor=0 QF

SERVO_S110-DP (FBLOCKS), SERVO_S110-CAN (FBLOCKS), SERVO_S110-PN (FBLOCKS)

Can be changed: -	**Calculated:** -	**Access level:** 1
Data type: Unsigned32	**Dyn. index:** -	**Func. diagram:** 7222
P-Group: -	**Unit group:** -	**Unit selection:** -
Not for motor type: -	**Scaling:** -	**Expert list:** 1
Min	**Max**	**Factory setting**
-	-	-

Description: Display parameter for the signal QF that the divisor X2 of instance DIV 0 of the divider is zero.
X2 = 0.0 => QF = 1

p20121 DIV 0 run-time group / DIV 0 RTG

SERVO_S110-DP (FBLOCKS), SERVO_S110-CAN (FBLOCKS), SERVO_S110-PN (FBLOCKS)

Can be changed: T	**Calculated:** -	**Access level:** 1
Data type: Integer16	**Dyn. index:** -	**Func. diagram:** 7222
P-Group: -	**Unit group:** -	**Unit selection:** -
Not for motor type: -	**Scaling:** -	**Expert list:** 1
Min	**Max**	**Factory setting**
0	9999	9999

Description: Setting parameter for the run-time group in which instance DIV 0 of the divider is to be called.

Value:
0: Run-time group 0
1: Run-time group 1
2: Run-time group 2
3: Run-time group 3
4: Run-time group 4
5: Run-time group 5
6: Run-time group 6
7: Run-time group 7
8: Run-time group 8
9: Run-time group 9
9999: Do not calculate

p20122 DIV 0 run sequence / DIV 0 RunSeq

SERVO_S110-DP (FBLOCKS), SERVO_S110-CAN (FBLOCKS), SERVO_S110-PN (FBLOCKS)

Can be changed: T	**Calculated:** -	**Access level:** 1
Data type: Unsigned16	**Dyn. index:** -	**Func. diagram:** 7222
P-Group: -	**Unit group:** -	**Unit selection:** -
Not for motor type: -	**Scaling:** -	**Expert list:** 1
Min	**Max**	**Factory setting**
0	32000	300

Description: Setting parameter for the run sequence of instance DIV 0 within the run-time group set in p20121.

Note: The function blocks with a lower run sequence value are calculated before function blocks with a higher run sequence value.

p20123[0...1] CI: DIV 1 inputs / DIV 1 inputs

SERVO_S110-DP (FBLOCKS), SERVO_S110-CAN (FBLOCKS), SERVO_S110-PN (FBLOCKS)

Can be changed: T	**Calculated:** -	**Access level:** 1
Data type: Unsigned32 / FloatingPoint32	**Dyn. index:** -	**Func. diagram:** 7222
P-Group: -	**Unit group:** -	**Unit selection:** -
Not for motor type: -	**Scaling:** PERCENT	**Expert list:** 1
Min	**Max**	**Factory setting**
-	-	0

Description: Sets the signal source of dividend X1 and divisor X2 of instance DIV 1 of the divider.

Index: [0] = Dividend X0
[1] = Divisor X1

r20124[0...2] CO: DIV 1 quotient / DIV 1 quotient

SERVO_S110-DP (FBLOCKS), SERVO_S110-CAN (FBLOCKS), SERVO_S110-PN (FBLOCKS)

Can be changed: -	**Calculated:** -	**Access level:** 1
Data type: FloatingPoint32	**Dyn. index:** -	**Func. diagram:** 7222
P-Group: -	**Unit group:** -	**Unit selection:** -
Not for motor type: -	**Scaling:** PERCENT	**Expert list:** 1
Min	**Max**	**Factory setting**
-	-	-

Description: Display parameter for quotients Y = X1/X2, integer number quotients YIN, and division remainder MOD = (Y - YIN) x X2 of instance DIV 1 of the divider.

Index: [0] = Quotient Y
[1] = Integer number quotient YIN
[2] = Div remainder MOD

r20125 BO: DIV 1 divisor is zero QF / DIV 1 divisor=0 QF

SERVO_S110-DP (FBLOCKS), SERVO_S110-CAN (FBLOCKS), SERVO_S110-PN (FBLOCKS)

Can be changed: -	**Calculated:** -	**Access level:** 1
Data type: Unsigned32	**Dyn. index:** -	**Func. diagram:** 7222
P-Group: -	**Unit group:** -	**Unit selection:** -
Not for motor type: -	**Scaling:** -	**Expert list:** 1
Min	**Max**	**Factory setting**
-	-	-

Description: Display parameter for the signal QF that the divisor X2 of instance DIV 1 of the divider is zero.
X2 = 0.0 => QF = 1

p20126 DIV 1 run-time group / DIV 1 RTG

SERVO_S110-DP (FBLOCKS), SERVO_S110-CAN (FBLOCKS), SERVO_S110-PN (FBLOCKS)

Can be changed: T	**Calculated:** -	**Access level:** 1
Data type: Integer16	**Dyn. index:** -	**Func. diagram:** 7222
P-Group: -	**Unit group:** -	**Unit selection:** -
Not for motor type: -	**Scaling:** -	**Expert list:** 1
Min	**Max**	**Factory setting**
0	9999	9999

Description: Setting parameter for the run-time group in which instance DIV 1 of the divider is to be called.

Value:
0: Run-time group 0
1: Run-time group 1
2: Run-time group 2
3: Run-time group 3
4: Run-time group 4
5: Run-time group 5
6: Run-time group 6
7: Run-time group 7
8: Run-time group 8
9: Run-time group 9
9999: Do not calculate

p20127 DIV 1 run sequence / DIV 1 RunSeq

SERVO_S110-DP (FBLOCKS), SERVO_S110-CAN (FBLOCKS), SERVO_S110-PN (FBLOCKS)

Can be changed: T	**Calculated:** -	**Access level:** 1
Data type: Unsigned16	**Dyn. index:** -	**Func. diagram:** 7222
P-Group: -	**Unit group:** -	**Unit selection:** -
Not for motor type: -	**Scaling:** -	**Expert list:** 1
Min	**Max**	**Factory setting**
0	32000	310

Description: Setting parameter for the run sequence of instance DIV 1 within the run-time group set in p20126.

Note: The function blocks with a lower run sequence value are calculated before function blocks with a higher run sequence value.

p20128 CI: AVA 0 input X / AVA 0 input X

SERVO_S110-DP (FBLOCKS), SERVO_S110-CAN (FBLOCKS), SERVO_S110-PN (FBLOCKS)

Can be changed: T	**Calculated:** -	**Access level:** 1
Data type: Unsigned32 / FloatingPoint32	**Dyn. index:** -	**Func. diagram:** 7224
P-Group: -	**Unit group:** -	**Unit selection:** -
Not for motor type: -	**Scaling:** PERCENT	**Expert list:** 1
Min	**Max**	**Factory setting**
-	-	0

Description: Sets the signal source of the input quantity X of instance AVA 0 of the absolute value generator with sign evaluation.

r20129 CO: AVA 0 output Y / AVA 0 output Y

SERVO_S110-DP (FBLOCKS), SERVO_S110-CAN (FBLOCKS), SERVO_S110-PN (FBLOCKS)

Can be changed: -	**Calculated:** -	**Access level:** 1
Data type: FloatingPoint32	**Dyn. index:** -	**Func. diagram:** 7224
P-Group: -	**Unit group:** -	**Unit selection:** -
Not for motor type: -	**Scaling:** PERCENT	**Expert list:** 1
Min	**Max**	**Factory setting**
-	-	-

Description: Display parameter for output quantity Y of instance AVA 0 of the absolute value generator with sign evaluation.

r20130 BO: AVA 0 input negative SN / AVA 0 input neg SN

SERVO_S110-DP (FBLOCKS), SERVO_S110-CAN (FBLOCKS), SERVO_S110-PN (FBLOCKS)

Can be changed: -	**Calculated:** -	**Access level:** 1
Data type: Unsigned32	**Dyn. index:** -	**Func. diagram:** 7224
P-Group: -	**Unit group:** -	**Unit selection:** -
Not for motor type: -	**Scaling:** -	**Expert list:** 1
Min	**Max**	**Factory setting**
-	-	-

Description: Display parameter for signal SN that the input quantity X of instance AVA 0 of the absolute value generator with sign evaluation is negative.
X < 0.0 => SN = 1

p20131 AVA 0 run-time group / AVA 0 RTG

SERVO_S110-DP (FBLOCKS), SERVO_S110-CAN (FBLOCKS), SERVO_S110-PN (FBLOCKS)

Can be changed: T	**Calculated:** -	**Access level:** 1
Data type: Integer16	**Dyn. index:** -	**Func. diagram:** 7224
P-Group: -	**Unit group:** -	**Unit selection:** -
Not for motor type: -	**Scaling:** -	**Expert list:** 1
Min	**Max**	**Factory setting**
0	9999	9999

Description: Setting parameter for the run-time group in which instance AVA 0 of the absolute value generator with sign evaluation is to be called.

Value:
0: Run-time group 0
1: Run-time group 1
2: Run-time group 2
3: Run-time group 3
4: Run-time group 4
5: Run-time group 5
6: Run-time group 6
7: Run-time group 7
8: Run-time group 8
9: Run-time group 9
9999: Do not calculate

p20132 AVA 0 run sequence / AVA 0 RunSeq

SERVO_S110-DP (FBLOCKS), SERVO_S110-CAN (FBLOCKS), SERVO_S110-PN (FBLOCKS)

Can be changed: T	**Calculated:** -	**Access level:** 1
Data type: Unsigned16	**Dyn. index:** -	**Func. diagram:** 7224
P-Group: -	**Unit group:** -	**Unit selection:** -
Not for motor type: -	**Scaling:** -	**Expert list:** 1
Min	**Max**	**Factory setting**
0	32000	340

Description: Setting parameter for the run sequence of instance AVA 0 within the run-time group set in p20131.

Note: The function blocks with a lower run sequence value are calculated before function blocks with a higher run sequence value.

p20133 CI: AVA 1 input X / AVA 1 input X

SERVO_S110-DP (FBLOCKS), SERVO_S110-CAN (FBLOCKS), SERVO_S110-PN (FBLOCKS)

Can be changed: T	**Calculated:** -	**Access level:** 1
Data type: Unsigned32 / FloatingPoint32	**Dyn. index:** -	**Func. diagram:** 7224
P-Group: -	**Unit group:** -	**Unit selection:** -
Not for motor type: -	**Scaling:** PERCENT	**Expert list:** 1
Min	**Max**	**Factory setting**
-	-	0

Description: Sets the signal source of the input quantity X of instance AVA 1 of the absolute value generator with sign evaluation.

r20134 CO: AVA 1 output Y / AVA 1 output Y

SERVO_S110-DP (FBLOCKS), SERVO_S110-CAN (FBLOCKS), SERVO_S110-PN (FBLOCKS)

Can be changed: -	**Calculated:** -	**Access level:** 1
Data type: FloatingPoint32	**Dyn. index:** -	**Func. diagram:** 7224
P-Group: -	**Unit group:** -	**Unit selection:** -
Not for motor type: -	**Scaling:** PERCENT	**Expert list:** 1
Min	**Max**	**Factory setting**
-	-	-

Description: Display parameter for output quantity Y of instance AVA 1 of the absolute value generator with sign evaluation.

r20135 BO: AVA 1 input negative SN / AVA 1 input neg SN

SERVO_S110-DP (FBLOCKS), SERVO_S110-CAN (FBLOCKS), SERVO_S110-PN (FBLOCKS)

Can be changed: -	**Calculated:** -	**Access level:** 1
Data type: Unsigned32	**Dyn. index:** -	**Func. diagram:** 7224
P-Group: -	**Unit group:** -	**Unit selection:** -
Not for motor type: -	**Scaling:** -	**Expert list:** 1
Min	**Max**	**Factory setting**
-	-	-

Description: Display parameter for signal SN that the input quantity X of instance AVA 1 of the absolute value generator with sign evaluation is negative.
X < 0.0 => SN = 1

p20136 AVA 1 run-time group / AVA 1 RTG

SERVO_S110-DP (FBLOCKS), SERVO_S110-CAN (FBLOCKS), SERVO_S110-PN (FBLOCKS)

Can be changed: T	**Calculated:** -	**Access level:** 1
Data type: Integer16	**Dyn. index:** -	**Func. diagram:** 7224
P-Group: -	**Unit group:** -	**Unit selection:** -
Not for motor type: -	**Scaling:** -	**Expert list:** 1
Min	**Max**	**Factory setting**
0	9999	9999

Description: Setting parameter for the run-time group in which instance AVA 1 of the absolute value generator with sign evaluation is to be called.

Value:
0: Run-time group 0
1: Run-time group 1
2: Run-time group 2
3: Run-time group 3
4: Run-time group 4
5: Run-time group 5
6: Run-time group 6
7: Run-time group 7
8: Run-time group 8
9: Run-time group 9
9999: Do not calculate

p20137 AVA 1 run sequence / AVA 1 RunSeq

SERVO_S110-DP (FBLOCKS), SERVO_S110-CAN (FBLOCKS), SERVO_S110-PN (FBLOCKS)

Can be changed: T	**Calculated:** -	**Access level:** 1
Data type: Unsigned16	**Dyn. index:** -	**Func. diagram:** 7224
P-Group: -	**Unit group:** -	**Unit selection:** -
Not for motor type: -	**Scaling:** -	**Expert list:** 1
Min	**Max**	**Factory setting**
0	32000	350

Description: Setting parameter for the run sequence of instance AVA 1 within the run-time group set in p20136.

Note: The function blocks with a lower run sequence value are calculated before function blocks with a higher run sequence value.

p20138 BI: MFP 0 input pulse I / MFP 0 inp_pulse I

SERVO_S110-DP (FBLOCKS), SERVO_S110-CAN (FBLOCKS), SERVO_S110-PN (FBLOCKS)

Can be changed: T	**Calculated:** -	**Access level:** 1
Data type: Unsigned32 / Binary	**Dyn. index:** -	**Func. diagram:** 7230
P-Group: -	**Unit group:** -	**Unit selection:** -
Not for motor type: -	**Scaling:** -	**Expert list:** 1
Min	**Max**	**Factory setting**
-	-	0

Description: Sets the signal source for the input pulse I of instance MFP 0 of the pulse generator.

p20139 MFP 0 pulse duration in ms / MFP 0 pulse_dur ms

SERVO_S110-DP (FBLOCKS), SERVO_S110-CAN (FBLOCKS), SERVO_S110-PN (FBLOCKS)

Can be changed: T	**Calculated:** -	**Access level:** 1
Data type: FloatingPoint32	**Dyn. index:** -	**Func. diagram:** 7230
P-Group: -	**Unit group:** -	**Unit selection:** -
Not for motor type: -	**Scaling:** -	**Expert list:** 1
Min	**Max**	**Factory setting**
0.00	60000.00	0.00

Description: Setting parameter for pulse duration T in milliseconds of instance MFP 0 of the pulse generator.

r20140 BO: MFP 0 output Q / MFP 0 output Q

SERVO_S110-DP (FBLOCKS), SERVO_S110-CAN (FBLOCKS), SERVO_S110-PN (FBLOCKS)

Can be changed: -	**Calculated:** -	**Access level:** 1
Data type: Unsigned32	**Dyn. index:** -	**Func. diagram:** 7230
P-Group: -	**Unit group:** -	**Unit selection:** -
Not for motor type: -	**Scaling:** -	**Expert list:** 1
Min	**Max**	**Factory setting**
-	-	-

Description: Display parameter for output pulse Q of instance MFP 0 of the pulse generator.

p20141 MFP 0 run-time group / MFP 0 RTG

SERVO_S110-DP (FBLOCKS), SERVO_S110-CAN (FBLOCKS), SERVO_S110-PN (FBLOCKS)

Can be changed: T	**Calculated:** -	**Access level:** 1
Data type: Integer16	**Dyn. index:** -	**Func. diagram:** 7230
P-Group: -	**Unit group:** -	**Unit selection:** -
Not for motor type: -	**Scaling:** -	**Expert list:** 1
Min	**Max**	**Factory setting**
0	9999	9999

Description: Setting parameter for the run-time group in which the instance MFP 0 of the pulse generator is to be called.

Value:
0: Run-time group 0
1: Run-time group 1
2: Run-time group 2
3: Run-time group 3
4: Run-time group 4
5: Run-time group 5
6: Run-time group 6
7: Run-time group 7
8: Run-time group 8
9: Run-time group 9
9999: Do not calculate

p20142 MFP 0 run sequence / MFP 0 RunSeq

SERVO_S110-DP (FBLOCKS), SERVO_S110-CAN (FBLOCKS), SERVO_S110-PN (FBLOCKS)

Can be changed: T	**Calculated:** -	**Access level:** 1
Data type: Unsigned16	**Dyn. index:** -	**Func. diagram:** 7230
P-Group: -	**Unit group:** -	**Unit selection:** -
Not for motor type: -	**Scaling:** -	**Expert list:** 1
Min	**Max**	**Factory setting**
0	32000	370

Description: Setting parameter for the run sequence of instance MFP 0 within the run-time group set in p20141.

Note: The function blocks with a lower run sequence value are calculated before function blocks with a higher run sequence value.

p20143 BI: MFP 1 input pulse I / MFP 1 inp_pulse I

SERVO_S110-DP (FBLOCKS), SERVO_S110-CAN (FBLOCKS), SERVO_S110-PN (FBLOCKS)

Can be changed: T	**Calculated:** -	**Access level:** 1
Data type: Unsigned32 / Binary	**Dyn. index:** -	**Func. diagram:** 7230
P-Group: -	**Unit group:** -	**Unit selection:** -
Not for motor type: -	**Scaling:** -	**Expert list:** 1
Min	**Max**	**Factory setting**
-	-	0

Description: Sets the signal source for the input pulse I of instance MFP 1 of the pulse generator.

p20144 MFP 1 pulse duration in ms / MFP 1 pulse_dur ms

SERVO_S110-DP (FBLOCKS), SERVO_S110-CAN (FBLOCKS), SERVO_S110-PN (FBLOCKS)

Can be changed: T	**Calculated:** -	**Access level:** 1
Data type: FloatingPoint32	**Dyn. index:** -	**Func. diagram:** 7230
P-Group: -	**Unit group:** -	**Unit selection:** -
Not for motor type: -	**Scaling:** -	**Expert list:** 1
Min	**Max**	**Factory setting**
0.00	60000.00	0.00

Description: Setting parameter for pulse duration T in milliseconds of instance MFP 1 of the pulse generator.

r20145 BO: MFP 1 output Q / MFP 1 output Q

SERVO_S110-DP (FBLOCKS), SERVO_S110-CAN (FBLOCKS), SERVO_S110-PN (FBLOCKS)

Can be changed: -	**Calculated:** -	**Access level:** 1
Data type: Unsigned32	**Dyn. index:** -	**Func. diagram:** 7230
P-Group: -	**Unit group:** -	**Unit selection:** -
Not for motor type: -	**Scaling:** -	**Expert list:** 1
Min	**Max**	**Factory setting**
-	-	-

Description: Display parameter for output pulse Q of instance MFP 1 of the pulse generator.

p20146 MFP 1 run-time group / MFP 1 RTG

SERVO_S110-DP (FBLOCKS), SERVO_S110-CAN (FBLOCKS), SERVO_S110-PN (FBLOCKS)

Can be changed: T	**Calculated:** -	**Access level:** 1
Data type: Integer16	**Dyn. index:** -	**Func. diagram:** 7230
P-Group: -	**Unit group:** -	**Unit selection:** -
Not for motor type: -	**Scaling:** -	**Expert list:** 1
Min	**Max**	**Factory setting**
0	9999	9999

Description: Setting parameter for the run-time group in which the instance MFP 1 of the pulse generator is to be called.

Value:
0: Run-time group 0
1: Run-time group 1
2: Run-time group 2
3: Run-time group 3
4: Run-time group 4
5: Run-time group 5
6: Run-time group 6
7: Run-time group 7
8: Run-time group 8
9: Run-time group 9
9999: Do not calculate

p20147 MFP 1 run sequence / MFP 1 RunSeq

SERVO_S110-DP (FBLOCKS), SERVO_S110-CAN (FBLOCKS), SERVO_S110-PN (FBLOCKS)

Can be changed: T	**Calculated:** -	**Access level:** 1
Data type: Unsigned16	**Dyn. index:** -	**Func. diagram:** 7230
P-Group: -	**Unit group:** -	**Unit selection:** -
Not for motor type: -	**Scaling:** -	**Expert list:** 1
Min	**Max**	**Factory setting**
0	32000	380

Description: Setting parameter for the run sequence of instance MFP 1 within the run-time group set in p20146.

Note: The function blocks with a lower run sequence value are calculated before function blocks with a higher run sequence value.

p20148 BI: PCL 0 input pulse I / PCL 0 inp_pulse I

SERVO_S110-DP (FBLOCKS), SERVO_S110-CAN (FBLOCKS), SERVO_S110-PN (FBLOCKS)

Can be changed: T	**Calculated:** -	**Access level:** 1
Data type: Unsigned32 / Binary	**Dyn. index:** -	**Func. diagram:** 7230
P-Group: -	**Unit group:** -	**Unit selection:** -
Not for motor type: -	**Scaling:** -	**Expert list:** 1
Min	**Max**	**Factory setting**
-	-	0

Description: Sets the signal source for the input pulse I of instance PCL 0 of the pulse shortener.

p20149 PCL 0 pulse duration in ms / PCL 0 pulse_dur ms

SERVO_S110-DP (FBLOCKS), SERVO_S110-CAN (FBLOCKS), SERVO_S110-PN (FBLOCKS)

Can be changed: T	**Calculated:** -	**Access level:** 1
Data type: FloatingPoint32	**Dyn. index:** -	**Func. diagram:** 7230
P-Group: -	**Unit group:** -	**Unit selection:** -
Not for motor type: -	**Scaling:** -	**Expert list:** 1
Min	**Max**	**Factory setting**
0.00	60000.00	0.00

Description: Setting parameter for pulse duration T in milliseconds of instance PCL 0 of the pulse shortener.

r20150 BO: PCL 0 output Q / PCL 0 output Q

SERVO_S110-DP (FBLOCKS), SERVO_S110-CAN (FBLOCKS), SERVO_S110-PN (FBLOCKS)

Can be changed: -	**Calculated:** -	**Access level:** 1
Data type: Unsigned32	**Dyn. index:** -	**Func. diagram:** 7230
P-Group: -	**Unit group:** -	**Unit selection:** -
Not for motor type: -	**Scaling:** -	**Expert list:** 1
Min	**Max**	**Factory setting**
-	-	-

Description: Display parameter for output pulse Q of instance PCL 0 of the pulse shortener.

p20151 PCL 0 run-time group / PCL 0 RTG

SERVO_S110-DP (FBLOCKS), SERVO_S110-CAN (FBLOCKS), SERVO_S110-PN (FBLOCKS)

Can be changed: T	**Calculated:** -	**Access level:** 1
Data type: Integer16	**Dyn. index:** -	**Func. diagram:** 7230
P-Group: -	**Unit group:** -	**Unit selection:** -
Not for motor type: -	**Scaling:** -	**Expert list:** 1
Min	**Max**	**Factory setting**
0	9999	9999

Description: Setting parameter for the run-time group in which the instance PCL 0 of the pulse shortener is to be called.

Value:
0: Run-time group 0
1: Run-time group 1
2: Run-time group 2
3: Run-time group 3
4: Run-time group 4
5: Run-time group 5
6: Run-time group 6

7: Run-time group 7
8: Run-time group 8
9: Run-time group 9
9999: Do not calculate

p20152 PCL 0 run sequence / PCL 0 RunSeq

SERVO_S110-DP (FBLOCKS), SERVO_S110-CAN (FBLOCKS), SERVO_S110-PN (FBLOCKS)

Can be changed: T	**Calculated:** -	**Access level:** 1
Data type: Unsigned16	**Dyn. index:** -	**Func. diagram:** 7230
P-Group: -	**Unit group:** -	**Unit selection:** -
Not for motor type: -	**Scaling:** -	**Expert list:** 1
Min	**Max**	**Factory setting**
0	32000	400

Description: Setting parameter for the run sequence of instance PCL 0 within the run-time group set in p20151.

Note: The function blocks with a lower run sequence value are calculated before function blocks with a higher run sequence value.

p20153 BI: PCL 1 input pulse I / PCL 1 inp_pulse I

SERVO_S110-DP (FBLOCKS), SERVO_S110-CAN (FBLOCKS), SERVO_S110-PN (FBLOCKS)

Can be changed: T	**Calculated:** -	**Access level:** 1
Data type: Unsigned32 / Binary	**Dyn. index:** -	**Func. diagram:** 7230
P-Group: -	**Unit group:** -	**Unit selection:** -
Not for motor type: -	**Scaling:** -	**Expert list:** 1
Min	**Max**	**Factory setting**
-	-	0

Description: Sets the signal source for the input pulse I of instance PCL 1 of the pulse shortener.

p20154 PCL 1 pulse duration in ms / PCL 1 pulse_dur ms

SERVO_S110-DP (FBLOCKS), SERVO_S110-CAN (FBLOCKS), SERVO_S110-PN (FBLOCKS)

Can be changed: T	**Calculated:** -	**Access level:** 1
Data type: FloatingPoint32	**Dyn. index:** -	**Func. diagram:** 7230
P-Group: -	**Unit group:** -	**Unit selection:** -
Not for motor type: -	**Scaling:** -	**Expert list:** 1
Min	**Max**	**Factory setting**
0.00	60000.00	0.00

Description: Setting parameter for pulse duration T in milliseconds of instance PCL 1 of the pulse shortener.

r20155 BO: PCL 1 output Q / PCL 1 output Q

SERVO_S110-DP (FBLOCKS), SERVO_S110-CAN (FBLOCKS), SERVO_S110-PN (FBLOCKS)

Can be changed: -	**Calculated:** -	**Access level:** 1
Data type: Unsigned32	**Dyn. index:** -	**Func. diagram:** 7230
P-Group: -	**Unit group:** -	**Unit selection:** -
Not for motor type: -	**Scaling:** -	**Expert list:** 1
Min	**Max**	**Factory setting**
-	-	-

Description: Display parameter for output pulse Q of instance PCL 1 of the pulse shortener.

p20156 PCL 1 run-time group / PCL 1 RTG

SERVO_S110-DP (FBLOCKS), SERVO_S110-CAN (FBLOCKS), SERVO_S110-PN (FBLOCKS)

Can be changed: T	**Calculated:** -	**Access level:** 1
Data type: Integer16	**Dyn. index:** -	**Func. diagram:** 7230
P-Group: -	**Unit group:** -	**Unit selection:** -
Not for motor type: -	**Scaling:** -	**Expert list:** 1
Min	**Max**	**Factory setting**
0	9999	9999

Description: Setting parameter for the run-time group in which the instance PCL 1 of the pulse shortener is to be called.

Value:
0: Run-time group 0
1: Run-time group 1
2: Run-time group 2

3: Run-time group 3
4: Run-time group 4
5: Run-time group 5
6: Run-time group 6
7: Run-time group 7
8: Run-time group 8
9: Run-time group 9
9999: Do not calculate

p20157 PCL 1 run sequence / PCL 1 RunSeq

SERVO_S110-DP (FBLOCKS), SERVO_S110-CAN (FBLOCKS), SERVO_S110-PN (FBLOCKS)

Can be changed: T	**Calculated:** -	**Access level:** 1
Data type: Unsigned16	**Dyn. index:** -	**Func. diagram:** 7230
P-Group: -	**Unit group:** -	**Unit selection:** -
Not for motor type: -	**Scaling:** -	**Expert list:** 1
Min	**Max**	**Factory setting**
0	32000	410

Description: Setting parameter for the run sequence of instance PCL 1 within the run-time group set in p20156.

Note: The function blocks with a lower run sequence value are calculated before function blocks with a higher run sequence value.

p20158 BI: PDE 0 input pulse I / PDE 0 inp_pulse I

SERVO_S110-DP (FBLOCKS), SERVO_S110-CAN (FBLOCKS), SERVO_S110-PN (FBLOCKS)

Can be changed: T	**Calculated:** -	**Access level:** 1
Data type: Unsigned32 / Binary	**Dyn. index:** -	**Func. diagram:** 7232
P-Group: -	**Unit group:** -	**Unit selection:** -
Not for motor type: -	**Scaling:** -	**Expert list:** 1
Min	**Max**	**Factory setting**
-	-	0

Description: Sets the signal source for the input pulse I of instance PDE 0 of the closing delay device.

p20159 PDE 0 pulse delay time in ms / PDE 0 t_del ms

SERVO_S110-DP (FBLOCKS), SERVO_S110-CAN (FBLOCKS), SERVO_S110-PN (FBLOCKS)

Can be changed: T	**Calculated:** -	**Access level:** 1
Data type: FloatingPoint32	**Dyn. index:** -	**Func. diagram:** 7232
P-Group: -	**Unit group:** -	**Unit selection:** -
Not for motor type: -	**Scaling:** -	**Expert list:** 1
Min	**Max**	**Factory setting**
0.00	60000.00	0.00

Description: Setting parameter for pulse delay time T in milliseconds of instance PDE 0 of the closing delay device.

r20160 BO: PDE 0 output Q / PDE 0 output Q

SERVO_S110-DP (FBLOCKS), SERVO_S110-CAN (FBLOCKS), SERVO_S110-PN (FBLOCKS)

Can be changed: -	**Calculated:** -	**Access level:** 1
Data type: Unsigned32	**Dyn. index:** -	**Func. diagram:** 7232
P-Group: -	**Unit group:** -	**Unit selection:** -
Not for motor type: -	**Scaling:** -	**Expert list:** 1
Min	**Max**	**Factory setting**
-	-	-

Description: Display parameter for output pulse Q of instance PDE 0 of the closing delay device.

p20161 PDE 0 run-time group / PDE 0 RTG

SERVO_S110-DP (FBLOCKS), SERVO_S110-CAN (FBLOCKS), SERVO_S110-PN (FBLOCKS)

Can be changed: T	**Calculated:** -	**Access level:** 1
Data type: Integer16	**Dyn. index:** -	**Func. diagram:** 7232
P-Group: -	**Unit group:** -	**Unit selection:** -
Not for motor type: -	**Scaling:** -	**Expert list:** 1
Min	**Max**	**Factory setting**
0	9999	9999

Description: Setting parameter for the run-time group in which instance PDE 0 of the closing delay device is to be called.

Value:
0: Run-time group 0
1: Run-time group 1
2: Run-time group 2
3: Run-time group 3
4: Run-time group 4
5: Run-time group 5
6: Run-time group 6
7: Run-time group 7
8: Run-time group 8
9: Run-time group 9
9999: Do not calculate

p20162 PDE 0 run sequence / PDE 0 RunSeq

SERVO_S110-DP (FBLOCKS), SERVO_S110-CAN (FBLOCKS), SERVO_S110-PN (FBLOCKS)

Can be changed: T	**Calculated:** -	**Access level:** 1
Data type: Unsigned16	**Dyn. index:** -	**Func. diagram:** 7232
P-Group: -	**Unit group:** -	**Unit selection:** -
Not for motor type: -	**Scaling:** -	**Expert list:** 1
Min	**Max**	**Factory setting**
0	32000	430

Description: Setting parameter for the run sequence of instance PDE 0 within the run-time group set in p20161.

Note: The function blocks with a lower run sequence value are calculated before function blocks with a higher run sequence value.

p20163 BI: PDE 1 input pulse I / PDE 1 inp_pulse I

SERVO_S110-DP (FBLOCKS), SERVO_S110-CAN (FBLOCKS), SERVO_S110-PN (FBLOCKS)

Can be changed: T	**Calculated:** -	**Access level:** 1
Data type: Unsigned32 / Binary	**Dyn. index:** -	**Func. diagram:** 7232
P-Group: -	**Unit group:** -	**Unit selection:** -
Not for motor type: -	**Scaling:** -	**Expert list:** 1
Min	**Max**	**Factory setting**
-	-	0

Description: Sets the signal source for the input pulse I of instance PDE 1 of the closing delay device.

p20164 PDE 1 pulse delay time in ms / PDE 1 t_del ms

SERVO_S110-DP (FBLOCKS), SERVO_S110-CAN (FBLOCKS), SERVO_S110-PN (FBLOCKS)

Can be changed: T	**Calculated:** -	**Access level:** 1
Data type: FloatingPoint32	**Dyn. index:** -	**Func. diagram:** 7232
P-Group: -	**Unit group:** -	**Unit selection:** -
Not for motor type: -	**Scaling:** -	**Expert list:** 1
Min	**Max**	**Factory setting**
0.00	60000.00	0.00

Description: Setting parameter for pulse delay time T in milliseconds of instance PDE 1 of the closing delay device.

r20165 BO: PDE 1 output Q / PDE 1 output Q

SERVO_S110-DP (FBLOCKS), SERVO_S110-CAN (FBLOCKS), SERVO_S110-PN (FBLOCKS)

Can be changed: -	**Calculated:** -	**Access level:** 1
Data type: Unsigned32	**Dyn. index:** -	**Func. diagram:** 7232
P-Group: -	**Unit group:** -	**Unit selection:** -
Not for motor type: -	**Scaling:** -	**Expert list:** 1
Min	**Max**	**Factory setting**
-	-	-

Description: Display parameter for output pulse Q of instance PDE 1 of the closing delay device.

p20166 PDE 1 run-time group / PDE 1 RTG

SERVO_S110-DP (FBLOCKS), SERVO_S110-CAN (FBLOCKS), SERVO_S110-PN (FBLOCKS)

Can be changed: T	**Calculated:** -	**Access level:** 1
Data type: Integer16	**Dyn. index:** -	**Func. diagram:** 7232
P-Group: -	**Unit group:** -	**Unit selection:** -
Not for motor type: -	**Scaling:** -	**Expert list:** 1
Min	**Max**	**Factory setting**
0	9999	9999

Description: Setting parameter for the run-time group in which instance PDE 1 of the closing delay device is to be called.

Value:
0: Run-time group 0
1: Run-time group 1
2: Run-time group 2
3: Run-time group 3
4: Run-time group 4
5: Run-time group 5
6: Run-time group 6
7: Run-time group 7
8: Run-time group 8
9: Run-time group 9
9999: Do not calculate

p20167 PDE 1 run sequence / PDE 1 RunSeq

SERVO_S110-DP (FBLOCKS), SERVO_S110-CAN (FBLOCKS), SERVO_S110-PN (FBLOCKS)

Can be changed: T	**Calculated:** -	**Access level:** 1
Data type: Unsigned16	**Dyn. index:** -	**Func. diagram:** 7232
P-Group: -	**Unit group:** -	**Unit selection:** -
Not for motor type: -	**Scaling:** -	**Expert list:** 1
Min	**Max**	**Factory setting**
0	32000	440

Description: Setting parameter for the run sequence of instance PDE 1 within the run-time group set in p20166.

Note: The function blocks with a lower run sequence value are calculated before function blocks with a higher run sequence value.

p20168 BI: PDF 0 input pulse I / PDF 0 inp_pulse I

SERVO_S110-DP (FBLOCKS), SERVO_S110-CAN (FBLOCKS), SERVO_S110-PN (FBLOCKS)

Can be changed: T	**Calculated:** -	**Access level:** 1
Data type: Unsigned32 / Binary	**Dyn. index:** -	**Func. diagram:** 7232
P-Group: -	**Unit group:** -	**Unit selection:** -
Not for motor type: -	**Scaling:** -	**Expert list:** 1
Min	**Max**	**Factory setting**
-	-	0

Description: Sets the signal source for the input pulse I of instance PDF 0 of the breaking delay device.

p20169 PDF 0 pulse extension time in ms / PDF 0 t_ext ms

SERVO_S110-DP (FBLOCKS), SERVO_S110-CAN (FBLOCKS), SERVO_S110-PN (FBLOCKS)

Can be changed: T	**Calculated:** -	**Access level:** 1
Data type: FloatingPoint32	**Dyn. index:** -	**Func. diagram:** 7232
P-Group: -	**Unit group:** -	**Unit selection:** -
Not for motor type: -	**Scaling:** -	**Expert list:** 1
Min	**Max**	**Factory setting**
0.00	60000.00	0.00

Description: Setting parameter for pulse extension time T in milliseconds of instance PDF 0 of the breaking delay device.

r20170 BO: PDF 0 output Q / PDF 0 output Q

SERVO_S110-DP (FBLOCKS), SERVO_S110-CAN (FBLOCKS), SERVO_S110-PN (FBLOCKS)

Can be changed: -	**Calculated:** -	**Access level:** 1
Data type: Unsigned32	**Dyn. index:** -	**Func. diagram:** 7232
P-Group: -	**Unit group:** -	**Unit selection:** -
Not for motor type: -	**Scaling:** -	**Expert list:** 1
Min	**Max**	**Factory setting**
-	-	-

Description: Display parameter for output pulse Q of instance PDF 0 of the breaking delay device.

p20171 PDF 0 run-time group / PDF 0 RTG

SERVO_S110-DP (FBLOCKS), SERVO_S110-CAN (FBLOCKS), SERVO_S110-PN (FBLOCKS)

Can be changed: T	**Calculated:** -	**Access level:** 1
Data type: Integer16	**Dyn. index:** -	**Func. diagram:** 7232
P-Group: -	**Unit group:** -	**Unit selection:** -
Not for motor type: -	**Scaling:** -	**Expert list:** 1
Min	**Max**	**Factory setting**
0	9999	9999

Description: Setting parameter for the run-time group in which the instance PDF 0 of the breaking delay device is to be called.

Value:
0: Run-time group 0
1: Run-time group 1
2: Run-time group 2
3: Run-time group 3
4: Run-time group 4
5: Run-time group 5
6: Run-time group 6
7: Run-time group 7
8: Run-time group 8
9: Run-time group 9
9999: Do not calculate

p20172 PDF 0 run sequence / PDF 0 RunSeq

SERVO_S110-DP (FBLOCKS), SERVO_S110-CAN (FBLOCKS), SERVO_S110-PN (FBLOCKS)

Can be changed: T	**Calculated:** -	**Access level:** 1
Data type: Unsigned16	**Dyn. index:** -	**Func. diagram:** 7232
P-Group: -	**Unit group:** -	**Unit selection:** -
Not for motor type: -	**Scaling:** -	**Expert list:** 1
Min	**Max**	**Factory setting**
0	32000	460

Description: Setting parameter for the run sequence of instance PDF 0 within the run-time group set in p20171.

Note: The function blocks with a lower run sequence value are calculated before function blocks with a higher run sequence value.

p20173 BI: PDF 1 input pulse I / PDF 1 inp_pulse I

SERVO_S110-DP (FBLOCKS), SERVO_S110-CAN (FBLOCKS), SERVO_S110-PN (FBLOCKS)

Can be changed: T	**Calculated:** -	**Access level:** 1
Data type: Unsigned32 / Binary	**Dyn. index:** -	**Func. diagram:** 7232
P-Group: -	**Unit group:** -	**Unit selection:** -
Not for motor type: -	**Scaling:** -	**Expert list:** 1
Min	**Max**	**Factory setting**
-	-	0

Description: Sets the signal source for the input pulse I of instance PDF 1 of the breaking delay device.

p20174 PDF 1 pulse extension time in ms / PDF 1 t_ext ms

SERVO_S110-DP (FBLOCKS), SERVO_S110-CAN (FBLOCKS), SERVO_S110-PN (FBLOCKS)

Can be changed: T	**Calculated:** -	**Access level:** 1
Data type: FloatingPoint32	**Dyn. index:** -	**Func. diagram:** 7232
P-Group: -	**Unit group:** -	**Unit selection:** -
Not for motor type: -	**Scaling:** -	**Expert list:** 1
Min	**Max**	**Factory setting**
0.00	60000.00	0.00

Description: Setting parameter for pulse extension time T in milliseconds of instance PDF 1 of the breaking delay device.

r20175 BO: PDF 1 output Q / PDF 1 output Q

SERVO_S110-DP (FBLOCKS), SERVO_S110-CAN (FBLOCKS), SERVO_S110-PN (FBLOCKS)

Can be changed: -	**Calculated:** -	**Access level:** 1
Data type: Unsigned32	**Dyn. index:** -	**Func. diagram:** 7232
P-Group: -	**Unit group:** -	**Unit selection:** -
Not for motor type: -	**Scaling:** -	**Expert list:** 1
Min	**Max**	**Factory setting**
-	-	-

Description: Display parameter for output pulse Q of instance PDF 1 of the breaking delay device.

p20176 PDF 1 run-time group / PDF 1 RTG

SERVO_S110-DP (FBLOCKS), SERVO_S110-CAN (FBLOCKS), SERVO_S110-PN (FBLOCKS)

Can be changed: T	**Calculated:** -	**Access level:** 1
Data type: Integer16	**Dyn. index:** -	**Func. diagram:** 7232
P-Group: -	**Unit group:** -	**Unit selection:** -
Not for motor type: -	**Scaling:** -	**Expert list:** 1
Min	**Max**	**Factory setting**
0	9999	9999

Description: Setting parameter for the run-time group in which the instance PDF 1 of the breaking delay device is to be called.

Value:
0: Run-time group 0
1: Run-time group 1
2: Run-time group 2
3: Run-time group 3
4: Run-time group 4
5: Run-time group 5
6: Run-time group 6
7: Run-time group 7
8: Run-time group 8
9: Run-time group 9
9999: Do not calculate

p20177 PDF 1 run sequence / PDF 1 RunSeq

SERVO_S110-DP (FBLOCKS), SERVO_S110-CAN (FBLOCKS), SERVO_S110-PN (FBLOCKS)

Can be changed: T	**Calculated:** -	**Access level:** 1
Data type: Unsigned16	**Dyn. index:** -	**Func. diagram:** 7232
P-Group: -	**Unit group:** -	**Unit selection:** -
Not for motor type: -	**Scaling:** -	**Expert list:** 1
Min	**Max**	**Factory setting**
0	32000	470

Description: Setting parameter for the run sequence of instance PDF 1 within the run-time group set in p20176.

Note: The function blocks with a lower run sequence value are calculated before function blocks with a higher run sequence value.

p20178[0...1] BI: PST 0 inputs / PST 0 inputs

SERVO_S110-DP (FBLOCKS), SERVO_S110-CAN (FBLOCKS), SERVO_S110-PN (FBLOCKS)

Can be changed: T	**Calculated:** -	**Access level:** 1
Data type: Unsigned32 / Binary	**Dyn. index:** -	**Func. diagram:** 7234
P-Group: -	**Unit group:** -	**Unit selection:** -
Not for motor type: -	**Scaling:** -	**Expert list:** 1
Min	**Max**	**Factory setting**
-	-	0

Description: Sets the signal source for input pulse I and the reset input R of instance PST 0 of the pulse extension element.

Index: [0] = Input pulse I
[1] = Reset input R

p20179 PST 0 pulse duration in ms / PST 0 pulse_dur ms

SERVO_S110-DP (FBLOCKS), SERVO_S110-CAN (FBLOCKS), SERVO_S110-PN (FBLOCKS)

Can be changed: T	**Calculated:** -	**Access level:** 1
Data type: FloatingPoint32	**Dyn. index:** -	**Func. diagram:** 7234
P-Group: -	**Unit group:** -	**Unit selection:** -
Not for motor type: -	**Scaling:** -	**Expert list:** 1
Min	**Max**	**Factory setting**
0.00	60000.00	0.00

Description: Setting parameter for pulse duration T in milliseconds of instance PST 0 of the pulse extension element.

r20180 BO: PST 0 output Q / PST 0 output Q

SERVO_S110-DP (FBLOCKS), SERVO_S110-CAN (FBLOCKS), SERVO_S110-PN (FBLOCKS)

Can be changed: -	**Calculated:** -	**Access level:** 1
Data type: Unsigned32	**Dyn. index:** -	**Func. diagram:** 7234
P-Group: -	**Unit group:** -	**Unit selection:** -
Not for motor type: -	**Scaling:** -	**Expert list:** 1
Min	**Max**	**Factory setting**
-	-	-

Description: Display parameter for output pulse Q of instance PST 0 of the pulse extension element.

p20181 PST 0 run-time group / PST 0 RTG

SERVO_S110-DP (FBLOCKS), SERVO_S110-CAN (FBLOCKS), SERVO_S110-PN (FBLOCKS)

Can be changed: T	**Calculated:** -	**Access level:** 1
Data type: Integer16	**Dyn. index:** -	**Func. diagram:** 7234
P-Group: -	**Unit group:** -	**Unit selection:** -
Not for motor type: -	**Scaling:** -	**Expert list:** 1
Min	**Max**	**Factory setting**
0	9999	9999

Description: Setting parameter for the run-time group in which the instance PST 0 of the pulse extension element is to be called.

Value:
0: Run-time group 0
1: Run-time group 1
2: Run-time group 2
3: Run-time group 3
4: Run-time group 4

5: Run-time group 5
6: Run-time group 6
7: Run-time group 7
8: Run-time group 8
9: Run-time group 9
9999: Do not calculate

p20182 PST 0 run sequence / PST 0 RunSeq

SERVO_S110-DP (FBLOCKS), SERVO_S110-CAN (FBLOCKS), SERVO_S110-PN (FBLOCKS)

Can be changed: T	**Calculated:** -	**Access level:** 1
Data type: Unsigned16	**Dyn. index:** -	**Func. diagram:** 7234
P-Group: -	**Unit group:** -	**Unit selection:** -
Not for motor type: -	**Scaling:** -	**Expert list:** 1
Min	**Max**	**Factory setting**
0	7999	490

Description: Setting parameter for the run sequence of instance PST 0 within the run-time group set in p20181.

Note: The function blocks with a lower run sequence value are calculated before function blocks with a higher run sequence value.

p20183[0...1] BI: PST 1 inputs / PST 1 inputs

SERVO_S110-DP (FBLOCKS), SERVO_S110-CAN (FBLOCKS), SERVO_S110-PN (FBLOCKS)

Can be changed: T	**Calculated:** -	**Access level:** 1
Data type: Unsigned32 / Binary	**Dyn. index:** -	**Func. diagram:** 7234
P-Group: -	**Unit group:** -	**Unit selection:** -
Not for motor type: -	**Scaling:** -	**Expert list:** 1
Min	**Max**	**Factory setting**
-	-	0

Description: Sets the signal source for input pulse I and the reset input R of instance PST 1 of the pulse extension element.

Index: [0] = Input pulse I
[1] = Reset input R

p20184 PST 1 pulse duration in ms / PST 1 pulse_dur ms

SERVO_S110-DP (FBLOCKS), SERVO_S110-CAN (FBLOCKS), SERVO_S110-PN (FBLOCKS)

Can be changed: T	**Calculated:** -	**Access level:** 1
Data type: FloatingPoint32	**Dyn. index:** -	**Func. diagram:** 7234
P-Group: -	**Unit group:** -	**Unit selection:** -
Not for motor type: -	**Scaling:** -	**Expert list:** 1
Min	**Max**	**Factory setting**
0.00	60000.00	0.00

Description: Setting parameter for pulse duration T in milliseconds of instance PST 1 of the pulse extension element.

r20185 BO: PST 1 output Q / PST 1 output Q

SERVO_S110-DP (FBLOCKS), SERVO_S110-CAN (FBLOCKS), SERVO_S110-PN (FBLOCKS)

Can be changed: -	**Calculated:** -	**Access level:** 1
Data type: Unsigned32	**Dyn. index:** -	**Func. diagram:** 7234
P-Group: -	**Unit group:** -	**Unit selection:** -
Not for motor type: -	**Scaling:** -	**Expert list:** 1
Min	**Max**	**Factory setting**
-	-	-

Description: Display parameter for output pulse Q of instance PST 1 of the pulse extension element.

p20186 PST 1 run-time group / PST 1 RTG

SERVO_S110-DP (FBLOCKS), SERVO_S110-CAN (FBLOCKS), SERVO_S110-PN (FBLOCKS)

Can be changed: T	**Calculated:** -	**Access level:** 1
Data type: Integer16	**Dyn. index:** -	**Func. diagram:** 7234
P-Group: -	**Unit group:** -	**Unit selection:** -
Not for motor type: -	**Scaling:** -	**Expert list:** 1
Min	**Max**	**Factory setting**
0	9999	9999

Description: Setting parameter for the run-time group in which the instance PST 1 of the pulse extension element is to be called.

Value:
0: Run-time group 0
1: Run-time group 1
2: Run-time group 2
3: Run-time group 3
4: Run-time group 4
5: Run-time group 5
6: Run-time group 6
7: Run-time group 7
8: Run-time group 8
9: Run-time group 9
9999: Do not calculate

p20187 PST 1 run sequence / PST 1 RunSeq

SERVO_S110-DP (FBLOCKS), SERVO_S110-CAN (FBLOCKS), SERVO_S110-PN (FBLOCKS)

Can be changed: T	**Calculated:** -	**Access level:** 1
Data type: Unsigned16	**Dyn. index:** -	**Func. diagram:** 7234
P-Group: -	**Unit group:** -	**Unit selection:** -
Not for motor type: -	**Scaling:** -	**Expert list:** 1
Min	**Max**	**Factory setting**
0	7999	500

Description: Setting parameter for the run sequence of instance PST 1 within the run-time group set in p20186.

Note: The function blocks with a lower run sequence value are calculated before function blocks with a higher run sequence value.

p20188[0...1] BI: RSR 0 inputs / RSR 0 inputs

SERVO_S110-DP (FBLOCKS), SERVO_S110-CAN (FBLOCKS), SERVO_S110-PN (FBLOCKS)

Can be changed: T	**Calculated:** -	**Access level:** 1
Data type: Unsigned32 / Binary	**Dyn. index:** -	**Func. diagram:** 7240
P-Group: -	**Unit group:** -	**Unit selection:** -
Not for motor type: -	**Scaling:** -	**Expert list:** 1
Min	**Max**	**Factory setting**
-	-	0

Description: Sets the signal source for set input S and reset input R of instance RSR 0 of the RS flipflop.

Index:
[0] = Set S
[1] = Reset R

r20189 BO: RSR 0 output Q / RSR 0 output Q

SERVO_S110-DP (FBLOCKS), SERVO_S110-CAN (FBLOCKS), SERVO_S110-PN (FBLOCKS)

Can be changed: -	**Calculated:** -	**Access level:** 1
Data type: Unsigned32	**Dyn. index:** -	**Func. diagram:** 7240
P-Group: -	**Unit group:** -	**Unit selection:** -
Not for motor type: -	**Scaling:** -	**Expert list:** 1
Min	**Max**	**Factory setting**
-	-	-

Description: Display parameter for output Q of instance RSR 0 of the RS flipflop

r20190 BO: RSR 0 inverted output QN / RSR 0 inv outp QN

SERVO_S110-DP (FBLOCKS), SERVO_S110-CAN (FBLOCKS), SERVO_S110-PN (FBLOCKS)

Can be changed: -	**Calculated:** -	**Access level:** 1
Data type: Unsigned32	**Dyn. index:** -	**Func. diagram:** 7240
P-Group: -	**Unit group:** -	**Unit selection:** -
Not for motor type: -	**Scaling:** -	**Expert list:** 1
Min	**Max**	**Factory setting**
-	-	-

Description: Display parameter for inverted output QN of instance RSR 0 of the RS flipflop.

p20191 RSR 0 run-time group / RSR 0 RTG

SERVO_S110-DP (FBLOCKS), SERVO_S110-CAN (FBLOCKS), SERVO_S110-PN (FBLOCKS)

Can be changed: T	**Calculated:** -	**Access level:** 1
Data type: Integer16	**Dyn. index:** -	**Func. diagram:** 7240
P-Group: -	**Unit group:** -	**Unit selection:** -
Not for motor type: -	**Scaling:** -	**Expert list:** 1
Min	**Max**	**Factory setting**
0	9999	9999

Description: Setting parameter for the run-time group in which instance RSR 0 of the RS flipflop is to be called.

Value:
0: Run-time group 0
1: Run-time group 1
2: Run-time group 2
3: Run-time group 3
4: Run-time group 4
5: Run-time group 5
6: Run-time group 6
7: Run-time group 7
8: Run-time group 8
9: Run-time group 9
9999: Do not calculate

p20192 RSR 0 run sequence / RSR 0 RunSeq

SERVO_S110-DP (FBLOCKS), SERVO_S110-CAN (FBLOCKS), SERVO_S110-PN (FBLOCKS)

Can be changed: T	**Calculated:** -	**Access level:** 1
Data type: Unsigned16	**Dyn. index:** -	**Func. diagram:** 7240
P-Group: -	**Unit group:** -	**Unit selection:** -
Not for motor type: -	**Scaling:** -	**Expert list:** 1
Min	**Max**	**Factory setting**
0	7999	520

Description: Setting parameter for the run sequence of instance RSR 0 within the run-time group set in p20191.

Note: The function blocks with a lower run sequence value are calculated before function blocks with a higher run sequence value.

p20193[0...1] BI: RSR 1 inputs / RSR 1 inputs

SERVO_S110-DP (FBLOCKS), SERVO_S110-CAN (FBLOCKS), SERVO_S110-PN (FBLOCKS)

Can be changed: T	**Calculated:** -	**Access level:** 1
Data type: Unsigned32 / Binary	**Dyn. index:** -	**Func. diagram:** 7240
P-Group: -	**Unit group:** -	**Unit selection:** -
Not for motor type: -	**Scaling:** -	**Expert list:** 1
Min	**Max**	**Factory setting**
-	-	0

Description: Sets the signal source for set input S and reset input R of instance RSR 1 of the RS flipflop.

Index:
[0] = Set S
[1] = Reset R

r20194 BO: RSR 1 output Q / RSR 1 output Q

SERVO_S110-DP (FBLOCKS), SERVO_S110-CAN (FBLOCKS), SERVO_S110-PN (FBLOCKS)

Can be changed: -	**Calculated:** -	**Access level:** 1
Data type: Unsigned32	**Dyn. index:** -	**Func. diagram:** 7240
P-Group: -	**Unit group:** -	**Unit selection:** -
Not for motor type: -	**Scaling:** -	**Expert list:** 1
Min	**Max**	**Factory setting**
-	-	-

Description: Display parameter for output Q of instance RSR 1 of the RS flipflop

r20195 BO: RSR 1 inverted output QN / RSR 1 inv outp QN

SERVO_S110-DP (FBLOCKS), SERVO_S110-CAN (FBLOCKS), SERVO_S110-PN (FBLOCKS)

Can be changed: -	**Calculated:** -	**Access level:** 1
Data type: Unsigned32	**Dyn. index:** -	**Func. diagram:** 7240
P-Group: -	**Unit group:** -	**Unit selection:** -
Not for motor type: -	**Scaling:** -	**Expert list:** 1
Min	**Max**	**Factory setting**
-	-	-

Description: Display parameter for inverted output QN of instance RSR 1 of the RS flipflop.

p20196 RSR 1 run-time group / RSR 1 RTG

SERVO_S110-DP (FBLOCKS), SERVO_S110-CAN (FBLOCKS), SERVO_S110-PN (FBLOCKS)

Can be changed: T	**Calculated:** -	**Access level:** 1
Data type: Integer16	**Dyn. index:** -	**Func. diagram:** 7240
P-Group: -	**Unit group:** -	**Unit selection:** -
Not for motor type: -	**Scaling:** -	**Expert list:** 1
Min	**Max**	**Factory setting**
0	9999	9999

Description: Setting parameter for the run-time group in which instance RSR 1 of the RS flipflop is to be called.

Value:
0: Run-time group 0
1: Run-time group 1
2: Run-time group 2
3: Run-time group 3
4: Run-time group 4
5: Run-time group 5
6: Run-time group 6
7: Run-time group 7
8: Run-time group 8
9: Run-time group 9
9999: Do not calculate

p20197 RSR 1 run sequence / RSR 1 RunSeq

SERVO_S110-DP (FBLOCKS), SERVO_S110-CAN (FBLOCKS), SERVO_S110-PN (FBLOCKS)

Can be changed: T	**Calculated:** -	**Access level:** 1
Data type: Unsigned16	**Dyn. index:** -	**Func. diagram:** 7240
P-Group: -	**Unit group:** -	**Unit selection:** -
Not for motor type: -	**Scaling:** -	**Expert list:** 1
Min	**Max**	**Factory setting**
0	7999	530

Description: Setting parameter for the run sequence of instance RSR 1 within the run-time group set in p20196.

Note: The function blocks with a lower run sequence value are calculated before function blocks with a higher run sequence value.

p20198[0...3] BI: DFR 0 inputs / DFR 0 inputs

SERVO_S110-DP (FBLOCKS), SERVO_S110-CAN (FBLOCKS), SERVO_S110-PN (FBLOCKS)

Can be changed: T	**Calculated:** -	**Access level:** 1
Data type: Unsigned32 / Binary	**Dyn. index:** -	**Func. diagram:** 7240
P-Group: -	**Unit group:** -	**Unit selection:** -
Not for motor type: -	**Scaling:** -	**Expert list:** 1
Min	**Max**	**Factory setting**
-	-	0

Description: Sets the signal source for trigger input I, D input D, set input S, and reset input R of instance DFR 0 of the D flipflop.

Index:
[0] = Trigger input I
[1] = D input D
[2] = Set S
[3] = Reset R

r20199 BO: DFR 0 output Q / DFR 0 output Q

SERVO_S110-DP (FBLOCKS), SERVO_S110-CAN (FBLOCKS), SERVO_S110-PN (FBLOCKS)

Can be changed: -	**Calculated:** -	**Access level:** 1
Data type: Unsigned32	**Dyn. index:** -	**Func. diagram:** 7240
P-Group: -	**Unit group:** -	**Unit selection:** -
Not for motor type: -	**Scaling:** -	**Expert list:** 1
Min	**Max**	**Factory setting**
-	-	-

Description: Display parameter for output Q of instance DFR 0 of the D flipflop.

r20200 BO: DFR 0 inverted output QN / DFR 0 inv outp QN

SERVO_S110-DP (FBLOCKS), SERVO_S110-CAN (FBLOCKS), SERVO_S110-PN (FBLOCKS)

Can be changed: -	**Calculated:** -	**Access level:** 1
Data type: Unsigned32	**Dyn. index:** -	**Func. diagram:** 7240
P-Group: -	**Unit group:** -	**Unit selection:** -
Not for motor type: -	**Scaling:** -	**Expert list:** 1
Min	**Max**	**Factory setting**
-	-	-

Description: Display parameter for the inverted output QN of instance DFR 0 of the D flipflop.

p20201 DFR 0 run-time group / DFR 0 RTG

SERVO_S110-DP (FBLOCKS), SERVO_S110-CAN (FBLOCKS), SERVO_S110-PN (FBLOCKS)

Can be changed: T	**Calculated:** -	**Access level:** 1
Data type: Integer16	**Dyn. index:** -	**Func. diagram:** 7240
P-Group: -	**Unit group:** -	**Unit selection:** -
Not for motor type: -	**Scaling:** -	**Expert list:** 1
Min	**Max**	**Factory setting**
0	9999	9999

Description: Setting parameter for the run-time group in which instance DFR 0 of the D flipflop is to be called.

Value:
0: Run-time group 0
1: Run-time group 1
2: Run-time group 2
3: Run-time group 3
4: Run-time group 4
5: Run-time group 5
6: Run-time group 6
7: Run-time group 7
8: Run-time group 8
9: Run-time group 9
9999: Do not calculate

p20202 DFR 0 run sequence / DFR 0 RunSeq

SERVO_S110-DP (FBLOCKS), SERVO_S110-CAN (FBLOCKS), SERVO_S110-PN (FBLOCKS)

Can be changed: T	**Calculated:** -	**Access level:** 1
Data type: Unsigned16	**Dyn. index:** -	**Func. diagram:** 7240
P-Group: -	**Unit group:** -	**Unit selection:** -
Not for motor type: -	**Scaling:** -	**Expert list:** 1
Min	**Max**	**Factory setting**
0	32000	550

Description: Setting parameter for the run sequence of instance DFR 0 within the run-time group set in p20201.

Note: The function blocks with a lower run sequence value are calculated before function blocks with a higher run sequence value.

p20203[0...3] BI: DFR 1 inputs / DFR 1 inputs

SERVO_S110-DP (FBLOCKS), SERVO_S110-CAN (FBLOCKS), SERVO_S110-PN (FBLOCKS)

Can be changed: T	**Calculated:** -	**Access level:** 1
Data type: Unsigned32 / Binary	**Dyn. index:** -	**Func. diagram:** 7240
P-Group: -	**Unit group:** -	**Unit selection:** -
Not for motor type: -	**Scaling:** -	**Expert list:** 1
Min	**Max**	**Factory setting**
-	-	0

Description: Sets the signal source for trigger input I, D input D, set input S, and reset input R of instance DFR 1 of the D flipflop.

Index: [0] = Trigger input I
[1] = D input D
[2] = Set S
[3] = Reset R

r20204 BO: DFR 1 output Q / DFR 1 output Q

SERVO_S110-DP (FBLOCKS), SERVO_S110-CAN (FBLOCKS), SERVO_S110-PN (FBLOCKS)

Can be changed: -	**Calculated:** -	**Access level:** 1
Data type: Unsigned32	**Dyn. index:** -	**Func. diagram:** 7240
P-Group: -	**Unit group:** -	**Unit selection:** -
Not for motor type: -	**Scaling:** -	**Expert list:** 1
Min	**Max**	**Factory setting**
-	-	-

Description: Display parameter for output Q of instance DFR 1 of the D flipflop.

r20205 BO: DFR 1 inverted output QN / DFR 1 inv outp QN

SERVO_S110-DP (FBLOCKS), SERVO_S110-CAN (FBLOCKS), SERVO_S110-PN (FBLOCKS)

Can be changed: -	**Calculated:** -	**Access level:** 1
Data type: Unsigned32	**Dyn. index:** -	**Func. diagram:** 7240
P-Group: -	**Unit group:** -	**Unit selection:** -
Not for motor type: -	**Scaling:** -	**Expert list:** 1
Min	**Max**	**Factory setting**
-	-	-

Description: Display parameter for the inverted output QN of instance DFR 1 of the D flipflop.

p20206 DFR 1 run-time group / DFR 1 RTG

SERVO_S110-DP (FBLOCKS), SERVO_S110-CAN (FBLOCKS), SERVO_S110-PN (FBLOCKS)

Can be changed: T	**Calculated:** -	**Access level:** 1
Data type: Integer16	**Dyn. index:** -	**Func. diagram:** 7240
P-Group: -	**Unit group:** -	**Unit selection:** -
Not for motor type: -	**Scaling:** -	**Expert list:** 1
Min	**Max**	**Factory setting**
0	9999	9999

Description: Setting parameter for the run-time group in which instance DFR 1 of the D flipflop is to be called.

Value:
0: Run-time group 0
1: Run-time group 1
2: Run-time group 2

3: Run-time group 3
4: Run-time group 4
5: Run-time group 5
6: Run-time group 6
7: Run-time group 7
8: Run-time group 8
9: Run-time group 9
9999: Do not calculate

p20207 DFR 1 run sequence / DFR 1 RunSeq

SERVO_S110-DP (FBLOCKS), SERVO_S110-CAN (FBLOCKS), SERVO_S110-PN (FBLOCKS)

Can be changed: T	**Calculated:** -	**Access level:** 1
Data type: Unsigned16	**Dyn. index:** -	**Func. diagram:** 7240
P-Group: -	**Unit group:** -	**Unit selection:** -
Not for motor type: -	**Scaling:** -	**Expert list:** 1
Min	**Max**	**Factory setting**
0	32000	560

Description: Setting parameter for the run-time group of instance DFR 1 within the run-time group set in p20206.

Note: The function blocks with a lower run sequence value are calculated before function blocks with a higher run sequence value.

p20208[0...1] BI: BSW 0 inputs / BSW 0 inputs

SERVO_S110-DP (FBLOCKS), SERVO_S110-CAN (FBLOCKS), SERVO_S110-PN (FBLOCKS)

Can be changed: T	**Calculated:** -	**Access level:** 1
Data type: Unsigned32 / Binary	**Dyn. index:** -	**Func. diagram:** 7250
P-Group: -	**Unit group:** -	**Unit selection:** -
Not for motor type: -	**Scaling:** -	**Expert list:** 1
Min	**Max**	**Factory setting**
-	-	0

Description: Sets the signal source of input quantities I0 and I1 of instance BSW 0 of the binary changeover switch.

Index: [0] = Input I0
[1] = Input I1

p20209 BI: BSW 0 switch setting I / BSW 0 sw_setting

SERVO_S110-DP (FBLOCKS), SERVO_S110-CAN (FBLOCKS), SERVO_S110-PN (FBLOCKS)

Can be changed: T	**Calculated:** -	**Access level:** 1
Data type: Unsigned32 / Binary	**Dyn. index:** -	**Func. diagram:** 7250
P-Group: -	**Unit group:** -	**Unit selection:** -
Not for motor type: -	**Scaling:** -	**Expert list:** 1
Min	**Max**	**Factory setting**
-	-	0

Description: Sets the signal source of the switch setting I of instance BSW 0 of the binary changeover switch.

r20210 BO: BSW 0 output Q / BSW 0 output Q

SERVO_S110-DP (FBLOCKS), SERVO_S110-CAN (FBLOCKS), SERVO_S110-PN (FBLOCKS)

Can be changed: -	**Calculated:** -	**Access level:** 1
Data type: Unsigned32	**Dyn. index:** -	**Func. diagram:** 7250
P-Group: -	**Unit group:** -	**Unit selection:** -
Not for motor type: -	**Scaling:** -	**Expert list:** 1
Min	**Max**	**Factory setting**
-	-	-

Description: Display parameter for output quantity Q of instance BSW 0 of the binary changeover switch.

p20211 BSW 0 run-time group / BSW 0 RTG

SERVO_S110-DP (FBLOCKS), SERVO_S110-CAN (FBLOCKS), SERVO_S110-PN (FBLOCKS)

Can be changed: T	**Calculated:** -	**Access level:** 1
Data type: Integer16	**Dyn. index:** -	**Func. diagram:** 7250
P-Group: -	**Unit group:** -	**Unit selection:** -
Not for motor type: -	**Scaling:** -	**Expert list:** 1
Min	**Max**	**Factory setting**
0	9999	9999

Description: Setting parameter for the run-time group in which the instance BSW 0 of the binary changeover switch is to be called.

Value:
0: Run-time group 0
1: Run-time group 1
2: Run-time group 2
3: Run-time group 3
4: Run-time group 4
5: Run-time group 5
6: Run-time group 6
7: Run-time group 7
8: Run-time group 8
9: Run-time group 9
9999: Do not calculate

p20212 BSW 0 run sequence / BSW 0 RunSeq

SERVO_S110-DP (FBLOCKS), SERVO_S110-CAN (FBLOCKS), SERVO_S110-PN (FBLOCKS)

Can be changed: T	**Calculated:** -	**Access level:** 1
Data type: Unsigned16	**Dyn. index:** -	**Func. diagram:** 7250
P-Group: -	**Unit group:** -	**Unit selection:** -
Not for motor type: -	**Scaling:** -	**Expert list:** 1
Min	**Max**	**Factory setting**
0	7999	580

Description: Setting parameter for the run sequence of instance BSW 0 within the run-time group set in p20211.

Note: The function blocks with a lower run sequence value are calculated before function blocks with a higher run sequence value.

p20213[0...1] BI: BSW 1 inputs / BSW 1 inputs

SERVO_S110-DP (FBLOCKS), SERVO_S110-CAN (FBLOCKS), SERVO_S110-PN (FBLOCKS)

Can be changed: T	**Calculated:** -	**Access level:** 1
Data type: Unsigned32 / Binary	**Dyn. index:** -	**Func. diagram:** 7250
P-Group: -	**Unit group:** -	**Unit selection:** -
Not for motor type: -	**Scaling:** -	**Expert list:** 1
Min	**Max**	**Factory setting**
-	-	0

Description: Sets the signal source of input quantities I0 and I1 of instance BSW 1 of the binary changeover switch.

Index:
[0] = Input I0
[1] = Input I1

p20214 BI: BSW 1 switch setting I / BSW 1 sw_setting

SERVO_S110-DP (FBLOCKS), SERVO_S110-CAN (FBLOCKS), SERVO_S110-PN (FBLOCKS)

Can be changed: T	**Calculated:** -	**Access level:** 1
Data type: Unsigned32 / Binary	**Dyn. index:** -	**Func. diagram:** 7250
P-Group: -	**Unit group:** -	**Unit selection:** -
Not for motor type: -	**Scaling:** -	**Expert list:** 1
Min	**Max**	**Factory setting**
-	-	0

Description: Sets the signal source of the switch setting I of instance BSW 1 of the binary changeover switch.

r20215 BO: BSW 1 output Q / BSW 1 output Q

SERVO_S110-DP (FBLOCKS), SERVO_S110-CAN (FBLOCKS), SERVO_S110-PN (FBLOCKS)

Can be changed: -	**Calculated:** -	**Access level:** 1
Data type: Unsigned32	**Dyn. index:** -	**Func. diagram:** 7250
P-Group: -	**Unit group:** -	**Unit selection:** -
Not for motor type: -	**Scaling:** -	**Expert list:** 1
Min	**Max**	**Factory setting**
-	-	-

Description: Display parameter for output quantity Q of instance BSW 1 of the binary changeover switch.

p20216 BSW 1 run-time group / BSW 1 RTG

SERVO_S110-DP (FBLOCKS), SERVO_S110-CAN (FBLOCKS), SERVO_S110-PN (FBLOCKS)

Can be changed: T	**Calculated:** -	**Access level:** 1
Data type: Integer16	**Dyn. index:** -	**Func. diagram:** 7250
P-Group: -	**Unit group:** -	**Unit selection:** -
Not for motor type: -	**Scaling:** -	**Expert list:** 1
Min	**Max**	**Factory setting**
0	9999	9999

Description: Setting parameter for the run-time group in which the instance BSW 1 of the binary changeover switch is to be called.

Value:
0: Run-time group 0
1: Run-time group 1
2: Run-time group 2
3: Run-time group 3
4: Run-time group 4
5: Run-time group 5
6: Run-time group 6
7: Run-time group 7
8: Run-time group 8
9: Run-time group 9
9999: Do not calculate

p20217 BSW 1 run sequence / BSW 1 RunSeq

SERVO_S110-DP (FBLOCKS), SERVO_S110-CAN (FBLOCKS), SERVO_S110-PN (FBLOCKS)

Can be changed: T	**Calculated:** -	**Access level:** 1
Data type: Unsigned16	**Dyn. index:** -	**Func. diagram:** 7250
P-Group: -	**Unit group:** -	**Unit selection:** -
Not for motor type: -	**Scaling:** -	**Expert list:** 1
Min	**Max**	**Factory setting**
0	7999	590

Description: Setting parameter for the run sequence of instance BSW 1 within the run-time group set in p20216.

Note: The function blocks with a lower run sequence value are calculated before function blocks with a higher run sequence value.

p20218[0...1] CI: NSW 0 inputs / NSW 0 inputs

SERVO_S110-DP (FBLOCKS), SERVO_S110-CAN (FBLOCKS), SERVO_S110-PN (FBLOCKS)

Can be changed: T	**Calculated:** -	**Access level:** 1
Data type: Unsigned32 / FloatingPoint32	**Dyn. index:** -	**Func. diagram:** 7250
P-Group: -	**Unit group:** -	**Unit selection:** -
Not for motor type: -	**Scaling:** PERCENT	**Expert list:** 1
Min	**Max**	**Factory setting**
-	-	0

Description: Sets the signal source of input quantities X0 and X1 of instance NSW 0 of the numeric changeover switch.

Index:
[0] = Input X0
[1] = Input X1

p20219 BI: NSW 0 switch setting I / NSW 0 sw_setting

SERVO_S110-DP (FBLOCKS), SERVO_S110-CAN (FBLOCKS), SERVO_S110-PN (FBLOCKS)

Can be changed: T	**Calculated:** -	**Access level:** 1
Data type: Unsigned32 / Binary	**Dyn. index:** -	**Func. diagram:** 7250
P-Group: -	**Unit group:** -	**Unit selection:** -
Not for motor type: -	**Scaling:** -	**Expert list:** 1
Min	**Max**	**Factory setting**
-	-	0

Description: Sets the signal source of the switch setting I of instance NSW 0 of the numeric changeover switch.

r20220 CO: NSW 0 output Y / NSW 0 output Y

SERVO_S110-DP (FBLOCKS), SERVO_S110-CAN (FBLOCKS), SERVO_S110-PN (FBLOCKS)

Can be changed: -	**Calculated:** -	**Access level:** 1
Data type: FloatingPoint32	**Dyn. index:** -	**Func. diagram:** 7250
P-Group: -	**Unit group:** -	**Unit selection:** -
Not for motor type: -	**Scaling:** PERCENT	**Expert list:** 1
Min	**Max**	**Factory setting**
-	-	-

Description: Display parameter for output quantity Y of instance NSW 0 of the numeric changeover switch.

p20221 NSW 0 run-time group / NSW 0 RTG

SERVO_S110-DP (FBLOCKS), SERVO_S110-CAN (FBLOCKS), SERVO_S110-PN (FBLOCKS)

Can be changed: T	**Calculated:** -	**Access level:** 1
Data type: Integer16	**Dyn. index:** -	**Func. diagram:** 7250
P-Group: -	**Unit group:** -	**Unit selection:** -
Not for motor type: -	**Scaling:** -	**Expert list:** 1
Min	**Max**	**Factory setting**
0	9999	9999

Description: Setting parameter for the run-time group in which the instance NSW 0 of the numeric changeover switch is to be called.

Value:

0: Run-time group 0
1: Run-time group 1
2: Run-time group 2
3: Run-time group 3
4: Run-time group 4
5: Run-time group 5
6: Run-time group 6
7: Run-time group 7
8: Run-time group 8
9: Run-time group 9
9999: Do not calculate

p20222 NSW 0 run sequence / NSW 0 RunSeq

SERVO_S110-DP (FBLOCKS), SERVO_S110-CAN (FBLOCKS), SERVO_S110-PN (FBLOCKS)

Can be changed: T	**Calculated:** -	**Access level:** 1
Data type: Unsigned16	**Dyn. index:** -	**Func. diagram:** 7250
P-Group: -	**Unit group:** -	**Unit selection:** -
Not for motor type: -	**Scaling:** -	**Expert list:** 1
Min	**Max**	**Factory setting**
0	32000	610

Description: Setting parameter for the run sequence of instance NSW 0 within the run-time group set in p20221.

Note: The function blocks with a lower run sequence value are calculated before function blocks with a higher run sequence value.

p20223[0...1] CI: NSW 1 inputs / NSW 1 inputs

SERVO_S110-DP (FBLOCKS), SERVO_S110-CAN (FBLOCKS), SERVO_S110-PN (FBLOCKS)

Can be changed: T	**Calculated:** -	**Access level:** 1
Data type: Unsigned32 / FloatingPoint32	**Dyn. index:** -	**Func. diagram:** 7250
P-Group: -	**Unit group:** -	**Unit selection:** -
Not for motor type: -	**Scaling:** PERCENT	**Expert list:** 1
Min	**Max**	**Factory setting**
-	-	0

Description: Sets the signal source of input quantities X0 and X1 of instance NSW 1 of the numeric changeover switch.

Index:
[0] = Input X0
[1] = Input X1

p20224 BI: NSW 1 switch setting I / NSW 1 sw_setting

SERVO_S110-DP (FBLOCKS), SERVO_S110-CAN (FBLOCKS), SERVO_S110-PN (FBLOCKS)

Can be changed: T	**Calculated:** -	**Access level:** 1
Data type: Unsigned32 / Binary	**Dyn. index:** -	**Func. diagram:** 7250
P-Group: -	**Unit group:** -	**Unit selection:** -
Not for motor type: -	**Scaling:** -	**Expert list:** 1
Min	**Max**	**Factory setting**
-	-	0

Description: Sets the signal source of the switch setting I of instance NSW 1 of the numeric changeover switch.

r20225 CO: NSW 1 output Y / NSW 1 output Y

SERVO_S110-DP (FBLOCKS), SERVO_S110-CAN (FBLOCKS), SERVO_S110-PN (FBLOCKS)

Can be changed: -	**Calculated:** -	**Access level:** 1
Data type: FloatingPoint32	**Dyn. index:** -	**Func. diagram:** 7250
P-Group: -	**Unit group:** -	**Unit selection:** -
Not for motor type: -	**Scaling:** PERCENT	**Expert list:** 1
Min	**Max**	**Factory setting**
-	-	-

Description: Display parameter for output quantity Y of instance NSW 1 of the numeric changeover switch.

p20226 NSW 1 run-time group / NSW 1 RTG

SERVO_S110-DP (FBLOCKS), SERVO_S110-CAN (FBLOCKS), SERVO_S110-PN (FBLOCKS)

Can be changed: T	**Calculated:** -	**Access level:** 1
Data type: Integer16	**Dyn. index:** -	**Func. diagram:** 7250
P-Group: -	**Unit group:** -	**Unit selection:** -
Not for motor type: -	**Scaling:** -	**Expert list:** 1
Min	**Max**	**Factory setting**
0	9999	9999

Description: Setting parameter for the run-time group in which the instance NSW 1 of the numeric changeover switch is to be called.

Value:
0: Run-time group 0
1: Run-time group 1
2: Run-time group 2
3: Run-time group 3
4: Run-time group 4
5: Run-time group 5
6: Run-time group 6
7: Run-time group 7
8: Run-time group 8
9: Run-time group 9
9999: Do not calculate

p20227 NSW 1 run sequence / NSW 1 RunSeq

SERVO_S110-DP (FBLOCKS), SERVO_S110-CAN (FBLOCKS), SERVO_S110-PN (FBLOCKS)

Can be changed: T	**Calculated:** -	**Access level:** 1
Data type: Unsigned16	**Dyn. index:** -	**Func. diagram:** 7250
P-Group: -	**Unit group:** -	**Unit selection:** -
Not for motor type: -	**Scaling:** -	**Expert list:** 1
Min	**Max**	**Factory setting**
0	32000	620

Description: Setting parameter for the run sequence of instance NSW 1 within the run-time group set in p20226.

Note: The function blocks with a lower run sequence value are calculated before function blocks with a higher run sequence value.

p20228 CI: LIM 0 input X / LIM 0 input X

SERVO_S110-DP (FBLOCKS), SERVO_S110-CAN (FBLOCKS), SERVO_S110-PN (FBLOCKS)

Can be changed: T	**Calculated:** -	**Access level:** 1
Data type: Unsigned32 / FloatingPoint32	**Dyn. index:** -	**Func. diagram:** 7260
P-Group: -	**Unit group:** -	**Unit selection:** -
Not for motor type: -	**Scaling:** PERCENT	**Expert list:** 1
Min	**Max**	**Factory setting**
-	-	0

Description: Sets the signal source of input quantity X of instance LIM 0 of the limiter.

p20229 LIM 0 upper limit value LU / LIM 0 upper lim LU

SERVO_S110-DP (FBLOCKS), SERVO_S110-CAN (FBLOCKS), SERVO_S110-PN (FBLOCKS)

Can be changed: T	**Calculated:** -	**Access level:** 1
Data type: FloatingPoint32	**Dyn. index:** -	**Func. diagram:** 7260
P-Group: -	**Unit group:** -	**Unit selection:** -
Not for motor type: -	**Scaling:** -	**Expert list:** 1
Min	**Max**	**Factory setting**
-340.28235E36	340.28235E36	0.0000

Description: Setting parameter for the upper limit value LU of instance LIM 0 of the limiter.

p20230 LIM 0 lower limit value LL / LIM 0 lower lim LL

SERVO_S110-DP (FBLOCKS), SERVO_S110-CAN (FBLOCKS), SERVO_S110-PN (FBLOCKS)

Can be changed: T	**Calculated:** -	**Access level:** 1
Data type: FloatingPoint32	**Dyn. index:** -	**Func. diagram:** 7260
P-Group: -	**Unit group:** -	**Unit selection:** -
Not for motor type: -	**Scaling:** -	**Expert list:** 1
Min	**Max**	**Factory setting**
-340.28235E36	340.28235E36	0.0000

Description: Setting parameter for the lower limit value LL of instance LIM 0 of the limiter.

r20231 CO: LIM 0 output Y / LIM 0 output Y

SERVO_S110-DP (FBLOCKS), SERVO_S110-CAN (FBLOCKS), SERVO_S110-PN (FBLOCKS)

Can be changed: -	**Calculated:** -	**Access level:** 1
Data type: FloatingPoint32	**Dyn. index:** -	**Func. diagram:** 7260
P-Group: -	**Unit group:** -	**Unit selection:** -
Not for motor type: -	**Scaling:** PERCENT	**Expert list:** 1
Min	**Max**	**Factory setting**
-	-	-

Description: Display parameter for the limited output quantity Y of instance LIM 0 of the limiter.

r20232 BO: LIM 0 input quantity at the upper limit QU / LIM 0 QU

SERVO_S110-DP (FBLOCKS), SERVO_S110-CAN (FBLOCKS), SERVO_S110-PN (FBLOCKS)

Can be changed: -	**Calculated:** -	**Access level:** 1
Data type: Unsigned32	**Dyn. index:** -	**Func. diagram:** 7260
P-Group: -	**Unit group:** -	**Unit selection:** -
Not for motor type: -	**Scaling:** -	**Expert list:** 1
Min	**Max**	**Factory setting**
-	-	-

Description: Display parameter of instance LIM 0 of limiter QU (upper limit reached), i.e. QU = 1 for X >= LU.

r20233 BO: LIM 0 input quantity at the lower limit QL / LIM 0 QL

SERVO_S110-DP (FBLOCKS), SERVO_S110-CAN (FBLOCKS), SERVO_S110-PN (FBLOCKS)

Can be changed: -	**Calculated:** -	**Access level:** 1
Data type: Unsigned32	**Dyn. index:** -	**Func. diagram:** 7260
P-Group: -	**Unit group:** -	**Unit selection:** -
Not for motor type: -	**Scaling:** -	**Expert list:** 1
Min	**Max**	**Factory setting**
-	-	-

Description: Display parameter of instance LIM 0 of limiter QL (lower limit reached), i.e. QL = 1 for X <= LL.

p20234 LIM 0 run-time group / LIM 0 RTG

SERVO_S110-DP (FBLOCKS), SERVO_S110-CAN (FBLOCKS), SERVO_S110-PN (FBLOCKS)

Can be changed: T	**Calculated:** -	**Access level:** 1
Data type: Integer16	**Dyn. index:** -	**Func. diagram:** 7260
P-Group: -	**Unit group:** -	**Unit selection:** -
Not for motor type: -	**Scaling:** -	**Expert list:** 1
Min	**Max**	**Factory setting**
0	9999	9999

Description: Setting parameter for the run-time group in which instance LIM 0 of the limiter is to be called.

Value:
0: Run-time group 0
1: Run-time group 1
2: Run-time group 2
3: Run-time group 3
4: Run-time group 4
5: Run-time group 5
6: Run-time group 6
7: Run-time group 7
8: Run-time group 8
9: Run-time group 9
9999: Do not calculate

p20235 LIM 0 run sequence / LIM 0 RunSeq

SERVO_S110-DP (FBLOCKS), SERVO_S110-CAN (FBLOCKS), SERVO_S110-PN (FBLOCKS)

Can be changed: T	**Calculated:** -	**Access level:** 1
Data type: Unsigned16	**Dyn. index:** -	**Func. diagram:** 7260
P-Group: -	**Unit group:** -	**Unit selection:** -
Not for motor type: -	**Scaling:** -	**Expert list:** 1
Min	**Max**	**Factory setting**
0	32000	640

Description: Setting parameter for the run sequence of instance LIM 0 within the run-time group set in p20234.

Note: The function blocks with a lower run sequence value are calculated before function blocks with a higher run sequence value.

p20236 CI: LIM 1 input X / LIM 1 input X

SERVO_S110-DP (FBLOCKS), SERVO_S110-CAN (FBLOCKS), SERVO_S110-PN (FBLOCKS)

Can be changed: T	**Calculated:** -	**Access level:** 1
Data type: Unsigned32 / FloatingPoint32	**Dyn. index:** -	**Func. diagram:** 7260
P-Group: -	**Unit group:** -	**Unit selection:** -
Not for motor type: -	**Scaling:** PERCENT	**Expert list:** 1
Min	**Max**	**Factory setting**
-	-	0

Description: Sets the signal source of input quantity X of instance LIM 1 of the limiter.

p20237 LIM 1 upper limit value LU / LIM 1 upper lim LU

SERVO_S110-DP (FBLOCKS), SERVO_S110-CAN (FBLOCKS), SERVO_S110-PN (FBLOCKS)

Can be changed: T	**Calculated:** -	**Access level:** 1
Data type: FloatingPoint32	**Dyn. index:** -	**Func. diagram:** 7260
P-Group: -	**Unit group:** -	**Unit selection:** -
Not for motor type: -	**Scaling:** -	**Expert list:** 1
Min	**Max**	**Factory setting**
-340.28235E36	340.28235E36	0.0000

Description: Setting parameter for the upper limit value LU of instance LIM 1 of the limiter.

p20238 LIM 1 lower limit value LL / LIM 1 lower lim LL

SERVO_S110-DP (FBLOCKS), SERVO_S110-CAN (FBLOCKS), SERVO_S110-PN (FBLOCKS)

Can be changed: T	**Calculated:** -	**Access level:** 1
Data type: FloatingPoint32	**Dyn. index:** -	**Func. diagram:** 7260
P-Group: -	**Unit group:** -	**Unit selection:** -
Not for motor type: -	**Scaling:** -	**Expert list:** 1
Min	**Max**	**Factory setting**
-340.28235E36	340.28235E36	0.0000

Description: Setting parameter for the lower limit value LL of instance LIM 1 of the limiter.

r20239 CO: LIM 1 output Y / LIM 1 output Y

SERVO_S110-DP (FBLOCKS), SERVO_S110-CAN (FBLOCKS), SERVO_S110-PN (FBLOCKS)

Can be changed: -	**Calculated:** -	**Access level:** 1
Data type: FloatingPoint32	**Dyn. index:** -	**Func. diagram:** 7260
P-Group: -	**Unit group:** -	**Unit selection:** -
Not for motor type: -	**Scaling:** PERCENT	**Expert list:** 1
Min	**Max**	**Factory setting**
-	-	-

Description: Display parameter for the limited output quantity Y of instance LIM 1 of the limiter.

r20240 BO: LIM 1 input quantity at the upper limit QU / LIM 1 QU

SERVO_S110-DP (FBLOCKS), SERVO_S110-CAN (FBLOCKS), SERVO_S110-PN (FBLOCKS)

Can be changed: -	**Calculated:** -	**Access level:** 1
Data type: Unsigned32	**Dyn. index:** -	**Func. diagram:** 7260
P-Group: -	**Unit group:** -	**Unit selection:** -
Not for motor type: -	**Scaling:** -	**Expert list:** 1
Min	**Max**	**Factory setting**
-	-	-

Description: Display parameter of instance LIM 1 of limiter QU (upper limit reached), i.e. QU = 1 for X >= LU.

r20241 BO: LIM 1 input quantity at the lower limit QL / LIM 1 QL

SERVO_S110-DP (FBLOCKS), SERVO_S110-CAN (FBLOCKS), SERVO_S110-PN (FBLOCKS)

Can be changed: -	**Calculated:** -	**Access level:** 1
Data type: Unsigned32	**Dyn. index:** -	**Func. diagram:** 7260
P-Group: -	**Unit group:** -	**Unit selection:** -
Not for motor type: -	**Scaling:** -	**Expert list:** 1
Min	**Max**	**Factory setting**
-	-	-

Description: Display parameter of instance LIM 1 of limiter QL (lower limit reached), i.e. QL = 1 for X <= LL.

p20242 LIM 1 run-time group / LIM 1 RTG

SERVO_S110-DP (FBLOCKS), SERVO_S110-CAN (FBLOCKS), SERVO_S110-PN (FBLOCKS)

Can be changed: T	**Calculated:** -	**Access level:** 1
Data type: Integer16	**Dyn. index:** -	**Func. diagram:** 7260
P-Group: -	**Unit group:** -	**Unit selection:** -
Not for motor type: -	**Scaling:** -	**Expert list:** 1
Min	**Max**	**Factory setting**
0	9999	9999

Description: Setting parameter for the run-time group in which instance LIM 1 of the limiter is to be called.

Value:
0: Run-time group 0
1: Run-time group 1
2: Run-time group 2
3: Run-time group 3
4: Run-time group 4
5: Run-time group 5
6: Run-time group 6
7: Run-time group 7
8: Run-time group 8
9: Run-time group 9
9999: Do not calculate

p20243 LIM 1 run sequence / LIM 1 RunSeq

SERVO_S110-DP (FBLOCKS), SERVO_S110-CAN (FBLOCKS), SERVO_S110-PN (FBLOCKS)

Can be changed: T	**Calculated:** -	**Access level:** 1
Data type: Unsigned16	**Dyn. index:** -	**Func. diagram:** 7260
P-Group: -	**Unit group:** -	**Unit selection:** -
Not for motor type: -	**Scaling:** -	**Expert list:** 1
Min	**Max**	**Factory setting**
0	32000	650

Description: Setting parameter for the run sequence of instance LIM 1 within the run-time group set in p20242.

Note: The function blocks with a lower run sequence value are calculated before function blocks with a higher run sequence value.

p20244[0...1] CI: PT1 0 inputs / PT1 0 inputs

SERVO_S110-DP (FBLOCKS), SERVO_S110-CAN (FBLOCKS), SERVO_S110-PN (FBLOCKS)

Can be changed: T	**Calculated:** -	**Access level:** 1
Data type: Unsigned32 / FloatingPoint32	**Dyn. index:** -	**Func. diagram:** 7262
P-Group: -	**Unit group:** -	**Unit selection:** -
Not for motor type: -	**Scaling:** PERCENT	**Expert list:** 1
Min	**Max**	**Factory setting**
-	-	0

Description: Sets the signal source of input quantity X and of setting value SV of instance PT1 0 of the smoothing element.

Index:
[0] = Input X
[1] = Setting value SV

p20245 BI: PT1 0 accept setting value S / PT1 0 acc set val

SERVO_S110-DP (FBLOCKS), SERVO_S110-CAN (FBLOCKS), SERVO_S110-PN (FBLOCKS)

Can be changed: T	**Calculated:** -	**Access level:** 1
Data type: Unsigned32 / Binary	**Dyn. index:** -	**Func. diagram:** 7262
P-Group: -	**Unit group:** -	**Unit selection:** -
Not for motor type: -	**Scaling:** -	**Expert list:** 1
Min	**Max**	**Factory setting**
-	-	0

Description: Sets the signal source for the "accept setting value" signal of instant PT1 0 of the smoothing element.

p20246 PT1 0 smoothing time constant in ms / PT1 0 T_smooth ms

SERVO_S110-DP (FBLOCKS), SERVO_S110-CAN (FBLOCKS), SERVO_S110-PN (FBLOCKS)

Can be changed: T	**Calculated:** -	**Access level:** 1
Data type: FloatingPoint32	**Dyn. index:** -	**Func. diagram:** 7262
P-Group: -	**Unit group:** -	**Unit selection:** -
Not for motor type: -	**Scaling:** -	**Expert list:** 1
Min	**Max**	**Factory setting**
0.00	340.28235E36	0.00

Description: Sets the smoothing time constant T in milliseconds of instance PT1 0 of the smoothing element.

r20247 CO: PT1 0 output Y / PT1 0 output Y

SERVO_S110-DP (FBLOCKS), SERVO_S110-CAN (FBLOCKS), SERVO_S110-PN (FBLOCKS)

Can be changed: -	**Calculated:** -	**Access level:** 1
Data type: FloatingPoint32	**Dyn. index:** -	**Func. diagram:** 7262
P-Group: -	**Unit group:** -	**Unit selection:** -
Not for motor type: -	**Scaling:** PERCENT	**Expert list:** 1
Min	**Max**	**Factory setting**
-	-	-

Description: Display parameter for the smoothed output quantity Y of instance PT1 0 of the smoothing element.

p20248 PT1 0 run-time group / PT1 0 RTG

SERVO_S110-DP (FBLOCKS), SERVO_S110-CAN (FBLOCKS), SERVO_S110-PN (FBLOCKS)

Can be changed: T	**Calculated:** -	**Access level:** 1
Data type: Integer16	**Dyn. index:** -	**Func. diagram:** 7262
P-Group: -	**Unit group:** -	**Unit selection:** -
Not for motor type: -	**Scaling:** -	**Expert list:** 1
Min	**Max**	**Factory setting**
0	9999	9999

Description: Setting parameter for the run-time group in which instance PT1 0 of the smoothing element is to be called.

Value:
0: Run-time group 0
1: Run-time group 1
2: Run-time group 2
3: Run-time group 3
4: Run-time group 4
5: Run-time group 5
6: Run-time group 6
7: Run-time group 7
8: Run-time group 8
9: Run-time group 9
9999: Do not calculate

p20249 PT1 0 run sequence / PT1 0 RunSeq

SERVO_S110-DP (FBLOCKS), SERVO_S110-CAN (FBLOCKS), SERVO_S110-PN (FBLOCKS)

Can be changed: T	**Calculated:** -	**Access level:** 1
Data type: Unsigned16	**Dyn. index:** -	**Func. diagram:** 7262
P-Group: -	**Unit group:** -	**Unit selection:** -
Not for motor type: -	**Scaling:** -	**Expert list:** 1
Min	**Max**	**Factory setting**
0	32000	670

Description: Setting parameter for the run sequence of instance PT1 0 within the run-time group set in p20248.

Note: The function blocks with a lower run sequence value are calculated before function blocks with a higher run sequence value.

p20250[0...1] CI: PT1 1 inputs / PT1 1 inputs

SERVO_S110-DP (FBLOCKS), SERVO_S110-CAN (FBLOCKS), SERVO_S110-PN (FBLOCKS)

Can be changed: T	**Calculated:** -	**Access level:** 1
Data type: Unsigned32 / FloatingPoint32	**Dyn. index:** -	**Func. diagram:** 7262
P-Group: -	**Unit group:** -	**Unit selection:** -
Not for motor type: -	**Scaling:** PERCENT	**Expert list:** 1
Min	**Max**	**Factory setting**
-	-	0

Description: Sets the signal source of input quantity X and of setting value SV of instance PT1 1 of the smoothing element.

Index: [0] = Input X
[1] = Setting value SV

p20251 BI: PT1 1 accept setting value S / PT1 1 acc set val

SERVO_S110-DP (FBLOCKS), SERVO_S110-CAN (FBLOCKS), SERVO_S110-PN (FBLOCKS)

Can be changed: T	**Calculated:** -	**Access level:** 1
Data type: Unsigned32 / Binary	**Dyn. index:** -	**Func. diagram:** 7262
P-Group: -	**Unit group:** -	**Unit selection:** -
Not for motor type: -	**Scaling:** -	**Expert list:** 1
Min	**Max**	**Factory setting**
-	-	0

Description: Sets the signal source for the "accept setting value" signal of instant PT1 1 of the smoothing element.

p20252 PT1 1 smoothing time constant in ms / PT1 1 T_smooth ms

SERVO_S110-DP (FBLOCKS), SERVO_S110-CAN (FBLOCKS), SERVO_S110-PN (FBLOCKS)

Can be changed: T	**Calculated:** -	**Access level:** 1
Data type: FloatingPoint32	**Dyn. index:** -	**Func. diagram:** 7262
P-Group: -	**Unit group:** -	**Unit selection:** -
Not for motor type: -	**Scaling:** -	**Expert list:** 1
Min	**Max**	**Factory setting**
0.00	340.28235E36	0.00

Description: Sets the smoothing time constant T in milliseconds of instance PT1 1 of the smoothing element.

r20253 CO: PT1 1 output Y / PT1 1 output Y

SERVO_S110-DP (FBLOCKS), SERVO_S110-CAN (FBLOCKS), SERVO_S110-PN (FBLOCKS)

Can be changed: -	**Calculated:** -	**Access level:** 1
Data type: FloatingPoint32	**Dyn. index:** -	**Func. diagram:** 7262
P-Group: -	**Unit group:** -	**Unit selection:** -
Not for motor type: -	**Scaling:** PERCENT	**Expert list:** 1
Min	**Max**	**Factory setting**
-	-	-

Description: Display parameter for the smoothed output quantity Y of instance PT1 1 of the smoothing element.

p20254 PT1 1 run-time group / PT1 1 RTG

SERVO_S110-DP (FBLOCKS), SERVO_S110-CAN (FBLOCKS), SERVO_S110-PN (FBLOCKS)

Can be changed: T	**Calculated:** -	**Access level:** 1
Data type: Integer16	**Dyn. index:** -	**Func. diagram:** 7262
P-Group: -	**Unit group:** -	**Unit selection:** -
Not for motor type: -	**Scaling:** -	**Expert list:** 1
Min	**Max**	**Factory setting**
0	9999	9999

Description: Setting parameter for the run-time group in which instance PT1 1 of the smoothing element is to be called.

Value:
0: Run-time group 0
1: Run-time group 1
2: Run-time group 2
3: Run-time group 3
4: Run-time group 4
5: Run-time group 5
6: Run-time group 6
7: Run-time group 7
8: Run-time group 8
9: Run-time group 9
9999: Do not calculate

p20255 PT1 1 run sequence / PT1 1 RunSeq

SERVO_S110-DP (FBLOCKS), SERVO_S110-CAN (FBLOCKS), SERVO_S110-PN (FBLOCKS)

Can be changed: T	**Calculated:** -	**Access level:** 1
Data type: Unsigned16	**Dyn. index:** -	**Func. diagram:** 7262
P-Group: -	**Unit group:** -	**Unit selection:** -
Not for motor type: -	**Scaling:** -	**Expert list:** 1
Min	**Max**	**Factory setting**
0	32000	680

Description: Setting parameter for the run sequence of instance PT1 1 within the run-time group set in p20254.

Note: The function blocks with a lower run sequence value are calculated before function blocks with a higher run sequence value.

p20256[0...1] CI: INT 0 inputs / INT 0 inputs

SERVO_S110-DP (FBLOCKS), SERVO_S110-CAN (FBLOCKS), SERVO_S110-PN (FBLOCKS)

Can be changed: T	**Calculated:** -	**Access level:** 1
Data type: Unsigned32 / FloatingPoint32	**Dyn. index:** -	**Func. diagram:** 7264
P-Group: -	**Unit group:** -	**Unit selection:** -
Not for motor type: -	**Scaling:** PERCENT	**Expert list:** 1
Min	**Max**	**Factory setting**
-	-	0

Description: Sets the signal source of input quantity X and of setting value SV of instance INT 0 of the integrator.

Index:
[0] = Input X
[1] = Setting value SV

p20257 INT 0 upper limit value LU / INT 0 upper lim LU

SERVO_S110-DP (FBLOCKS), SERVO_S110-CAN (FBLOCKS), SERVO_S110-PN (FBLOCKS)

Can be changed: T	**Calculated:** -	**Access level:** 1
Data type: FloatingPoint32	**Dyn. index:** -	**Func. diagram:** 7264
P-Group: -	**Unit group:** -	**Unit selection:** -
Not for motor type: -	**Scaling:** -	**Expert list:** 1
Min	**Max**	**Factory setting**
-340.28235E36	340.28235E36	0.0000

Description: Sets the upper limit value LU of instance INT 0 of the integrator.

p20258 INT 0 lower limit value LL / INT 0 lower lim LL

SERVO_S110-DP (FBLOCKS), SERVO_S110-CAN (FBLOCKS), SERVO_S110-PN (FBLOCKS)

Can be changed: T	**Calculated:** -	**Access level:** 1
Data type: FloatingPoint32	**Dyn. index:** -	**Func. diagram:** 7264
P-Group: -	**Unit group:** -	**Unit selection:** -
Not for motor type: -	**Scaling:** -	**Expert list:** 1
Min	**Max**	**Factory setting**
-340.28235E36	340.28235E36	0.0000

Description: Sets the lower limit value LL of instance INT 0 of the integrator.

p20259 INT 0 integrating time constant in ms / INT 0 T_Integr ms

SERVO_S110-DP (FBLOCKS), SERVO_S110-CAN (FBLOCKS), SERVO_S110-PN (FBLOCKS)

Can be changed: T	**Calculated:** -	**Access level:** 1
Data type: FloatingPoint32	**Dyn. index:** -	**Func. diagram:** 7264
P-Group: -	**Unit group:** -	**Unit selection:** -
Not for motor type: -	**Scaling:** -	**Expert list:** 1
Min	**Max**	**Factory setting**
0.00	340.28235E36	0.00

Description: Sets the integrating time constant Ti in milliseconds of instance INT 0 of the integrator.

p20260 BI: INT 0 accept setting value S / INT 0 acc set val

SERVO_S110-DP (FBLOCKS), SERVO_S110-CAN (FBLOCKS), SERVO_S110-PN (FBLOCKS)

Can be changed: T	**Calculated:** -	**Access level:** 1
Data type: Unsigned32 / Binary	**Dyn. index:** -	**Func. diagram:** 7264
P-Group: -	**Unit group:** -	**Unit selection:** -
Not for motor type: -	**Scaling:** -	**Expert list:** 1
Min	**Max**	**Factory setting**
-	-	0

Description: Sets the signal source for the "accept setting value" signal of instant INT 0 of the integrator.

r20261 CO: INT 0 output Y / INT 0 output Y

SERVO_S110-DP (FBLOCKS), SERVO_S110-CAN (FBLOCKS), SERVO_S110-PN (FBLOCKS)

Can be changed: -	**Calculated:** -	**Access level:** 1
Data type: FloatingPoint32	**Dyn. index:** -	**Func. diagram:** 7264
P-Group: -	**Unit group:** -	**Unit selection:** -
Not for motor type: -	**Scaling:** PERCENT	**Expert list:** 1
Min	**Max**	**Factory setting**
-	-	-

Description: Display parameter for output quantity Y of instance INT 0 of the integrator.
If LL>= LU, then the output quantity Y = LU.

r20262 BO: INT 0 integrator at the upper limit QU / INT 0 QU

SERVO_S110-DP (FBLOCKS), SERVO_S110-CAN (FBLOCKS), SERVO_S110-PN (FBLOCKS)

Can be changed: -	**Calculated:** -	**Access level:** 1
Data type: Unsigned32	**Dyn. index:** -	**Func. diagram:** 7264
P-Group: -	**Unit group:** -	**Unit selection:** -
Not for motor type: -	**Scaling:** -	**Expert list:** 1
Min	**Max**	**Factory setting**
-	-	-

Description: Display parameter for the signal QU that output quantity Y of instance INT 0 of the integrator has reached the upper limit value LU.

r20263 BO: INT 0 integrator at the lower limit QL / INT 0 QL

SERVO_S110-DP (FBLOCKS), SERVO_S110-CAN (FBLOCKS), SERVO_S110-PN (FBLOCKS)

Can be changed: -	**Calculated:** -	**Access level:** 1
Data type: Unsigned32	**Dyn. index:** -	**Func. diagram:** 7264
P-Group: -	**Unit group:** -	**Unit selection:** -
Not for motor type: -	**Scaling:** -	**Expert list:** 1
Min	**Max**	**Factory setting**
-	-	-

Description: Display parameter for the signal QL that output quantity Y of instance INT 0 of the integrator has reached the lower limit value LL.

p20264 INT 0 run-time group / INT 0 RTG

SERVO_S110-DP (FBLOCKS), SERVO_S110-CAN (FBLOCKS), SERVO_S110-PN (FBLOCKS)

Can be changed: T	**Calculated:** -	**Access level:** 1
Data type: Integer16	**Dyn. index:** -	**Func. diagram:** 7264
P-Group: -	**Unit group:** -	**Unit selection:** -
Not for motor type: -	**Scaling:** -	**Expert list:** 1
Min	**Max**	**Factory setting**
0	9999	9999

Description: Setting parameter for the run-time group in which instance INT 0 of the integrator is to be called.

Value:
0: Run-time group 0
1: Run-time group 1
2: Run-time group 2
3: Run-time group 3
4: Run-time group 4
5: Run-time group 5
6: Run-time group 6
7: Run-time group 7
8: Run-time group 8
9: Run-time group 9
9999: Do not calculate

p20265 INT 0 run sequence / INT 0 RunSeq

SERVO_S110-DP (FBLOCKS), SERVO_S110-CAN (FBLOCKS), SERVO_S110-PN (FBLOCKS)

Can be changed: T	**Calculated:** -	**Access level:** 1
Data type: Unsigned16	**Dyn. index:** -	**Func. diagram:** 7264
P-Group: -	**Unit group:** -	**Unit selection:** -
Not for motor type: -	**Scaling:** -	**Expert list:** 1
Min	**Max**	**Factory setting**
0	32000	700

Description: Setting parameter for the run sequence of instance INT 0 within the run-time group set in p20264.

Note: The function blocks with a lower run sequence value are calculated before function blocks with a higher run sequence value.

p20266 CI: LVM 0 input X / LVM 0 input X

SERVO_S110-DP (FBLOCKS), SERVO_S110-CAN (FBLOCKS), SERVO_S110-PN (FBLOCKS)

Can be changed: T	**Calculated:** -	**Access level:** 1
Data type: Unsigned32 / FloatingPoint32	**Dyn. index:** -	**Func. diagram:** 7270
P-Group: -	**Unit group:** -	**Unit selection:** -
Not for motor type: -	**Scaling:** PERCENT	**Expert list:** 1
Min	**Max**	**Factory setting**
-	-	0

Description: Sets the signal source of input quantity X of instance LVM 0 of the double-sided limiter.

p20267 LVM 0 interval average value M / LVM 0 avg value M

SERVO_S110-DP (FBLOCKS), SERVO_S110-CAN (FBLOCKS), SERVO_S110-PN (FBLOCKS)

Can be changed: T	**Calculated:** -	**Access level:** 1
Data type: FloatingPoint32	**Dyn. index:** -	**Func. diagram:** 7270
P-Group: -	**Unit group:** -	**Unit selection:** -
Not for motor type: -	**Scaling:** -	**Expert list:** 1
Min	**Max**	**Factory setting**
-340.28235E36	340.28235E36	0.0000

Description: Setting parameter for the interval average M of instance LVM 0 of the double-sided limiter.

p20268 LVM 0 interval limit L / LVM 0 limit L

SERVO_S110-DP (FBLOCKS), SERVO_S110-CAN (FBLOCKS), SERVO_S110-PN (FBLOCKS)

Can be changed: T	**Calculated:** -	**Access level:** 1
Data type: FloatingPoint32	**Dyn. index:** -	**Func. diagram:** 7270
P-Group: -	**Unit group:** -	**Unit selection:** -
Not for motor type: -	**Scaling:** -	**Expert list:** 1
Min	**Max**	**Factory setting**
-340.28235E36	340.28235E36	0.0000

Description: Setting parameter for the interval limit L of instance LVM 0 of the double-sided limiter.

p20269 LVM 0 hyst HY / LVM 0 hyst HY

SERVO_S110-DP (FBLOCKS), SERVO_S110-CAN (FBLOCKS), SERVO_S110-PN (FBLOCKS)

Can be changed: T	**Calculated:** -	**Access level:** 1
Data type: FloatingPoint32	**Dyn. index:** -	**Func. diagram:** 7270
P-Group: -	**Unit group:** -	**Unit selection:** -
Not for motor type: -	**Scaling:** -	**Expert list:** 1
Min	**Max**	**Factory setting**
-340.28235E36	340.28235E36	0.0000

Description: Setting parameter for hysteresis HY of instance LVM 0 of the double-sided limiter.

r20270 BO: LVM 0 input quantity above interval QU / LVM 0 X above QU

SERVO_S110-DP (FBLOCKS), SERVO_S110-CAN (FBLOCKS), SERVO_S110-PN (FBLOCKS)

Can be changed: -	**Calculated:** -	**Access level:** 1
Data type: Unsigned32	**Dyn. index:** -	**Func. diagram:** 7270
P-Group: -	**Unit group:** -	**Unit selection:** -
Not for motor type: -	**Scaling:** -	**Expert list:** 1
Min	**Max**	**Factory setting**
-	-	-

Description: Display parameter of instance LVM 0 of the double-sided limiter that input quantity X was at least once X > M + L and X is >= M + L - HY.

r20271 BO: LVM 0 input quantity within interval QM / LVM 0 X within QM

SERVO_S110-DP (FBLOCKS), SERVO_S110-CAN (FBLOCKS), SERVO_S110-PN (FBLOCKS)

Can be changed: -	**Calculated:** -	**Access level:** 1
Data type: Unsigned32	**Dyn. index:** -	**Func. diagram:** 7270
P-Group: -	**Unit group:** -	**Unit selection:** -
Not for motor type: -	**Scaling:** -	**Expert list:** 1
Min	**Max**	**Factory setting**
-	-	-

Description: Display parameter of instance LVM 0 of the double-sided limiter that the input quantity X lies within the interval.

r20272 BO: LVM 0 input quantity below interval QL / LVM 0 X below QL

SERVO_S110-DP (FBLOCKS), SERVO_S110-CAN (FBLOCKS), SERVO_S110-PN (FBLOCKS)

Can be changed: -	**Calculated:** -	**Access level:** 1
Data type: Unsigned32	**Dyn. index:** -	**Func. diagram:** 7270
P-Group: -	**Unit group:** -	**Unit selection:** -
Not for motor type: -	**Scaling:** -	**Expert list:** 1
Min	**Max**	**Factory setting**
-	-	-

Description: Display parameter of instance LVM 0 of the double-sided limiter that input quantity X was at least once X < M - L and X is <= M - L + HY.

p20273 LVM 0 run-time group / LVM 0 RTG

SERVO_S110-DP (FBLOCKS), SERVO_S110-CAN (FBLOCKS), SERVO_S110-PN (FBLOCKS)

Can be changed: T	**Calculated:** -	**Access level:** 1
Data type: Integer16	**Dyn. index:** -	**Func. diagram:** 7270
P-Group: -	**Unit group:** -	**Unit selection:** -
Not for motor type: -	**Scaling:** -	**Expert list:** 1
Min	**Max**	**Factory setting**
0	9999	9999

Description: Setting parameter for the run-time group in which instance LVM 0 of the double-sided limiter is to be called.

Value:
0: Run-time group 0
1: Run-time group 1
2: Run-time group 2
3: Run-time group 3
4: Run-time group 4
5: Run-time group 5
6: Run-time group 6
7: Run-time group 7
8: Run-time group 8
9: Run-time group 9
9999: Do not calculate

p20274 LVM 0 run sequence / LVM 0 RunSeq

SERVO_S110-DP (FBLOCKS), SERVO_S110-CAN (FBLOCKS), SERVO_S110-PN (FBLOCKS)

Can be changed: T	**Calculated:** -	**Access level:** 1
Data type: Unsigned16	**Dyn. index:** -	**Func. diagram:** 7270
P-Group: -	**Unit group:** -	**Unit selection:** -
Not for motor type: -	**Scaling:** -	**Expert list:** 1
Min	**Max**	**Factory setting**
0	7999	720

Description: Setting parameter for the run sequence of instance LVM 0 within the run-time group set in p20273.

Note: The function blocks with a lower run sequence value are calculated before function blocks with a higher run sequence value.

p20275 CI: LVM 1 input X / LVM 1 input X

SERVO_S110-DP (FBLOCKS), SERVO_S110-CAN (FBLOCKS), SERVO_S110-PN (FBLOCKS)

Can be changed: T	**Calculated:** -	**Access level:** 1
Data type: Unsigned32 / FloatingPoint32	**Dyn. index:** -	**Func. diagram:** 7270
P-Group: -	**Unit group:** -	**Unit selection:** -
Not for motor type: -	**Scaling:** PERCENT	**Expert list:** 1
Min	**Max**	**Factory setting**
-	-	0

Description: Sets the signal source of input quantity X of instance LVM 1 of the double-sided limiter.

p20276 LVM 1 interval average value M / LVM 1 avg value M

SERVO_S110-DP (FBLOCKS), SERVO_S110-CAN (FBLOCKS), SERVO_S110-PN (FBLOCKS)

Can be changed: T	**Calculated:** -	**Access level:** 1
Data type: FloatingPoint32	**Dyn. index:** -	**Func. diagram:** 7270
P-Group: -	**Unit group:** -	**Unit selection:** -
Not for motor type: -	**Scaling:** -	**Expert list:** 1
Min	**Max**	**Factory setting**
-340.28235E36	340.28235E36	0.0000

Description: Setting parameter for the interval average M of instance LVM 1 of the double-sided limiter.

p20277 LVM 1 interval limit L / LVM 1 limit L

SERVO_S110-DP (FBLOCKS), SERVO_S110-CAN (FBLOCKS), SERVO_S110-PN (FBLOCKS)

Can be changed: T	**Calculated:** -	**Access level:** 1
Data type: FloatingPoint32	**Dyn. index:** -	**Func. diagram:** 7270
P-Group: -	**Unit group:** -	**Unit selection:** -
Not for motor type: -	**Scaling:** -	**Expert list:** 1
Min	**Max**	**Factory setting**
-340.28235E36	340.28235E36	0.0000

Description: Setting parameter for the interval limit L of instance LVM 1 of the double-sided limiter.

p20278 LVM 1 hyst HY / LVM 1 hyst HY

SERVO_S110-DP (FBLOCKS), SERVO_S110-CAN (FBLOCKS), SERVO_S110-PN (FBLOCKS)

Can be changed: T	**Calculated:** -	**Access level:** 1
Data type: FloatingPoint32	**Dyn. index:** -	**Func. diagram:** 7270
P-Group: -	**Unit group:** -	**Unit selection:** -
Not for motor type: -	**Scaling:** -	**Expert list:** 1
Min	**Max**	**Factory setting**
-340.28235E36	340.28235E36	0.0000

Description: Setting parameter for hysteresis HY of instance LVM 1 of the double-sided limiter.

r20279 BO: LVM 1 input quantity above interval QU / LVM 1 X above QU

SERVO_S110-DP (FBLOCKS), SERVO_S110-CAN (FBLOCKS), SERVO_S110-PN (FBLOCKS)

Can be changed: -	**Calculated:** -	**Access level:** 1
Data type: Unsigned32	**Dyn. index:** -	**Func. diagram:** 7270
P-Group: -	**Unit group:** -	**Unit selection:** -
Not for motor type: -	**Scaling:** -	**Expert list:** 1
Min	**Max**	**Factory setting**
-	-	-

Description: Display parameter of instance LVM 1 of the double-sided limiter that input quantity X was at least once X > M + L and X is >= M + L - HY.

r20280 BO: LVM 1 input quantity within interval QM / LVM 1 X within QM

SERVO_S110-DP (FBLOCKS), SERVO_S110-CAN (FBLOCKS), SERVO_S110-PN (FBLOCKS)

Can be changed: -	**Calculated:** -	**Access level:** 1
Data type: Unsigned32	**Dyn. index:** -	**Func. diagram:** 7270
P-Group: -	**Unit group:** -	**Unit selection:** -
Not for motor type: -	**Scaling:** -	**Expert list:** 1
Min	**Max**	**Factory setting**
-	-	-

Description: Display parameter of instance LVM 1 of the double-sided limiter that the input quantity X lies within the interval.

r20281 BO: LVM 1 input quantity below interval QL / LVM 1 X below QL

SERVO_S110-DP (FBLOCKS), SERVO_S110-CAN (FBLOCKS), SERVO_S110-PN (FBLOCKS)

Can be changed: -	**Calculated:** -	**Access level:** 1
Data type: Unsigned32	**Dyn. index:** -	**Func. diagram:** 7270
P-Group: -	**Unit group:** -	**Unit selection:** -
Not for motor type: -	**Scaling:** -	**Expert list:** 1
Min	**Max**	**Factory setting**
-	-	-

Description: Display parameter of instance LVM 1 of the double-sided limiter that input quantity X was at least once X < M - L and X is <= M - L + HY.

p20282 LVM 1 run-time group / LVM 1 RTG

SERVO_S110-DP (FBLOCKS), SERVO_S110-CAN (FBLOCKS), SERVO_S110-PN (FBLOCKS)

Can be changed: T	**Calculated:** -	**Access level:** 1
Data type: Integer16	**Dyn. index:** -	**Func. diagram:** 7270
P-Group: -	**Unit group:** -	**Unit selection:** -
Not for motor type: -	**Scaling:** -	**Expert list:** 1
Min	**Max**	**Factory setting**
0	9999	9999

Description: Setting parameter for the run-time group in which instance LVM 1 of the double-sided limiter is to be called.

Value:
0: Run-time group 0
1: Run-time group 1
2: Run-time group 2
3: Run-time group 3
4: Run-time group 4
5: Run-time group 5
6: Run-time group 6
7: Run-time group 7
8: Run-time group 8
9: Run-time group 9
9999: Do not calculate

p20283 LVM 1 run sequence / LVM 1 RunSeq

SERVO_S110-DP (FBLOCKS), SERVO_S110-CAN (FBLOCKS), SERVO_S110-PN (FBLOCKS)

Can be changed: T	**Calculated:** -	**Access level:** 1
Data type: Unsigned16	**Dyn. index:** -	**Func. diagram:** 7270
P-Group: -	**Unit group:** -	**Unit selection:** -
Not for motor type: -	**Scaling:** -	**Expert list:** 1
Min	**Max**	**Factory setting**
0	7999	730

Description: Setting parameter for the run sequence of instance LVM within the run-time group set in p20282.

Note: The function blocks with a lower run sequence value are calculated before function blocks with a higher run sequence value.

p20284 CI: DIF 0 input X / DIF 0 input X

SERVO_S110-DP (FBLOCKS), SERVO_S110-CAN (FBLOCKS), SERVO_S110-PN (FBLOCKS)

Can be changed: T	**Calculated:** -	**Access level:** 1
Data type: Unsigned32 / FloatingPoint32	**Dyn. index:** -	**Func. diagram:** 7264
P-Group: -	**Unit group:** -	**Unit selection:** -
Not for motor type: -	**Scaling:** PERCENT	**Expert list:** 1
Min	**Max**	**Factory setting**
-	-	0

Description: Sets the signal source of input quantity X of instance DIF 0 of the differentiating element.

p20285 DIF 0 differentiating time constant in ms / DIF 0 T_diff ms

SERVO_S110-DP (FBLOCKS), SERVO_S110-CAN (FBLOCKS), SERVO_S110-PN (FBLOCKS)

Can be changed: T	**Calculated:** -	**Access level:** 1
Data type: FloatingPoint32	**Dyn. index:** -	**Func. diagram:** 7264
P-Group: -	**Unit group:** -	**Unit selection:** -
Not for motor type: -	**Scaling:** -	**Expert list:** 1
Min	**Max**	**Factory setting**
0.00	340.28235E36	0.00

Description: Sets the differentiating time constant Td in milliseconds of instance DIF 0 of the differentiating element.

r20286 CO: DIF 0 output Y / DIF 0 output Y

SERVO_S110-DP (FBLOCKS), SERVO_S110-CAN (FBLOCKS), SERVO_S110-PN (FBLOCKS)

Can be changed: -	**Calculated:** -	**Access level:** 1
Data type: FloatingPoint32	**Dyn. index:** -	**Func. diagram:** 7264
P-Group: -	**Unit group:** -	**Unit selection:** -
Not for motor type: -	**Scaling:** PERCENT	**Expert list:** 1
Min	**Max**	**Factory setting**
-	-	-

Description: Display parameter for output quantity Y of instance DIF 0 of the differentiating element.

p20287 DIF 0 run-time group / DIF 0 RTG

SERVO_S110-DP (FBLOCKS), SERVO_S110-CAN (FBLOCKS), SERVO_S110-PN (FBLOCKS)

Can be changed: T	**Calculated:** -	**Access level:** 1
Data type: Integer16	**Dyn. index:** -	**Func. diagram:** 7264
P-Group: -	**Unit group:** -	**Unit selection:** -
Not for motor type: -	**Scaling:** -	**Expert list:** 1
Min	**Max**	**Factory setting**
0	9999	9999

Description: Setting parameter for the run-time group in which instance DIF 0 of the differentiating element is to be called.

Value:
0: Run-time group 0
1: Run-time group 1
2: Run-time group 2
3: Run-time group 3
4: Run-time group 4
5: Run-time group 5
6: Run-time group 6
7: Run-time group 7
8: Run-time group 8
9: Run-time group 9
9999: Do not calculate

p20288 DIF 0 run sequence / DIF 0 RunSeq

SERVO_S110-DP (FBLOCKS), SERVO_S110-CAN (FBLOCKS), SERVO_S110-PN (FBLOCKS)

Can be changed: T	**Calculated:** -	**Access level:** 1
Data type: Unsigned16	**Dyn. index:** -	**Func. diagram:** 7264
P-Group: -	**Unit group:** -	**Unit selection:** -
Not for motor type: -	**Scaling:** -	**Expert list:** 1
Min	**Max**	**Factory setting**
0	32000	750

Description: Setting parameter for the run sequence of instance DIF 0 within the run-time group set in p20287.

Note: The function blocks with a lower run sequence value are calculated before function blocks with a higher run sequence value.

r61000[0...239] PROFINET Name of Station / PN Name of Station

CU_S110-PN	**Can be changed:** -	**Calculated:** -	**Access level:** 3
	Data type: Unsigned8	**Dyn. index:** -	**Func. diagram:** -
	P-Group: -	**Unit group:** -	**Unit selection:** -
	Not for motor type: -	**Scaling:** -	**Expert list:** 1
	Min	**Max**	**Factory setting**
	-	-	-

Description: Displays PROFINET Name of Station.

Notice: An ASCII table (excerpt) can be found, for example, in the appendix to the List Manual.

r61001[0...3] PROFINET IP of Station / PN IP of Station

CU_S110-PN	**Can be changed:** -	**Calculated:** -	**Access level:** 3
	Data type: Unsigned8	**Dyn. index:** -	**Func. diagram:** -
	P-Group: -	**Unit group:** -	**Unit selection:** -
	Not for motor type: -	**Scaling:** -	**Expert list:** 1
	Min	**Max**	**Factory setting**
	-	-	-

Description: Displays PROFINET IP of Station.

2.3 Parameters for data sets

2.3.1 Parameters for command data sets (CDS)

Note

References: /FH3/ SINAMICS S110 Function Manual
Chapter "Data Sets"

The following list contains the parameters that are dependent on the command data sets.

Product: S110, Version: 4403900, Language: eng, Type: CDS

p0820[0...n] BI: Drive Data Set selection DDS bit 0 / DDS select., bit 0
p0828[0...n] BI: Motor changeover feedback signal / Mot_chng fdbk sig
p0840[0...n] BI: ON / OFF (OFF1) / ON / OFF (OFF1)
p0844[0...n] BI: No coast-down / coast-down (OFF2) signal source 1 / OFF2 S_src 1
p0845[0...n] BI: No coast-down / coast-down (OFF2) signal source 2 / OFF2 S_src 2
p0848[0...n] BI: No Quick Stop / Quick Stop (OFF3) signal source 1 / OFF3 S_src 1
p0849[0...n] BI: No Quick Stop / Quick Stop (OFF3) signal source 2 / OFF3 S_src 2
p0852[0...n] BI: Enable operation/inhibit operation / Operation enable
p0854[0...n] BI: Control by PLC/no control by PLC / Master ctrl by PLC
p0855[0...n] BI: Unconditionally release holding brake / Uncond open brake
p0856[0...n] BI: Enable speed controller / n_ctrl enable
p0858[0...n] BI: Unconditionally close holding brake / Uncond close brake
p1020[0...n] BI: Fixed speed setpoint selection Bit 0 / n_set_fixed Bit 0
p1021[0...n] BI: Fixed speed setpoint selection Bit 1 / n_set_fixed Bit 1
p1022[0...n] BI: Fixed speed setpoint selection Bit 2 / n_set_fixed Bit 2
p1023[0...n] BI: Fixed speed setpoint selection Bit 3 / n_set_fixed Bit 3
p1035[0...n] BI: Motorized potentiometer setpoint raise / Mop raise
p1036[0...n] BI: Motorized potentiometer lower setpoint / Mop lower
p1039[0...n] BI: Motorized potentiometer inversion / MotP inv
p1041[0...n] BI: Motorized potentiometer manual/automatic / Mop manual/auto
p1042[0...n] CI: Motorized potentiometer automatic setpoint / Mop auto setpoint
p1043[0...n] BI: Motorized potentiometer accept setting value / MotP acc set val
p1044[0...n] CI: Motorized potentiometer setting value / Mop set val
p1051[0...n] CI: Speed limit RFG positive direction of rotation / n_limit RFG pos
p1052[0...n] CI: Speed limit RFG negative direction of rotation / n_limit RFG neg
p1055[0...n] BI: Jog bit 0 / Jog bit 0
p1056[0...n] BI: Jog bit 1 / Jog bit 1
p1070[0...n] CI: Main setpoint / Main setpoint
p1071[0...n] CI: Main setpoint scaling / Main setp scal
p1075[0...n] CI: Supplementary setpoint / Suppl setp
p1076[0...n] CI: Supplementary setpoint scaling / Suppl setp scal
p1085[0...n] CI: Speed limit in positive direction of rotation / n_limit pos
p1088[0...n] CI: Speed limit in negative direction of rotation / n_limit neg
p1110[0...n] BI: Inhibit negative direction / Inhib neg dir
p1111[0...n] BI: Inhibit positive direction / Inhib pos dir
p1113[0...n] BI: Setpoint inversion / Setp inv
p1122[0...n] BI: Bypass ramp-function generator / Bypass RFG
p1140[0...n] BI: Enable ramp-function generator/inhibit ramp-function generator / RFG enable
p1141[0...n] BI: Continue ramp-function generator/freeze ramp-function generator / Continue RFG
p1142[0...n] BI: Enable setpoint/inhibit setpoint / Setpoint enable
p1143[0...n] BI: Ramp-function generator, accept setting value / RFG accept set v

p1144[0...n] CI: Ramp-function generator setting value / RFG setting value
p1155[0...n] CI: Speed controller speed setpoint 1 / n_ctrl n_set 1
p1160[0...n] CI: Speed controller speed setpoint 2 / n_ctrl n_set 2
p1230[0...n] BI: Armature short-circuit / DC braking activation / ASC/DCBRK act
p1235[0...n] BI: External armature short-circuit contactor feedback signal / ASC ext feedback
p1430[0...n] CI: Speed precontrol / n_prectrl
p1455[0...n] CI: Speed controller P gain adaptation signal / n_ctr adapt_sig Kp
p1466[0...n] CI: Speed controller P-gain scaling / n_ctrl Kp scal
p1476[0...n] BI: Speed controller hold integrator / n_ctrl integ stop
p1477[0...n] BI: Speed controller set integrator value / n_ctrl integ set
p1478[0...n] CI: Speed controller integrator setting value / n_ctr integ_setVal
p1497[0...n] CI: Moment of inertia scaling / M_mom inert scal
p1501[0...n] BI: Change over between closed-loop speed/torque control / Changeov n/M_ctrl
p1502[0...n] BI: Freeze moment of inertia estimator / J_estim freeze
p1511[0...n] CI: Supplementary torque 1 / M_suppl 1
p1512[0...n] CI: Supplementary torque 1 scaling / M_suppl 1 scal
p1513[0...n] CI: Supplementary torque 2 / M_suppl 2
p1522[0...n] CI: Torque limit upper/motoring / M_max upper/mot
p1523[0...n] CI: Torque limit lower/regenerative / M_max lower/regen
p1528[0...n] CI: Torque limit upper/motoring scaling / M_max up/mot scal
p1529[0...n] CI: Torque limit lower/regenerative scaling / M_max low/gen scal
p1542[0...n] CI: Travel to fixed stop torque reduction / TfS M_red
p1545[0...n] BI: Activates travel to a fixed stop / TfS activation
p1550[0...n] BI: Transfer actual torque as torque offset / Accept act torque
p1551[0...n] BI: Torque limit variable/fixed signal source / M_lim var/fixS_src
p1552[0...n] CI: Torque limit upper scaling without offset / M_max up w/o offs
p1554[0...n] CI: Torque limit lower scaling without offset / M_max low w/o offs
p1569[0...n] CI: Supplementary torque 3 / M_suppl 3
p2103[0...n] BI: 1. Acknowledge faults / 1. Acknowledge
p2104[0...n] BI: 2. Acknowledge faults / 2. Acknowledge
p2105[0...n] BI: 3. Acknowledge faults / 3. Acknowledge
p2106[0...n] BI: External fault 1 / External fault 1
p2107[0...n] BI: External fault 2 / External fault 2
p2108[0...n] BI: External fault 3 / External fault 3
p2112[0...n] BI: External alarm 1 / External alarm 1
p2116[0...n] BI: External alarm 2 / External alarm 2
p2117[0...n] BI: External alarm 3 / External alarm 3
p2144[0...n] BI: Motor stall monitoring enable (negated) / Mot stall enab neg
p2148[0...n] BI: RFG active / RFG active
p2151[0...n] CI: Speed setpoint for messages/signals / n_set for msg
p2154[0...n] CI: Speed setpoint 2 / n_set 2
p2200[0...n] BI: Technology controller enable / Tec_ctrl enable
p2220[0...n] BI: Technology controller fixed value selection bit 0 / Tec_ctrl sel bit 0
p2221[0...n] BI: Technology controller fixed value selection bit 1 / Tec_ctrl sel bit 1
p2222[0...n] BI: Technology controller fixed value selection bit 2 / Tec_ctrl sel bit 2
p2223[0...n] BI: Technology controller fixed value selection bit 3 / Tec_ctrl sel bit 3
p2235[0...n] BI: Technology controller motorized potentiometer raise setpoint / Tec_ctrl mop raise
p2236[0...n] BI: Technology controller motorized potentiometer lower setpoint / Tec_ctrl mop lower
p2253[0...n] CI: Technology controller setpoint 1 / Tec_ctrl setp 1
p2254[0...n] CI: Technology controller setpoint 2 / Tec_ctrl setp 2
p2264[0...n] CI: Technology controller actual value / Tec_ctrl act val
p2286[0...n] BI: Hold technology controller integrator / Tec_ctr integ stop
p2289[0...n] CI: Technology controller pre-control signal / Tec_ctrl prectrl
p2296[0...n] CI: Technology controller output scaling / Tec_ctrl outp scal
p2297[0...n] CI: Technology controller maximum limit signal source / Tec_ctrMaxLimS_src

p2298[0...n] CI: Technology controller minimum limit signal source / Tec_ctrl min_l s_s
p2299[0...n] CI: Technology controller limit offset / Tech_ctrl lim offs

2.3.2 Parameters for drive data sets (DDS)

Note

References: /FH3/ SINAMICS S110 Function Manual
Chapter "Data Sets"

The following list contains the parameters that are dependent on the drive data sets.

Product: S110, Version: 4403900, Language: eng, Type: DDS

p0186[0...n] Motor Data Sets (MDS) number / MDS number
p0187[0...n] Encoder 1 encoder data set number / Enc 1 EDS number
p0188[0...n] Encoder 2 encoder data set number / Enc 2 EDS number
p0340[0...n] Automatic calculation motor/control parameters / Calc auto par
p0572[0...n] Activate inhibit list / Act inhib list
p0578[0...n] Calculate technology-dependent parameters / Calc tec par
p0640[0...n] Current limit / Current limit
p0642[0...n] Encoderless operation current reduction / Encoderl op I_red
p1001[0...n] CO: Fixed speed setpoint 1 / n_set_fixed 1
p1002[0...n] CO: Fixed speed setpoint 2 / n_set_fixed 2
p1003[0...n] CO: Fixed speed setpoint 3 / n_set_fixed 3
p1004[0...n] CO: Fixed speed setpoint 4 / n_set_fixed 4
p1005[0...n] CO: Fixed speed setpoint 5 / n_set_fixed 5
p1006[0...n] CO: Fixed speed setpoint 6 / n_set_fixed 6
p1007[0...n] CO: Fixed speed setpoint 7 / n_set_fixed 7
p1008[0...n] CO: Fixed speed setpoint 8 / n_set_fixed 8
p1009[0...n] CO: Fixed speed setpoint 9 / n_set_fixed 9
p1010[0...n] CO: Fixed speed setpoint 10 / n_set_fixed 10
p1011[0...n] CO: Fixed speed setpoint 11 / n_set_fixed 11
p1012[0...n] CO: Fixed speed setpoint 12 / n_set_fixed 12
p1013[0...n] CO: Fixed speed setpoint 13 / n_set_fixed 13
p1014[0...n] CO: Fixed speed setpoint 14 / n_set_fixed 14
p1015[0...n] CO: Fixed speed setpoint 15 / n_set_fixed 15
p1030[0...n] Motorized potentiometer configuration / Mop configuration
p1037[0...n] Motorized potentiometer maximum speed / MotP n_max
p1038[0...n] Motorized potentiometer minimum speed / MotP n_min
p1040[0...n] Motorized potentiometer starting value / Mop start value
p1047[0...n] Motorized potentiometer ramp-up time / Mop ramp-up time
p1048[0...n] Motorized potentiometer ramp-down time / Mop ramp-down time
p1058[0...n] Jog 1 speed setpoint / Jog 1 n_set
p1059[0...n] Jog 2 speed setpoint / Jog 2 n_set
p1063[0...n] Speed limit setpoint channel / n_limit setp
p1080[0...n] Minimum speed / n_min
p1082[0...n] Maximum speed / n_max
p1083[0...n] CO: Speed limit in positive direction of rotation / n_limit pos
p1086[0...n] CO: Speed limit in negative direction of rotation / n_limit neg
p1091[0...n] Skip speed 1 / n_skip 1
p1092[0...n] Skip speed 2 / n_skip 2
p1093[0...n] Skip speed 3 / n_skip 3
p1094[0...n] Skip speed 4 / n_skip 4
p1101[0...n] Skip speed bandwidth / n_skip bandwidth

p1120[0...n] Ramp-function generator ramp-up time / RFG ramp-up time
p1121[0...n] Ramp-function generator ramp-down time / RFG ramp-down time
p1130[0...n] Ramp-function generator initial rounding-off time / RFG t_start_round
p1131[0...n] Ramp-function generator final rounding-off time / RFG t_end_delay
p1134[0...n] Ramp-function generator rounding-off type / RFG round-off type
p1135[0...n] OFF3 ramp-down time / OFF3 t_RD
p1136[0...n] OFF3 initial rounding-off time / RFGOFF3 t_strt_rnd
p1137[0...n] OFF3 final rounding-off time / RFG OFF3 t_end_del
p1145[0...n] Ramp-function generator tracking intensity. / RFG track intens
p1148[0...n] Ramp-function gen. tolerance for ramp-up and ramp-down active / RFG tol HL/RL act
p1151[0...n] Ramp-function generator configuration / RFG config
p1189[0...n] Speed setpoint configuration / n_ctrl config
p1192[0...n] DSC enc selection / DSC enc selection
p1193[0...n] DSC encoder adaptation factor / DSC encodAdaptFact
p1226[0...n] Threshold for zero speed detection / n_standst n_thresh
p1240[0...n] Vdc controller or Vdc monitoring configuration / Vdc_ctrl config
p1244[0...n] DC link voltage threshold upper / Vdc upper thresh
p1248[0...n] DC link voltage threshold lower / Vdc lower thresh
p1250[0...n] Vdc controller proportional gain / Vdc_ctrl Kp
p1300[0...n] Open-loop/closed-loop control operating mode / Op/cl-lp ctrl_mode
p1317[0...n] U/f control activation / Uf act
p1318[0...n] U/f control ramp-up/ramp-down time / Uf t_rmp-up_rmp-dn
p1319[0...n] U/f control voltage at zero frequency / Uf U at f=0 Hz
p1326[0...n] U/f control characteristic frequency / Uf char f4
p1327[0...n] U/f control characteristic voltage / Uf char U4
p1338[0...n] U/f mode resonance damping gain / Uf Res_damp gain
p1339[0...n] U/f mode resonance damping filter time constant / Uf Res_damp T
p1345[0...n] DC braking proportional gain / DCBRK Kp
p1346[0...n] DC braking integral time / DCBRK Tn
p1349[0...n] U/f mode resonance damping maximum frequency / Uf res_damp f_max
p1400[0...n] Speed control configuration / n_ctrl config
p1402[0...n] Closed-loop current control and motor model configuration / I_ctrl config
p1404[0...n] Encoderless operation changeover speed / Encoderl op n_chg
p1414[0...n] Speed setpoint filter activation / n_set_filt act
p1415[0...n] Speed setpoint filter 1 type / n_set_filt 1 type
p1416[0...n] Speed setpoint filter 1 time constant / n_set_filt 1 T
p1417[0...n] Speed setpoint filter 1 denominator natural frequency / n_set_filt 1 fn_d
p1418[0...n] Speed setpoint filter 1 denominator damping / n_set_filt 1 D_d
p1419[0...n] Speed setpoint filter 1 numerator natural frequency / n_set_filt 1 fn_n
p1420[0...n] Speed setpoint filter 1 numerator damping / n_set_filt 1 D_n
p1428[0...n] Speed pre-control balancing dead time / n_prectrBal t_dead
p1429[0...n] Speed pre-control balancing time constant / n_prectr bal T
p1433[0...n] Speed controller reference model natural frequency / n_ctrl RefMod fn
p1434[0...n] Speed controller reference model damping / n_ctrl RefMod D
p1435[0...n] Speed controller reference model dead time / n_ctrRefMod t_dead
p1441[0...n] Actual speed smoothing time / n_act T_smooth
p1451[0...n] Speed actual value smoothing time sensorless / n_act t_sm SL
p1456[0...n] Speed controller P gain adaptation lower starting point / n_ctrl AdaptKpLow
p1457[0...n] Speed controller P gain adaptation upper starting point / n_ctrl AdaptKp up
p1458[0...n] Adaptation factor lower / Adapt_factor lower
p1459[0...n] Adaptation factor upper / Adapt_factor upper
p1460[0...n] Speed controller P gain adaptation speed lower / n_ctrl Kp n lower
p1461[0...n] Speed controller Kp adaptation speed upper scaling / n_ctrl Kp n upper
p1462[0...n] Speed controller integral time adaptation speed lower / n_ctrl Tn n lower
p1463[0...n] Speed controller Tn adaptation speed upper scaling / n_ctrl Tn n upper

p1464[0...n] Speed controller adaptation speed lower / n_ctrl n lower
p1465[0...n] Speed controller adaptation speed upper / n_ctrl n upper
p1470[0...n] Speed controller encoderless operation P-gain / n_ctrl SLVC Kp
p1472[0...n] Speed controller encoderless operation integral time / n_ctrl SLVC Tn
p1494[0...n] Speed controller integrator feedback time constant / n_ctr integ_fdbk T
p1498[0...n] Load moment of inertia / Load mom of inert
p1517[0...n] Accelerating torque smoothing time constant / M_accel T_smooth
p1520[0...n] CO: Torque limit upper/motoring / M_max upper/mot
p1521[0...n] CO: Torque limit lower/regenerative / M_max lower/regen
p1524[0...n] CO: Torque limit upper/motoring scaling / M_max up/mot scal
p1525[0...n] CO: Torque limit lower/regenerative scaling / M_max low/gen scal
p1530[0...n] Power limit motoring / P_max mot
p1531[0...n] Power limit regenerative / P_max gen
p1532[0...n] CO: Torque limit offset / M_max offset
p1578[0...n] Flux reduction flux decrease smoothing time / Flux red dec t_sm
p1579[0...n] Flux reduction flux build-up smoothing time / Flux red up t_sm
p1581[0...n] Flux reduction factor / Flux red factor
p1585[0...n] Flux actual value smoothing time / Flux actVal T_smth
p1590[0...n] Flux controller P gain / Flux controller Kp
p1592[0...n] Flux controller integral time / Flux controller Tn
p1612[0...n] Current setpoint open-loop control, encoderless / I_setCtrEncoderl
p1656[0...n] Activates current setpoint filter / I_setp_filt act
p1657[0...n] Current setpoint filter 1 type / I_set_filt 1 type
p1658[0...n] Current setpoint filter 1 denominator natural frequency / I_set_filt 1 fn_d
p1659[0...n] Current setpoint filter 1 denominator damping / I_set_filt 1 D_d
p1660[0...n] Current setpoint filter 1 numerator natural frequency / I_set_filt 1 fn_n
p1661[0...n] Current setpoint filter 1 numerator damping / I_set_filt 1 D_n
p1662[0...n] Current setpoint filter 2 type / I_set_filt 2 type
p1663[0...n] Current setpoint filter 2 denominator natural frequency / I_set_filt 2 fn_d
p1664[0...n] Current setpoint filter 2 denominator damping / I_set_filt 2 D_d
p1665[0...n] Current setpoint filter 2 numerator natural frequency / I_set_filt 2 fn_n
p1666[0...n] Current setpoint filter 2 numerator damping / I_set_filt 2 D_n
p1701[0...n] Current controller reference model dead time / I_ctrRefMod t_dead
p1715[0...n] Current controller P gain / I_ctrl Kp
p1717[0...n] Current controller integral-action time / I_ctrl Tn
p1752[0...n] Motor model changeover speed operation with encoder / MotMod n_chgov enc
p1755[0...n] Motor model changeover speed encoderless operation / MotMod n_chgSnsorl
p1800[0...n] Pulse frequency setpoint / Pulse freq setp
p1821[0...n] Dir of rot / Dir of rot
p2140[0...n] Hysteresis speed 2 / n_hysteresis 2
p2141[0...n] Speed threshold 1 / n_thresh val 1
p2142[0...n] Hysteresis speed 1 / n_hysteresis 1
p2149[0...n] Monitoring configuration / Monit config
p2150[0...n] Hysteresis speed 3 / n_hysteresis 3
p2153[0...n] Speed actual value filter time constant / n_act_filt T
p2155[0...n] Speed threshold 2 / n_thresh val 2
p2156[0...n] On delay comparison value reached / t_on cmpr val rchd
p2161[0...n] Speed threshold 3 / n_thresh val 3
p2162[0...n] Hysteresis speed n_act > n_max / Hyst n_act>n_max
p2163[0...n] Speed threshold 4 / n_thresh val 4
p2164[0...n] Hysteresis speed 4 / n_hysteresis 4
p2166[0...n] Off delay n_act = n_set / t_del_off n_i=n_so
p2167[0...n] Switch-on delay n_act = n_set / t_on n_act=n_set
p2174[0...n] Torque threshold value 1 / M_thresh val 1
p2175[0...n] Motor blocked speed threshold / Mot lock n_thresh

p2177[0...n] Motor blocked delay time / Mot lock t_del
p2181[0...n] Load monitoring response / Load monit resp
p2182[0...n] Load monitoring speed threshold value 1 / n_thresh 1
p2183[0...n] Load monitoring speed threshold value 2 / n_thresh 2
p2184[0...n] Load monitoring speed threshold value 3 / n_thresh 3
p2185[0...n] Load monitoring torque threshold 1 upper / M_thresh 1 upper
p2186[0...n] Load monitoring torque threshold 1 lower / M_thresh 1 lower
p2187[0...n] Load monitoring torque threshold 2 upper / M_thresh 2 upper
p2188[0...n] Load monitoring torque threshold 2 lower / M_thresh 2 lower
p2189[0...n] Load monitoring torque threshold 3 upper / M_thresh 3 upper
p2190[0...n] Load monitoring torque threshold 3 lower / M_thresh 3 lower
p2192[0...n] Load monitoring delay time / Load monit t_del
p2194[0...n] Torque threshold value 2 / M_thresh val 2
p2195[0...n] Torque utilization switch-off delay / M_util t_off
p2196[0...n] Torque utilization scaling / M_util scal
p2201[0...n] CO: Technology controller fixed value 1 / Tec_ctrl fix val1
p2202[0...n] CO: Technology controller fixed value 2 / Tec_ctr fix val 2
p2203[0...n] CO: Technology controller fixed value 3 / Tec_ctr fix val 3
p2204[0...n] CO: Technology controller fixed value 4 / Tec_ctr fix val 4
p2205[0...n] CO: Technology controller fixed value 5 / Tec_ctr fix val 5
p2206[0...n] CO: Technology controller fixed value 6 / Tec_ctr fix val 6
p2207[0...n] CO: Technology controller fixed value 7 / Tec_ctr fix val 7
p2208[0...n] CO: Technology controller fixed value 8 / Tec_ctr fix val 8
p2209[0...n] CO: Technology controller fixed value 9 / Tec_ctr fix val 9
p2210[0...n] CO: Technology controller fixed value 10 / Tec_ctr fix val 10
p2211[0...n] CO: Technology controller fixed value 11 / Tec_ctr fix val 11
p2212[0...n] CO: Technology controller fixed value 12 / Tec_ctr fix val 12
p2213[0...n] CO: Technology controller fixed value 13 / Tec_ctr fix val 13
p2214[0...n] CO: Technology controller fixed value 14 / Tec_ctr fix val 14
p2215[0...n] CO: Technology controller fixed value 15 / Tec_ctr fix val 15
p2216[0...n] Technology controller fixed value selection method / Tec_ctr FixVal sel
p2230[0...n] Technology controller motorized potentiometer configuration / Tec_ctr mop config
p2237[0...n] Technology controller motorized potentiometer maximum value / Tec_ctrl mop max
p2238[0...n] Technology controller motorized potentiometer minimum value / Tec_ctrl mop min
p2240[0...n] Technology controller motorized potentiometer starting value / Tec_ctrl mop start
p2247[0...n] Technology controller motorized potentiometer ramp-up time / Tec_ctr mop t_r-up
p2248[0...n] Technology controller motorized potentiometer ramp-down time / Tec_ctrMop t_rdown
p2502[0...n] LR encoder assignment / Encoder assignment
p2503[0...n] LR length unit LU per 10 mm / LU per 10 mm
p2504[0...n] LR motor/load motor revolutions / Mot/load motor rev
p2505[0...n] LR motor/load load revolutions / Mot/load load rev
p2506[0...n] LR length unit LU per load revolution / LU per load rev
p2519[0...n] LR position actual value preprocessing config. DDS changeover / s_act config DDS
p2533[0...n] LR position setpoint filter time constant / s_set_filt T
p2534[0...n] LR speed pre-control factor / n_prectrl fact
p2535[0...n] LR speed pre-control balancing filter dead time / n_prectrFlt t_dead
p2536[0...n] LR speed pre-control symmetrizing filter PT1 / n_prectrl filt PT1
p2538[0...n] LR proportional gain / Kp
p2539[0...n] LR integral time / Tn
p2546[0...n] LR dynamic following error monitoring tolerance / s_delta_monit tol
p2567[0...n] LR torque pre-control moment of inertia / M_prectr M_inertia
p2634[0...n] EPOS fixed stop maximum following error / Following err max
p2720[0...n] Load gear configuration / Load gear config
p2721[0...n] Load gear rotary absolute encoder revolutions virtual / Abs rot rev
p2722[0...n] Load gear position tracking tolerance window / Pos track tol

r2723[0...n] CO: Load gear absolute value / Load gear abs_val
r2724[0...n] CO: Load gear position difference / Load gear pos diff
p2900[0...n] CO: Fixed value 1 [%] / Fixed value 1 [%]
p2901[0...n] CO: Fixed value 2 [%] / Fixed value 2 [%]
p2930[0...n] CO: Fixed value M [Nm] / Fixed value M [Nm]
p3233[0...n] Torque actual value filter time constant / M_act_filt T
r3925[0...n] Identification final display / Ident final_disp
r3927[0...n] Motor data identification induction motor data determined / MotID ASM dat det
r3928[0...n] Motor data identification synchronous motor data determined / MotId PEM dat det
r3998[0...n] First drive commissioning / First drv_comm

2.3.3 Parameters for encoder data sets (EDS)

Note

References: /FH3/ SINAMICS S110 Function Manual
Chapter "Data Sets"

The following list contains the parameters that are dependent on the encoder data sets.

Product: S110, Version: 4403900, Language: eng, Type: EDS
p0141[0...n] Encoder interface (Sensor Module) component number / Enc_interf comp_no
p0142[0...n] Encoder component number / Encoder comp_no
p0144[0...n] Sensor Module detection via LED / SM detection LED
p0145[0...n] Activate/de-activate encoder interface / Enc_intf act/deact
r0146[0...n] Encoder interface active/inactive / Enc_intf act/inact
r0147[0...n] Sensor Module EEPROM data version / SM EEPROM version
r0148[0...n] Sensor Module firmware version / SM FW version
p0400[0...n] Encoder type selection / Enc_typ sel
p0401[0...n] Encoder type OEM selection / Enc type OEM sel
p0404[0...n] Encoder configuration effective / Enc_config eff
p0405[0...n] Square-wave encoder track A/B / Sq-wave enc A/B
p0408[0...n] Rotary encoder pulse number / Rot enc pulse No.
p0410[0...n] Encoder inversion actual value / Enc inv act value
p0414[0...n] Redundant coarse position value relevant bits (identified) / Relevant bits
p0415[0...n] Gx_XIST1 Coarse position safe most significant bit (identified) / Gx_XIST1 safe MSB
p0418[0...n] Fine resolution Gx_XIST1 (in bits) / Enc fine Gx_XIST1
p0419[0...n] Fine resolution absolute value Gx_XIST2 (in bits) / Enc fine Gx_XIST2
p0421[0...n] Absolute encoder rotary multiturn resolution / Enc abs multiturn
p0423[0...n] Absolute encoder rotary singleturn resolution / Enc abs singleturn
p0425[0...n] Encoder rotary zero mark distance / Enc rot dist ZM
p0426[0...n] Encoder zero mark differential distance / Enc ZM Dif_dist
p0427[0...n] Encoder SSI baud rate / Enc SSI baud rate
p0428[0...n] Encoder SSI monoflop time / Enc SSI t_monoflop
p0429[0...n] Encoder SSI configuration / Enc SSI config
p0430[0...n] Sensor Module configuration / SM config
p0431[0...n] Angular commutation offset / Ang_com offset
p0432[0...n] Gearbox factor encoder revolutions / Grbx_fact enc_rev
p0433[0...n] Gearbox factor motor/load revolutions / Grbx_fact mot_rev
p0434[0...n] Encoder SSI error bit / Enc SSI error bit
p0435[0...n] Encoder SSI alarm bit / Enc SSI alarm bit
p0436[0...n] Encoder SSI parity bit / Enc SSI parity bit
p0437[0...n] Sensor Module configuration extended / SM config ext
p0438[0...n] Squarewave encoder filter time / Enc t_filt

p0439[0...n] Encoder ramp-up time / Enc ramp-up time
p0440[0...n] Copy encoder serial number / Copy enc ser_no
p0441[0...n] Encoder commissioning serial number part 1 / Enc comm ser_no 1
p0442[0...n] Encoder commissioning serial number part 2 / Enc comm ser_no 2
p0443[0...n] Encoder commissioning serial number part 3 / Enc comm ser_no 3
p0444[0...n] Encoder commissioning serial number part 4 / Enc comm ser_no 4
p0445[0...n] Encoder commissioning serial number part 5 / Enc comm ser_no 5
p0446[0...n] Encoder SSI number of bits before the absolute value / Enc SSI bit before
p0447[0...n] Encoder SSI number of bits absolute value / Enc SSI bit val
p0448[0...n] Encoder SSI number of bits after the absolute value / Enc SSI bit after
p0449[0...n] Encoder SSI number of bits filler bits / Enc SSI fill bits
p0453[0...n] Pulse encoder evaluation zero speed measuring time / Enc_ev n_0 t_meas
p0493[0...n] Zero mark selection input terminal / ZM_sel inp_term
p0494[0...n] Equivalent zero mark input terminal / ZM_equiv input
p2507[0...n] LR absolute encoder adjustment status / Abs_enc_adj stat
p2525[0...n] CO: LR encoder adjustment offset / Enc_adj offset
p4662[0...n] Encoder characteristic type / Enc char_type
p4663[0...n] Encoder characteristic K0 / Enc char K0
p4664[0...n] Encoder characteristic K1 / Enc char K1
p4665[0...n] Encoder characteristic K2 / Enc char K2
p4666[0...n] Encoder characteristic K3 / Enc char K3
p4670[0...n] Analog sensor configuration / Ana_sens config
p4671[0...n] Analog sensor input / Ana_sens inp
p4672[0...n] Analog sensor channel A voltage at actual value zero / Ana_sens A U at 0
p4673[0...n] Analog sensor channel A voltage per encoder period / Ana_sens A U/per
p4674[0...n] Analog sensor channel B voltage at actual value zero / Ana_sens B U at 0
p4675[0...n] Analog sensor channel B voltage per encoder period / Ana_sens B U/per
p4676[0...n] Analog sensor range limit threshold / Ana_sens lim thr
p4677[0...n] Analog sensor LVDT configuration / Ana_sens LVDT conf
p4678[0...n] Analog sensor LVDT ratio / An_sens LVDT ratio
p4679[0...n] Analog sensor LVDT phase / An_sens LVDT ph
p4680[0...n] Zero mark monitoring tolerance permissible / ZM_monit tol perm
p4681[0...n] Zero mark monitoring tolerance window limit 1 positive / ZM tol lim 1 pos
p4682[0...n] Zero mark monitoring tolerance window limit 1 negative / ZM tol lim 1 neg
p4683[0...n] Zero mark monitoring tolerance window alarm threshold positive / ZM tol A_thr pos
p4684[0...n] Zero mark monitoring tolerance window alarm threshold negative / ZM tol A_thr neg
p4685[0...n] Speed actual value mean value generation / n_act mean val
p4686[0...n] Zero mark minimum length / ZM min length

2.3.4 Parameters for motor data sets (MDS)

Note

References: /FH3/ SINAMICS S110 Function Manual
Chapter "Data Sets"

The following list contains the parameters that are dependent on the motor data sets.

Product: S110, Version: 4403900, Language: eng, Type: MDS
p0131[0...n] Motor component number / Mot comp_no
p0300[0...n] Motor type selection / Mot type sel
p0301[0...n] Motor code number selection / Mot code No. sel
r0302[0...n] Motor code number of motor with DRIVE-CLiQ / Motor code Mot DLQ
r0303[0...n] Motor with DRIVE-CLiQ status word / Motor w DLQ ZSW

p0304[0...n] Rated motor voltage / Mot U_rated
p0305[0...n] Rated motor current / Mot I_rated
p0307[0...n] Rated motor power / Mot P_rated
p0308[0...n] Rated motor power factor / Mot cos_phi_rated
p0310[0...n] Rated motor frequency / Mot f_rated
p0311[0...n] Rated motor speed / Mot n_rated
p0312[0...n] Rated motor torque / Mot M_rated
r0313[0...n] Motor pole pair number, actual (or calculated) / Mot PolePairNo act
p0314[0...n] Motor pole pair number / Mot pole pair No.
p0316[0...n] Motor torque constant / Mot kT
p0318[0...n] Motor stall current / Mot I_standstill
p0319[0...n] Motor stall torque / Mot M_standstill
p0320[0...n] Motor rated magnetizing current/short-circuit current / Mot I_mag_rated
p0322[0...n] Maximum motor speed / Mot n_max
p0323[0...n] Maximum motor current / Mot I_max
p0324[0...n] Winding maximum speed / Winding n_max
p0325[0...n] Motor pole position identification current 1st phase / Mot PolID I 1st ph
p0326[0...n] Motor stall torque correction factor / Mot M_stall_corr
p0327[0...n] Optimum motor load angle / Mot phi_load opt
p0328[0...n] Motor reluctance torque constant / Mot kT_reluctance
p0329[0...n] Motor pole position identification current / Mot PolID current
r0330[0...n] Rated motor slip / Mot slip_rated
r0331[0...n] Actual motor magnetizing current/short-circuit current / Mot I_mag_rtd act
r0332[0...n] Rated motor power factor / Mot cos_phi_rated
r0333[0...n] Rated motor torque / Mot M_rated
r0334[0...n] Actual motor-torque constant / Mot kT act
p0335[0...n] Motor cooling type / Motor cooling type
r0336[0...n] Actual rated motor frequency / Mot f_rated act
r0337[0...n] Rated motor EMF / Mot EMF_rated
p0338[0...n] Motor limit current / Mot I_limit
r0339[0...n] Rated motor voltage / Mot U_rated
p0341[0...n] Motor moment of inertia / Mot M_mom of inert
p0342[0...n] Ratio between the total and motor moment of inertia / Mot MomInert Ratio
p0344[0...n] Motor weight (for the thermal motor model) / Mot weight th mod
p0347[0...n] Motor de-excitation time / Mot t_de-excitat
p0348[0...n] Speed at the start of field weakening Vdc = 600 V / Mot n_field weaken
p0350[0...n] Motor stator resistance cold / Mot R_stator cold
p0352[0...n] Cable resistance / Mot R_cable cold
p0353[0...n] Motor series inductance / Mot L_series
p0354[0...n] Motor rotor resistance cold / damping resistance d axis / Mot R_r cold/R_D d
p0356[0...n] Motor stator leakage inductance / Mot L_stator leak.
p0358[0...n] Motor rotor leakage inductance / damping inductance d axis / Mot L_r leak / LDd
p0360[0...n] Motor magnetizing inductance/magn. inductance d axis saturated / Mot Lh/Lh d sat
r0370[0...n] Motor stator resistance cold / Mot R_stator cold
r0373[0...n] Motor rated stator resistance / Mot R_stator rated
r0374[0...n] Motor rotor resistance cold / damping resistance d axis / Mot R_r cold / RDd
r0376[0...n] Rated motor rotor resistance / Mot R_rotor rated
r0377[0...n] Motor leakage inductance total / Mot L_leak total
r0382[0...n] Motor magnetizing inductance transformed / Lh d axis saturated / Mot L_m tr/Lhd sat
r0384[0...n] Motor rotor time constant / damping time constant d axis / Mot T_rotor/T_Dd
r0386[0...n] Motor stator leakage time constant / Mot T_stator leak
p0391[0...n] Current controller adaptation starting point KP / I_adapt pt KP
p0392[0...n] Current controller adaptation starting point KP adapted / I_adapt pt KP adap
p0393[0...n] Current controller adaptation p gain adaptation / I_adapt Kp adapt
r0395[0...n] Actual stator resistance / R_stator act

r0396[0...n] Actual rotor resistance / R_rotor act
p0530[0...n] Bearing type selection / Bearing type sel
p0531[0...n] Bearing code number selection / Bear. code no sel
p0532[0...n] Bearing maximum speed / Bearing n_max
p0600[0...n] Motor temperature sensor for monitoring / Mot temp_sensor
p0601[0...n] Motor temperature sensor type / Mot_temp_sens type
p0604[0...n] Motor temperature alarm threshold / Mot_temp al thr
p0605[0...n] Motor temperature fault threshold / Mot_temp flt thr
p0606[0...n] Motor temperature timer / Mot_temp timer
p0607[0...n] Temperature sensor fault timer / Sensor fault time
p0611[0...n] I2t motor model thermal time constant / I2t mot_mod T
p0612[0...n] Thermal motor model configuration / Therm Mot_mod conf
p0615[0...n] I2t motor model fault threshold / I2t mot_mod thresh
p0616[0...n] Motor overtemperature alarm threshold 1 / Mot temp alarm 1
p0620[0...n] Thermal adaptation, stator and rotor resistance / Mot therm_adapt R
p0624[0...n] Motor temperature offset PT100 / Mot T_offset PT100
p0625[0...n] Motor ambient temperature / Mot T_ambient
p0626[0...n] Motor overtemperature, stator core / Mot T_over core
p0627[0...n] Motor overtemperature, stator winding / Mot T_over stator
p0628[0...n] Motor overtemperature rotor winding / Mot T_over rotor
r0630[0...n] Motor temperature model ambient temperature / MotTMod T_amb
r0631[0...n] Motor temperature model, stator core temperature / MotTMod T_core
r0632[0...n] Motor temperature model, stator winding temperature / MotTMod T_copper
r0633[0...n] Motor temperature model, rotor temperature / MotTMod T_rotor
p0643[0...n] Overvoltage protection for synchronous motors / Overvolt_protect
p0650[0...n] Actual motor operating hours / Mot t_oper act
p0651[0...n] Motor operating hours maintenance interval / Mot t_op maint
p0826[0...n] Motor changeover motor number / Mot_chng mot No.
p0827[0...n] Motor changeover status word bit number / Mot_chg ZSW bitNo.
p1231[0...n] Armature short-circuit / DC braking configuration / ASC/DCBRK config
p1232[0...n] DC braking braking current / DCBRK I_brake
p1233[0...n] DC braking time / DCBRK time
p1234[0...n] Speed at the start of DC braking / DCBRK n_start
p1236[0...n] Ext. armature short-cct. contactor feedback signal monit. time / ASC ext t_monit
p1237[0...n] External armature short-circuit delay time when opening / ASC ext t_wait
p1909[0...n] Motor data identification control word / MotID STW
p1958[0...n] Rotating measurement ramp-up/ramp-down time / Rot meas t_r up/dn
p1959[0...n] Rotating measurement configuration / Rot meas config
p1980[0...n] PolID technique / PolID technique
p1981[0...n] PolID distance max / PolID distance max
p1982[0...n] PolID selection / PolID selection
p1991[0...n] Motor changeover angular commutation correction / Ang_com corr
p1993[0...n] PolID motion-based current / PolID I mot_bas
p1994[0...n] PolID motion-based rise time / PolID T mot_bas
p1995[0...n] PolID motion-based gain / PolID kp mot_bas
p1996[0...n] PolID motion-based integral time / PolID Tn mot_bas
p1997[0...n] PolID motion-based smoothing time / PolID t_sm mot_bas
p3049[0...n] MotId Speed at start of field weakening identified / ident
p3050[0...n] MotorId stator resistance identified / R_stator ident
p3054[0...n] MotId rotor resistance identified / R_rotor ident
p3056[0...n] MotId stator leakage inductance identified / L_stator leak
p3058[0...n] MotId rotor leakage inductance identified / L_rotor leak
p3060[0...n] MotId magnetizing inductance identified / MotId Lh ident

2.3.5 Parameters for power unit data sets (PDS)

Note

References: /FH3/ SINAMICS S110 Function Manual
Chapter "Data Sets"

The following list contains the parameters that are dependent on the power unit data sets.

Product: S110, Version: 4403900, Language: eng, Type: PDS

p0121[0...n]	Power unit component number / PU comp_no
r0127[0...n]	Power unit version EPROM data / PU EPROM version
r0128[0...n]	Power unit firmware version / PU FW version
r0200[0...n]	Power unit code number actual / PU code no. act
p0201[0...n]	Power unit code number / PU code no
r0203[0...n]	Actual power unit type / PU actual type
r0204[0...n]	Power unit hardware properties / PU HW property
p0251[0...n]	Operating hours counter power unit fan / PU fan t_oper

Function diagrams

3

Content

3.1	Table of contents	710
3.2	Explanations on the function diagrams	717
3.3	Overviews	722
3.4	CU305 input/output terminals	732
3.5	PROFIdrive	740
3.6	Internal control/status words	777
3.7	Sequence control	790
3.8	Brake control	793
3.9	Safety Integrated	798
3.10	Setpoint channel	817
3.11	Setpoint channel not activated	826
3.12	Basic positioner (EPOS)	828
3.13	Position control	844
3.14	Encoder evaluation	849
3.15	Servo control	856
3.16	Technology functions	876
3.17	Free function blocks (FBLOCKS)	879
3.18	Technology controller	897
3.19	Signals and monitoring functions	902
3.20	Diagnostics	908
3.21	Data sets	914
3.22	CANopen interface	919
3.23	Basic Operator Panel 20 (BOP20)	926

3.1 Table of contents

3.2 Explanations on the function diagrams 717
1020 – Explanation of the symbols (part 1) 718
1021 – Explanation of the symbols (part 2) 719
1022 – Explanation of the symbols (part 3) 720
1030 – Handling BICO technology 721

3.3 Overviews 722
1510 – CU305 input/output terminals 723
1520 – PROFIdrive 724
1530 – Internal control/status words, data sets 725
1550 – Setpoint channel 726
1580 – Servo control, encoder evaluations (position, speed, temperature) 727
1590 – Servo control, speed control and U/f control 728
1610 – Servo control, generation of the torque limits 729
1630 – Servo control, current control 730
1750 – Monitoring functions, faults, alarms 731

3.4 CU305 input/output terminals 732
2020 – Digital inputs, electrically isolated (DI 0 ... DI 3) 733
2021 – Digital inputs, electrically isolated (DI 16 ... DI 19) 734
2022 – Digital inputs, electrically isolated (DI 20 ... DI 22) 735
2030 – Digital inputs/outputs, bidirectional (DI/DO 8 ... DI/DO 9) 736
2031 – Digital inputs/outputs, bidirectional (DI/DO 10 ... DI/DO 11) 737
2038 – Digital output (DO 16) 738
2040 – Analog input (AI) 739

3.5 PROFIdrive 740
2410 – PROFIBUS (PB) / PROFINET (PN), addresses and diagnostics 742
2420 – Standard telegrams and process data 743
2422 – Manufacturer-specific telegrams and process data 744
2424 – Manufacturer-specific/free telegrams and process data 745
2439 – PZD receive signals, interconnection profile-specific 746
2440 – PZD receive signals interconnection, manufacturer-specific 747
2442 – STW1 control word interconnection (p2038 = 0) 748
2443 – STW1 control word interconnection (p2038 = 1) 749
2444 – STW2 control word interconnection (p2038 = 0) 750

2445 – STW2 control word interconnection (p2038 = 1) 751
2449 – PZD send signals interconnection, profile-specific 752
2450 – PZD send signals interconnection, manufacturer-specific 753
2452 – ZSW1 status word interconnection (p2038 = 0) 754
2453 – ZSW1 status word interconnection (p2038 = 1) 755
2454 – ZSW2 status word interconnection (p2038 = 0) 756
2455 – ZSW2 status word interconnection (p2038 = 1) 757
2456 – MELDW status word interconnection 758
2462 – POS_STW positioning control word interconnection (r0108.4 = 1) 759
2463 – POS_STW1 positioning control word 1 interconnection (r0108.4 = 1) 760
2464 – POS_STW2 positioning control word 2 interconnection (r0108.4 = 1) 761
2466 – POS_ZSW1 positioning status word 1 interconnection (r0108.4 = 1) 762
2467 – POS_ZSW2 positioning status word 2 interconnection (r0108.4 = 1) 763
2468 – IF1 receive telegram, free interconnection via BICO (p0922 = 999) 764
2470 – IF1 send telegram, free interconnection via BICO (p0922 = 999) 765
2472 – IF1 status words, free interconnection 766
2475 – STW1 control word 1 interconnection (r0108.4 = 1) 767
2476 – SATZANW block selection interconnection (r0108.4 = 1) 768
2479 – ZSW1 status word 1 interconnection (r0108.4 = 1) 769
2480 – MDI_MOD-MDI mode interconnection (r0108.4 = 1) 770
2481 – IF1 receive telegram, free interconnection via BICO (p0922 = 999) 771
2483 – IF1 send telegram, free interconnection via BICO (p0922 = 999) 772
2495 – CU_STW1 control word, Control Unit interconnection 773
2496 – CU_ZSW1 status word, Control Unit interconnection 774
2497 – A_DIGITAL interconnection 775
2498 – E_DIGITAL interconnection 776

3.6 Internal control/status words 777
2501 – Control word, sequence control 778
2503 – Status word, sequence control 779
2505 – Control word, setpoint channel 780
2520 – Control word, speed controller 781
2522 – Status word, speed controller 782
2526 – Status word, closed-loop control 783
2530 – Status word, closed-loop current control 784
2534 – Status word, monitoring functions 1 785
2536 – Status word, monitoring functions 2 786

2537 – Status word, monitoring functions 3 787
2546 – Control word, faults/alarms 788
2548 – Status word, faults/alarms 1 and 2 789

3.7 Sequence control 790
2610 – Sequencer 791
2634 – Missing enable signals, line contactor control, logic operation 792

3.8 Brake control 793
2701 – Basic brake control (r0108.14 = 0) 794
2704 – Extended brake control, zero-speed detection (r0108.14 = 1) 795
2707 – Extended brake control, open/close brake (r0108.14 = 1) 796
2711 – Extended brake control, signal outputs (r0108.14 = 1) 797

3.9 Safety Integrated 798
2800 – Basic Functions, parameter manager 799
2802 – Basic Functions, monitoring functions and faults/alarms 800
2804 – Basic Functions, status words 801
2810 – Basic Functions, STO (Safe Torque Off), SS1 (Safe Stop 1) 802
2811 – Basic Functions, STO (Safe Torque Off), safe pulse cancellation 803
2814 – Basic Functions, SBC (Safe Brake Control) 804
2820 – Extended Functions, SLS (Safely-Limited Speed) 805
2825 – Extended Functions, SS1, SS2, SOS, internal STOP B, C, D, F 806
2840 – Extended Functions, control word and status word 807
2846 – Extended Functions, parameter manager 808
2850 – Extended Functions, fail-safe digital inputs (F-DI 0 ... F-DI 2) 809
2853 – Extended Functions, fail-safe digital output (F-DO 0) 810
2855 – Extended Functions, control interface 811
2856 – Extended Functions, Safe State selection 812
2857 – Extended Functions, assignment (F-DO 0) 813
2858 – Extended Functions, control via PROFIsafe (p9601.2 = p9601.3 = 1) 814
2860 – Extended Functions, SSM (Safe Speed Monitor) 815
2861 – Extended Functions, SDI (Safe Direction) 816

3.10 Setpoint channel 817
3010 – Fixed speed setpoints 818
3020 – Motorized potentiometer 819
3030 – Main/supplementary setpoint, setpoint scaling, jogging 820

3040 – Direction limitation and direction reversal . . . 821
3050 – Skip frequency bands and speed limitations . . . 822
3060 – Basic ramp-function generator . . . 823
3070 – Extended ramp-function generator . . . 824
3080 – Ramp-function generator selection, status word, tracking . . . 825

3.11 Setpoint channel not activated . . . 826
3095 – Generation of the speed limits (r0108.8 = 0) . . . 827

3.12 Basic positioner (EPOS) . . . 828
3610 – Jog mode (r0108.4 = 1) . . . 829
3612 – Referencing/reference point approach mode (r0108.4 = 1, p2597 = 0 signal) . . . 830
3614 – Flying referencing mode (r0108.4 = 1, p2597 = 1 signal) . . . 831
3615 – Traversing block mode, external block change (r0108.4 = 1) . . . 832
3616 – Traversing block mode (r0108.4 = 1) . . . 833
3617 – Travel to fixed stop (r0108.4 = 1) . . . 834
3618 – Direct setpoint input/MDI mode, dynamic values (r0108.4 = 1) . . . 835
3620 – Direct setpoint input/MDI mode (r0108.4 = 1) . . . 836
3625 – Mode control (r0108.4 = 1) . . . 837
3630 – Traversing range limits (r0108.4 = 1) . . . 838
3635 – Interpolator (r0108.4 = 1) . . . 839
3640 – Control word, block selection/MDI selection (r0108.4 = 1) . . . 840
3645 – Status word 1 (r0108.3 = 1, r0108.4 = 1) . . . 841
3646 – Status word 2 (r0108.3 = 1, r0108.4 = 1) . . . 842
3650 – Status word, active traversing block/MDI active (r0108.4 = 1) . . . 843

3.13 Position control . . . 844
4010 – Position actual value preprocessing (r0108.3 = 1) . . . 845
4015 – Position controller (r0108.3 = 1) . . . 846
4020 – Standstill/positioning monitoring (r0108.3 = 1) . . . 847
4025 – Dynamic following error monitoring, cam controllers (r0108.3 = 1) . . . 848

3.14 Encoder evaluation . . . 849
4704 – Position and temperature sensing, encoders 1 ... 2 . . . 850
4710 – Speed actual value and pole pos. sensing, motor encoder (encoder 1) . . . 851
4720 – Encoder interface, receive signals, encoders 1 ... 2 . . . 852
4730 – Encoder interface, send signals, encoders 1 ... 2 . . . 853

4735 – Reference mark search with external zero mark, encoder 1 . . . 854
4740 – Measuring probe evaluation, measured value memory, encoders 1 ... 2 . . . 855

3.15 Servo control . . . 856
5020 – Speed setpoint filter and speed pre-control . . . 857
5030 – Reference model/pre-control balancing/speed limitation . . . 858
5040 – Speed controller with encoder . . . 859
5042 – Speed controller, torque/speed pre-control with encoder (p1402.4 = 1) . . . 860
5050 – Speed controller adaptation (Kp_n/Tn_n adaptation) . . . 861
5060 – Torque setpoint, control type changeover . . . 862
5210 – Speed controller without encoder . . . 863
5300 – U/f control . . . 864
5301 – Signaling function variable . . . 865
5490 – Speed control configuration . . . 866
5610 – Torque limiting/reduction/interpolator . . . 867
5620 – Motoring/generating torque limit . . . 868
5630 – Upper/lower torque limit . . . 869
5640 – Mode changeover, power/current limiting . . . 870
5650 – Vdc_max controller and Vdc_min controller . . . 871
5710 – Current setpoint filter . . . 872
5714 – Iq and Id controllers . . . 873
5722 – Field current/flux input, flux reduction, flux controller . . . 874
5730 – Interface to the Power Module (gating signals, current actual values) . . . 875

3.16 Technology functions . . . 876
7014 – External Armature Short-Circuit (EASC, p0300 = 2xx or 4xx) . . . 877
7017 – DC brake (p0300 = 1xx) . . . 878

3.17 Free function blocks (FBLOCKS) . . . 879
7200 – General information . . . 880
7210 – AND (AND function block with 4 inputs) . . . 881
7212 – OR (OR function block with 4 inputs) . . . 882
7214 – XOR (XOR function block with 4 inputs) . . . 883
7216 – NOT (inverter) . . . 884
7220 – ADD (adder with 4 inputs), SUB (subtracter) . . . 885
7222 – MUL (multiplier), DIV (divider) . . . 886
7224 – AVA (absolute value generator) . . . 887
7230 – MFP (pulse generator), PCL (pulse contractor) . . . 888

7232 – PDE (ON delay), PDF (OFF delay) . . . 889
7234 – PST (pulse stretcher) . . . 890
7240 – RSR (RS flip-flop), DFR (D flip-flop) . . . 891
7250 – BSW (binary switch), NSW (numeric switch) . . . 892
7260 – LIM (limiter) . . . 893
7262 – PT1 (smoothing element) . . . 894
7264 – INT (integrator), DIF (derivative-action element) . . . 895
7270 – LVM (double-sided limit monitor with hysteresis) . . . 896

3.18 Technology controller . . . 897
7950 – Fixed values (r0108.16 = 1 and p2216 = 2) . . . 898
7951 – Fixed value selection direct (p2216 = 1) . . . 899
7954 – Motorized potentiometer (r0108.16 = 1) . . . 900
7958 – Closed-loop control (r0108.16 = 1) . . . 901

3.19 Signals and monitoring functions . . . 902
8010 – Speed signals 1 . . . 903
8011 – Speed signals 2 . . . 904
8012 – Torque signals, motor blocked/stalled . . . 905
8014 – Thermal monitoring, power unit . . . 906
8016 – Thermal monitoring, motor . . . 907

3.20 Diagnostics . . . 908
8060 – Fault buffer . . . 909
8065 – Alarm buffer . . . 910
8070 – Fault/alarm trigger word (r2129) . . . 911
8075 – Fault/alarm configuration . . . 912
8134 – Measuring sockets . . . 913

3.21 Data sets . . . 914
8560 – Command Data Sets (CDS) . . . 915
8565 – Drive Data Sets (DDS) . . . 916
8570 – Encoder Data Sets (EDS) . . . 917
8575 – Motor Data Sets (MDS) . . . 918

3.22 CANopen interface . . . 919
9204 – Receive telegram, free PDO mapping (p8744 = 2) . . . 920
9206 – Receive telegram, Predefined Connection Set (p8744 = 1) . . . 921
9208 – Send telegram, free PDO mapping (p8744 = 2) . . . 922

9210 – Send telegram, Predefined Connection Set (p8744 = 1) 923
9220 – Control word, CANopen 924
9226 – Status word, CANopen 925

3.23 Basic Operator Panel 20 (BOP20) 926
9912 – Control word interconnection 927

3.2 Explanations on the function diagrams

Function block diagrams

1020 – Explanation of the symbols (part 1)	718
1021 – Explanation of the symbols (part 2)	719
1022 – Explanation of the symbols (part 3)	720
1030 – Handling BICO technology	721

Parameter

Symbol	Meaning
Parameter name [Unit] rxxxx [x...y]	Monitoring parameter (parameter may appear .
Parameter name [Unit] Index name rxxxx[x]	Monitoring parameter with index.
[aaaa.b] Parameter name from ... to [Unit] pxxxx[y...z] (Def)	Setting parameter (if the parameter appears a multiple number of times, then diagram references are specified).
[aaaa.b] Parameter name Index name from ... to [Unit] pxxxx[y] (Def)	Setting parameter with index (if the parameter appears a multiple number of times, then diagram references are specified).

Connectors

Symbol	Meaning
Name pxxxx (xxxx)	Connector input CI.
name pxxxx[y] (xxxx [x])	Connector input CI with index [y]
name pxxxx[y...z] (xxxx [y])	Connector input CI with index range [y...z]
name [unit] rxxxx[y...z]	Connector output CO with [dimension unit] and index range [y...z].
name [unit] rxxxx[y]	Connector output CO [dimension unit] and with index [y]

Binectors

Symbol	Meaning
Name pxxxx (Def)	Binektoreingang BI Werkseinstellung (Def).
Name pxxxx[y] (Def)	Binector input BI with index [y] and factory setting (Def).
Name pxxxx[y...z] (Def)	Binector input BI with index range [y...z] and factory setting (Def).
Name rxxxx	Binector output BO.
name rxxxx.y	Binector output BO with bit y.

Connectors/binectors

Symbol	Meaning
Parameter name rxxxx rxxxx	Connector/binector output CO/BO

Cross references between diagrams

Symbol	Meaning
Signal path	The function diagrams are sub-divided into signal paths 1...8 in order to facilitate orientation.
Text → [aaaa.b]	Text = Unique signal designation aaaa = Signal goes to target diagram aaa b = Signal goes to signal path b
[cccc.d] → Text	Text = Unique signal designation cccc = Signal comes from source diagram cccc d = Signal comes from signal path d

Cross references for control bits

Symbol	Meaning
pxxxx [aaaa.b]	pxxxx= Original parameter of signal aaaa = Signal comes from source diagram aaaa b = Signal comes from signal path b

Data sets

Symbol	Meaning
pxxxx[C]	Parameter belongs to the Command Data Set (CDS).
pxxxx[D]	Parameter belongs to the Drive Data Set (DDS).
pxxxx[E]	Parameter belongs to the Encoder Data Set (EDS).
pxxxx[M]	Parameter belongs to the Motor Data Set (MDS).
pxxxx[P]	Parameter belongs to the Power unit Data Set (PDS).

Information on parameters, binectors, connectors

Symbol	Meaning
Parameter name	Parameter name (up to 18 characters)
[Unit]	[dimension unit]
rxxxx[y] or rxxxx[y...z] or rxxxx[y].ww or rxxxx.ww	"r" = monitoring parameter. These parameters are read-only "xxxx" stands for the parameter number "[y]" specifies the valid index, "[y...z]" specifies the applicable index range ".ww" specifies the bit number (e.g. 0...15).
pxxxx[y] or pxxxx[y...z] or pxxxx[y].ww or pxxxx.ww	"p" = setting parameter. These parameters can be changed. "xxxx" stands for the parameter number, "[y]" specifies the applicable index, "[y...z]" specifies the applicable index range ".ww" specifies the bit number (e.g. 0...15).
from ... to	Value range.
(xxxx[y].ww)	Parameter number (xxxx) with Index number [y] and bit number .ww.
(Def)	Factory setting.
(Def.w)	Factory setting with bit number as prefix.
[aaaa.b]	Diagram references for setting parameters that occur a multiple number of times. [Function diagram number, signal path]

Sampling times

Symbol	Meaning
ZZZ.ZZ µs	Fixed time slice.
PROFIdrive sampling time	According to presetting in p2048. (In synchronous mode, bus clock is valid.)
CAN bus sampling time	According to presetting in p2048.
Background Refer to [1020.7]	There is no fixed sampling time for this function. The processing takes place in background. The cycle time depends on the computational load of the control unit.
Not relevant Refer to [1020.7]	A static state is displayed here. The sampling time data is not relevant.

Fig. 3-1 1020 – Explanation of the symbols (part 1)

1	2	3	4	5	6	7	8
DO: All objects					fp_1020_98_eng.vsd	Function diagram	- 1020 -
Explanations for the function diagrams - Explanation of the symbols (Part 1)					28.05.10 V04.04.03	SINAMICS S110	

Pre-assigned binectors and connectors
Fixed percentage values

-10 000.00...10 000.00 [%] p2900[D] (0.00) → Fixed value 1 p2900[D]

-10 000.00...10 000.00 [%] p2901[D] (0.00) → Fixed value 2 p2901[D]

[8] = Fixed value -5 %
[9] = Fixed value -10 %
[10] = Fixed value -20 %
[11] = Fixed value -50 %
[12] = Fixed value -100 %
[13] = Fixed value -150 %
[14] = Fixed value -200 %

r2902[0...14] (0.00) → r2902[0...14]

Pre-assigned binectors and connectors
Fixed speed values

-210 000.000...210 000.000 [1/min] p1001[D] (0.000) → n_set_fixed 1 p1001[D]

-210 000.000...210 000.000 [1/min] p1015[D] (0.000) → n_set_fixed 15 p1015[D]

Pre-assigned binectors and connectors
Fixed torque values

-100 000.00...100 000.00 [Nm] p2930[D] (0.00) → Fixed value M [Nm] p2930[D]

Switch symbol

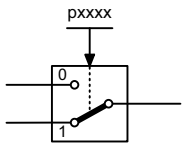

Simple changeover switch

The switch position is shown according to the factory setting
(in this case, switch position 1 in the default state on delivery).

Symbols for logic functions

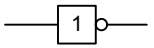

Logical inversion

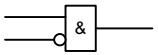

AND element with logical inversion of an input signal

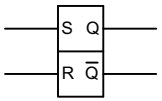

R/S flip-flop

S = setting input
R = reset input
Q = non-inverted output
$\overline{Q}$ = inverted output

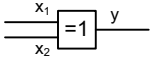

Exclusiv-OR/XOR

$y = 1$ for $x_1 \neq x_2$

Symbols for computational and closed-loop control functions

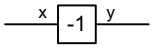

Sign reversal

$y = -x$

Absolute value generator

$y = |x|$

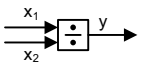

Divider

$y = \frac{x_1}{x_2}$

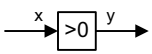

Comparator

Output y = a logical "1", if the analog signal x > 0, i.e. is positive.

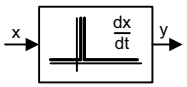

Differentiator

$y = \frac{dx}{dt}$

Symbol for monitoring

Axxxxx or Fxxxxx

Monitoring

In the bottom right-hand corner of the diagram.

Symbols for computational and closed-loop control functions

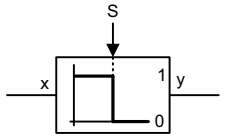

Threshold value switch 1/0

Outputs at y a logical "1" if x < S.

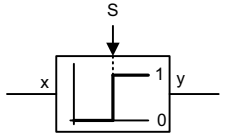

Threshold value switch 0/1

Outputs at y a logical "1" if x > S.

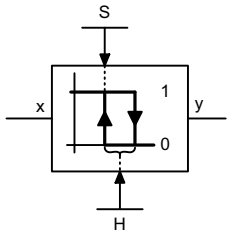

Threshold value 1/0 with hysteresis

Outputs a logical "1" at y if x < S.

If x >= S + H then y returns to 0.

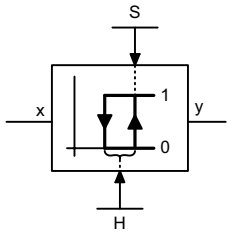

Threshold value 0/1 with hysteresis

Outputs a logical "1" at y if x > S.

If x <= S - H then y returns to 0.

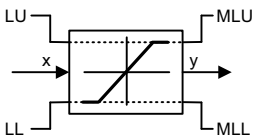

Limiter

x is limited to the upper limit LU and the lower limit LL and output at y.
The digital signals MLU and MLL have the value "1", if the upper or lower limit is active.

Sample & Hold element

Sample and hold element.
y = x if SET = 1
(not retentively saved at POWER OFF)

1	2	3	4	5	6	7	8
DO: All objects					fp_1021_98_eng.vsd	Function diagram	- 1021 -
Explanations for the function diagrams - Explanation of the symbols (Part 2)					25.05.08 V04.04.03	SINAMICS S110	

Fig. 3-2 1021 – Explanation of the symbols (part 2)

Switch-on delay

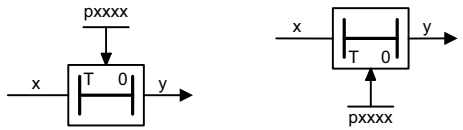

The digital signal x must have the value "1" without any interruption during the time T before output y changes to "1".

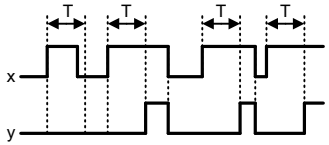

Switch-off delay

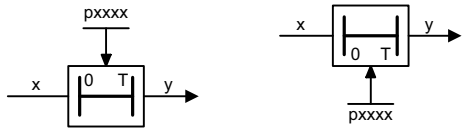

The digital signal x must have the value "0" without interruption during the time T before output y changes to "0".

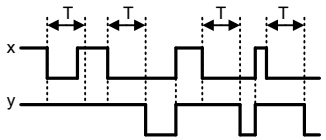

Delay (switch-on and switch-off)

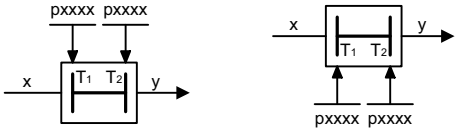

The digital signal x must have the value "1" without interruption during time T_1 or must have the value "0" during time T_2 before output y changes its signal state.

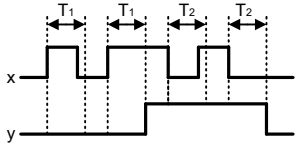

PT1 element

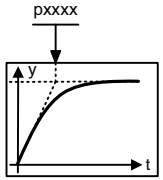

Delay element, first order.

pxxxx = time constant

PT2 low pass

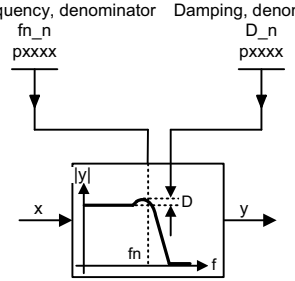

Transfer function

$$H(s) = \frac{1}{\left(\frac{s}{2\pi fn\_n}\right)^2 + \frac{2 \cdot D\_n}{2\pi fn\_n} \cdot s + 1}$$

2nd-order filter (bandstop/general filter)

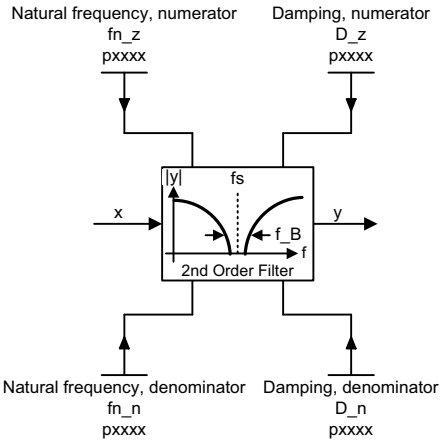

Used as bandstop filter

- center frequency fs: fn_z = fs, fn_n = fs
- bandwidth f_B: D_z = 0, $D\_n = \frac{f\_B}{2 \cdot fs}$

Transfer function when used as general filter

$$H(s) = \frac{\left(\frac{s}{2\pi fn\_z}\right)^2 + \frac{2 \cdot D\_z}{2\pi fn\_z} \cdot s + 1}{\left(\frac{s}{2\pi fn\_n}\right)^2 + \frac{2 \cdot D\_n}{2\pi fn\_n} \cdot s + 1}$$

Analog adder can be activated

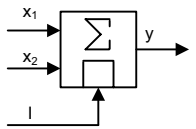

The following applies to I = 1 signal: $y = x_1 + x_2$

The following applies to I = 0 signal: $y = x_1$

1	2	3	4	5	6	7	8
DO: All objects					fp_1022_98_eng.vsd	Function diagram	- 1022 -
Explanations for the function diagrams - Explanation of the symbols (Part 3)					22.01.09 V04.04.03	SINAMICS S110	

Fig. 3-3 1022 – Explanation of the symbols (part 3)

Fig. 3-4 1030 – Handling BICO technology

Handling BICO technology

Binector: r0723.15

Binectors are binary signals that can be freely interconnected (BO = Binector Output).
They represent a bit of a "BO:" display parameter (e.g. bit 15 from r0723).

Connector: r0723

Connectors are "analog signals" that can be freely interconnected (e.g. percentage variables, speeds or torques).
Connectors are also "CO:" display parameters (CO = Connector Output).

Parameterization:

At the signal destination, the required binector or connector is selected using appropriate parameters:
"BI:" parameter for binectors (BI = Binector Input)
or
"CI:" parameter for connectors (CI = Connector Input)

Example:

The main setpoint for the speed controller (CI: p1070) should be received from the output of the motorized potentiometer (CO: r1050) and the "jog" command (BI: p1055) from digital input DI 0 (BO: r0722.0, X133.1 terminal) on the CU305.

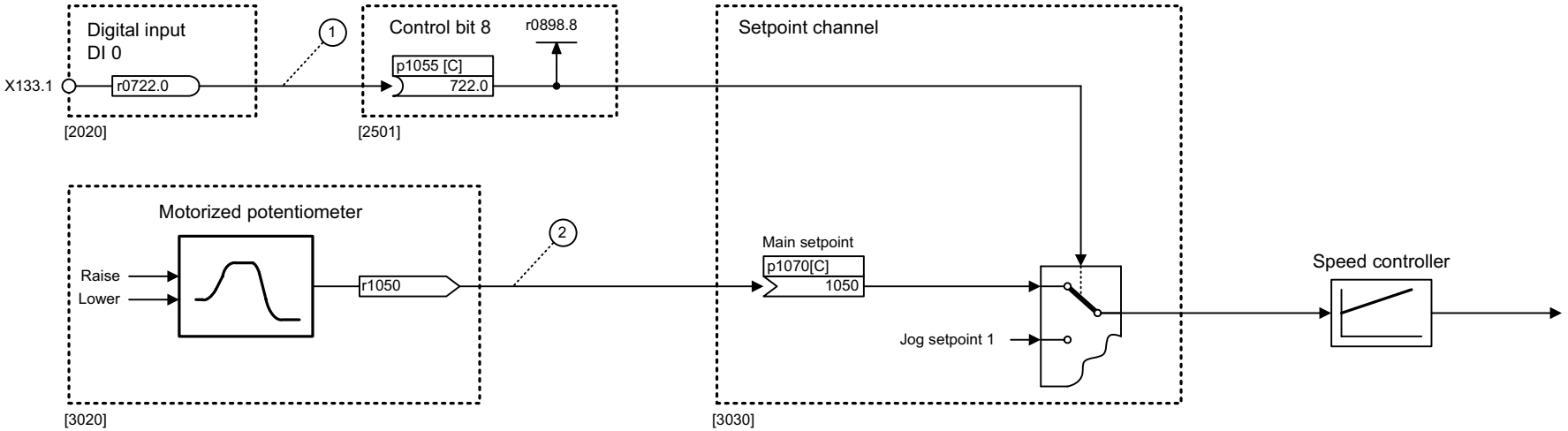

Parameterizing steps:

(1) p1055[0] = 722.0 Terminal X133.1 acts as "Jog bit 0".

(2) p1070[0] = 1050 The output of the motorized potentiometer acts as main setpoint for the speed controller.

1	2	3	4	5	6	7	8
DO: All objects					fp_1030_98_eng.vsd	Function diagram	- 1030 -
Explanations for the function diagrams - Handling BICO technology					22.01.09 V04.04.03	SINAMICS S110	

3.3 Overviews

Function block diagrams

1510 – CU305 input/output terminals	723
1520 – PROFIdrive	724
1530 – Internal control/status words, data sets	725
1550 – Setpoint channel	726
1580 – Servo control, encoder evaluations (position, speed, temperature)	727
1590 – Servo control, speed control and U/f control	728
1610 – Servo control, generation of the torque limits	729
1630 – Servo control, current control	730
1750 – Monitoring functions, faults, alarms	731

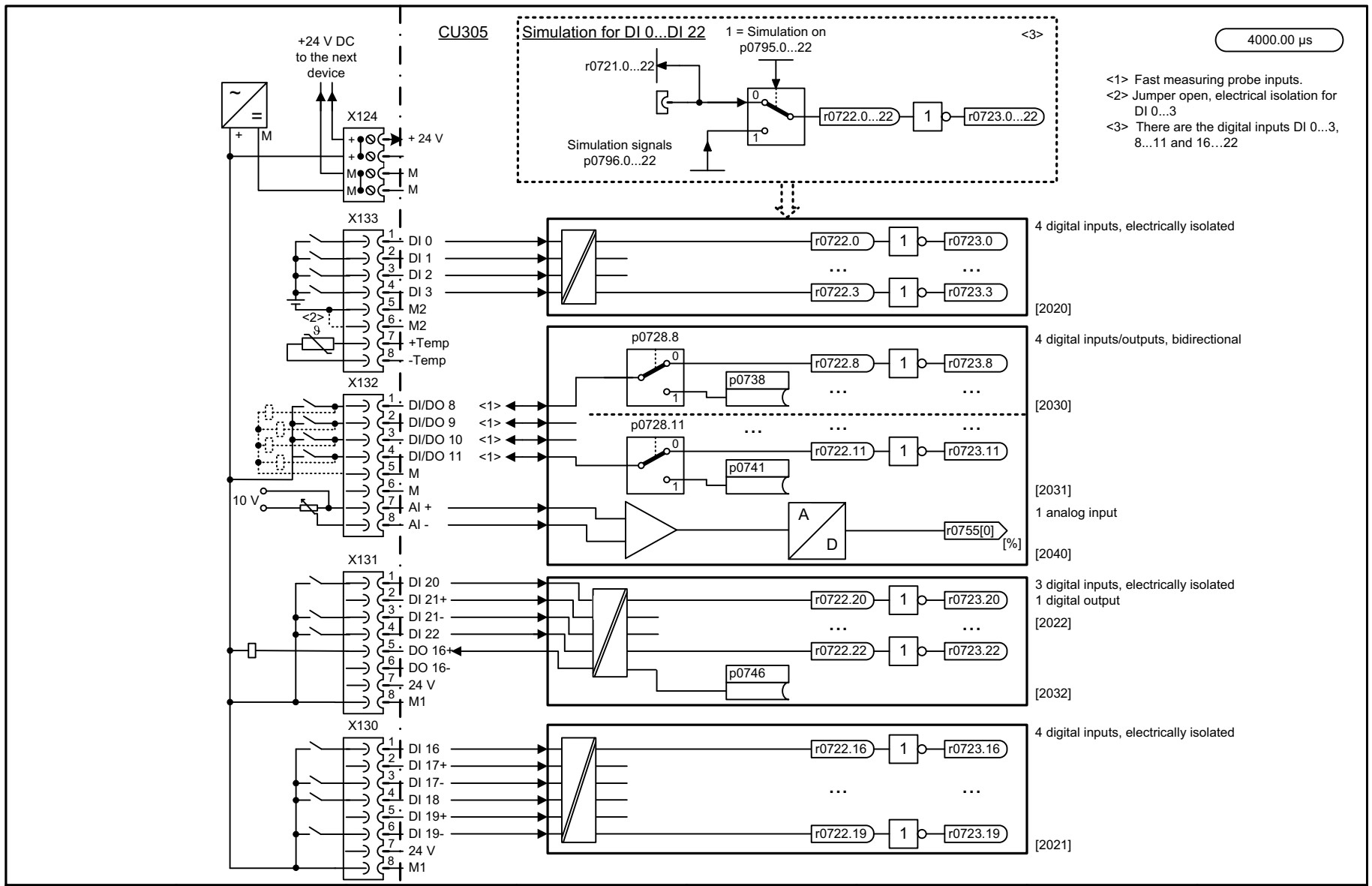

1	2	3	4	5	6	7	8
DO: CU_S110					fp_1510_98_eng.vsd	Function diagram	- 1510 -
Overviews - CU305 input/output terminals					21.11.14 V04.04.03	SINAMICS S110	

Fig. 3-5 1510 – CU305 input/output terminals

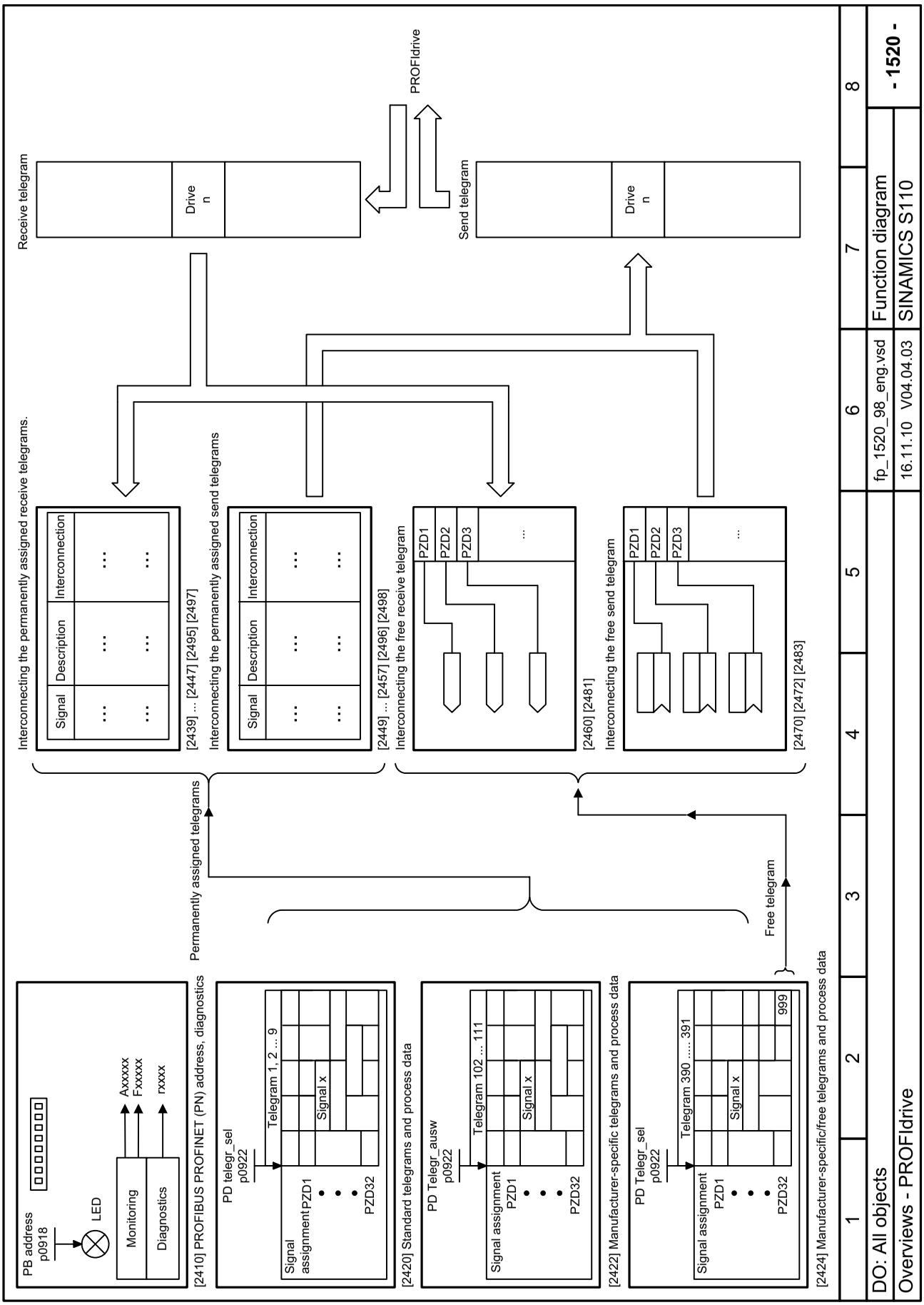

Fig. 3-6 1520 – PROFIdrive

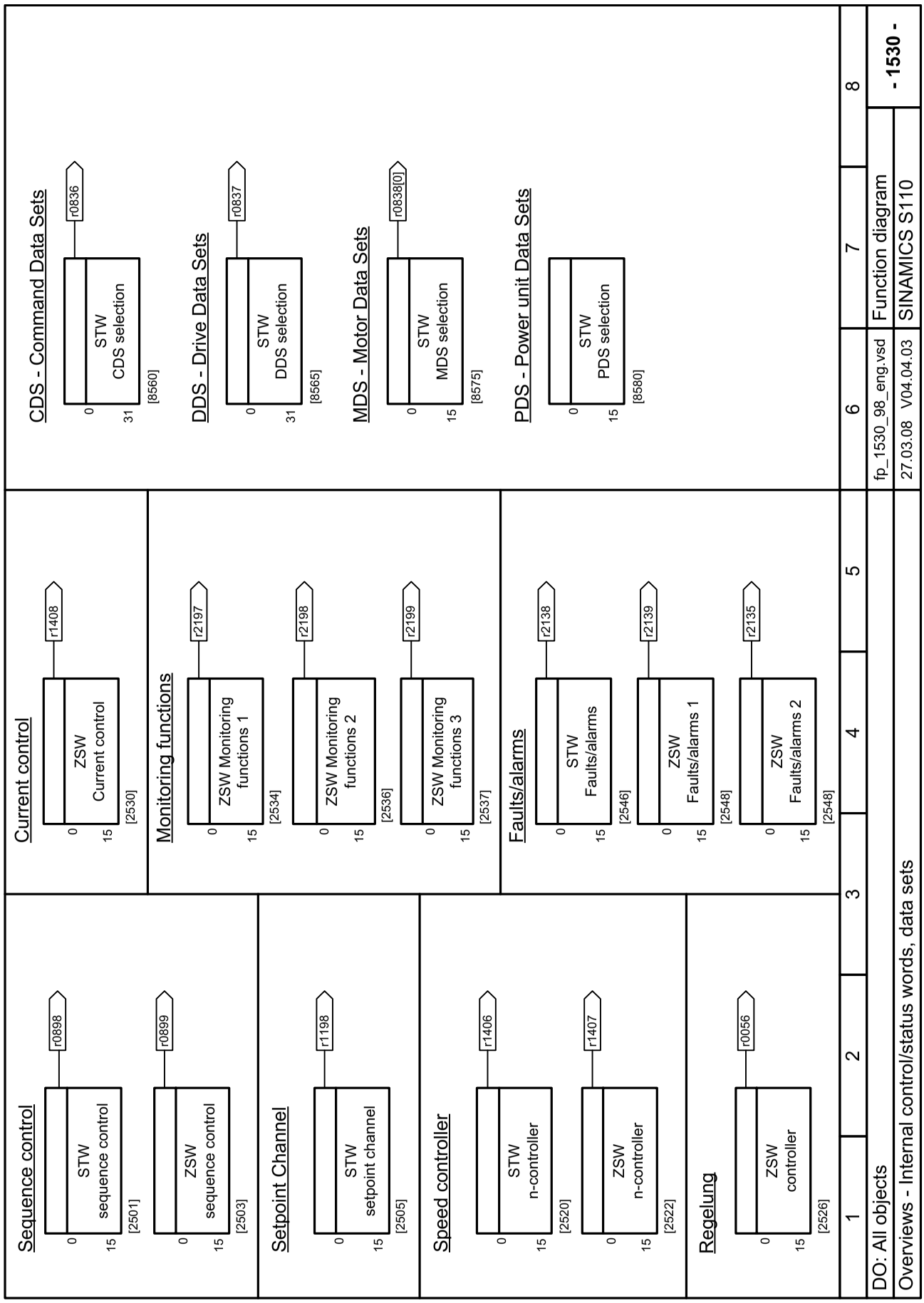

Fig. 3-7 1530 – Internal control/status words, data sets

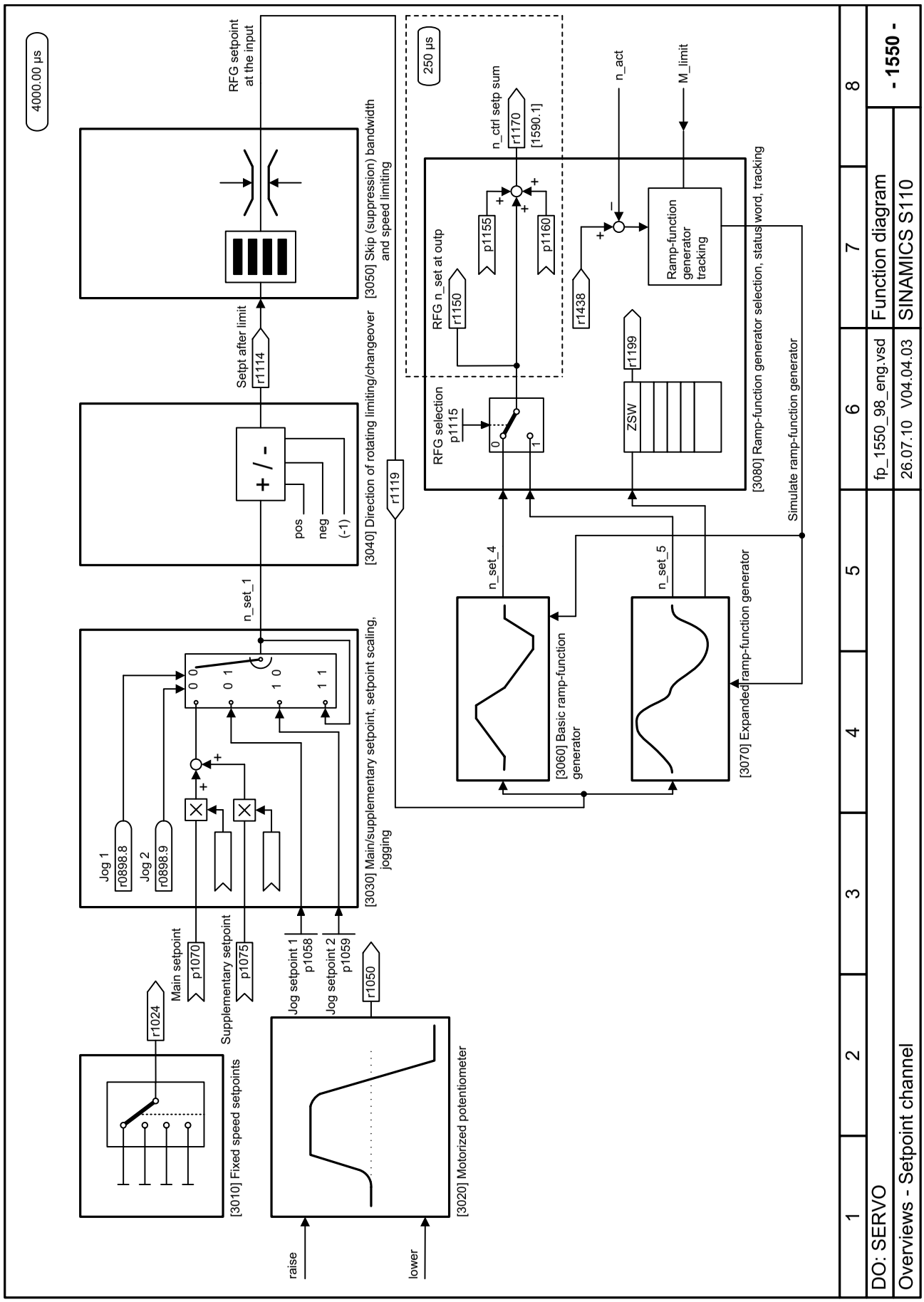

Fig. 3-8 1550 – Setpoint channel

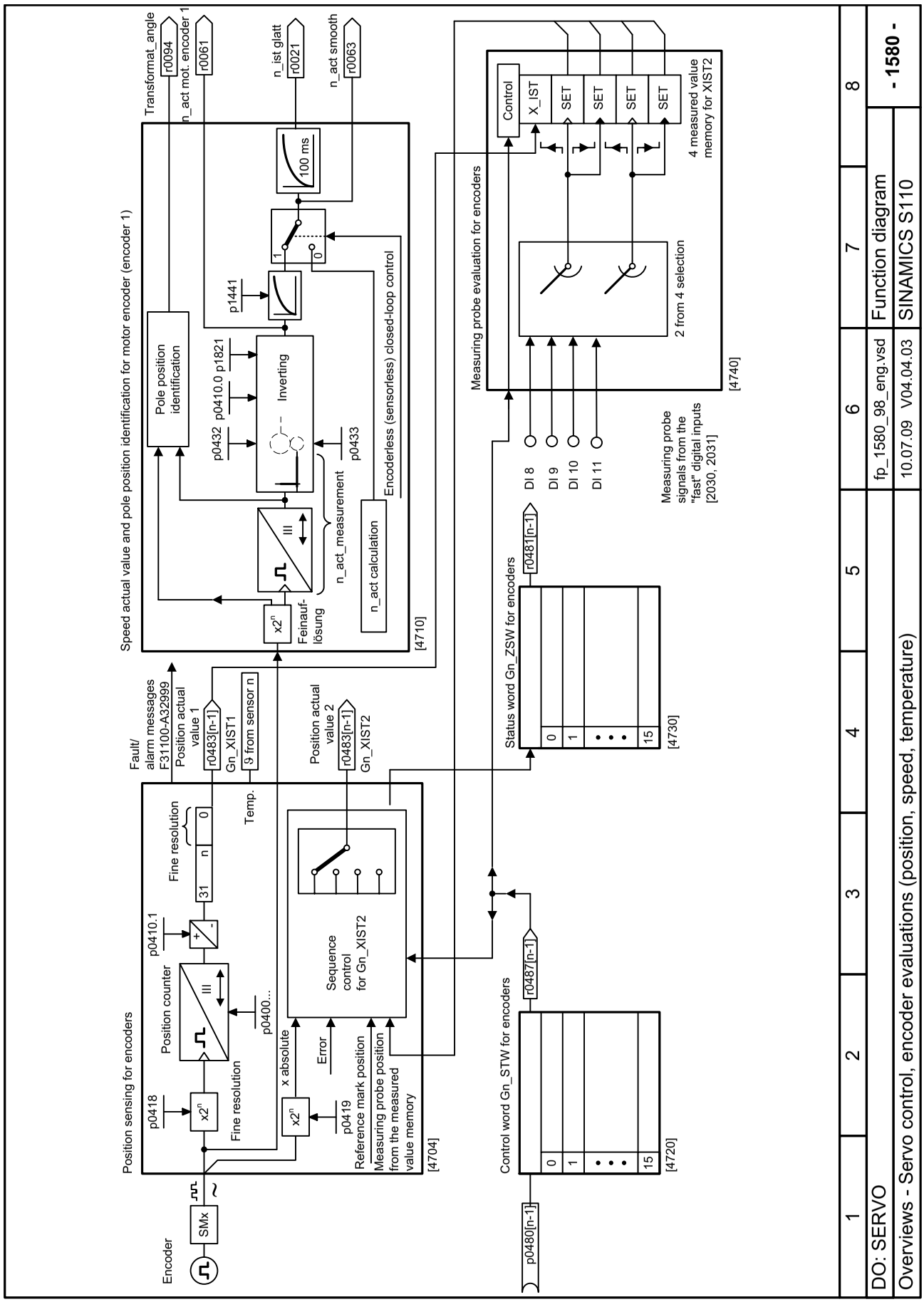

Fig. 3-9 1580 – Servo control, encoder evaluations (position, speed, temperature)

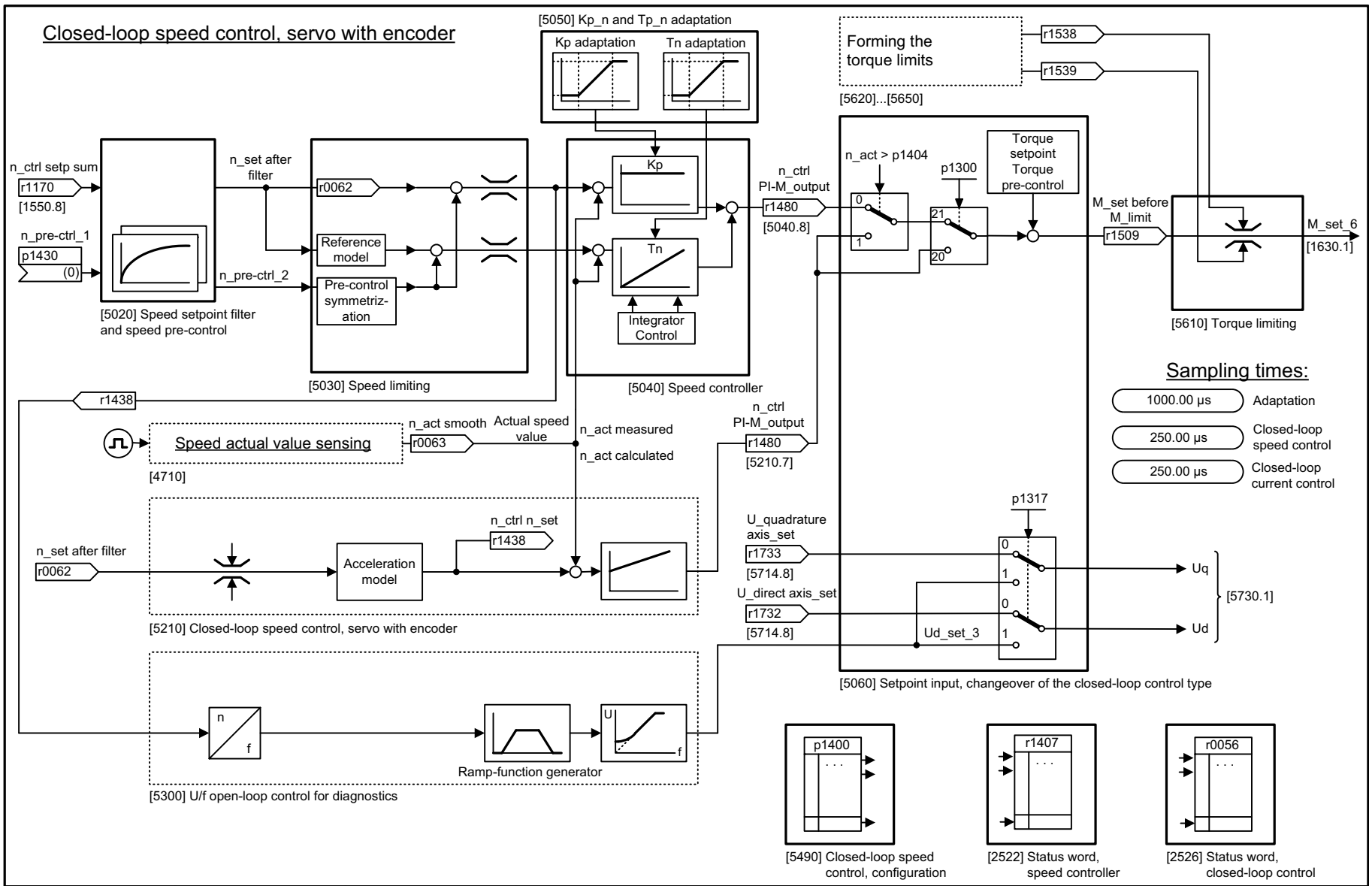

1	2	3	4	5	6	7	8
DO: SERVO					fp_1590_98_eng.vsd	Function diagram	- 1590 -
Overviews - Servo control, speed control and U/f control					28.10.08 V04.04.03	SINAMICS S110	

Fig. 3-10 1590 – Servo control, speed control and U/f control

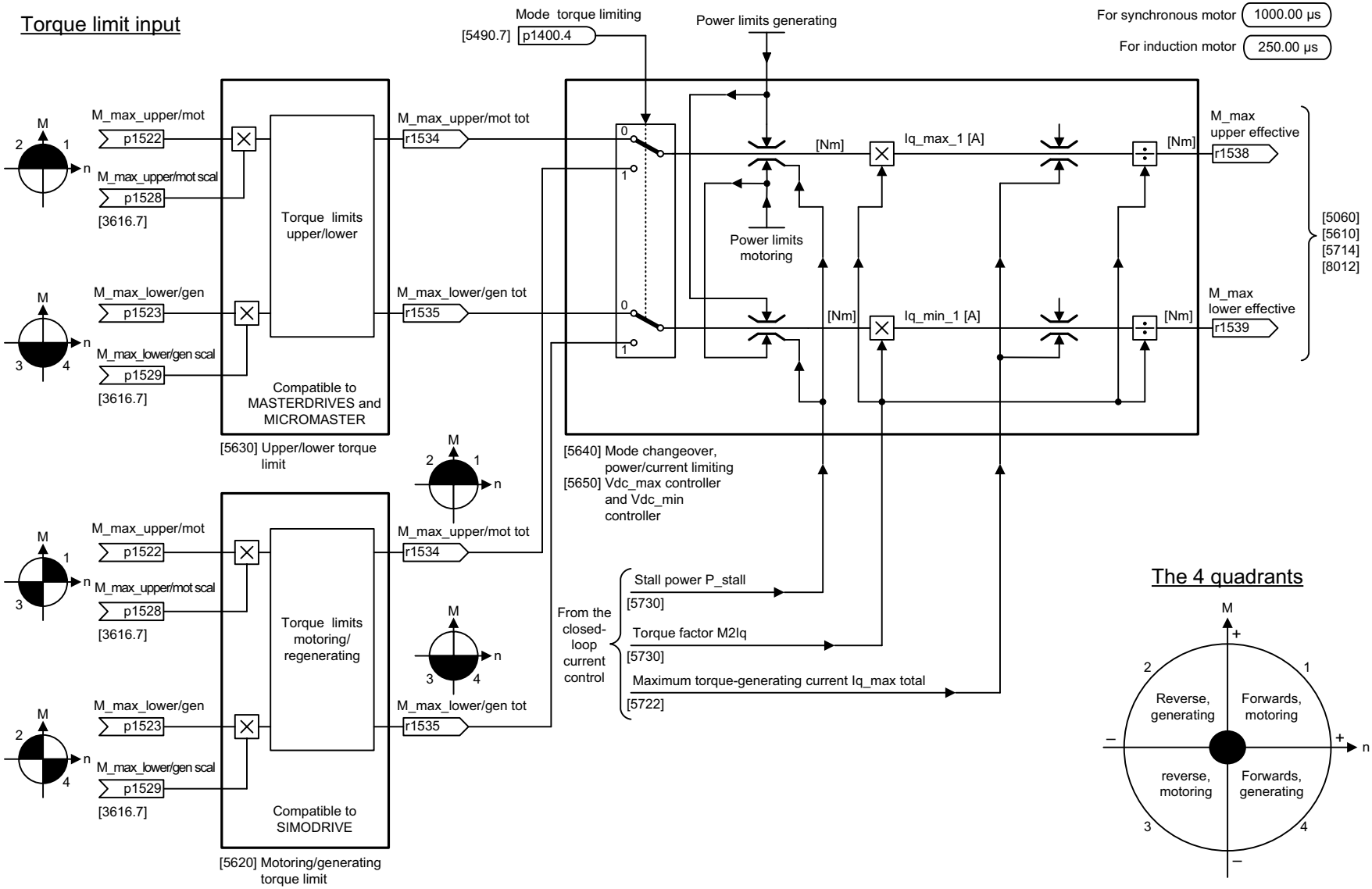

1	2	3	4	5	6	7	8
DO: SERVO					fp_1610_98_eng.vsd	Function diagram	- 1610 -
Overviews - Servo control, generation of the torque limits					28.10.08 V04.04.03	SINAMICS S110	

Fig. 3-11 1610 – Servo control, generation of the torque limits

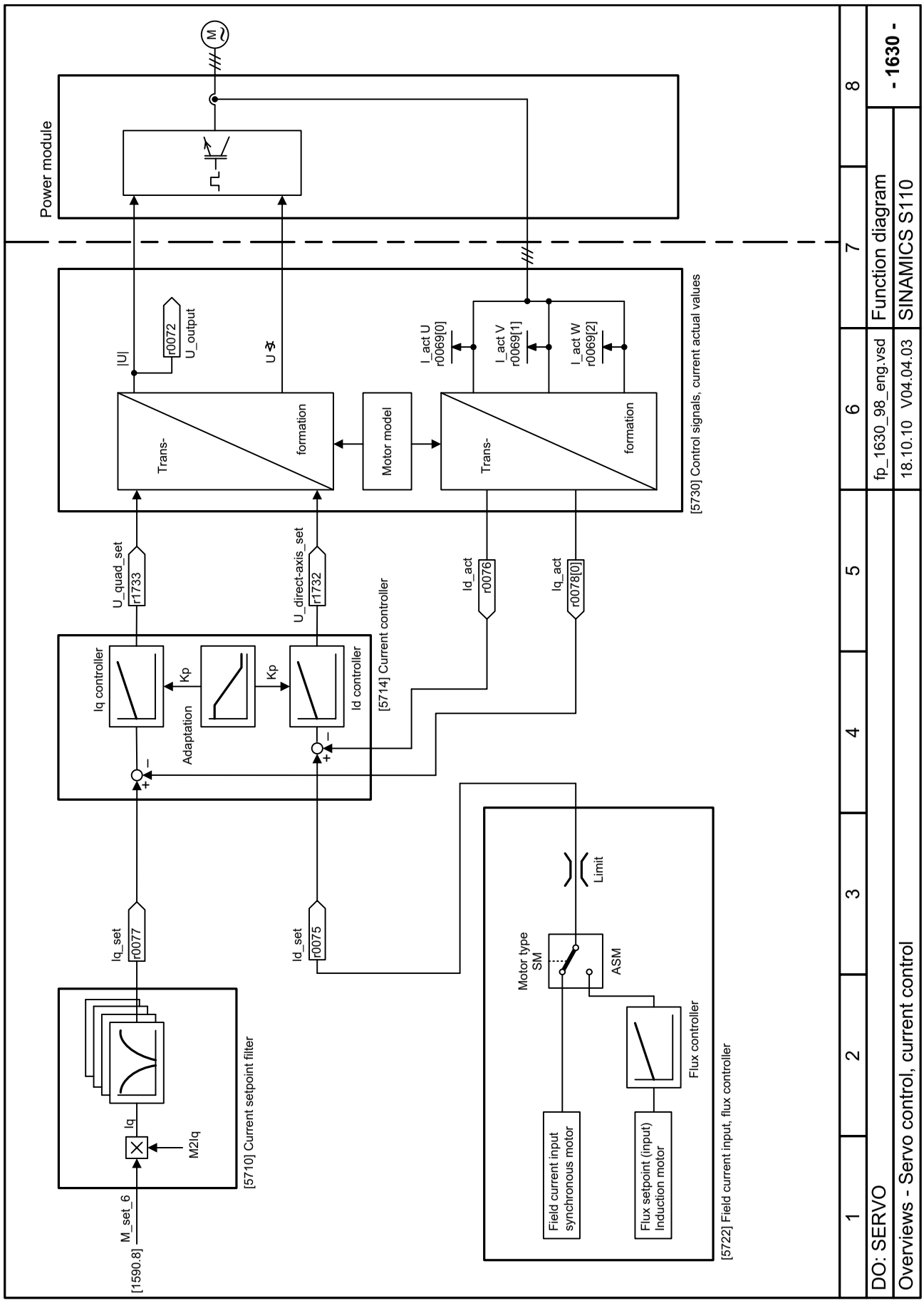

Fig. 3-12 1630 – Servo control, current control

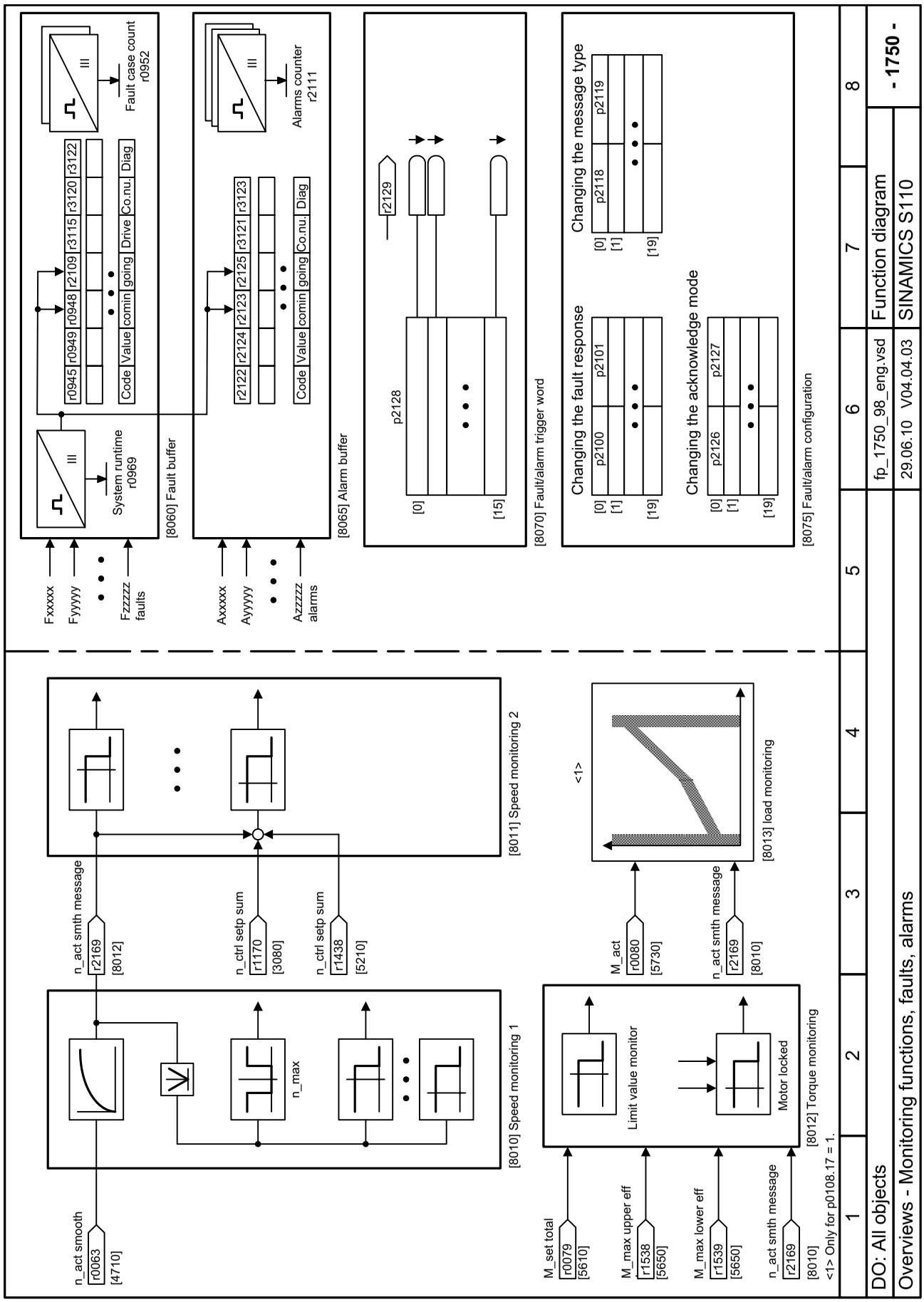

Fig. 3-13 1750 – Monitoring functions, faults, alarms

3.4 CU305 input/output terminals

Function block diagrams

2020 – Digital inputs, electrically isolated (DI 0 … DI 3)	733
2021 – Digital inputs, electrically isolated (DI 16 … DI 19)	734
2022 – Digital inputs, electrically isolated (DI 20 … DI 22)	735
2030 – Digital inputs/outputs, bidirectional (DI/DO 8 … DI/DO 9)	736
2031 – Digital inputs/outputs, bidirectional (DI/DO 10 … DI/DO 11)	737
2038 – Digital output (DO 16)	738
2040 – Analog input (AI)	739

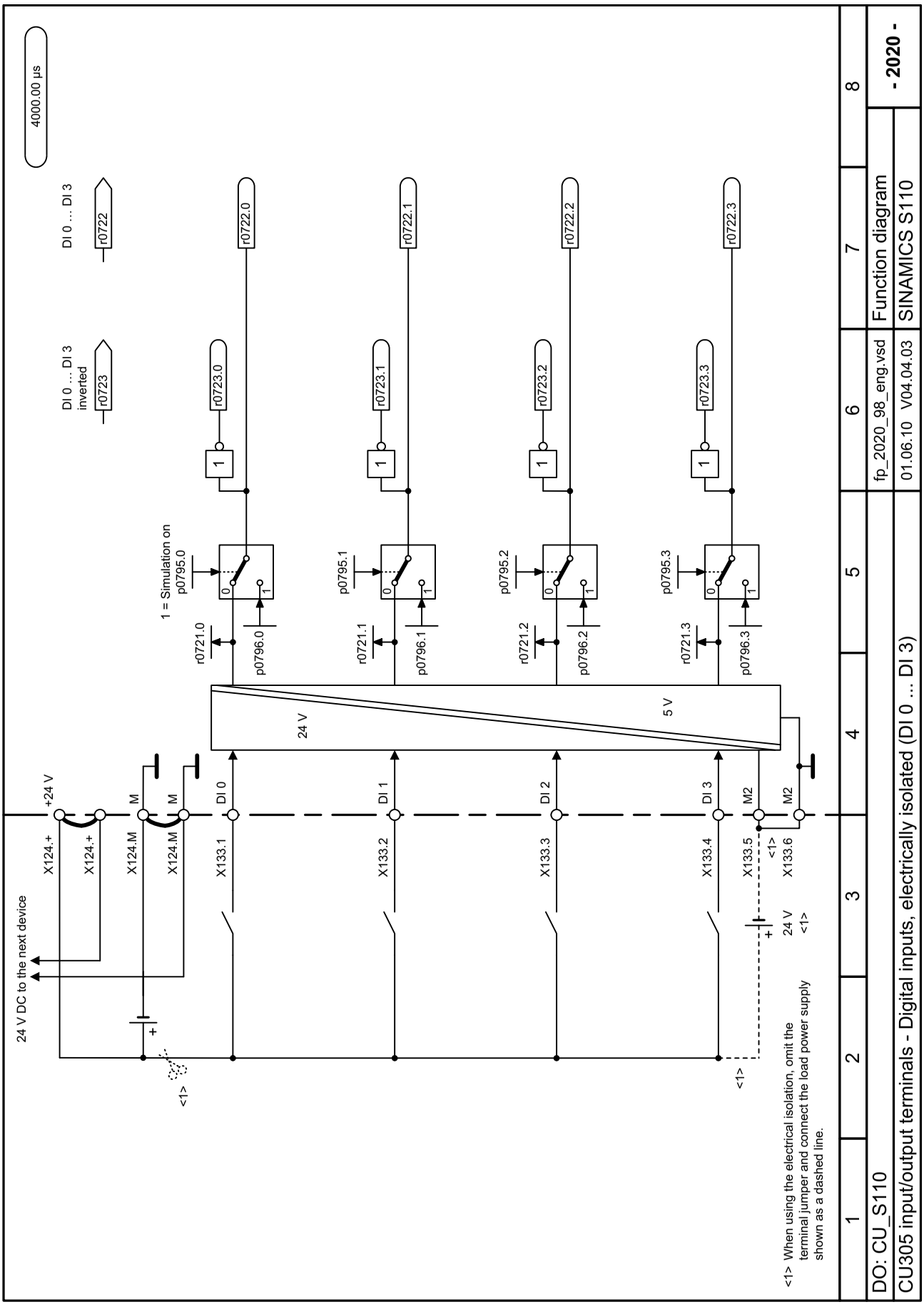

Fig. 3-14 2020 – Digital inputs, electrically isolated (DI 0 … DI 3)

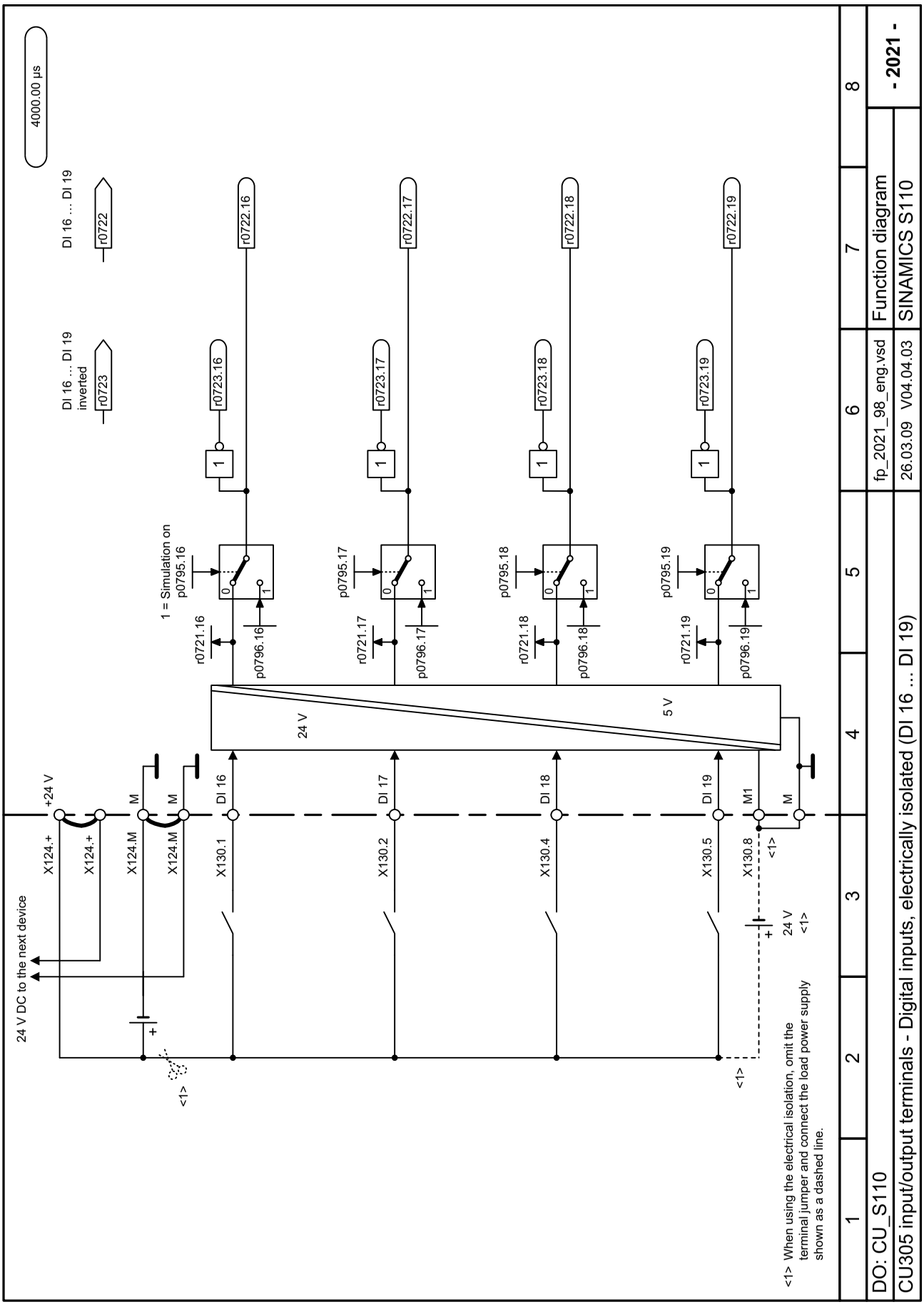

Fig. 3-15 2021 – Digital inputs, electrically isolated (DI 16 … DI 19)

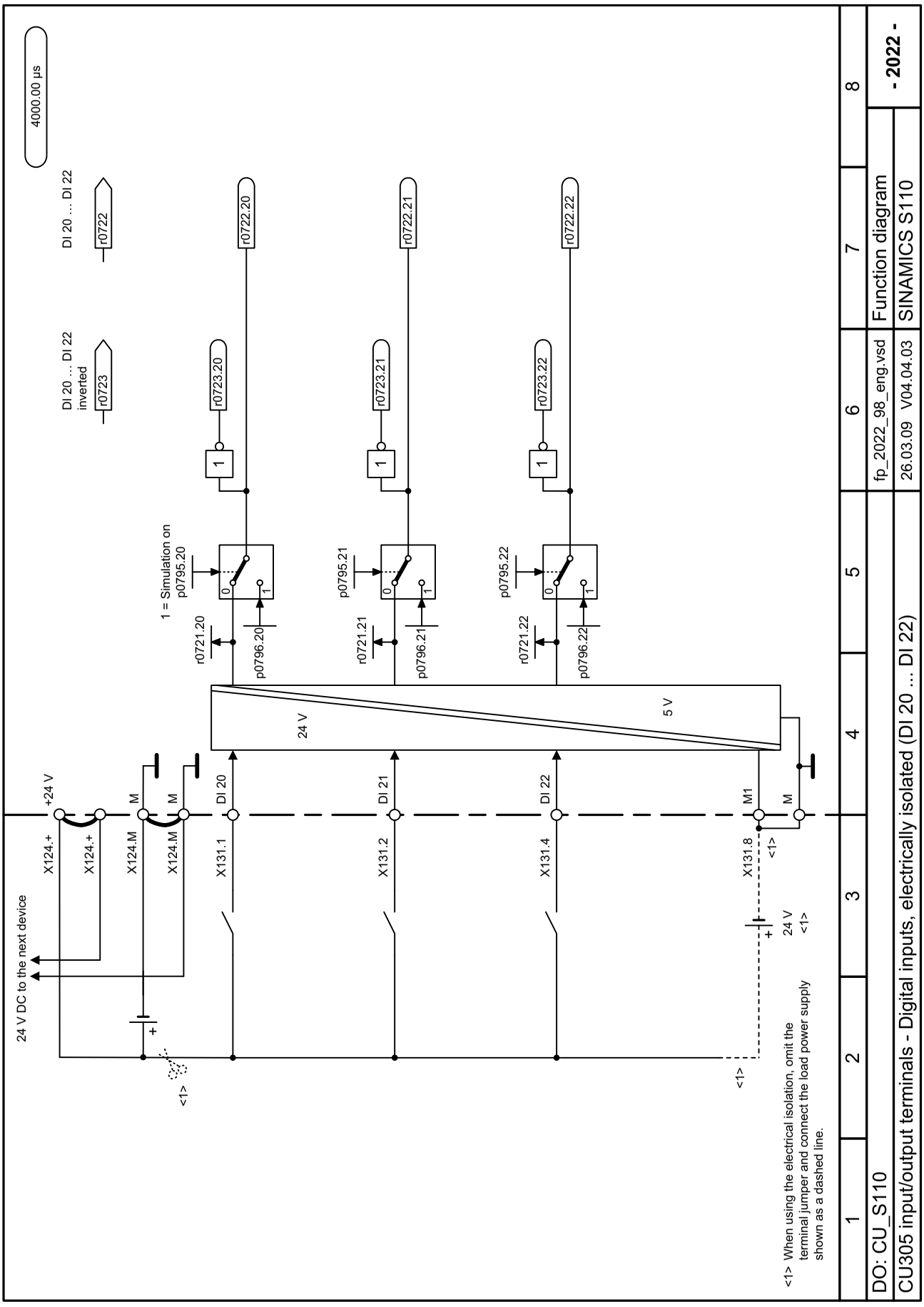

Fig. 3-16 2022 – Digital inputs, electrically isolated (DI 20 … DI 22)

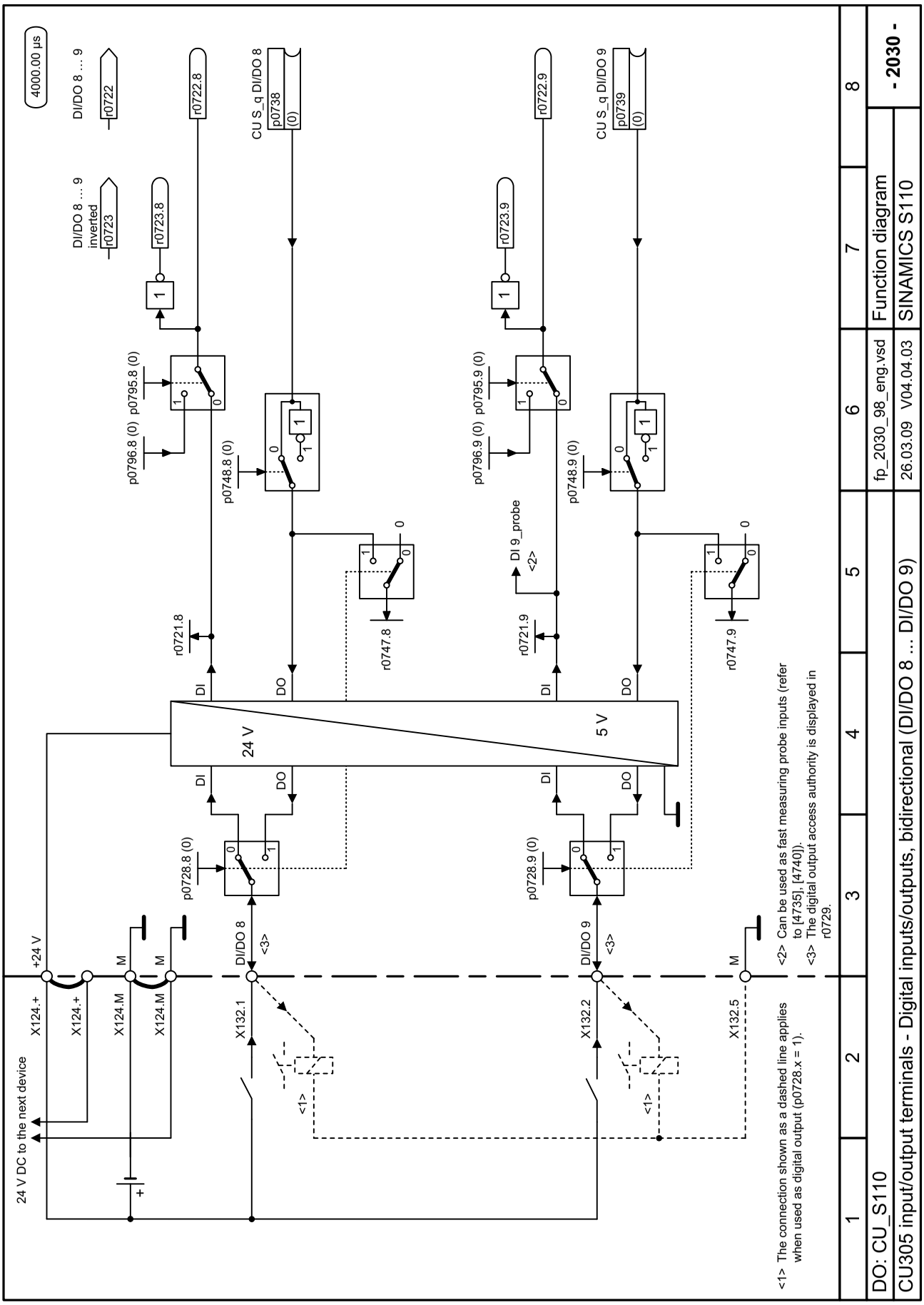

Fig. 3-17 2030 – Digital inputs/outputs, bidirectional (DI/DO 8 … DI/DO 9)

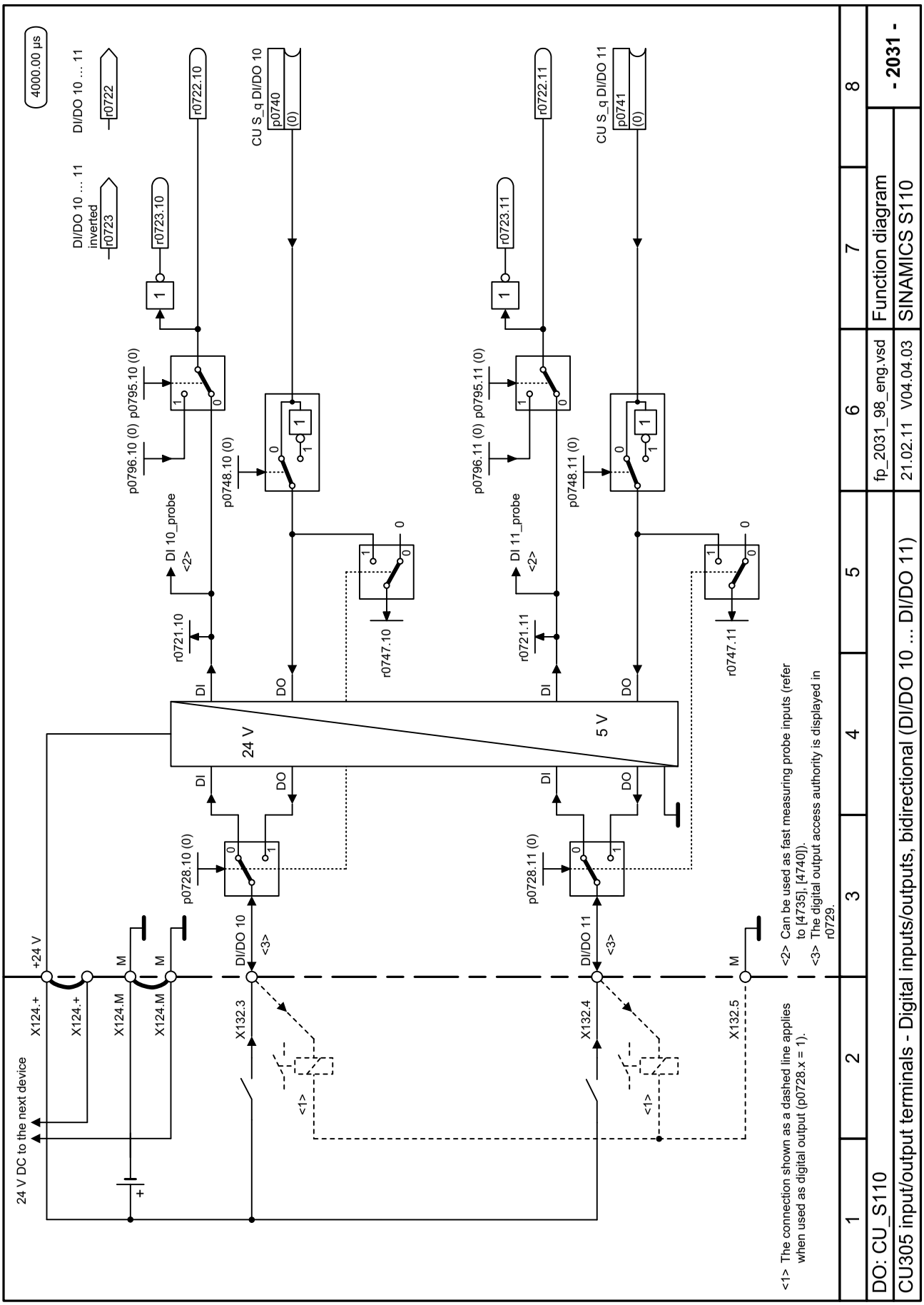

Fig. 3-18 2031 – Digital inputs/outputs, bidirectional (DI/DO 10 … DI/DO 11)

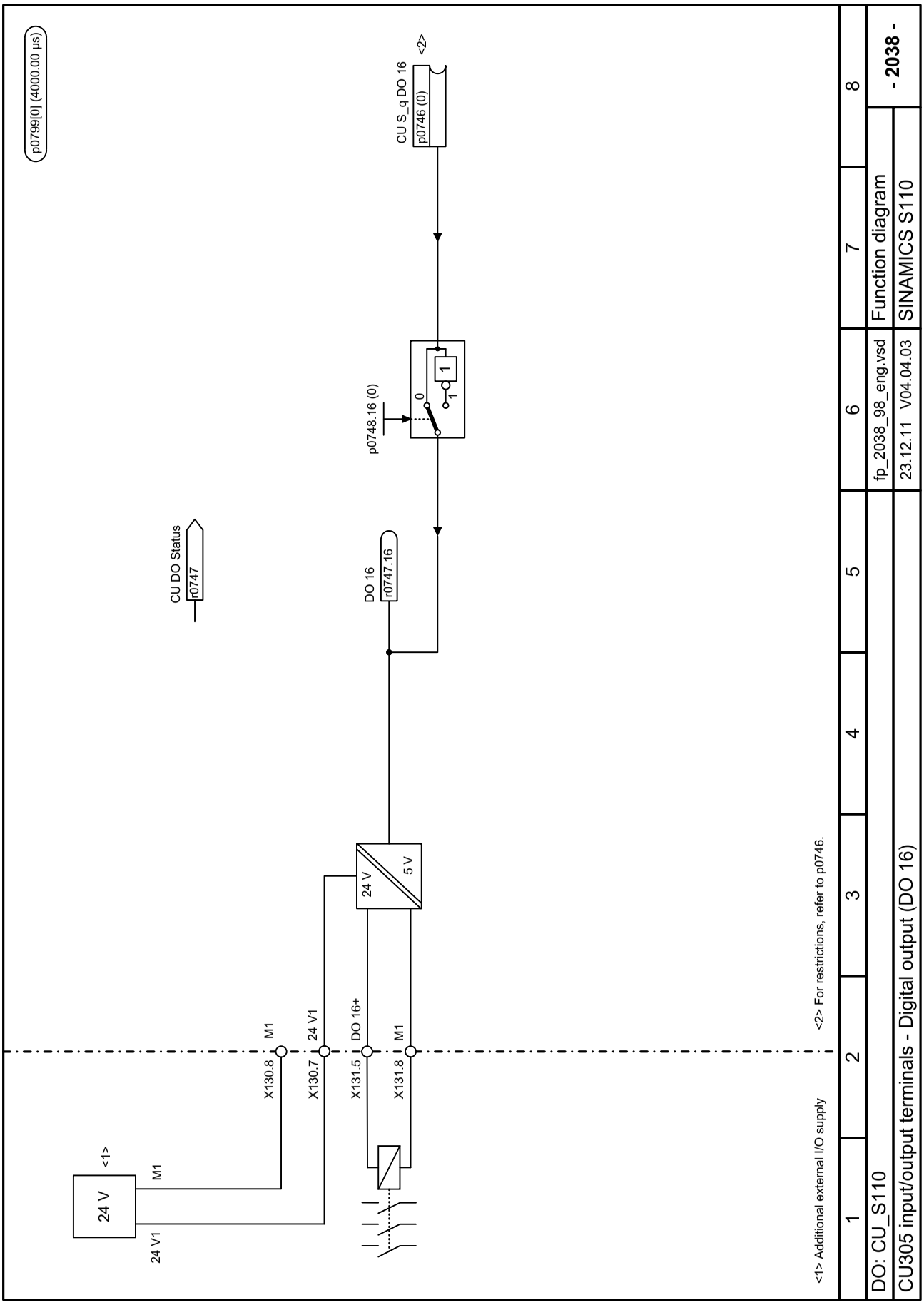

Fig. 3-19 2038 – Digital output (DO 16)

Fig. 3-20 2040 – Analog input (AI)

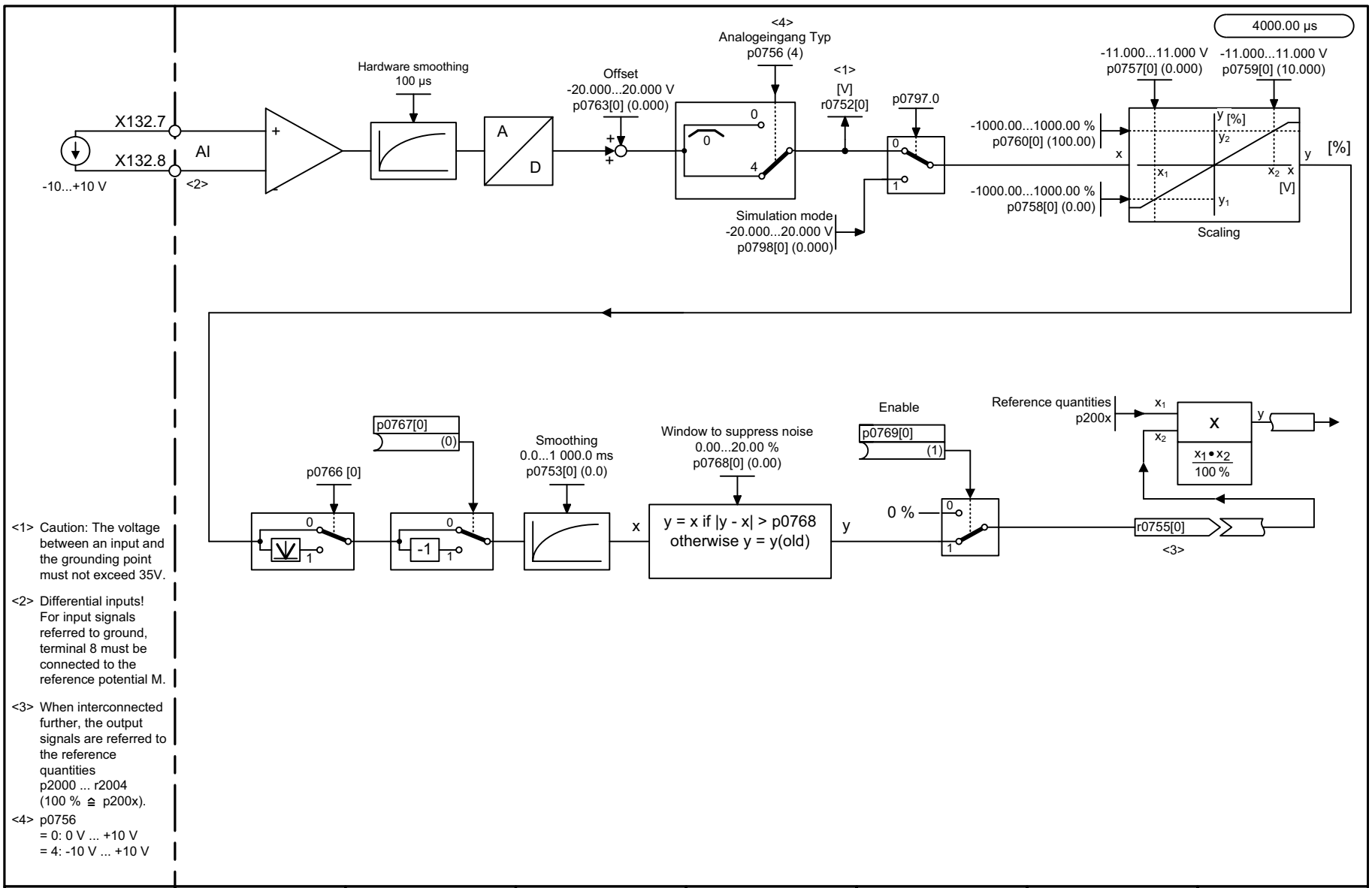

1	2	3	4	5	6	7	8
DO: CU_S110					fp_2040_98_eng.vsd	Function diagram	- 2040 -
CU305 - Analog input (AI)					07.08.09 V04.04.03	SINAMICS S110	

3.5 PROFIdrive

Function block diagrams

2410 – PROFIBUS (PB) / PROFINET (PN), addresses and diagnostics	742
2420 – Standard telegrams and process data	743
2422 – Manufacturer-specific telegrams and process data	744
2424 – Manufacturer-specific/free telegrams and process data	745
2439 – PZD receive signals, interconnection profile-specific	746
2440 – PZD receive signals interconnection, manufacturer-specific	747
2442 – STW1 control word interconnection (p2038 = 0)	748
2443 – STW1 control word interconnection (p2038 = 1)	749
2444 – STW2 control word interconnection (p2038 = 0)	750
2445 – STW2 control word interconnection (p2038 = 1)	751
2449 – PZD send signals interconnection, profile-specific	752
2450 – PZD send signals interconnection, manufacturer-specific	753
2452 – ZSW1 status word interconnection (p2038 = 0)	754
2453 – ZSW1 status word interconnection (p2038 = 1)	755
2454 – ZSW2 status word interconnection (p2038 = 0)	756
2455 – ZSW2 status word interconnection (p2038 = 1)	757
2456 – MELDW status word interconnection	758
2462 – POS_STW positioning control word interconnection (r0108.4 = 1)	759
2463 – POS_STW1 positioning control word 1 interconnection (r0108.4 = 1)	760
2464 – POS_STW2 positioning control word 2 interconnection (r0108.4 = 1)	761
2466 – POS_ZSW1 positioning status word 1 interconnection (r0108.4 = 1)	762
2467 – POS_ZSW2 positioning status word 2 interconnection (r0108.4 = 1)	763
2468 – IF1 receive telegram, free interconnection via BICO (p0922 = 999)	764
2470 – IF1 send telegram, free interconnection via BICO (p0922 = 999)	765
2472 – IF1 status words, free interconnection	766
2475 – STW1 control word 1 interconnection (r0108.4 = 1)	767
2476 – SATZANW block selection interconnection (r0108.4 = 1)	768

2479 – ZSW1 status word 1 interconnection (r0108.4 = 1)	769
2480 – MDI_MOD-MDI mode interconnection (r0108.4 = 1)	770
2481 – IF1 receive telegram, free interconnection via BICO (p0922 = 999)	771
2483 – IF1 send telegram, free interconnection via BICO (p0922 = 999)	772
2495 – CU_STW1 control word, Control Unit interconnection	773
2496 – CU_ZSW1 status word, Control Unit interconnection	774
2497 – A_DIGITAL interconnection	775
2498 – E_DIGITAL interconnection	776

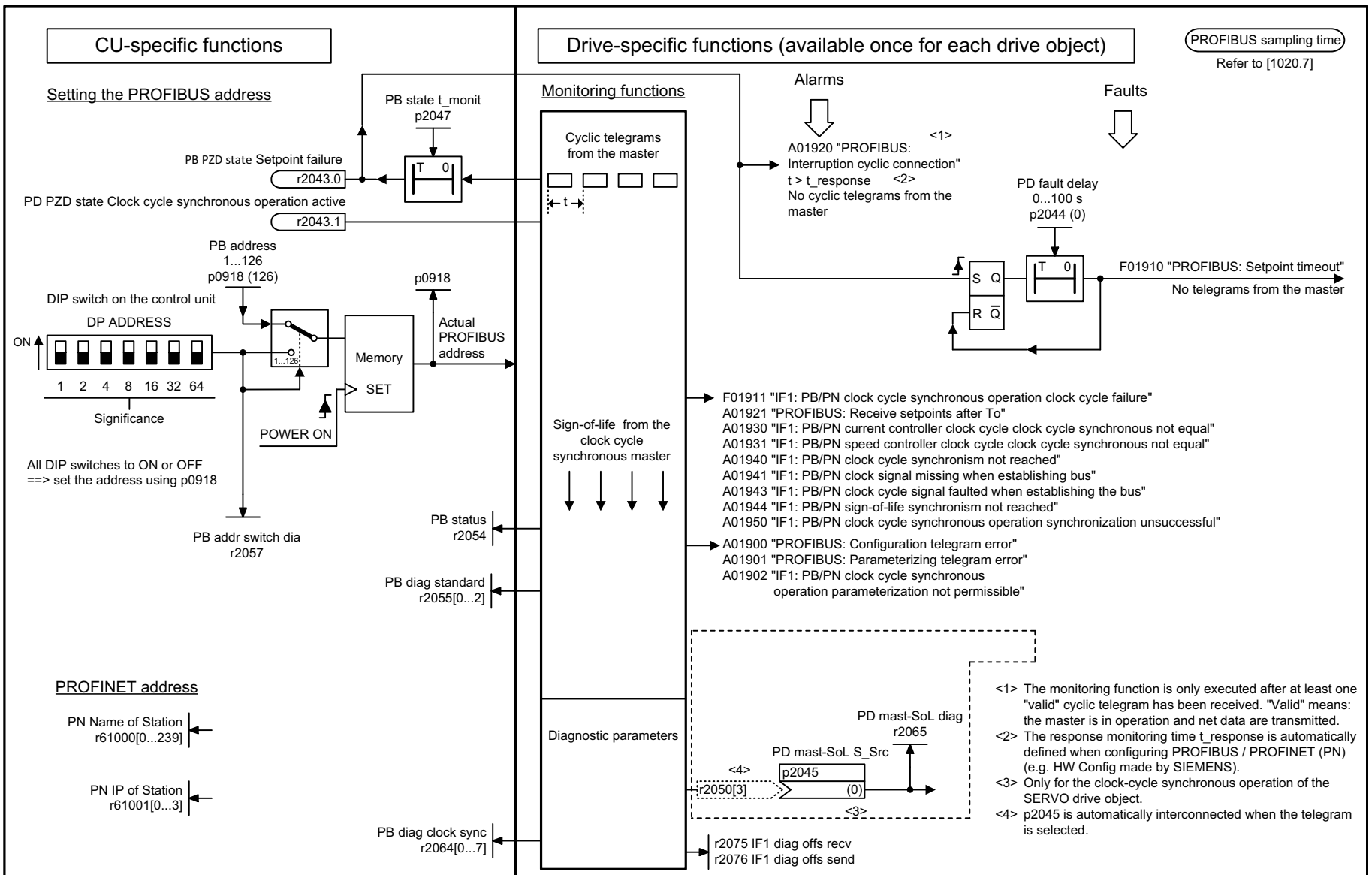

Fig. 3-21 2410 – PROFIBUS (PB) / PROFINET (PN), addresses and diagnostics

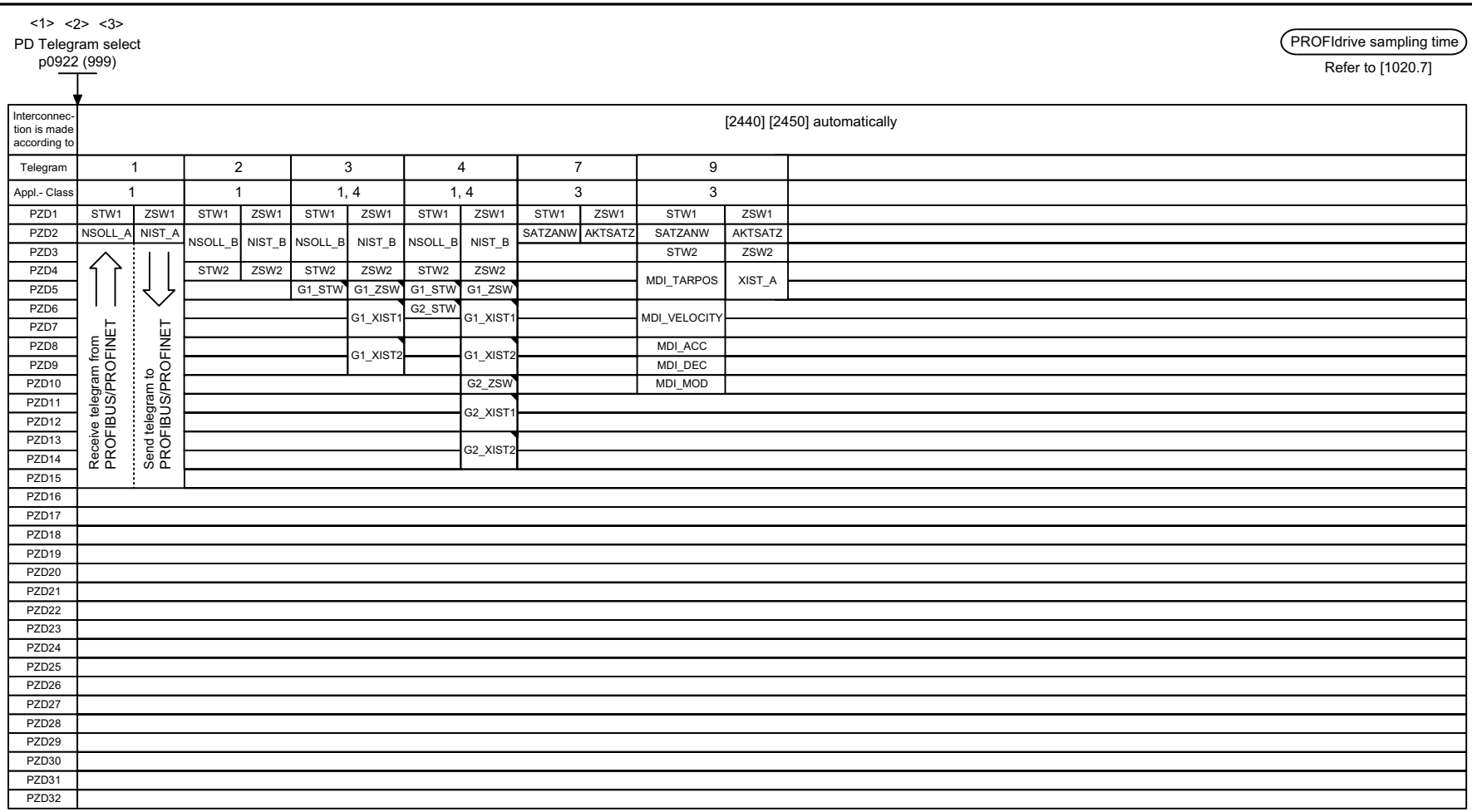

<1> Depending on the drive object, only specific telegrams can be used.

<2> If p0922 = 999 is changed to another value, the telegram is automatically assigned as specified in [2420] - [2424].
If p0922 ≠ 999 is changed to p0922 = 999, the "old" telegram assignment is maintained as specified in [2420] - [2424]!

<3> The maximum number of PZD words depends on the drive object type.

= Position encoder signal

Fig. 3-22 2420 – Standard telegrams and process data

1	2	3	4	5	6	7	8
DO: SERVO					fp_2420_98_eng.vsd	Function diagram	- 2420 -
PROFIdrive - Standard telegrams and Process Data					16.11.10 V04.04.03	SINAMICS S110	

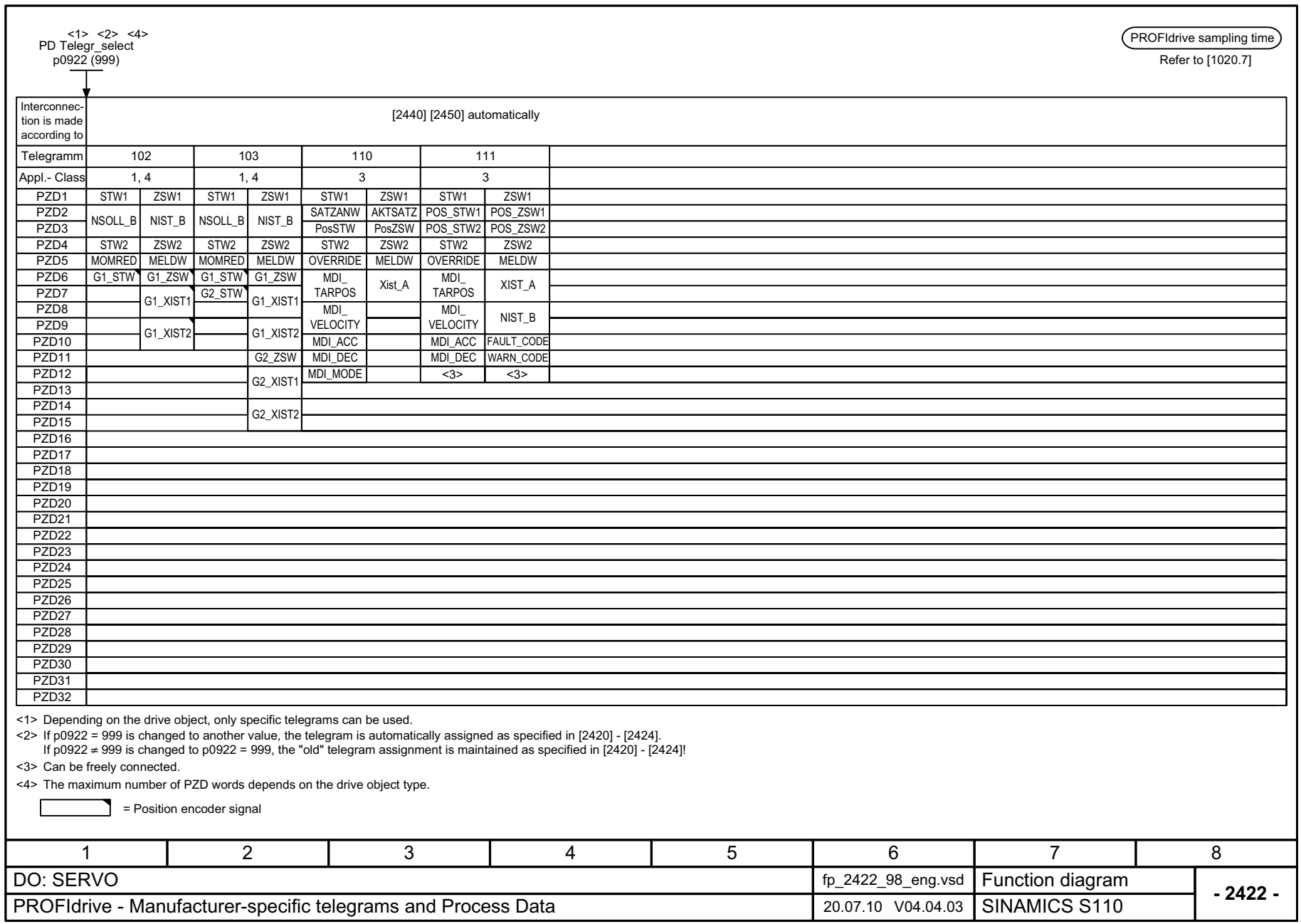

Interconnection is made according to	[2440] [2450] automatically								
Telegramm	102		103		110		111		
Appl.- Class	1, 4		1, 4		3		3		
PZD1	STW1	ZSW1	STW1	ZSW1	STW1	ZSW1	STW1	ZSW1	
PZD2	NSOLL_B	NIST_B	NSOLL_B	NIST_B	SATZANW	AKTSATZ	POS_STW1	POS_ZSW1	
PZD3					PosSTW	PosZSW	POS_STW2	POS_ZSW2	
PZD4	STW2	ZSW2	STW2	ZSW2	STW2	ZSW2	STW2	ZSW2	
PZD5	MOMRED	MELDW	MOMRED	MELDW	OVERRIDE	MELDW	OVERRIDE	MELDW	
PZD6	G1_STW	G1_ZSW	G1_STW	G1_ZSW	MDI_ TARPOS	Xist_A	MDI_ TARPOS	XIST_A	
PZD7		G1_XIST1	G2_STW	G1_XIST1					
PZD8					MDI_ VELOCITY		MDI_ VELOCITY	NIST_B	
PZD9		G1_XIST2		G1_XIST2					
PZD10					MDI_ACC		MDI_ACC	FAULT_CODE	
PZD11				G2_ZSW	MDI_DEC		MDI_DEC	WARN_CODE	
PZD12				G2_XIST1	MDI_MODE		<3>	<3>	
PZD13									
PZD14				G2_XIST2					
PZD15									
PZD16									
PZD17									
PZD18									
PZD19									
PZD20									
PZD21									
PZD22									
PZD23									
PZD24									
PZD25									
PZD26									
PZD27									
PZD28									
PZD29									
PZD30									
PZD31									
PZD32									

<1> Depending on the drive object, only specific telegrams can be used.
<2> If p0922 = 999 is changed to another value, the telegram is automatically assigned as specified in [2420] - [2424].
If p0922 ≠ 999 is changed to p0922 = 999, the "old" telegram assignment is maintained as specified in [2420] - [2424]!
<3> Can be freely connected.
<4> The maximum number of PZD words depends on the drive object type.

= Position encoder signal

1	2	3	4	5	6	7	8
DO: SERVO					fp_2422_98_eng.vsd	Function diagram	- 2422 -
PROFIdrive - Manufacturer-specific telegrams and Process Data					20.07.10 V04.04.03	SINAMICS S110	

Fig. 3-23 2422 – Manufacturer-specific telegrams and process data

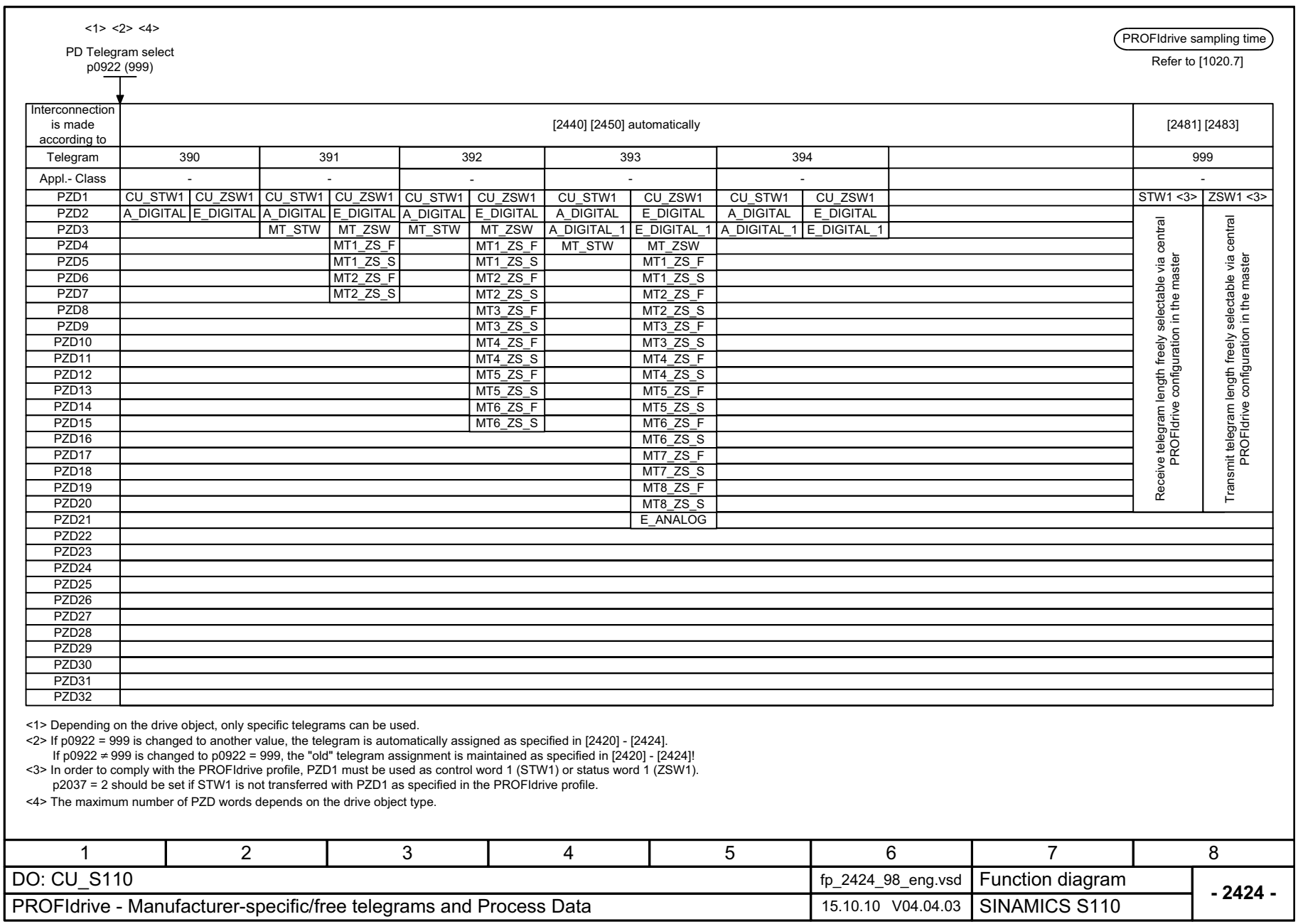

<1> Depending on the drive object, only specific telegrams can be used.
<2> If p0922 = 999 is changed to another value, the telegram is automatically assigned as specified in [2420] - [2424].
If p0922 ≠ 999 is changed to p0922 = 999, the "old" telegram assignment is maintained as specified in [2420] - [2424]!
<3> In order to comply with the PROFIdrive profile, PZD1 must be used as control word 1 (STW1) or status word 1 (ZSW1).
p2037 = 2 should be set if STW1 is not transferred with PZD1 as specified in the PROFIdrive profile.
<4> The maximum number of PZD words depends on the drive object type.

1	2	3	4	5	6	7	8
DO: CU_S110					fp_2424_98_eng.vsd	Function diagram	- 2424 -
PROFIdrive - Manufacturer-specific/free telegrams and Process Data					15.10.10 V04.04.03	SINAMICS S110	

Fig. 3-24 2424 – Manufacturer-specific/free telegrams and process data

PROFIdrive sampling time

Refer to [1020.7]

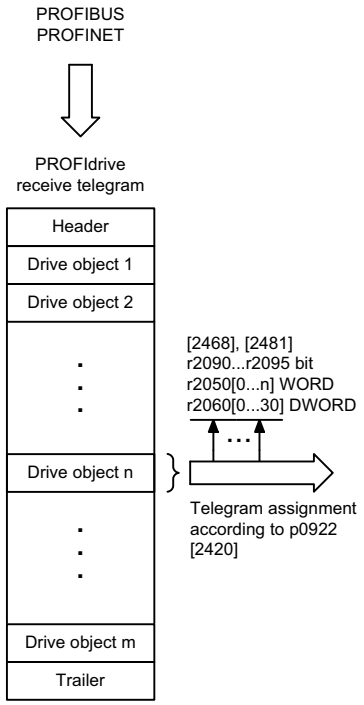

Signal receivers for PZD receive signals

Signal	Meaning	PROFIdrive Signal No.	<1> Interconnection parameter	Function diagram	<2> Data type	Normalization
STW1	Control word 1	1	(bit-by-bit)	[2442][2443] [2475]	U16	-
STW2	Control word 2	3	(bit-by-bit)	[2444] [2445]	U16	-
NSOLL_A	Speed setpoint A (16-bit)	5	p1070 (Erw. Soll.) p1155	[3030.2] [3080.4]	I16	4000 hex ≙ p2000
NSOLL_B	Speed setpoint B (32-bit)	7	p1070 (Erw. Soll.) p1155	[3030.2] [3080.4] [3090.8]	I32	4000 0000 hex ≙ p2000
G1_STW	Encoder 1 control word	9	p0480[0]	[4720]	U16	-
G2_STW	Encoder 2 control word	13	p0480[1]	[4720]	U16	-
A_DIGITAL	Digital output (16-bit)	22	(bit-by-bit)	[2497]	U16	-
SATZANW	Pos block selection	32	(bit-by-bit)	[2476]	I32	-
MDI_TARPOS	MDI position	34	p2642	[3618]	I32	1 hex ≙ 1 LU
MDI_VELOCITY	MDI velocity	35	p2643	[3618]	I32	1 hex ≙ 1000 LU/min
MDI_ACC	MDI acceleration override	36	p2644	[3618]	I16	4000 hex ≙ 100%
MDI_DEC	MDI deceleration override	37	p2645	[3618]	I16	4000 hex ≙ 100%
MDI_MOD	MDI mode	38	(bit-by-bit)			-

<1> When selecting a standard telegram or a manufacturer-specific telegram via p0922, these interconnection parameters of the command data set CDS0 are automatically set.
<2> Data type according to to the PROFIdrive profile: I16 = Integer16, I32 = Integer32, U16 = Unsigned16, U32 = Unsigned32.

1	2	3	4	5	6	7	8
DO: CU_S110, SERVO					fp_2439_98_eng.vsd	Function diagram	- 2439 -
PROFIdrive - PZD receive signals, connection of profile-specific					16.11.10 V04.04.03	SINAMICS S110	

Fig. 3-25 2439 – PZD receive signals, interconnection profile-specific

PROFIdrive sampling time
Refer to [1020.7]

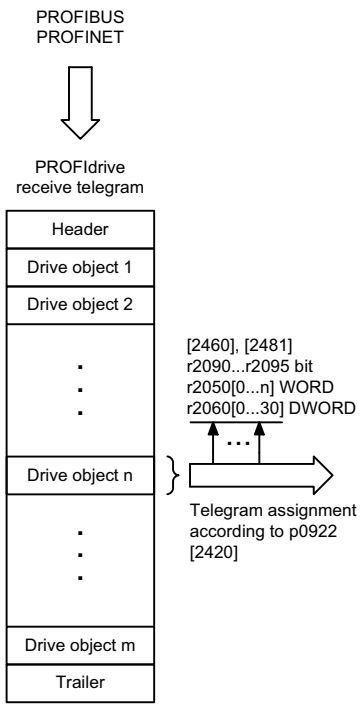

Signal receivers for PZD receive signals

Signal	Meaning	PROFIdrive Signal No.	<1> Interconnection parameter	Function diagram	<2> Data type	Normalization
MOMRED	Torque reduction	101	p1542	[5610.2]	I16	4000 hex ≙ p2003
MT_STW	Measuring probe control word	130	p0682	-	U16	
POS_STW	Pos control word	203	(bitwise)	[2462]	U16	
OVERRIDE	Pos velocity override	205	p2646	[3630]	I16	4000 hex ≙ 100%
POS_STW1	Pos control word 1	220	(bitwise)	[2463]	U16	
POS_STW2	Pos control word 2	222	(bitwise)	[2464]	U16	
MDI_MOD	Pos MDI mode	229	p2654	[3620]	U16	
CU_STW1	Control word 1 for Control Unit	500	(bitwise)	[2495]	U16	

<1> When selecting a standard telegram or a manufacturer-specific telegram via p0922, these interconnection parameters of the command data set CDS0 are automatically set.
<2> Data type according to to the PROFIdrive profile: I16 = Integer16, I32 = Integer32, U16 = Unsigned16, U32 = Unsigned32.

1	2	3	4	5	6	7	8
DO: CU_S110, SERVO					fp_2440_98_eng.vsd	Function diagram	- 2440 -
PROFIdrive - PZD receive signals interconnection manufacturer-specific					16.11.10 V04.04.03	SINAMICS S110	

Fig. 3-26 2440 – PZD receive signals interconnection, manufacturer-specific

Signal targets for STW1 in Interface Mode SINAMICS (p2038 = 0) <1>

PROFIdrive sampling time
Refer to [1020.7]

Signal	Meaning	Interconnection parameters	[Function diagram] internal control word	[Function diagram] signal target	Inverted
STW1.0	↑ ON (pulses can be enabled) **0 = OFF1** (braking with ramp-function generator, then pulse cancellation and ready-to-power-up)	p0840[0] = r2090.0	[2501.3]	[2610]	-
STW1.1	**1 = No OFF2** (enable is possible) 0 = OFF2 (immediate pulse cancellation and power-on inhibit)	p0844[0] = r2090.1	[2501.3]	[2610]	-
STW1.2	**1 = No OFF3** (enable possible) 0 = OFF3 (braking with the OFF3 ramp p1135, then pulse cancellation and power-on inhibit)	p0848[0] = r2090.2	[2501.3]	[2610]	-
STW1.3	**1 = Enable operation** (pulses can be enabled) 0 = Inhibit operation (cancel pulses)	p0852[0] = r2090.3	[2501.3]	[2610]	-
STW1.4	**1 = Operating condition** (the ramp-function generator can be enabled) 0 = Inhibit ramp-function generator (set the ramp-function generator output to zero)	p1140[0] = r2090.4	[2501.3]	[3060] [3070] [3080]	-
STW1.5	**1 = Enable the ramp-function generator** 0 = Stop the ramp-function generator (freeze the ramp-function generator output)	p1141[0] = r2090.5	[2501.3]	[3060] [3070]	-
STW1.6	**1 = Enable setpoint** 0 = Inhibit setpoint (set the ramp-function generator input to zero)	p1142[0] = r2090.6	[2501.3]	[3060] [3070] [3080]	-
STW1.7	↑ **= 1. Acknowledge faults**	p2103[0] = r2090.7	[2546.1]	[8060]	-
STW1.8	**Reserved**	-	-	-	-
STW1.9	**Reserved**	-	-	-	-
STW1.10	**1 = Control via PLC** <2>	p0854[0] = r2090.10	[2501.3]	[2501]	-
STW1.11	**1 = Setpoint inversion**	p1113[0] = r2090.11	[2505.3]	[3040]	-
STW1.12	**Reserved**	-	-	-	-
STW1.13	**1 = Motorized potentiometer setpoint raise**	p1035[0] = r2090.13	[2505.3]	[3020]	-
STW1.14	**1 = Motorized potentiometer setpoint lower**	p1036[0] = r2090.14	[2505.3]	[3020]	-
STW1.15	**Reserved**	-	-	-	-

<1> Used in telegrams 1, 2, 3, 4, 7, 9, 110, 111.
<2> STW1.10 must be set to ensure that the drive object accepts the process data (PZD).

1	2	3	4	5	6	7	8
DO: SERVO					fp_2442_98_eng.vsd	Function diagram	- 2442 -
PROFIdrive - STW1 control word interconnection (p2038 = 0)					08.12.10 V04.04.03	SINAMICS S110	

Fig. 3-27 2442 – STW1 control word interconnection (p2038 = 0)

PROFIdrive sampling time
Refer to [1020.7]

Signal targets for STW1 in Interface Mode SIMODRIVE 611 universal (p2038 = 1) <1>

Signal	Meaning	Interconnection parameters	[Function diagram] internal control word	[Function diagram] signal target	Inverted
STW1.0	↑ = ON (pulses can be enabled) **0 = OFF1** (braking with ramp-function generator, then pulse cancellation, ready-to-power-up)	p0840[0] = r2090.0	[2501.3]	[2610]	-
STW1.1	**1 = No OFF2** (enable is possible) 0 = OFF2 (immediate pulse cancellation and power-on inhibit)	p0844[0] = r2090.1	[2501.3]	[2610]	-
STW1.2	**1 = No OFF3** (enable possible) 0 = OFF3 (braking with the OFF3 ramp p1135, then pulse cancellation and power-on inhibit)	p0848[0] = r2090.2	[2501.3]	[2610]	-
STW1.3	**1 = Enable operation** (pulses can be enabled) 0 = Inhibit operation (cancel pulses)	p0852[0] = r2090.3	[2501.3]	[2610]	-
STW1.4	**1 = Operating condition** (the ramp-function generator can be enabled) 0 = Inhibit ramp-function generator (set the ramp-function generator output to zero)	p1140[0] = r2090.4	[2501.3]	[3060] [3070] [3080]	-
STW1.5	**1 = Enable the ramp-function generator** 0 = Stop the ramp-function generator (freeze the ramp-function generator output)	p1141[0] = r2090.5	[2501.3]	[3060] [3070]	-
STW1.6	**1 = Enable setpoint** 0 = Inhibit setpoint (set the ramp-function generator input to zero)	p1142[0] = r2090.6	[2501.3]	[3060] [3070] [3080]	-
STW1.7	↑ **= Acknowledge faults**	p2103[0] = r2090.7	[2546.1]	[8060]	-
STW1.8	**Reserved**	-	-	-	-
STW1.9	**Reserved**	-	-	-	-
STW1.10	**1 = Control via PLC** <2>	p0854[0] = r2090.10	[2501.3]	[2501]	-
STW1.11	**1 = Ramp-function generator active**	p2148[0] = r2090.11	-	[8010]	-
STW1.12	**1 = Unconditionally open the holding brake**	p0855[0] = r2090.12	[2501.3]	[2701]	-
STW1.13	**Reserved**	-	-	-	-
STW1.14	1 = Closed-loop torque control active **0 = Closed-loop speed control active**	p1501[0] = r2090.14	[2520.3]	[5060]	-
STW1.15	**Reserved**	-	-	-	-

<1> Used in telegrams 1, 2, 3, 4, 102, 103.
<2> STW1.10 must be set to ensure that the drive object accepts the process data (PZD).

1	2	3	4	5	6	7	8
DO: SERVO					fp_2443_98_eng.vsd	Function diagram	- 2443 -
PROFIdrive - STW1 control word interconnection (p2038 = 1)					17.10.08 V04.04.03	SINAMICS S110	

Fig. 3-28 2443 – STW1 control word interconnection (p2038 = 1)

Signal targets for STW2 in Interface Mode SINAMICS (p2038 = 0) <1>

PROFIdrive sampling time
Refer to [1020.7]

Signal	Meaning	Interconnection parameters	[Function diagram] internal control word	[Function diagram] signal target	Inverted
STW2.0	**Drive data set selection DDS, bit 0**	p0820[0] = r2093.0 <3> r2092.0	-	[8565]	-
STW2.1	**Drive data set selection DDS, bit 1**	p0821[0] = r2093.1 <3> r2092.1	-	[8565]	-
STW2.2	**Drive data set selection DDS, bit 2**	p0822[0] = r2093.2 <3> r2092.2	-	[8565]	-
STW2.3	**Drive data set selection DDS, bit 3**	p0823[0] = r2093.3 <3> r2092.3	-	[8565]	-
STW2.4	**Drive data set selection DDS, bit 4**	p0824[0] = r2093.4 <3> r2092.4	-	[8565]	-
STW2.5	**Reserved**	-	-	-	-
STW2.6	**Reserved**	-	-	-	-
STW2.7	**1 = Parking axis**	p0897 = r2093.7	-	-	-
STW2.8	**1 = Traverse to fixed endstop** <2>	p1545[0] = r2093.8	[2520.2]	[8012]	-
STW2.9	**Reserved**	-	-	-	-
STW2.10	**Reserved**	-	-	-	-
STW2.11	**1 = Motor changeover, feedback Signal**	p0828[0] = r2093.11	-	-	-
STW2.12	**Master sign-of-life, bit 0**	p2045 = r2050[3]	-	[2410]	-
STW2.13	**Master sign-of-life, bit 1**				
STW2.14	**Master sign-of-life, bit 2**				
STW2.15	**Master sign-of-life, bit 3**				

<1> Used in telegrams 2, 3, 4, 7, 9, 110 and 111. <2> Not for telegrams 9, 110, and 111. <3> Only for telegram 9.

1	2	3	4	5	6	7	8
DO: SERVO					fp_2444_98_eng.vsd	Function diagram	- 2444 -
PROFIdrive - STW2 control word interconnection (p2038 = 0)					02.03.11 V04.04.03	SINAMICS S110	

Fig. 3-29 2444 – STW2 control word interconnection (p2038 = 0)

PROFIdrive sampling time
Refer to [1020.7]

Signal targets for STW2 in Interface Mode SIMODRIVE 611 universal (p2038 = 1) <1>

Signal	Meaning	Interconnection parameters	[Function diagram] internal control word	[Function diagram] signal target	Inverted
STW2.0	**Drive data set selection DDS, bit 0**	p0820[0] = r2093.0	-	[8565]	-
STW2.1	**Reserved**	-	-	-	-
STW2.2	**Reserved**	-	-	-	-
STW2.3	**Reserved**	-	-	-	-
STW2.4	**1 = Bypass ramp-function generator** <3>	p1122[0] = r2093.4	-	[3060] [3070]	-
STW2.5	**Reserved**	-	-	-	-
STW2.6	**1 = Integrator inhibit, speed controller** <2>	p1477[0] = r2093.6	-	[5040] [5210]	-
STW2.7	**1 = Parking axis selection**	p0897 = r2093.7	-	-	-
STW2.8	**1 = Traverse to fixed endstop**	p1545[0] = r2093.8	[2520.2]	[8012]	-
STW2.9	**Reserved**	-	-	-	-
STW2.10	**Reserved**	-	-	-	-
STW2.11	**= Motor changeover, feedback signal**	p0828[0] = r2093.11	-	-	-
STW2.12	**Master sign-of-life, bit 0**	p2045 = r2050[3]	-	[2410]	-
STW2.13	**Master sign-of-life, bit 1**				
STW2.14	**Master sign-of-life, bit 2**				
STW2.15	**Master sign-of-life, bit 3**				

<1> Used in telegrams 2, 3, 4, 102, 103.
<2> For a 1 signal, the integral component of the speed controller is cleared and the integrator is inhibited.
<3> Only if the function module "extended setpoint channel" is active (r0108.8 = 1).

1	2	3	4	5	6	7	8
DO: SERVO					fp_2445_98_eng.vsd	Function diagram	- 2445 -
PROFIdrive - STW2 control word interconnection (p2038 = 1)					25.01.10 V04.04.03	SINAMICS S110	

Fig. 3-30 2445 – STW2 control word interconnection (p2038 = 1)

Signal sources for PZD send signals <1>

Signal	Description	PROFIdrive Signal No.	Interconnection parameter	Function diagram	Data type	Normalization
ZSW1	Status word 1	2	r2089[0]	[2452][2453][2479] <2>	U16	-
ZSW2	Status word 2	4	r2089[1]	[2454][2455] <2>	U16	-
NIST_A	Speed setpoint A (16 bit)	6	r0063	[4710]	I32 I16	4000 hex ≙ p2000 4000 0000 hex ≙ p2000
NIST_B	Speed setpoint B (32 bit)	8				
G1_ZSW	Encoder 1 status word	10	r0481[0]	[4730]	U16	
G1_XIST1	Encoder 1 actual position 1	11	r0482[0]	[4704]	U32	
G1_XIST2	Encoder 1 actual position 2	12	r0483[0]	[4704]	U32	
G2_ZSW	Encoder 2 status word	14	r0481[1]	[4730]	U16	
G2_XIST1	Encoder 2 actual position 1	15	r0482[1]	[4704]	U32	
G2_XIST2	Encoder 2 actual position 2	16	r0483[1]	[4704]	U32	
E_DIGITAL	Digital inputs	21	r2089[2]	[2459]	U16	
XIST_A	Position actual value A	28	r2521[0]	[4010]	I32	1 hex ≙ 1 LU
AKTSATZ	Pos selected block	33	r2670	[3650]	U16	

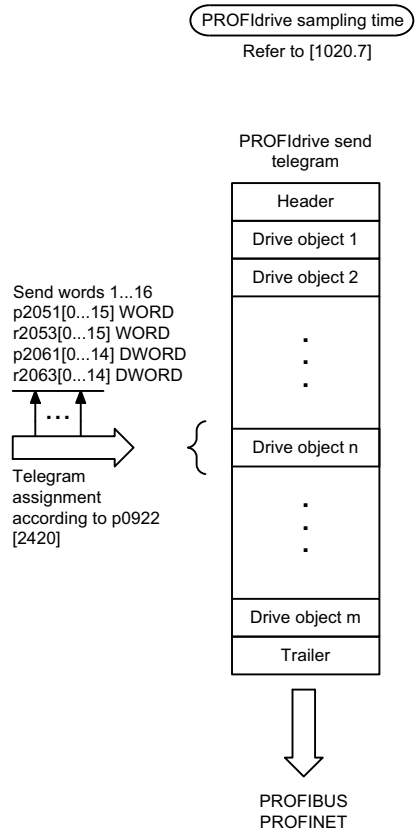

<1> Data type according to the PROFIdrive profile: I16 = Integer16, I32 = Integer32, U16 = Unsigned16, U32 = Unsigned32

1	2	3	4	5	6	7	8
DO: SERVO					fp_2449_98_eng.vsd	Function diagram	- 2449 -
PROFIdrive - PZD send signals connection profile-specific					16.11.10 V04.04.03	SINAMICS S110	

Fig. 3-31 2449 – PZD send signals interconnection, profile-specific

Fig. 3-32 2450 – PZD send signals interconnection, manufacturer-specific

Signal sources for PZD send signals <1>

Signal	Description	PROFIdrive Signal No.	Interconnection parameter	Function diagram	Data type	Normalization
MELDW	Message word	102	r2089[2]	[2456]	U16	-
MT_ZSW	Measuring probe status word	131	r0688	-	U16	-
MT1_ZS_F	Measuring probe 1 measuring time, falling edge	132	r0687[0]	-	U16	-
MT1_ZS_S	Measuring probe 1 measuring time, rising edge	133	r0686[0]	-	U16	-
MT2_ZS_F	Measuring probe 2 measuring time, falling edge	134	r0687[1]	-	U16	-
MT2_ZS_S	Measuring probe 2 measuring time, rising edge	135	r0686[1]	-	U16	-
POS_ZSW	Pos status word	204	r2683	[3645]	U16	-
POS_ZSW1	Pos status word 1	221	r2089[3]	[2466]	U16	-
POS_ZSW2	Pos status word 2	223	r2089[4]	[2467]	U16	-
FAULT_CODE	Fault code	301	r2131	[8060]	U16	-
WARN_CODE	Alarm code	303	r2132	[8065]	U16	-
CU_ZSW1	Status word 1 for Control Unit	501	r2089[1]	[2496]	U16	-

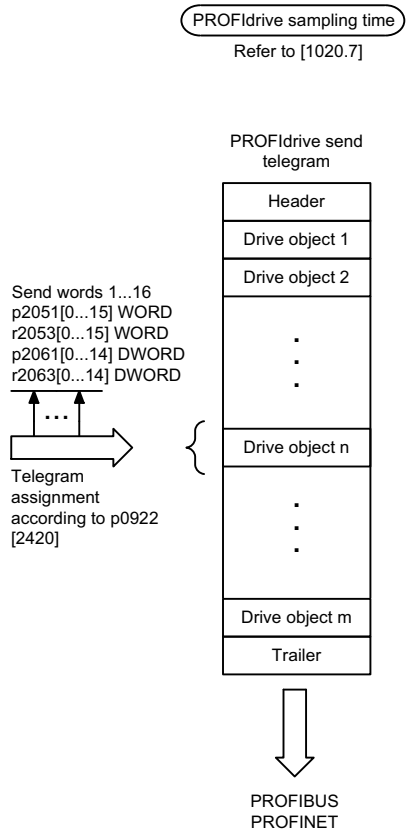

<1> Data type according to the PROFIdrive profile: I16 = Integer16, I32 = Integer32, U16 = Unsigned16, U32 = Unsigned32

1	2	3	4	5	6	7	8
DO: SERVO					fp_2450_98_eng.vsd	Function diagram	- 2450 -
PROFIdrive - PZD send signals interconnection manufacturer-specific					16.11.10 V04.04.03	SINAMICS S110	

Signal sources for ZSW1 im Interface Mode SINAMICS (p2038 = 0) <1>

PROFIdrive Abtastzeit
siehe [1020.7]

Signal	Meaning	Interconnection parameters	[Function diagram] Internal status word	[Function diagram] signal source	Inverted <2>
ZSW1.0	**1 = Ready to power-up**	p2080[0] = r0899.0	[2503.7]	[2610]	-
ZSW1.1	**1 = Ready to operate**	p2080[1] = r0899.1	[2503.7]	[2610]	-
ZSW1.2	**1 = Operation enabled**	p2080[2] = r0899.2	[2503.7]	[2610]	-
ZSW1.3	**1 = Fault present**	p2080[3] = r2139.3	[2548.7]	[8060]	-
ZSW1.4	**1 = No coast down active (OFF2 inactive)**	p2080[4] = r0899.4	[2503.7]	[2610]	-
ZSW1.5	**1 = No fast stop active (OFF3 inactive)**	p2080[5] = r0899.5	[2503.7]	[2610]	-
ZSW1.6	**1 = Power-on inhibit active**	p2080[6] = r0899.6	[2503.7]	[2610]	-
ZSW1.7	**1 = Alarm present**	p2080[7] = r2139.7	[2548.7]	[8065]	-
ZSW1.8	**1 = Speed setpoint - actual value deviation within tolerance t_off**	p2080[8] = r2197.7	[2534.7]	[8010]	-
ZSW1.9	**1 = Control requested** <3>	p2080[9] = r0899.9	[2503.7]	[2503]	-
ZSW1.10	**1 = f or n comparison value reached/exceeded**	p2080[10] = r2199.1	[2536.7]	[8010]	-
ZSW1.11	**1 = I, M, or P limit not reached**	p2080[11] = r1407.7	[2522.7]	[5610]	✔
ZSW1.12	**1 = Open holding brake**	p2080[12] = r0899.12	[2503.7]	[2701]	-
ZSW1.13	**1 = No motor overtemperature alarm**	p2080[13] = r2135.14	[2548.7]	[8016]	✔
ZSW1.14	**1 = Motor rotates forwards (n_act ≥ 0)** **0 = Motor rotates backwards (n_act < 0)**	p2080[14] = r2197.3	[2534.7]	[8010]	-
ZSW1.15	**1 = No alarm, thermal overload, power unit**	p2080[15] = r2135.15	[2548.7]	[8014]	✔

<1> Used in telegrams 1, 2, 3, 4, 7, 9, 110, 111.
<2> The ZSW1 is generated using the binector-connector converter (BI: p2080[0...15], inversion: p2088[0].0...p2088[0].15)
<3> The drive object is ready to accept data.

Fig. 3-33 2452 – ZSW1 status word interconnection (p2038 = 0)

1	2	3	4	5	6	7	8
DO: SERVO					fp_2452_98_eng.vsd	Function diagram	- 2452 -
PROFIdrive - ZSW1 status word interconnection (p2038 = 0)					17.10.08 V04.04.03	SINAMICS S110	

PROFIdrive sampling time
Refer to [1020.7]

Signal sources for ZSW1 in Interface Mode SIMODRIVE 611 universal (p2038 = 1) <1>

Signal	Meaning	Interconnection parameters	[Function diagram] Internal status word	[Function diagram] Signal source	Inverted
ZSW1.0	**1 = Ready to power-up**	p2080[0] = r0899.0	[2503.7]	[2610]	-
ZSW1.1	**1 = Ready to operate**	p2080[1] = r0899.1	[2503.7]	[2610]	-
ZSW1.2	**1 = Operation enabled**	p2080[2] = r0899.2	[2503.7]	[2610]	-
ZSW1.3	**1 = Fault present**	p2080[3] = r2139.3	[2548.7]	[8060]	-
ZSW1.4	**1 = No coast down active**	p2080[4] = r0899.4	[2503.7]	[2610]	-
ZSW1.5	**1 = No fast stop active**	p2080[5] = r0899.5	[2503.7]	[2610]	-
ZSW1.6	**1 = Power-on inhibit active**	p2080[6] = r0899.6	[2503.7]	[2610]	-
ZSW1.7	**1 = Alarm present**	p2080[7] = r2139.7	[2548.7]	[8065]	-
ZSW1.8	**1 = Speed setpoint - actual value deviation within tolerance t_off**	p2080[8] = r2197.7	[2534.7]	[8010]	-
ZSW1.9	**1 = Control requested** <2>	p2080[9] = r0899.9	[2503.7]	[2503]	-
ZSW1.10	**1 = f or n comparison value reached/exceeded**	p2080[10] = r2199.1	[2536.7]	[8010]	-
ZSW1.11	**1 = Alarm class bit 0**	p2080[11] = r2139.11	-	-	-
ZSW1.12	**1 = Alarm class bit 1**	p2080[12] = r2139.12	-	-	-
ZSW1.13	**Reserved**	-	-	-	-
ZSW1.14	**1 = Closed-loop torque control active**	p2080[14] = r1407.2	[2522.7]	[2522]	-
ZSW1.15	**Reserved**	-	-	-	-

<1> Used in telegrams 1, 2, 3, 4, 102, 103.
<2> The drive object is ready to accept data.

1	2	3	4	5	6	7	8
DO: SERVO					fp_2453_98_eng.vsd	Function diagram	- 2453 -
PROFIdrive - ZSW1 status word interconnection (p2038 = 1)					17.10.08 V04.04.03	SINAMICS S110	

Fig. 3-34 2453 – ZSW1 status word interconnection (p2038 = 1)

Signal sources for ZSW2 in Interface Mode SINAMICS (p2038 = 0) <1>

PROFIdrive sampling time
Refer to [1020.7]

	Signal	Meaning	Interconnection parameters	[Function diagram] internal status word	[Function diagram] signal source	Inverted
	ZSW2.0	**1 = Drive data set DDS effective, bit 0**	p2081[0] = r0051.0	-	[8565]	-
	ZSW2.1	**Reserved**	-	-	-	-
	ZSW2.2	**Reserved**	-	-	-	-
	ZSW2.3	**Reserved**	-	-	-	-
	ZSW2.4	**Reserved**	-	-	-	-
	ZSW2.5	**1 = Alarm class bit 0**	p2081[5] = r2139.11	-	-	-
	ZSW2.6	**1 = Alarm class bit 1**	p2081[6] = r2139.12	-	-	-
	ZSW2.7	**1 = Parking axis active**	p2081[7] = r0896.0	-	-	-
	ZSW2.8	**1 = Traverse to fixed endstop**	p2081[8] = r1406.8	-	[2520]	-
	ZSW2.9	**Reserved**	-	-	-	-
	ZSW2.10	**1 = Pulses enabled**	p2082[13] = r0899.11	-	-	-
	ZSW2.11	**1 = Motor data set changeover active**	p2081[11] = r0835.0	-	-	-
<2>	ZSW2.12	**Slave sign-of-life bit 0**	Implicitly interconnected	-	-	-
<2>	ZSW2.13	**Slave sign-of-life bit 1**				
<2>	ZSW2.14	**Slave sign-of-life bit 2**				
<2>	ZSW2.15	**Slave sign-of-life bit 3**				

<1> Used in telegrams 2, 3, 4, 7, 110, 111.
<2> These signals are automatically interconnected for clock-cycle synchronous operation.

1	2	3	4	5	6	7	8
DO: SERVO					fp_2454_98_eng.vsd	Function diagram	- 2454 -
PROFIdrive - ZSW2 status word interconnection (p2038 = 0)					25.01.10 V04.04.03	SINAMICS S110	

Fig. 3-35 2454 – ZSW2 status word interconnection (p2038 = 0)

PROFIdrive sampling time
Refer to [1020.7]

Signal sources for ZSW2 in Interface Mode SIMODRIVE 611 universal (p2038 = 1) <1>

	Signal	Meaning	Interconnection parameters	[Function diagram] Internal status word	[Function diagram] Signal source	Inverted <4>
	ZSW2.0	**1 = Drive data set DDS effective, bit 0**	p2081[0] = r0051.0	-	[8565]	-
	ZSW2.1	**Reserved**	-	-	-	-
	ZSW2.2	**Reserved**	-	-	-	-
	ZSW2.3	**Reserved**	-	-	-	-
	ZSW2.4	**1 = Ramp-function generator inactive** <3>	p2081[4] = r1199.2	-	[3060] [3080]	✔
	ZSW2.5	**1 = Holding brake open**	p2081[5] = r0899.12	[2503.7]	[2701]	-
	ZSW2.6	**1 = Integrator inhibit, speed controller**	p2081[6] = r2093.6	-	[5040] [5210]	-
	ZSW2.7	**1 = Parking axis active**	p2081[7] = r0896.0	-	-	-
	ZSW2.8	**1 = Traverse to fixed endstop**	p2081[8] = r1406.8	-	[2520]	-
	ZSW2.9	**Reserved**	-	-	-	-
	ZSW2.10	**Reserved**	-	-	-	-
	ZSW2.11	**1 = Data set changeover active**	p2081 [11] = r0835.0	-	-	-
<2>	ZSW2.12	**Slave sign-of-life bit 0**	Implicitly interconnected	-	-	-
<2>	ZSW2.13	**Slave sign-of-life bit 1**				
<2>	ZSW2.14	**Slave sign-of-life bit 2**				
<2>	ZSW2.15	**Slave sign-of-life bit 3**				

<1> Used in telegrams 2, 3, 4, 102, 103.
<2> These signals are automatically interconnected for clock-cycle synchronous operation.
<3> Only if the function module "extended setpoint channel" is active (r0108.8 = 1).
<4> The ZSW1 is generated using the binector-connector converter (BI: p2080[0...15], inversion: p2088[0].0...p2088[0].15)

1	2	3	4	5	6	7	8
DO: SERVO					fp_2455_98_eng.vsd	Function diagram	- 2455 -
PROFIdrive - ZSW2 status word interconnection (p2038 = 1)					25.01.10 V04.04.03	SINAMICS S110	

Fig. 3-36 2455 – ZSW2 status word interconnection (p2038 = 1)

PROFIdrive sampling time
Refer to [1020.7]

Signal sources for MELDW <1>

Signal	Meaning	Interconnection parameters	[Function diagram] Internal status word	[Function diagram] signal source	Inverted <2>
MELDW.0	**1 = Ramp-up/ramp-down completed 0 = Ramp-function generator active**	p2082[0] = r2199.5	[2537.7]	[8010]	-
MELDW.1	**1 = Torque utilization [%] < torque threshold value 2 (p2194)**	p2082[1] = r2199.11	[2537.7]	[8012]	-
MELDW.2	**1 = |n_act| < speed threshold value 3 (p2161)**	p2082[2] = r2199.0	[2537.7]	[8010]	-
MELDW.3	**1 = |n_act| □ speed threshold value 2 (p2155)**	p2082[3] = r2197.1	[2534.7]	[8010]	-
MELDW.4	**1 = Vdc_min controller activ (Vdc < p1248)**	p2082[4] = r0056.15	-	-	-
MELDW.5	**Variable signaling function**	p2082[5] = r3294	-	[5301]	-
MELDW.6	**1 = No motor overtemperature alarm**	p2082[6] = r2135.14	[2548.7]	[8016]	✔
MELDW.7	**1 = No alarm, thermal overload, power unit**	p2082[7] = r2135.15	[2548.7]	[8014]	✔
MELDW.8	**1 = Speed setpoint - actual value deviation within tolerance t_on**	p2082[8] = r2199.4	[2537.7]	[8010]	-
MELDW.9	**Reserved**	-	-	-	-
MELDW.10	**Reserved**	-	-	-	-
MELDW.11	**1 = Controller enable**	p2082[11] = r0899.8	[2503.7]	[2610]	-
MELDW.12	**1 = Drive ready**	p2082[12] = r0899.7	[2503.7]	[2610]	-
MELDW.13	**1 = Pulses enabled**	p2082[13] = r0899.11	[2503.7]	[2610]	-
MELDW.14	**Reserved**	-	-	-	-
MELDW.15	**Reserved**	-	-	-	-

<1> Used in telegrams 102, 103, 110 and 111.
<2> The status word is generated using the binector-connector converter p2088[2].

1	2	3	4	5	6	7	8
DO: SERVO					fp_2456_98_eng.vsd	Function diagram	- 2456 -
PROFIdrive - MELDW status word interconnection					08.12.10 V04.04.03	SINAMICS S110	

Fig. 3-37 2456 – MELDW status word interconnection

PROFIdrive sampling time
Refer to [1020.7]

Signal targets for POS_STW (positioning mode, r0108.4 = 1) <1>

Signal	Meaning	Interconnection parameters	[Function diagram] internal control word	[Function diagram] signal target	Inverted
POS_STW.0	**1 = Tracking mode active** 0 = No tracking mode active	p2655[0] = r2092.0	-	[3635]	-
POS_STW.1	**1 = Set home position** 0 = Do not set home position	p2596 = r2092.1	-	[3612]	-
POS_STW.2	**1 = Reference cam active**	p2612 = r2092.2	-	[3612]	-
POS_STW.3	**Reserved**	-	-	-	-
POS_STW.4	**Reserved**	-	-	-	-
POS_STW.5	**1 = Jogging, incremental active** 0 = Jogging, velocity active	p2591 = r2092.5	-	[3610]	-
POS_STW.6	**Reserved**	-	-	-	-
POS_STW.7	**Reserved**	-	-	-	-
POS_STW.8	**Reserved**	-	-	-	-
POS_STW.9	**Reserved**	-	-	-	-
POS_STW.10	**Reserved**	-	-	-	-
POS_STW.11	**Reserved**	-	-	-	-
POS_STW.12	**Reserved**	-	-	-	-
POS_STW.13	**Reserved**	-	-	-	-
POS_STW.14	**Reserved**	-	-	-	-
POS_STW.15	**Reserved**	-	-	-	-

<1> Used in telegram 110, 999.

1	2	3	4	5	6	7	8
DO: SERVO					fp_2462_98_eng.vsd	Function diagram	- 2462 -
PROFIdrive - POS_STW control word interconnection (r0108.4 = 1)					08.10.08 V04.04.03	SINAMICS S110	

Fig. 3-38 2462 – POS_STW positioning control word interconnection (r0108.4 = 1)

PROFIdrive Abtastzeit
siehe [1020.7]

Signal targets for POS_STW1 (positioning mode, r0108.4 = 1) <1>

Signal	Meaning	Interconnection parameters	[Function diagram] internal control word	[Function diagram] signal target	Inverted
POS_STW1.0	**Traversing block selection, bit 0**	p2625 = r2091.0	-	-	-
POS_STW1.1	**Traversing block selection, bit 1**	p2626 = r2091.1	-	-	-
POS_STW1.2	**Traversing block selection, bit 2**	p2627 = r2091.2	-	-	-
POS_STW1.3	**Traversing block selection, bit 3**	p2628 = r2091.3	-	-	-
POS_STW1.4	**Traversing block selection, bit 4**	p2629 = r2091.4	-	-	-
POS_STW1.5	**Traversing block selection, bit 5**	p2630 = r2091.5	-	-	-
POS_STW1.6	**Reserved**	-	-	-	-
POS_STW1.7	**Reserved**	-	-	-	-
POS_STW1.8	**1 = Absolute positioning is selected.** 0 = Relative positioning is selected.	p2648 = r2091.8	-	-	-
POS_STW1.9	**1 = Absolute positioning/MDI direction selection, positive.** **2 = Absolute positioning/MDI direction selection, negative.** **3 = Absolute positioning through the shortest distance.** **0 = Absolute positioning through the shortest distance.**	p2651 = r2091.9	-	-	-
POS_STW1.10		p2652 = r2091.10	-	-	-
POS_STW1.11	**Reserved**	-	-	-	-
POS_STW1.12	0 = Activate MDI block change with ↑ of a traversing task (STW1.6) **1 = Continuous transfer**	p2649 = r2091.12	-	-	-
POS_STW1.13	**Reserved**	-	-	-	-
POS_STW1.14	**1 = signal setting-up selected** 0 = signal positioning selected.	p2653 = r2091.14	-	-	-
POS_STW1.15	**1 = MDI selection**	p2647 = r2091.15	-	-	-

<1> Used in telegram 111.

Fig. 3-39 2463 – POS_STW1 positioning control word 1 interconnection (r0108.4 = 1)

1	2	3	4	5	6	7	8
DO: SERVO					fp_2463_98_eng.vsd	Function diagram	- 2463 -
PROFIdrive - POS_STW1-Pos control word 1 interconnection (r0108.4 = 1)					25.01.10 V04.04.03	SINAMICS S110	

PROFIdrive sampling time
Refer to [1020.7]

Signal targets for POS_STW2 (positioning mode, r0108.4 = 1) <1>

Signal	Meaning	Interconnection parameters	[Function diagram] internal control word	[Function diagram] signal target	Inverted
POS_STW2.0	**1 = Tracking mode active**	p2655 = r2092.0	-	[3635]	-
POS_STW2.1	**1 = Set reference point**	p2596 = r2092.1	-	[3612]	-
POS_STW2.2	**1 = Reference cam active**	p2612 = r2092.2	-	[3612]	-
POS_STW2.3	**Reserved**	-	-	-	-
POS_STW2.4	**Reserved**	-	-	-	-
POS_STW2.5	**1 = Jogging, incremental active** 0 = Jogging, velocity active	p2591 = r2092.5	-	[3610]	-
POS_STW2.6	**Reserved**	-	-	-	-
POS_STW2.7	**Reserved**	-	-	-	-
POS_STW2.8	**1 = Referencing type selection for flying referencing** 0 = Referencing type selection for search for reference	p2597 = r2092.8	-	-	-
POS_STW2.9	**1 = Start the search for reference in the negative direction** 0 = Start the search for reference in the positive direction.	p2604 = r2092.9	-	-	-
POS_STW2.10	**1 = Measuring probe 2 is activated** 0 = Measuring probe 1 is activated	p2510[0] = r2092.10	-	-	-
POS_STW2.11	**1 = Falling edge of the measuring probe** 0 = Rising edge of the measuring probe	p2511[0] = r2092.11	-	-	-
POS_STW2.12	**Reserved**	-	-	-	-
POS_STW2.13	**Reserved**	-	-	-	-
POS_STW2.14	**1 = Software limit switch activation**	p2582 = r2092.14	-	-	-
POS_STW2.15	**1 = STOP cam activ**	p2568 = r2092.15	-	-	-

<1> Used in telegram 111.

1	2	3	4	5	6	7	8
DO: SERVO					fp_2464_98_eng.vsd	Function diagram	- 2464 -
PROFIdrive - POS_STW2-POS control word 2 interconnection (r0108.4 = 1)					08.10.08 V04.04.03	SINAMICS S110	

Fig. 3-40 2464 – POS_STW2 positioning control word 2 interconnection (r0108.4 = 1)

PROFIdrive sampling time
Refer to [1020.7]

Signal targets for POS_ZSW1 (positioning mode, r0108.4 = 1) <1>

Signal	Meaning	Interconnection parameters	[Function diagram] internal control word	[Function diagram] signal target	Inverted
POS_ZSW1.0	**Active Traversing Block Bit 0 (2^0)**	p2083[0] = r2670[0]	-	-	-
POS_ZSW1.1	**Active Traversing Block Bit 1 (2^1)**	p2083[1] = r2670[1]	-	-	-
POS_ZSW1.2	**Active Traversing Block Bit 2 (2^2)**	p2083[2] = r2670[2]	-	-	-
POS_ZSW1.3	**Active Traversing Block Bit 3 (2^3)**	p2083[3] = r2670[3]	-	-	-
POS_ZSW1.4	**Active Traversing Block Bit 4 (2^4)**	p2083[4] = r2670[4]	-	-	-
POS_ZSW1.5	**Active Traversing Block Bit 5 (2^5)**	p2083[5] = r2670[5]	-	-	-
POS_ZSW1.6	**Reserved**	-	-	-	-
POS_ZSW1.7	**Reserved**	-	-	-	-
POS_ZSW1.8	**1 = STOP cam minus active**	p2083[08] = r2684[13]	-	-	-
POS_ZSW1.9	**1 = STOP cam plus aktiv**	p2083[09] = r2684[14]	-	-	-
POS_ZSW1.10	**1 = Jogging active**	p2083[10] = r2094[0]	-	-	-
POS_ZSW1.11	**1 = Reference point approach active**	p2083[11] = r2094[1]	-	-	-
POS_ZSW1.12	**1 = Flying referencing active**	p2083[12] = r2684[1]	-	-	-
POS_ZSW1.13	**1 = Traversing Block active**	p2083[13] = r2094[2]	-	-	-
POS_ZSW1.14	**1 = Set-up active**	p2083[14] = r2094[4]	-	-	-
POS_ZSW1.15	**1 = MDI active** 0 = MDI inactive	p2083[15] = r2670[15]	-	-	-

<1> Used in telegram 111.

Fig. 3-41 2466 – POS_ZSW1 positioning status word 1 interconnection (r0108.4 = 1)

1	2	3	4	5	6	7	8
DO: SERVO					fp_2466_98_eng.vsd	Function diagram	- 2466 -
PROFIdrive - POS_ZSW1-Pos status word 1 interconnection (r0108.4 = 1)					08.10.08 V04.04.03	SINAMICS S110	

PROFIdrive Abtastzeit
siehe [1020.7]

Signal targets for POS_ZSW2 (positioning mode, r0108.4 = 1) <1>

Signal	Meaning	Interconnection parameters	[Function diagram] internal control word	[Function diagram] signal target	Inverted
POS_ZSW2.0	**1 = Tracking mode active**	p2084[0] = r2683.0	-	-	-
POS_ZSW2.1	**1 = Velocity limiting active**	p2084[1] = r2683.1	-	-	-
POS_ZSW2.2	**1 = Setpoint available**	p2084[2] = r2683.2	-	-	-
POS_ZSW2.3	**1 = Printing matk outside outer window**	p2084[3] = r2684.3	-	-	-
POS_ZSW2.4	**1 = Axis moves forward**	p2084[4] = r2683.4	-	-	-
POS_ZSW2.5	**1 = Axis moves backwards**	p2084[5] = r2683.5	-	-	-
POS_ZSW2.6	**1 = Software limit switch minus reached**	p2084[6] = r2683.6	-	-	-
POS_ZSW2.7	**1 = Software limit switch plus reached**	p2084[7] = r2683.7	-	-	-
POS_ZSW2.8	**1 = Position actual value <= cam switching position 1**	p2084[8] = r2683.8	-	-	-
POS_ZSW2.9	**1 = Position actual value <= cam switching position 2**	p2084[9] = r2683.9	-	-	-
POS_ZSW2.10	**1 = Direct output 1 via traversing block**	p2084[10] = r2683.10	-	-	-
POS_ZSW2.11	**1 = Direct output 2 via traversing block**	p2084[11] = r2683.11	-	-	-
POS_ZSW2.12	**1 = Fixed stop reached**	p2084[12] = r2683.12	-	-	-
POS_ZSW2.13	**1 = Fixed stop clamping torque reached**	p2084[13] = r2683.13	-	-	-
POS_ZSW2.14	**1 = Travel to fixed stop active**	p2084[14] = r2683.14	-	-	-
POS_ZSW2.15	**1 = Traversing command active**	p2084[15] = r2684.15	-	-	-

<1> Verwendung in Telegramm 111.

1	2	3	4	5	6	7	8
DO: SERVO					fp_2467_98_eng.vsd	Function diagram	- 2467 -
PROFIdrive - POS_ZSW2-Pos status word 2 interconnection (r0108.4 = 1)					08.10.08 V04.04.03	SINAMICS S110	

Fig. 3-42 2467 – POS_ZSW2 positioning status word 2 interconnection (r0108.4 = 1)

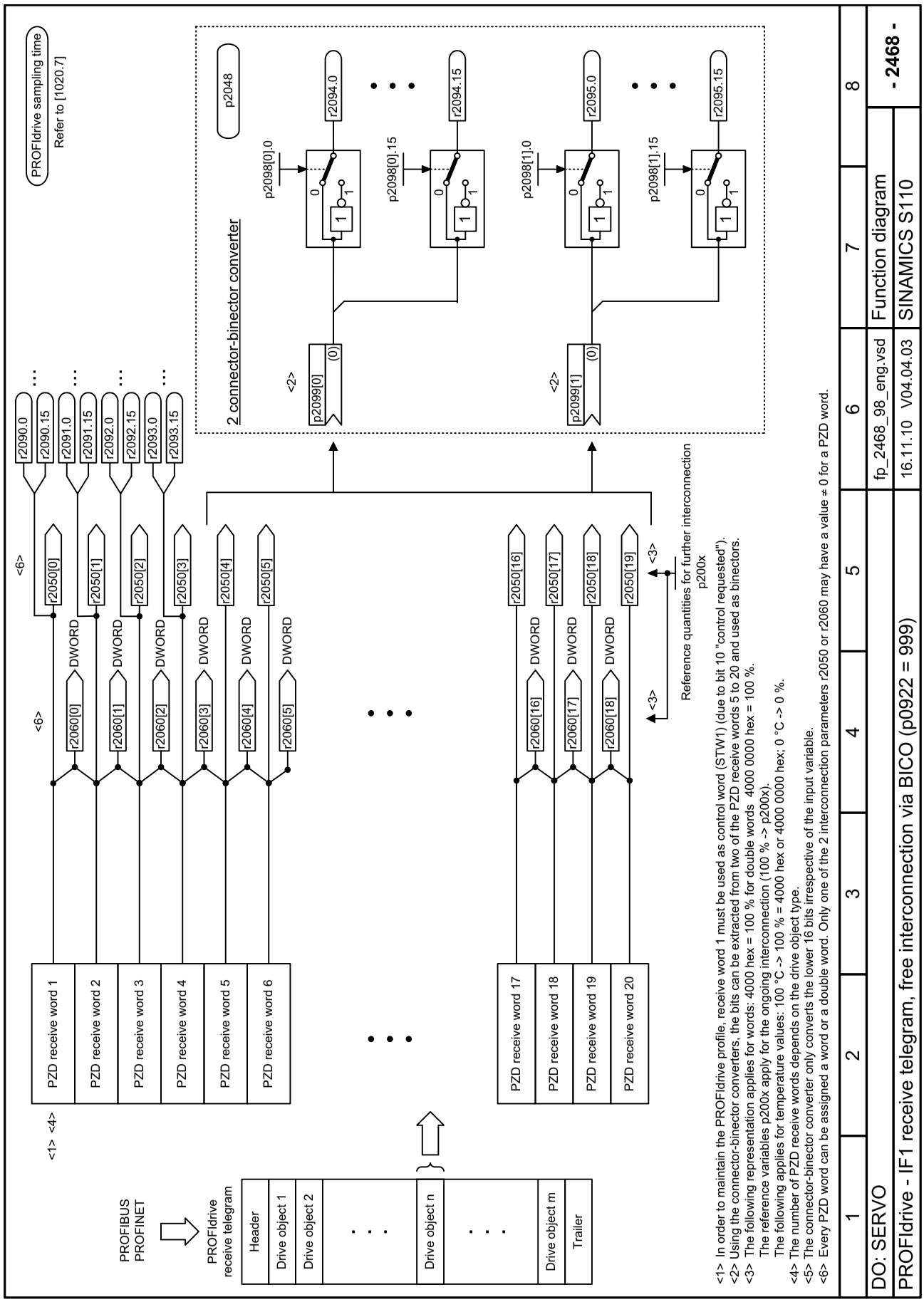

Fig. 3-43 2468 – IF1 receive telegram, free interconnection via BICO (p0922 = 999)

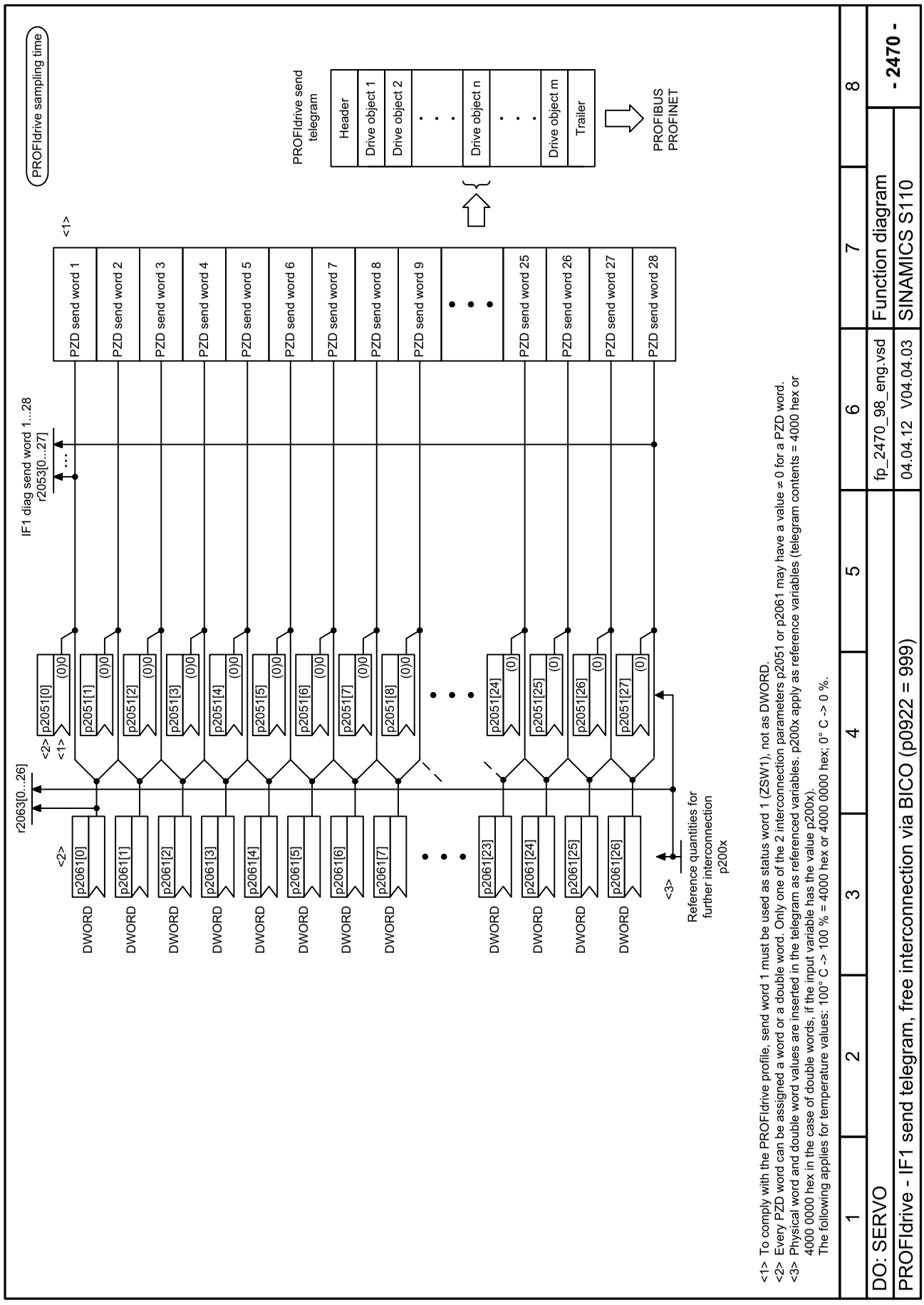

Fig. 3-44 2470 – IF1 send telegram, free interconnection via BICO (p0922 = 999)

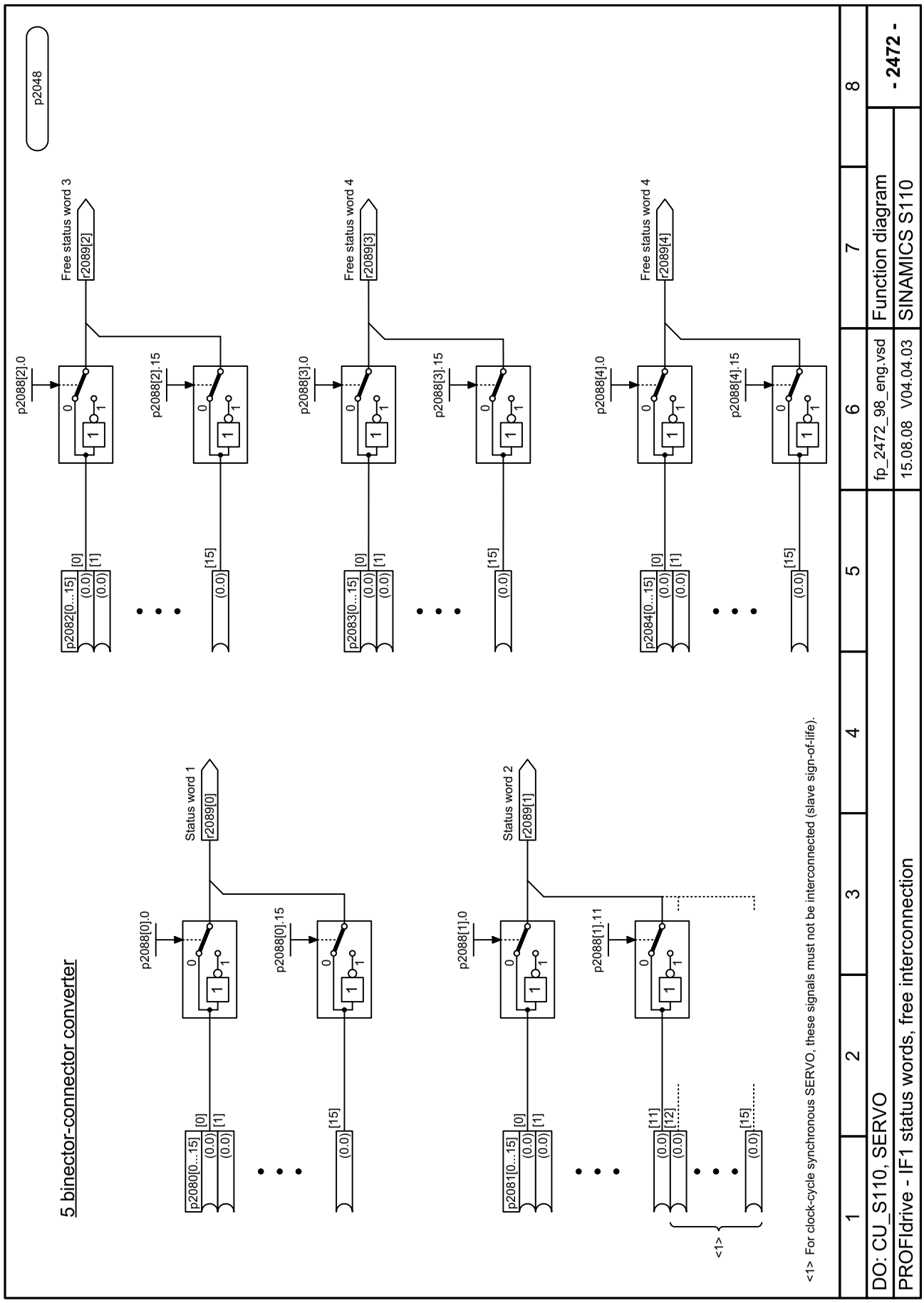

Fig. 3-45 2472 – IF1 status words, free interconnection

PROFIdrive sampling time
Refer to [1020.7]

Signal targets for STW1 (positioning mode, r0108.4 = 1) <1>

Signal	Meaning	Interconnection parameters	[Function diagram] internal control word	[Function diagram] signal target	Inverted
STW1.0	↑ = ON (pulses can be enabled) **0 = OFF1** (braking with ramp-funct. generator, then pulse cancellation and ready-to-power-up)	p0840[0] = r2090.0	[2501.3]	[2610]	-
STW1.1	**1 = No OFF2** (enable is possible) 0 = OFF2 (immediate pulse cancellation and power-on inhibit)	p0844[0] = r2090.1	[2501.3]	[2610]	-
STW1.2	**1 = No OFF3** (enable possible) 0 = OFF3 (braking with the OFF3 ramp p1135, then pulse cancellation and power-on inhibit)	p0848[0] = r2090.2	[2501.3]	[2610]	-
STW1.3	**1 = Enable operation** (pulses can be enabled) 0 = Inhibit operation (cancel pulses)	p0852[0] = r2090.3	[2501.3]	[2610]	-
STW1.4	**1 = Do not reject traversing task** 0 = Reject traversing task (ramp-down with the maximum deceleration)	p2641 = r2090.4	-	[3616.5] [3625]	-
STW1.5	**1 = No intermediate stop** 0 = Intermediate stop	p2640 = r2090.5	-	[3616.5] [3625]	-
STW1.6	↑ **= Activate traversing task**	<3> p2631 = r2090.6 p2650 = r2090.6	-	[3620.1] [3625]	-
STW1.7	↑ **= Acknowledge faults**	p2103[0] = r2090.7	[2546.1]	[8060]	-
STW1.8	**1 = Jog 1 signal source**	p2589 = r2090.8	-	[3610.1] [3625]	-
STW1.9	**1 = Jog 2 signal source**	p2590 = r2090.9	-	[3610.1] [3625]	-
STW1.10	**1 = Control via PLC** <2>	p0854[0] = r2090.10	[2501.3]	[2501]	-
STW1.11	**1 = Start homing** 0 = Stop homing	p2595 = r2090.11	-	[3612.1] [3625]	-
STW1.12	**Reserved**	-	-	-	-
STW1.13	↑ **= External block change**	p2633 = r2090.13	-	[3615]	-
STW1.14	**Reserved**	-	-	-	-
STW1.15	**Reserved**	-	-	-	-

<1> Used in telegrams 7, 9, 110, 111.
<2> STW1.10 must be set to ensure that the drive object accepts the process data (PZD).
<3> The interconnection p2649 = 0 is made additionally only in Telegram 7,9 and 110.

1	2	3	4	5	6	7	8
DO: SERVO					fp_2475_98_eng.vsd	Function diagram	- 2475 -
PROFIdrive - STW1 control word 1 interconnection (r0108.4 = 1)					25.01.10 V04.04.03	SINAMICS S110	

Fig. 3-46 2475 – STW1 control word 1 interconnection (r0108.4 = 1)

PROFIdrive sampling time
Refer to [1020.7]

Signal targets for SATZANW (positioning mode, r0108.4 = 1) <1>

Signal	Meaning	Interconnection parameters	[Function diagram] internal control word	[Function diagram] signal target	Inverted
SATZANW.0	**1 = Traversing block selection, bit 0**	p2625 = r2091.0	-	[3640]	-
SATZANW.1	**1 = Traversing block selection, bit 1**	p2626 = r2091.1	-	[3640]	-
SATZANW.2	**1 = Traversing block selection, bit 2**	p2627 = r2091.2	-	[3640]	-
SATZANW.3	**1 = Traversing block selection, bit 3**	p2628 = r2091.3	-	[3640]	-
SATZANW.4	**1 = Traversing block selection, bit 4**	p2629 = r2091.4	-	[3640]	-
SATZANW.5	**1 = Traversing block selection, bit 5**	p2630 = r2091.5	-	[3640]	-
SATZANW.6	**Reserved**	-	-	-	-
SATZANW.7	**Reserved**	-	-	-	-
SATZANW.8	**Reserved**	-	-	-	-
SATZANW.9	**Reserved**	-	-	-	-
SATZANW.10	**Reserved**	-	-	-	-
SATZANW.11	**Reserved**	-	-	-	-
SATZANW.12	**Reserved**	-	-	-	-
SATZANW.13	**Reserved**	-	-	-	-
SATZANW.14	**Reserved**	-	-	-	-
SATZANW.15	**1 = Activate MDI** 0 = Deactivate MDI	p2647 = r2091.15	-	[3625] [3640]	-

<1> Used in telegrams 7, 9 und 110.

1	2	3	4	5	6	7	8
DO: SERVO					fp_2476_98_eng.vsd	Function diagram	- 2476 -
PROFIdrive - SATZANW Block Selection interconnection (r0108.4 = 1)					25.01.10 V04.04.03	SINAMICS S110	

Fig. 3-47 2476 – SATZANW block selection interconnection (r0108.4 = 1)

PROFIdrive sampling time
Refer to [1020.7]

Signal sources for ZSW1 (positioning mode, r0108.4 = 1) <1>

Signal	Meaning	Interconnection parameters	[Function diagram] Internal status word	[Function diagram] signal source	Inverted
ZSW1.0	**1 = Ready to power-up**	p2080[0] = r0899.0	[2503.7]	[2610]	-
ZSW1.1	**1 = Ready to operate** (DC link loaded, pulses blocked)	p2080[1] = r0899.1	[2503.7]	[2610]	-
ZSW1.2	**1 = Operation enabled** (drive follows n_set)	p2080[2] = r0899.2	[2503.7]	[2610]	-
ZSW1.3	**1 = Fault present**	p2080[3] = r2139.3	[2548.7]	[8060]	-
ZSW1.4	**1 = No coast down active (OFF2 inactive)**	p2080[4] = r0899.4	[2503.7]	[2610]	-
ZSW1.5	**1 = No fast stop active (OFF3 inactive)**	p2080[5] = r0899.5	[2503.7]	[2610]	-
ZSW1.6	**1 = Power-on inhibit active**	p2080[6] = r0899.6	[2503.7]	[2610]	-
ZSW1.7	**1 = Alarm present**	p2080[7] = r2139.7	[2548.7]	[8065]	-
ZSW1.8	**1 = Following error within tolerance**	p2080[8] = r2684.8	[3646.7]	[4025]	-
ZSW1.9	**1 = Control requested** <2>	p2080[9] = r0899.9	[2503.7]	[2503]	-
ZSW1.10	**1 = Target position reached**	p2080[10] = r2684.10	[3646.7]	[4020] [3625]	-
ZSW1.11	**1 = Home position set**	p2080[11] = r2684.11	[3646.7]	[3612] [3614]	-
ZSW1.12	**= Acknowledgment traversing block activated**	p2080[12] = r2684.12	[3646.7]	[3616] [3620]	-
ZSW1.13	**1 = |n_act| < speed threshold value 3**	p2080[13] = r2199.0	[2537.7]	[8010] [3625]	-
ZSW1.14	**1 = Axis accelerated** <3>	p2080[14] = r2684.4	[3646.7]	[3635]	-
ZSW1.15	**1 = Axis decelerated** <3>	p2080[15] = r2684.5	[3646.7]	[3635]	-

<1> Used in telegrams 7, 9, 110, 111.

<2> The drive object is ready to accept data.
<3> Only for telegram 111.

1	2	3	4	5	6	7	8
DO: SERVO					fp_2479_98_eng.vsd	Function diagram	- 2479 -
PROFIdrive - ZSW1-Status Word 1 interconnection (r0108.4 = 1)					25.01.10 V04.04.03	SINAMICS S110	

Fig. 3-48 2479 – ZSW1 status word 1 interconnection (r0108.4 = 1)

PROFIdrive sampling time
Refer to [1020.7]

Signal targets for MDI_MOD (positioning mode, r0108.4 = 1) <1>

Signal	Meaning	Interconnection parameters	[Function diagram] internal control word	[Function diagram] signal target	Inverted
MDI_MOD.0	**1 = Absolute positioning is selected** 0 = Relative positioning is selected	p2648 = r2094.0	-	-	-
MDI_MOD.1	0 = Absolute positioning through the shortest distance 1 = Absolute positioning in the positive direction 2 = Absolute positioning in the negative direction 3 = Absolute positioning through the shortest distance	p2651 = r2094.1	-	-	-
MDI_MOD.2		p2652 = r2094.2	-	-	-
MDI_MOD.3	**Reserved**	-	-	-	-
MDI_MOD.4	**Reserved**	-	-	-	-
MDI_MOD.5	**Reserved**	-	-	-	-
MDI_MOD.6	**Reserved**	-	-	-	-
MDI_MOD.7	**Reserved**	-	-	-	-
MDI_MOD.8	**Reserved**	-	-	-	-
MDI_MOD.9	**Reserved**	-	-	-	-
MDI_MOD.10	**Reserved**	-	-	-	-
MDI_MOD.11	**Reserved**	-	-	-	-
MDI_MOD.12	**Reserved**	-	-	-	-
MDI_MOD.13	**Reserved**	-	-	-	-
MDI_MOD.14	**Reserved**	-	-	-	-
MDI_MOD.15	**Reserved**	-	-	-	-

<1> Used in telegram 9.

1	2	3	4	5	6	7	8
DO: SERVO					fp_2480_98_eng.vsd	Function diagram	- 2480 -
PROFIdrive - MDI_MOD-MDI Mode interconnection (r0108.4 = 1)					30.04.09 V04.04.03	SINAMICS S110	

Fig. 3-49 2480 – MDI_MOD-MDI mode interconnection (r0108.4 = 1)

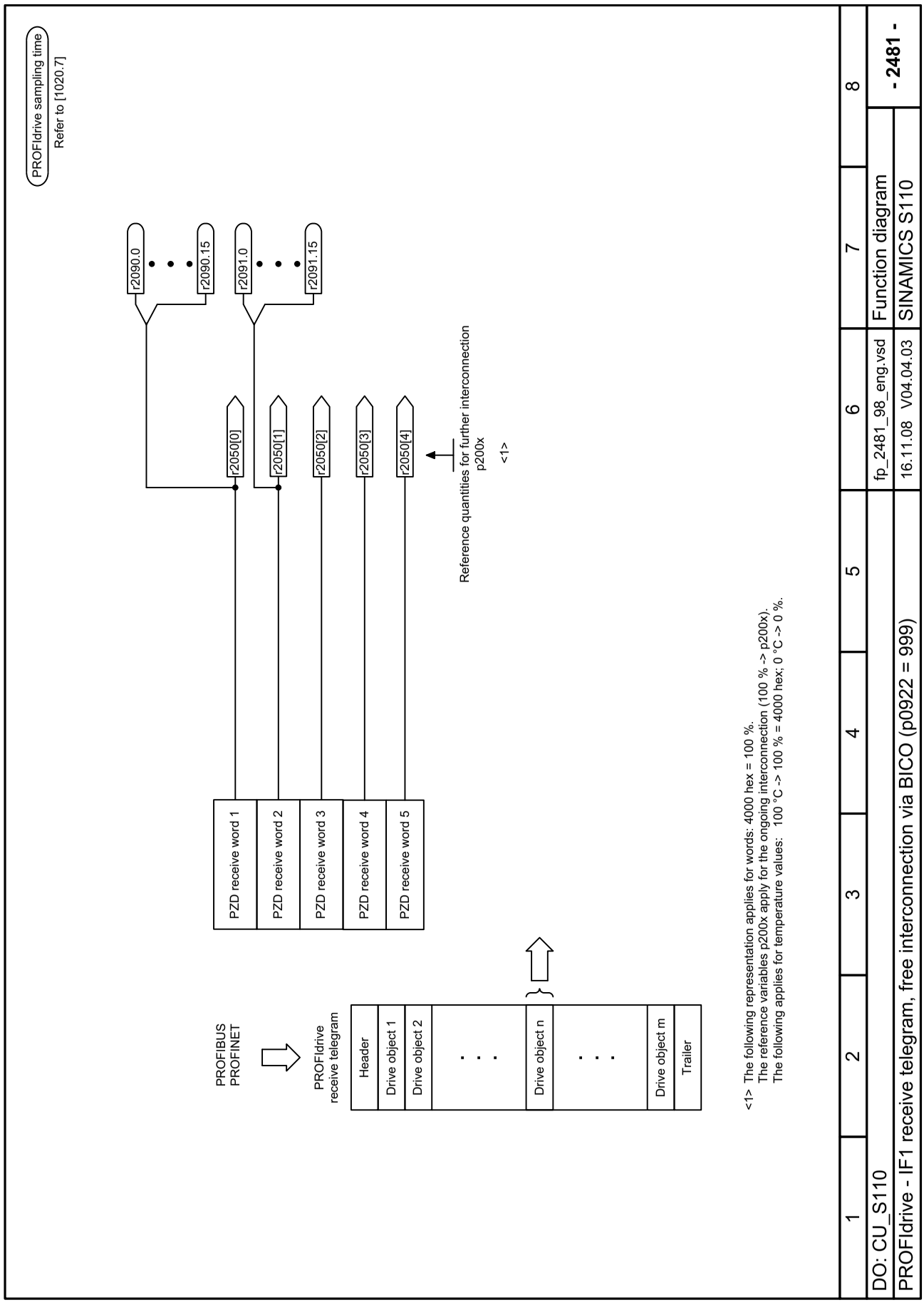

Fig. 3-50 2481 – IF1 receive telegram, free interconnection via BICO (p0922 = 999)

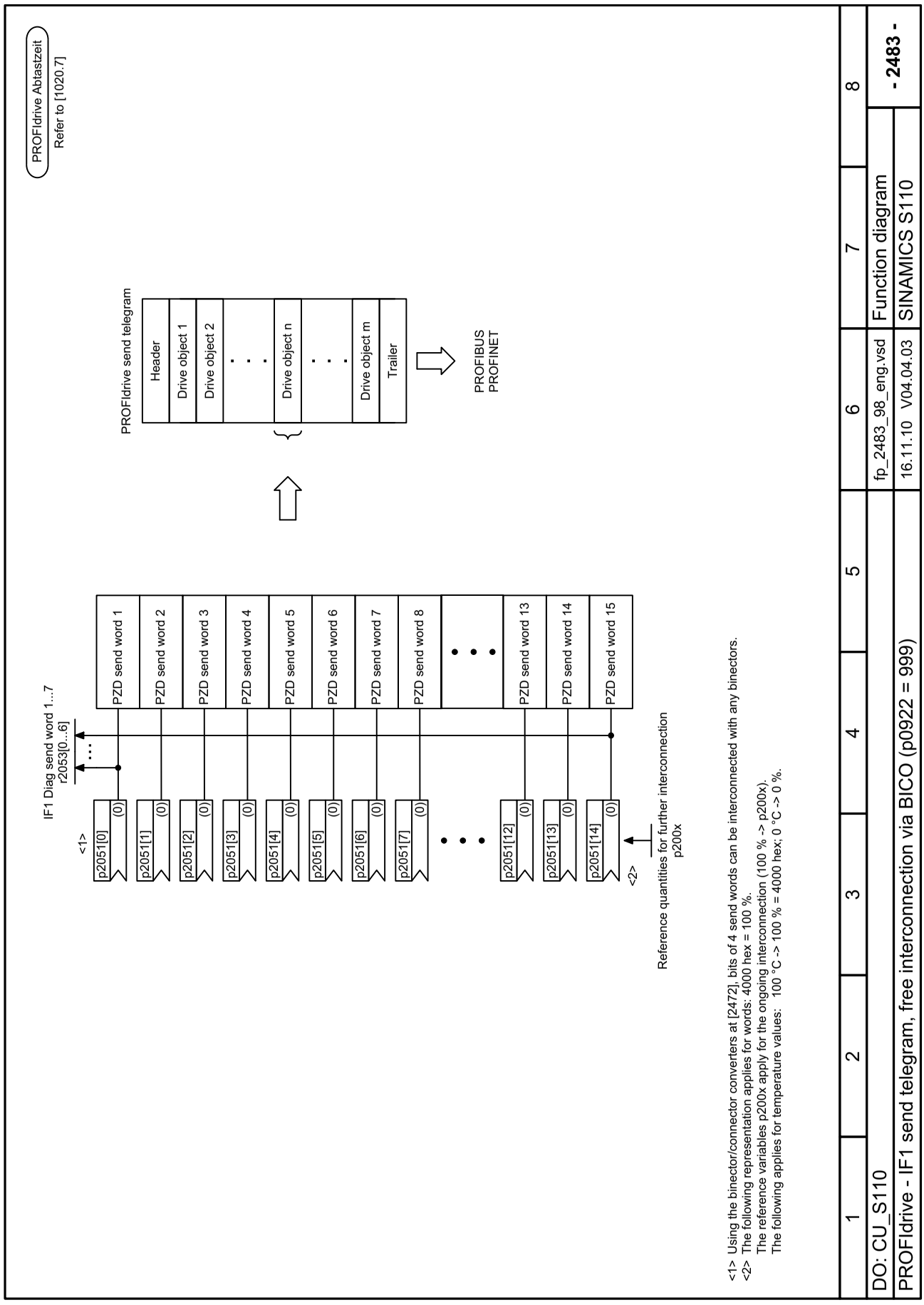

Fig. 3-51 2483 – IF1 send telegram, free interconnection via BICO (p0922 = 999)

PROFIdrive sampling time
Refer to [1020.7]

Signal targets for CU_STW1 <1>

Signal	Meaning	Interconnection parameters	[Function diagram] internal control word	[Function diagram] signal target	Inverted
CU_STW.0	**Central measuring probe, synchronizing signal source**	p0681[0] = r2090.0	-	-	-
CU_STW.1	**RTC real time synchronization PING**	p3104 = r2090.1	-	-	-
CU_STW.2	**Reserved**	-	-	-	-
CU_STW.3	**Reserved**	-	-	-	-
CU_STW.4	**Reserved**	-	-	-	-
CU_STW.5	**Reserved**	-	-	-	-
CU_STW.6	**Reserved**	-	-	-	-
CU_STW.7	**= 1. Acknowledge faults**	p2103[0] = r2090.7	-	-	-
CU_STW.8	**Reserved**	-	-	-	-
CU_STW.9	**Reserved**	-	-	-	-
CU_STW.10	**Master control by PLC**	p3116 = r2090.10	-	-	-
CU_STW.11	**Reserved**	-	-	-	-
CU_STW.12	**Master sign-of-life bit 0**	p2045 =r2050[3]	-	-	-
CU_STW.13	**Master sign-of-life bit 1**				
CU_STW.14	**Master sign-of-life bit 2**				
CU_STW.15	**Master sign-of-life bit 3**				

<1> Used in telegrams 390 and 391.

1	2	3	4	5	6	7	8
DO: CU_S110					fp_2495_98_eng.vsd	Function diagram	- 2495 -
PROFIdrive - CU_STW1 control word Control Unit interconnection					24.09.10 V04.04.03	SINAMICS S110	

Fig. 3-52 2495 – CU_STW1 control word, Control Unit interconnection

PROFIdrive sampling time
Refer to [1020.7]

Signal sources for CU_ZSW1 <1>

Signal	Meaning	Interconnection parameters	[Function diagram] Internal status word	[Function diagram] signal source	Inverted <2>
CU_ZSW1.0	**Reserved**	-	-	-	-
CU_ZSW1.1	**Reserved**	-	-	-	-
CU_ZSW1.2	**Reserved**	-	-	-	-
CU_ZSW1.3	**1 = Fault present**	p2081[3] = r2139.3	-	-	-
CU_ZSW1.4	**Reserved**	-	-	-	-
CU_ZSW1.5	**Reserved**	-	-	-	-
CU_ZSW1.6	**Reserved**	-	-	-	-
CU_ZSW1.7	**1 = Alarm present**	p2081[7] = r2139.7	-	-	-
CU_ZSW1.8	**1 = System time synchronized**	p2081[8] = r0899.8	-	-	-
CU_ZSW1.9	**1 = Alarm is not present**	p2081[9] = r3114.9	-	-	✔
CU_ZSW1.10	**1 = Fault not present**	p2081[10] = r3114.10	-	-	✔
CU_ZSW1.11	**1 = Safety-Message/signal not present**	p2081[11] = r3114.11	-	-	✔
CU_ZSW1.12	**Slave sign-of-life bit 0**	Implicitly interconnected	-	-	-
CU_ZSW1.13	**Slave sign-of-life bit 1**				
CU_ZSW1.14	**Slave sign-of-life bit 2**				
CU_ZSW1.15	**Slave sign-of-life bit 3**				

<1> Used in telegrams 390 and 391.
<2> The ZSW1 is generated using the binector-connector converter (BI: p2080[0...15], inversion: p2088[0].0...p2088[0].15)

1	2	3	4	5	6	7	8
DO: CU_S110					fp_2496_98_eng.vsd	Function diagram	- 2496 -
PROFIdrive - CU_ZSW1 status word 1 Control Unit interconnection					25.01.10 V04.04.03	SINAMICS S110	

Fig. 3-53 2496 – CU_ZSW1 status word, Control Unit interconnection

PROFIdrive sampling time
Refer to [1020.7]

Signal targets for A_DIGITAL <1>

Signal	Meaning		Interconnection parameters <3>	[Function diagram] internal status word	[Function diagram] signal target	Inverted
A_DIGITAL.0	**Digital output 8 (DI/DO 8)**	<2>	p0738[0] = r2091.0	-	-	-
A_DIGITAL.1	**Digital output 9 (DI/DO 9)**	<2>	p0739[0] = r2091.1	-	-	-
A_DIGITAL.2	**Digital output 10 (DI/DO 10)**	<2>	p0740[0] = r2091.2	-	-	-
A_DIGITAL.3	**Digital output 11 (DI/DO 11)**	<2>	p0741[0] = r2091.3	-	-	-
A_DIGITAL.4	**Reserved**		-	-	-	-
A_DIGITAL.5	**Reserved**		-	-	-	-
A_DIGITAL.6	**Reserved**		-	-	-	-
A_DIGITAL.7	**Reserved**		-	-	-	-
A_DIGITAL.8	**Digital output 16 (DO 16)**	<4>	p0746[0] = r2091.8	-	-	-
A_DIGITAL.9	**Reserved**		-	-	-	-
A_DIGITAL.10	**Reserved**		-	-	-	-
A_DIGITAL.11	**Reserved**		-	-	-	-
A_DIGITAL.12	**Reserved**		-	-	-	-
A_DIGITAL.13	**Reserved**		-	-	-	-
A_DIGITAL.14	**Reserved**		-	-	-	-
A_DIGITAL.15	**Reserved**		-	-	-	-

<1> Used in telegrams 390, 391, 392, 393 and 394. <2> Can be set via p0728 as input (DI) or output (DO). <3> Pre-assignment, can be freely changed. <4> For restrictions, refer to p0746.

1	2	3	4	5	6	7	8
DO: CU_S110					fp_2497_98_eng.vsd	Function diagram	- 2497 -
PROFIdrive - A_DIGITAL interconnection					18.10.10 V04.04.03	SINAMICS S110	

Fig. 3-54 2497 – A_DIGITAL interconnection

PROFIdrive sampling time
Refer to [1020.7]

Signal targets for E_DIGITAL <1>

Signal	Meaning	Interconnection parameters <3>	[Function diagram] Internal status word	[Function diagram] signal target	Inverted
E_DIGITAL.0	**Digital input 8 (DI/DO 8)** <2>	p2082[0] = r0722.8	-	-	-
E_DIGITAL.1	**Digital input 9 (DI/DO 9)** <2>	p2082[1] = r0722.9	-	-	-
E_DIGITAL.2	**Digital input 10 (DI/DO 10)** <2>	p2082[2] = r0722.10	-	-	-
E_DIGITAL.3	**Digital input 11 (DI/DO 11)** <2>	p2082[3] = r0722.11	-	-	-
E_DIGITAL.4	**Reserved**	-	-	-	-
E_DIGITAL.5	**Reserved**	-	-	-	-
E_DIGITAL.6	**Reserved**	-	-	-	-
E_DIGITAL.7	**Reserved**	-	-	-	-
E_DIGITAL.8	**Digital input 0 (DI 0)**	p2082[8] = r0722.0	-	-	-
E_DIGITAL.9	**Digital input 1 (DI 1)**	p2082[9] = r0722.1	-	-	-
E_DIGITAL.10	**Digital input 2 (DI 2)**	p2082[10] = r0722.2	-	-	-
E_DIGITAL.11	**Digital input 3 (DI 3)**	p2082[11] = r0722.3	-	-	-
E_DIGITAL.12	**Reserved**	-	-	-	-
E_DIGITAL.13	**Reserved**	-	-	-	-
E_DIGITAL.14	**Reserved**	-	-	-	-
E_DIGITAL.15	**Reserved**	-	-	-	-

<1> Used in telegrams 390, 391, 392, 393 and 394.
<2> Can be set via p0728 as input (DI) or output (DO).
<3> Pre-assignment, can be freely changed.

1	2	3	4	5	6	7	8
DO: CU_S110					fp_2498_98_eng.vsd	Function diagram	- 2498 -
PROFIdrive - E_DIGITAL interconnection					18.10.10 V04.04.03	SINAMICS S110	

Fig. 3-55 2498 – E_DIGITAL interconnection

3.6 Internal control/status words

Function block diagrams

2501 – Control word, sequence control	778
2503 – Status word, sequence control	779
2505 – Control word, setpoint channel	780
2520 – Control word, speed controller	781
2522 – Status word, speed controller	782
2526 – Status word, closed-loop control	783
2530 – Status word, closed-loop current control	784
2534 – Status word, monitoring functions 1	785
2536 – Status word, monitoring functions 2	786
2537 – Status word, monitoring functions 3	787
2546 – Control word, faults/alarms	788
2548 – Status word, faults/alarms 1 and 2	789

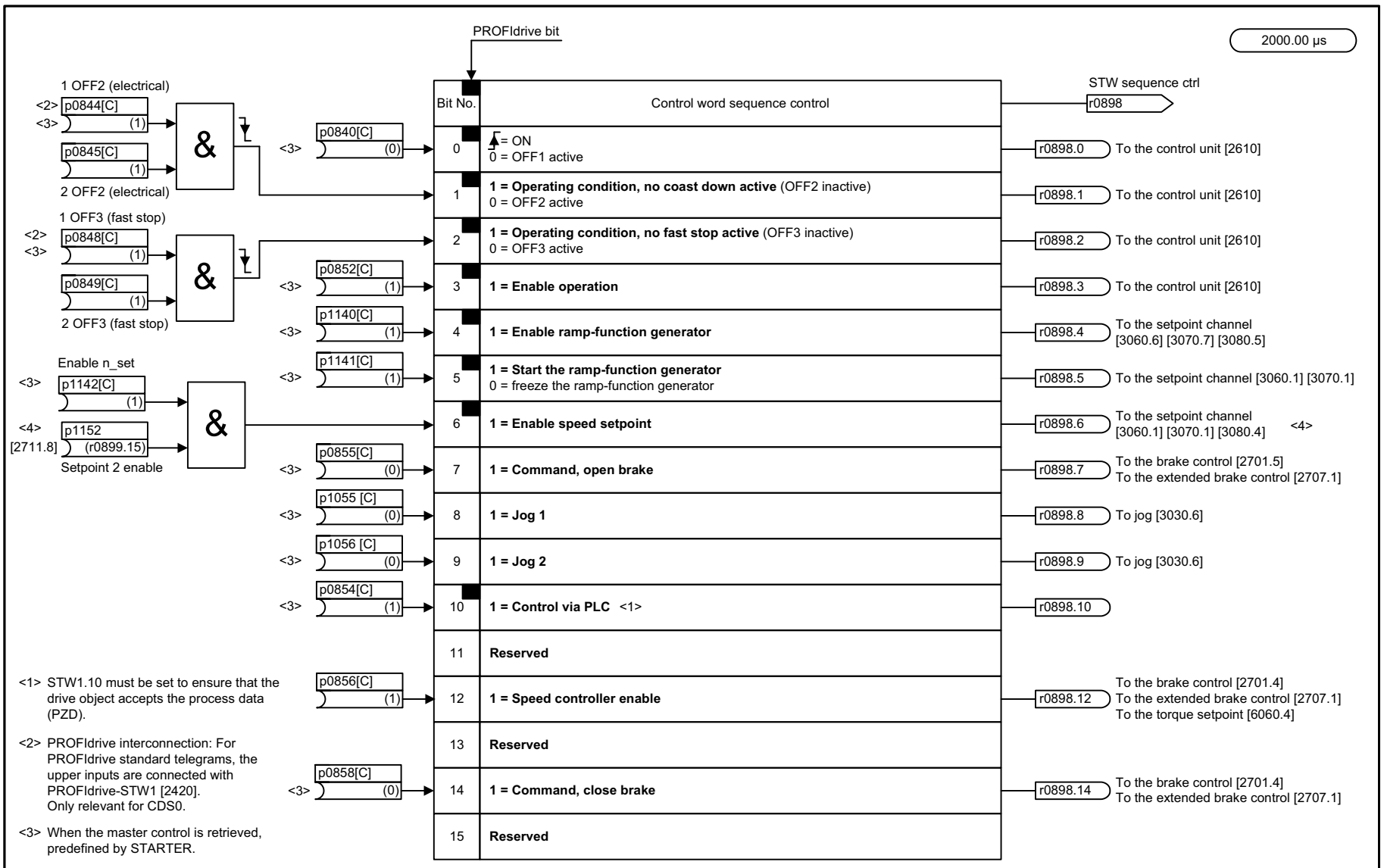

1	2	3	4	5	6	7	8
DO: SERVO					fp_2501_98_eng.vsd	Function diagram	- 2501 -
Internal control/status words - Control word, sequence control					31.10.08 V04.04.03	SINAMICS S110	

Fig. 3-56 2501 – Control word, sequence control

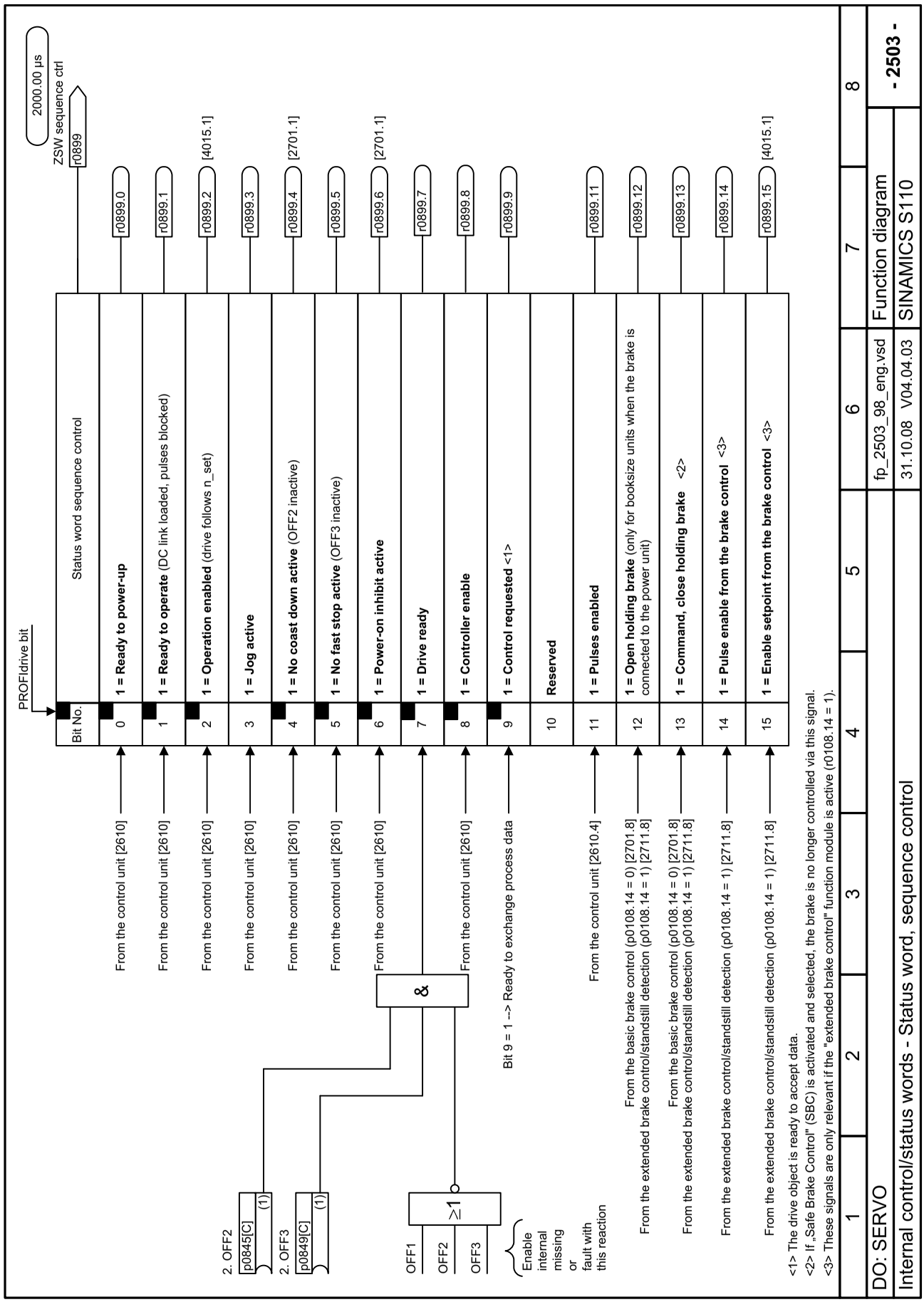

Fig. 3-57 2503 – Status word, sequence control

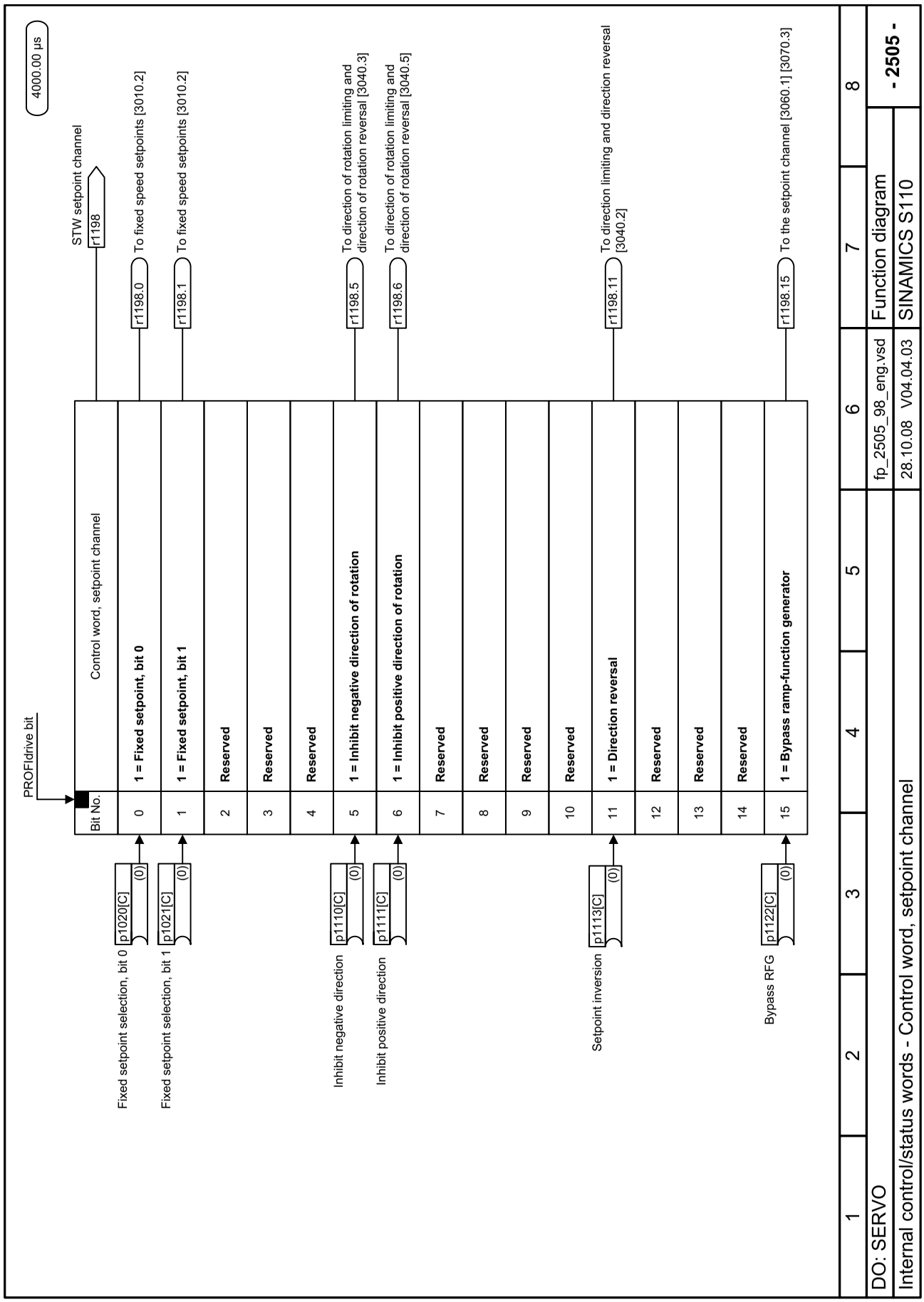

Fig. 3-58 2505 – Control word, setpoint channel

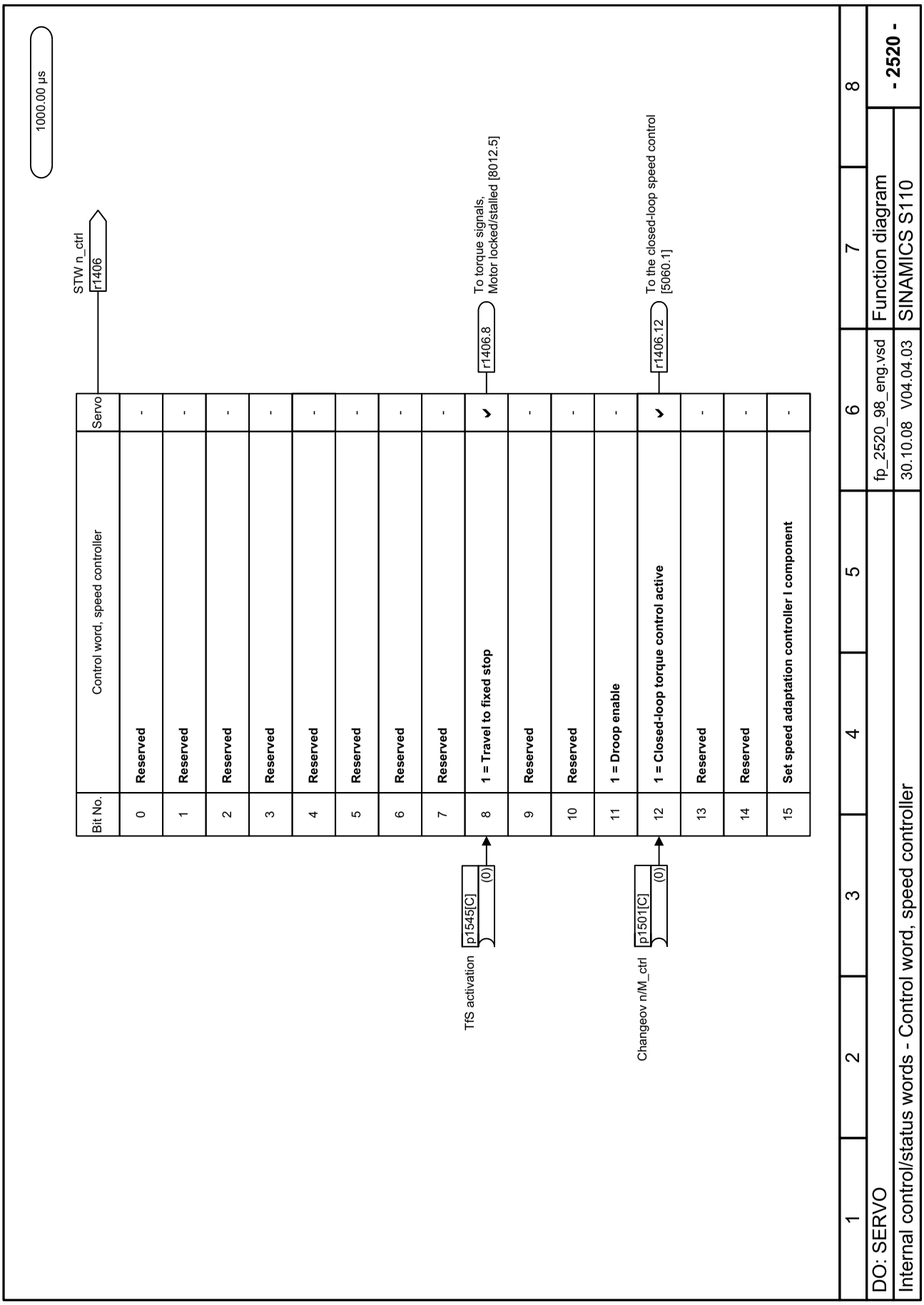

Fig. 3-59 2520 – Control word, speed controller

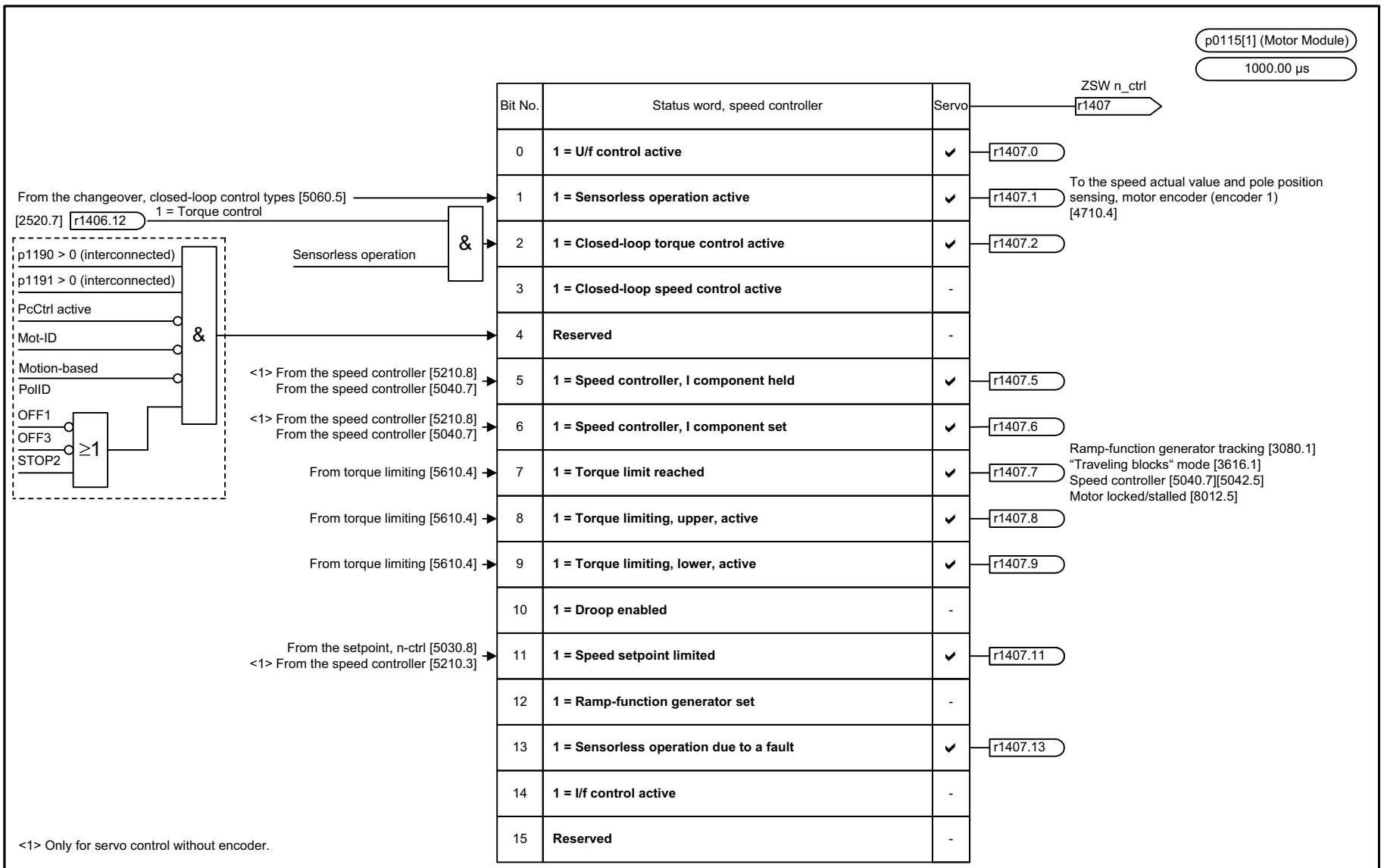

1	2	3	4	5	6	7	8
DO: SERVO					fp_2522_98_eng.vsd	Function diagram	- 2522 -
Internal control/status words - Status word, speed controller					26.07.10 V04.04.03	SINAMICS S110	

Fig. 3-60 2522 – Status word, speed controller

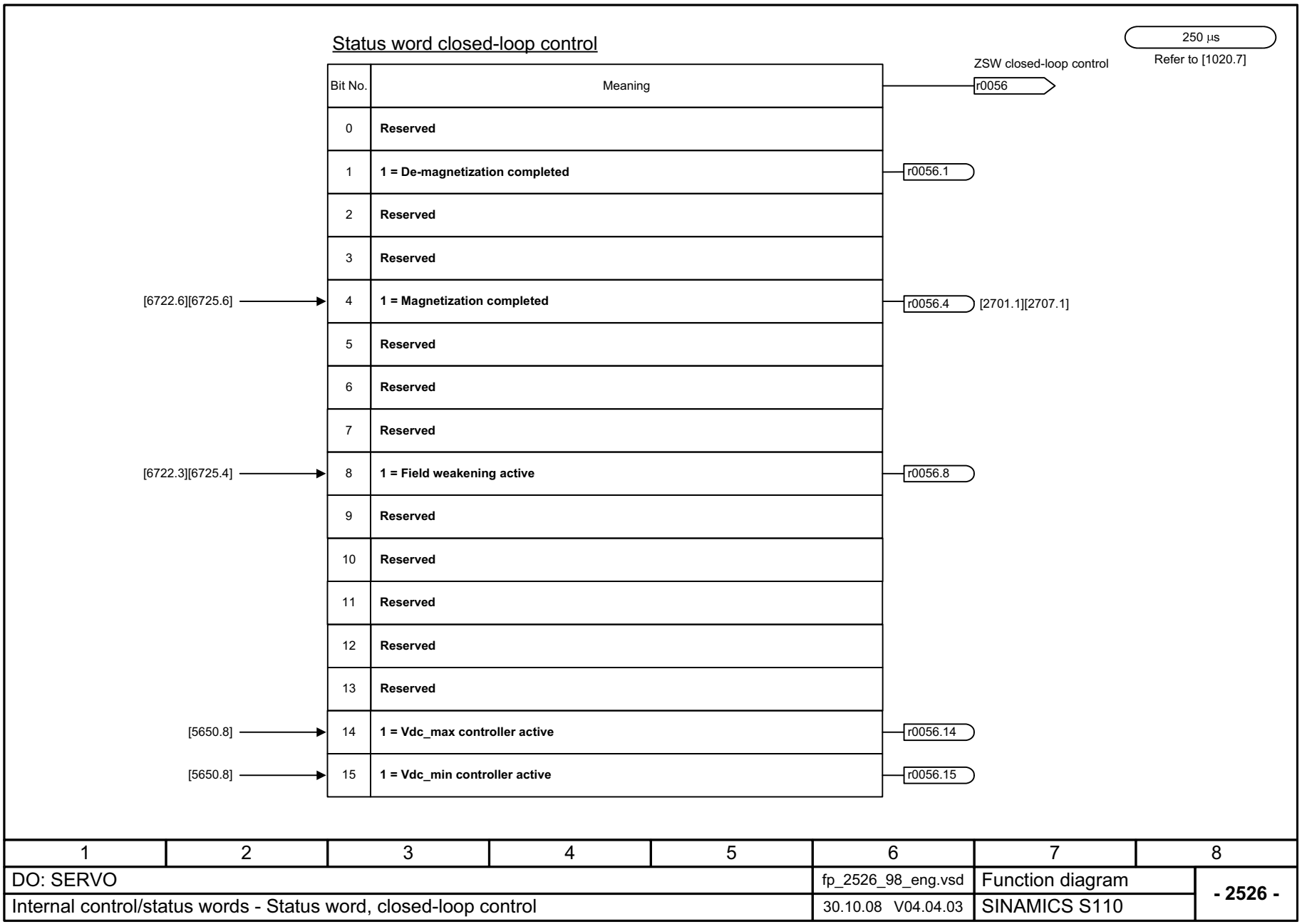

1	2	3	4	5	6	7	8
DO: SERVO					fp_2526_98_eng.vsd	Function diagram	- 2526 -
Internal control/status words - Status word, closed-loop control					30.10.08 V04.04.03	SINAMICS S110	

Fig. 3-61 2526 – Status word, closed-loop control

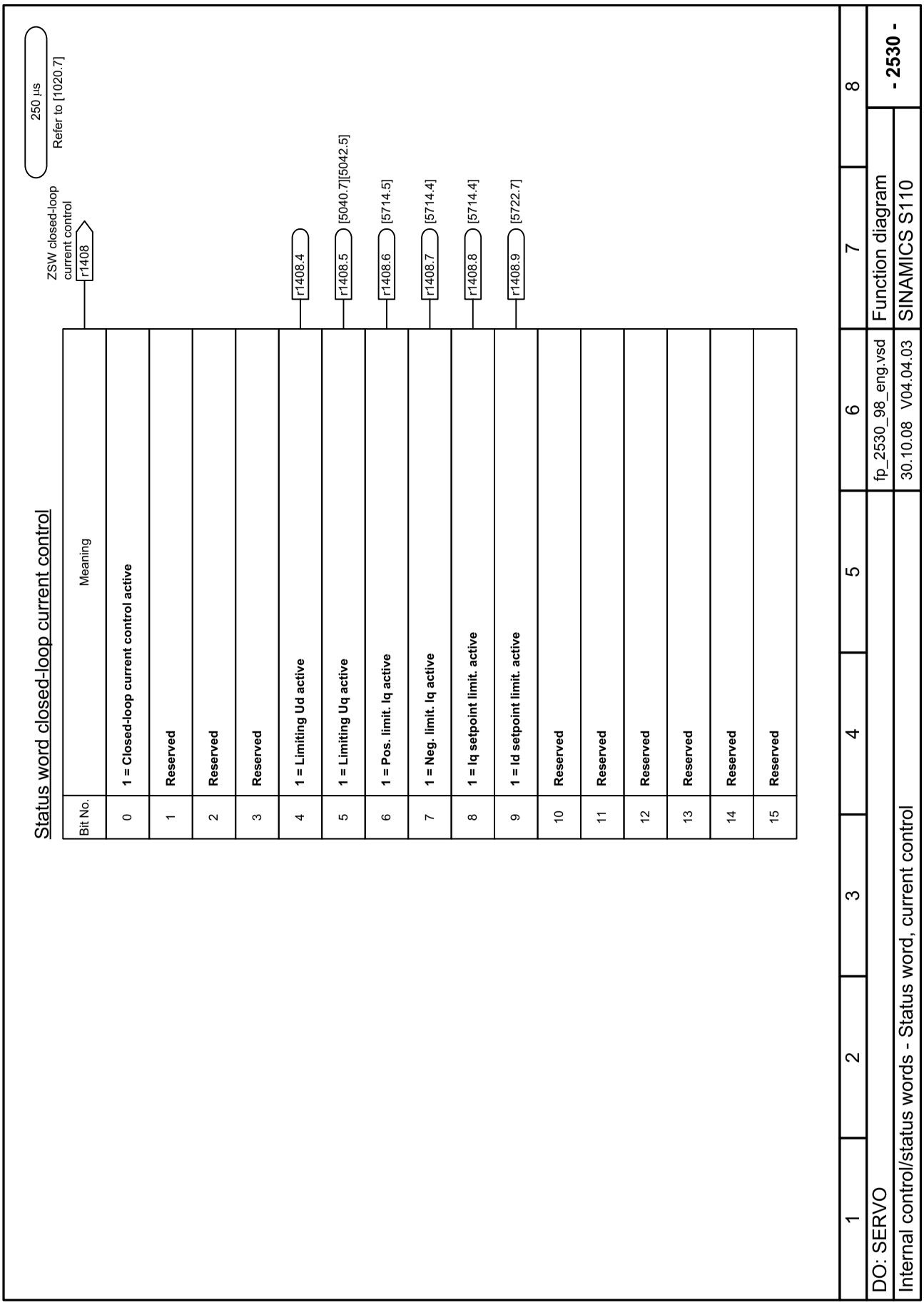

Fig. 3-62 2530 – Status word, closed-loop current control

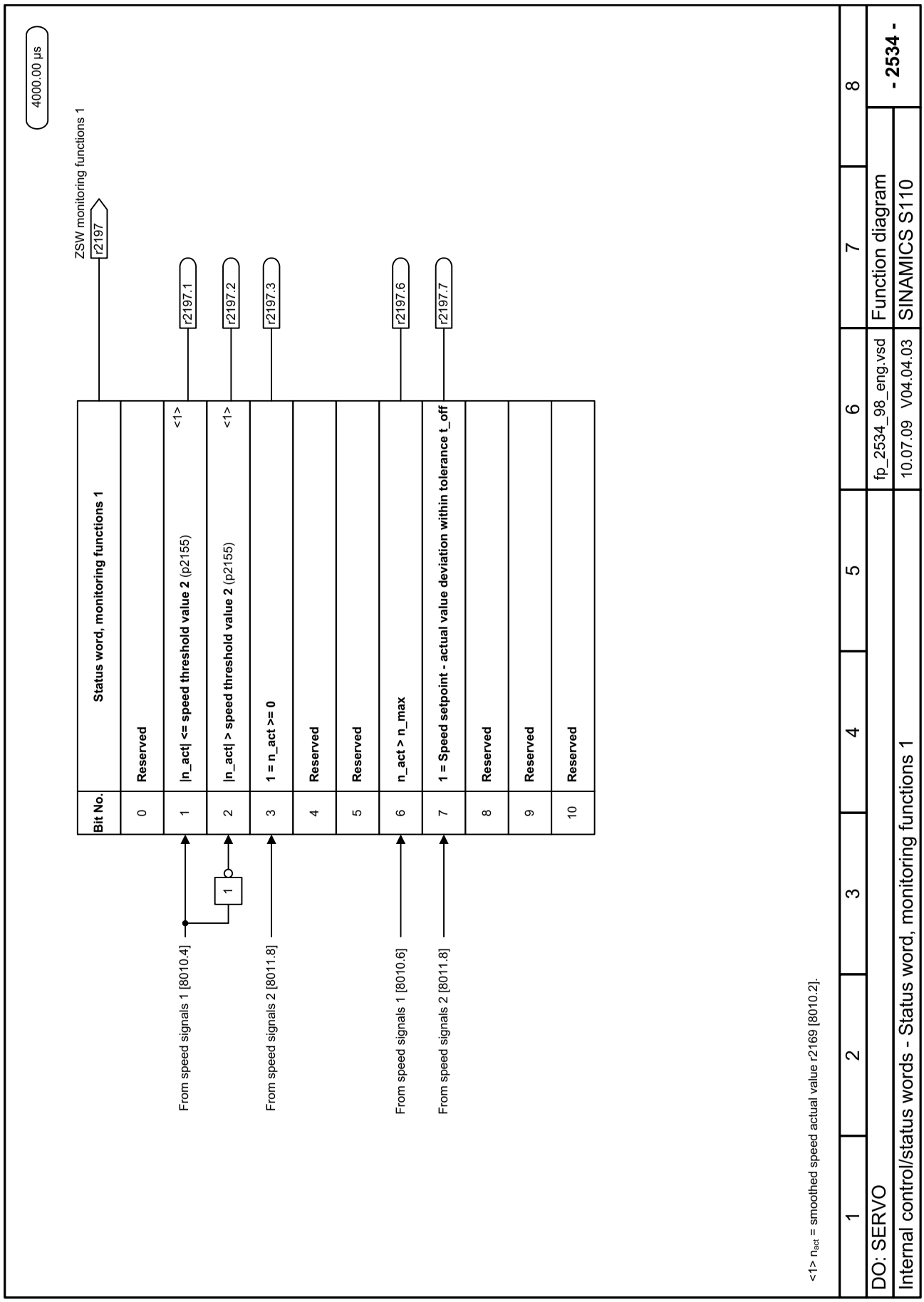

Fig. 3-63 2534 – Status word, monitoring functions 1

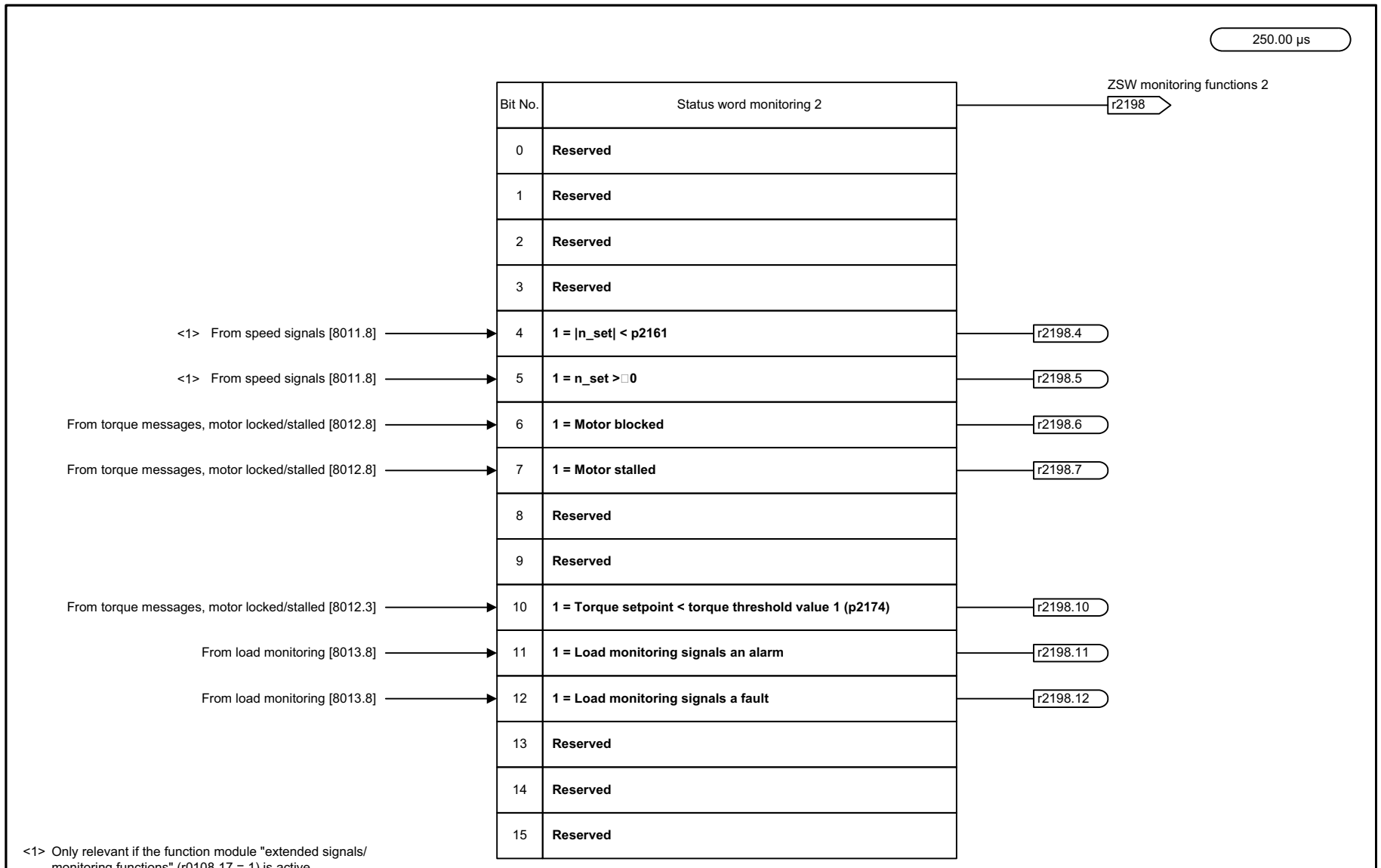

1	2	3	4	5	6	7	8
DO: SERVO					fp_2536_98_eng.vsd	Function diagram	- 2536 -
Internal control/status words - Status word, monitoring functions 2					03.03.09 V04.04.03	SINAMICS S110	

Fig. 3-64 2536 – Status word, monitoring functions 2

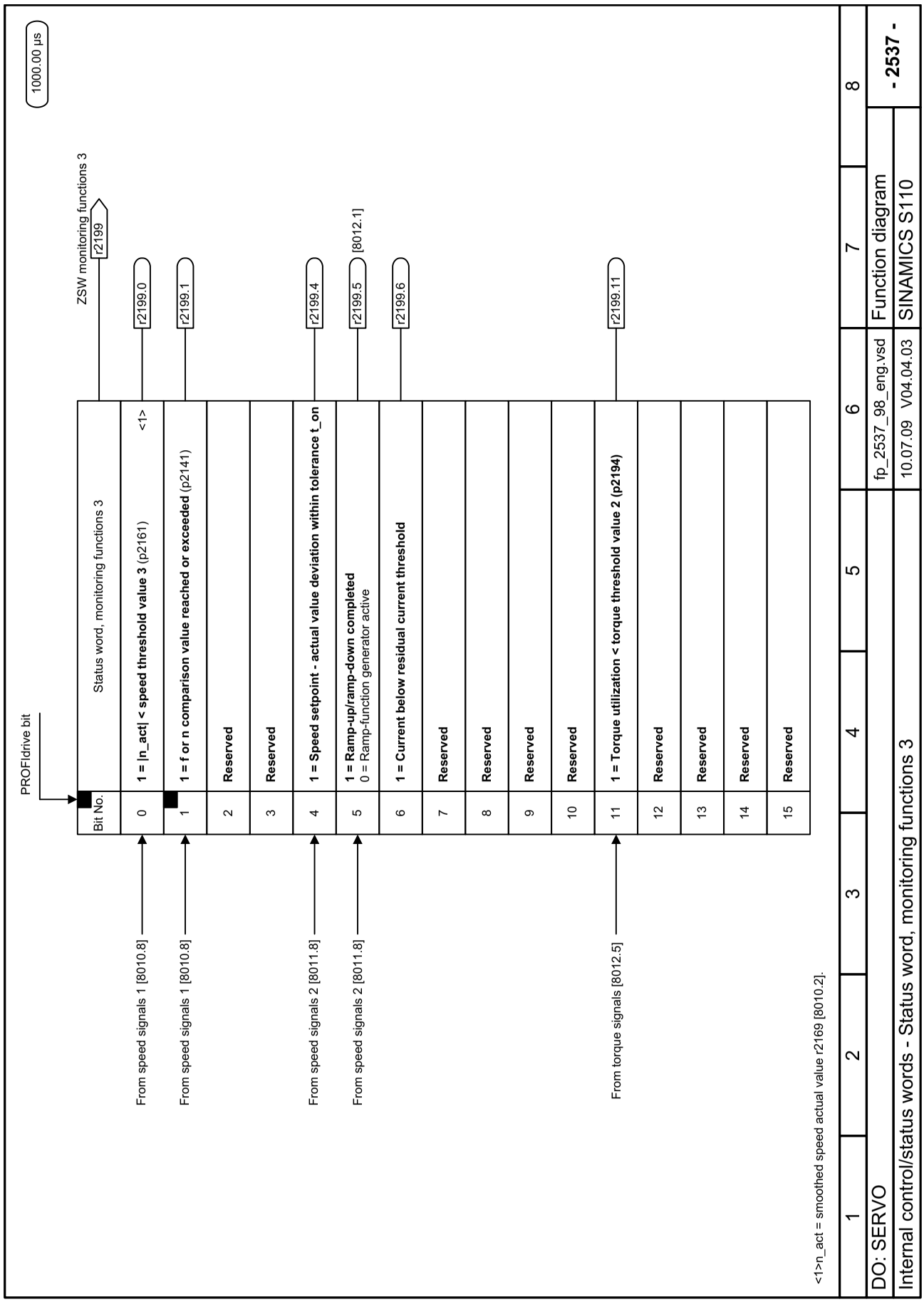

Fig. 3-65 2537 – Status word, monitoring functions 3

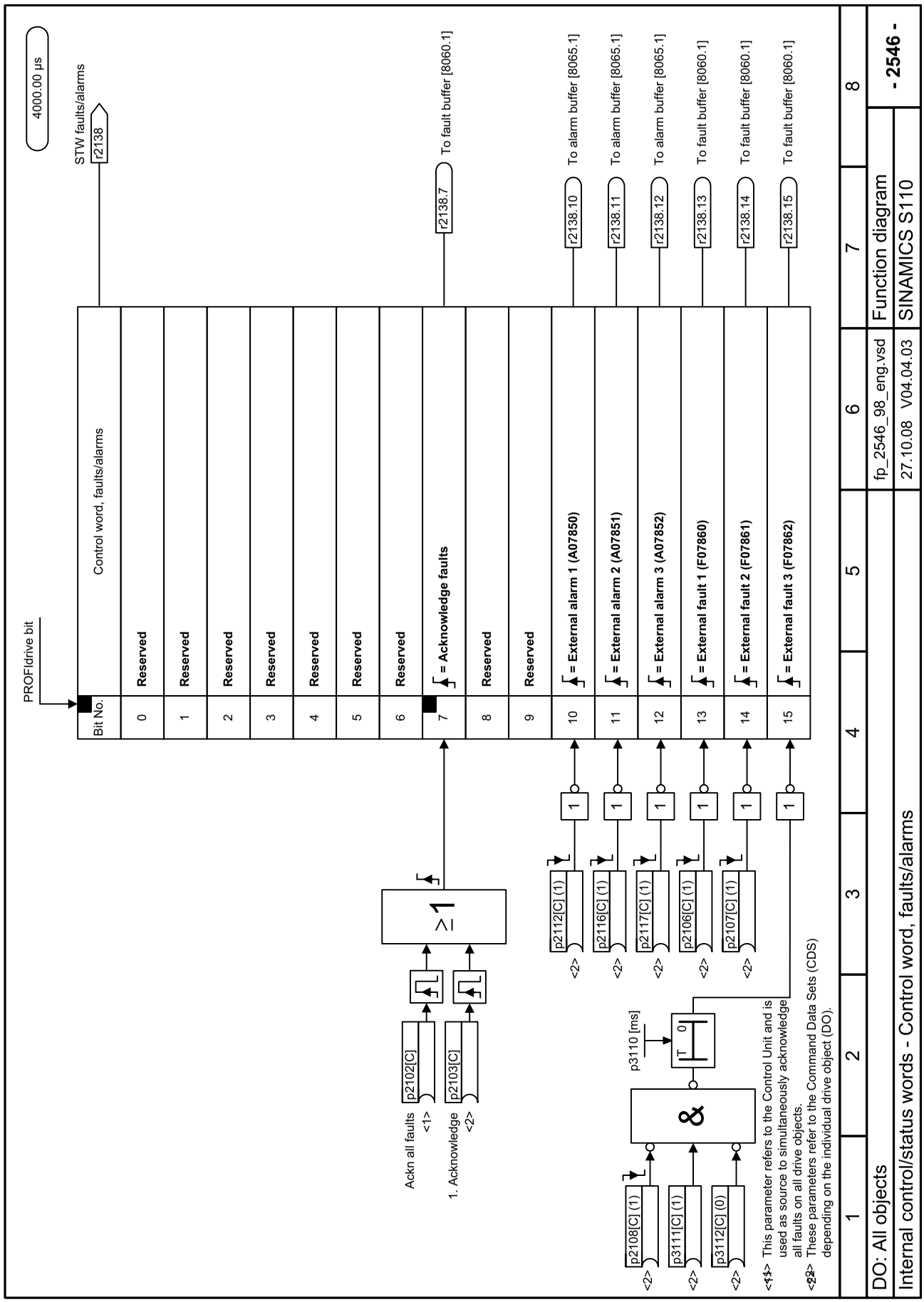

Fig. 3-66 2546 – Control word, faults/alarms

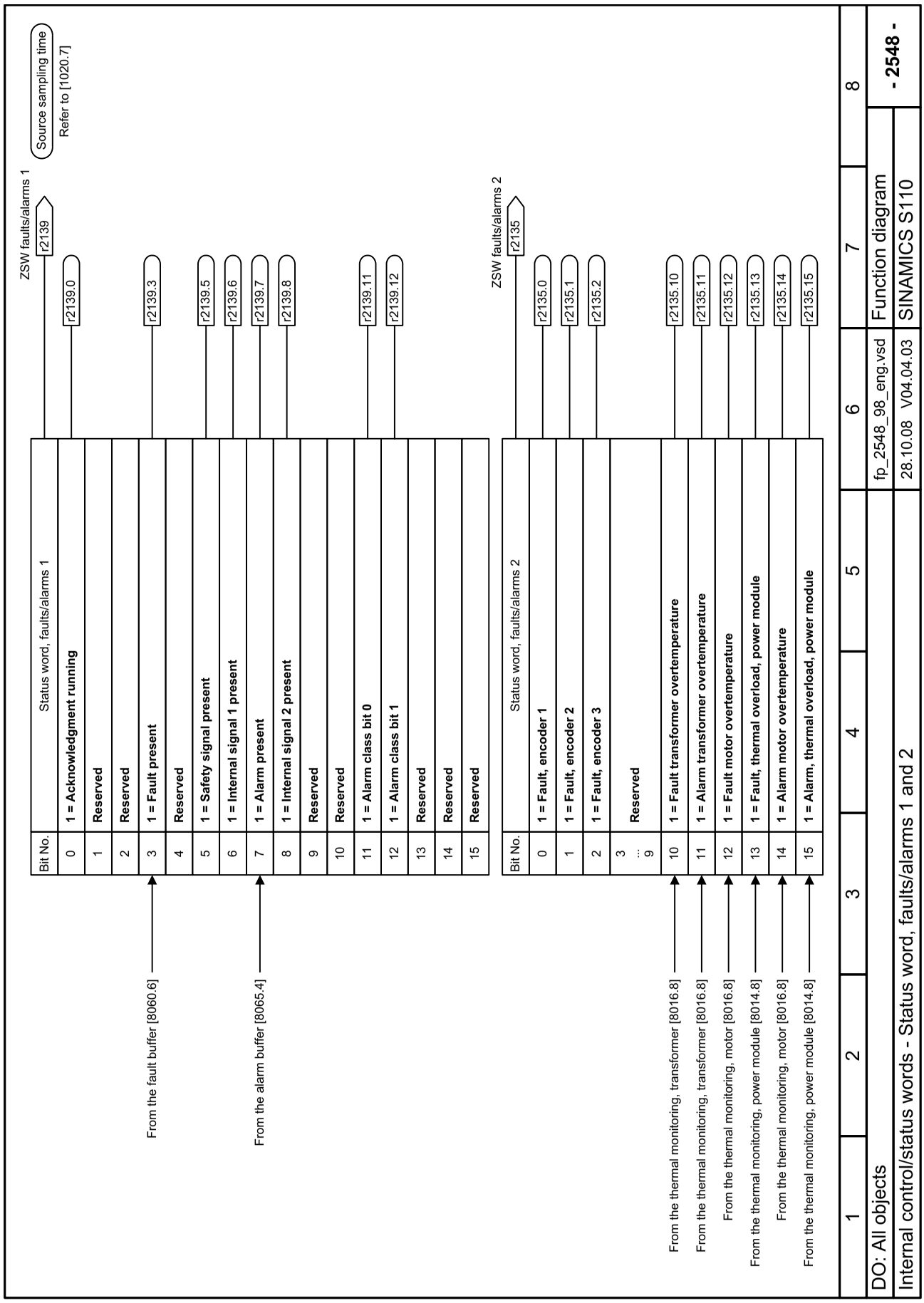

Fig. 3-67 2548 – Status word, faults/alarms 1 and 2

3.7 Sequence control

Function block diagrams

2610 – Sequencer	791
2634 – Missing enable signals, line contactor control, logic operation	792

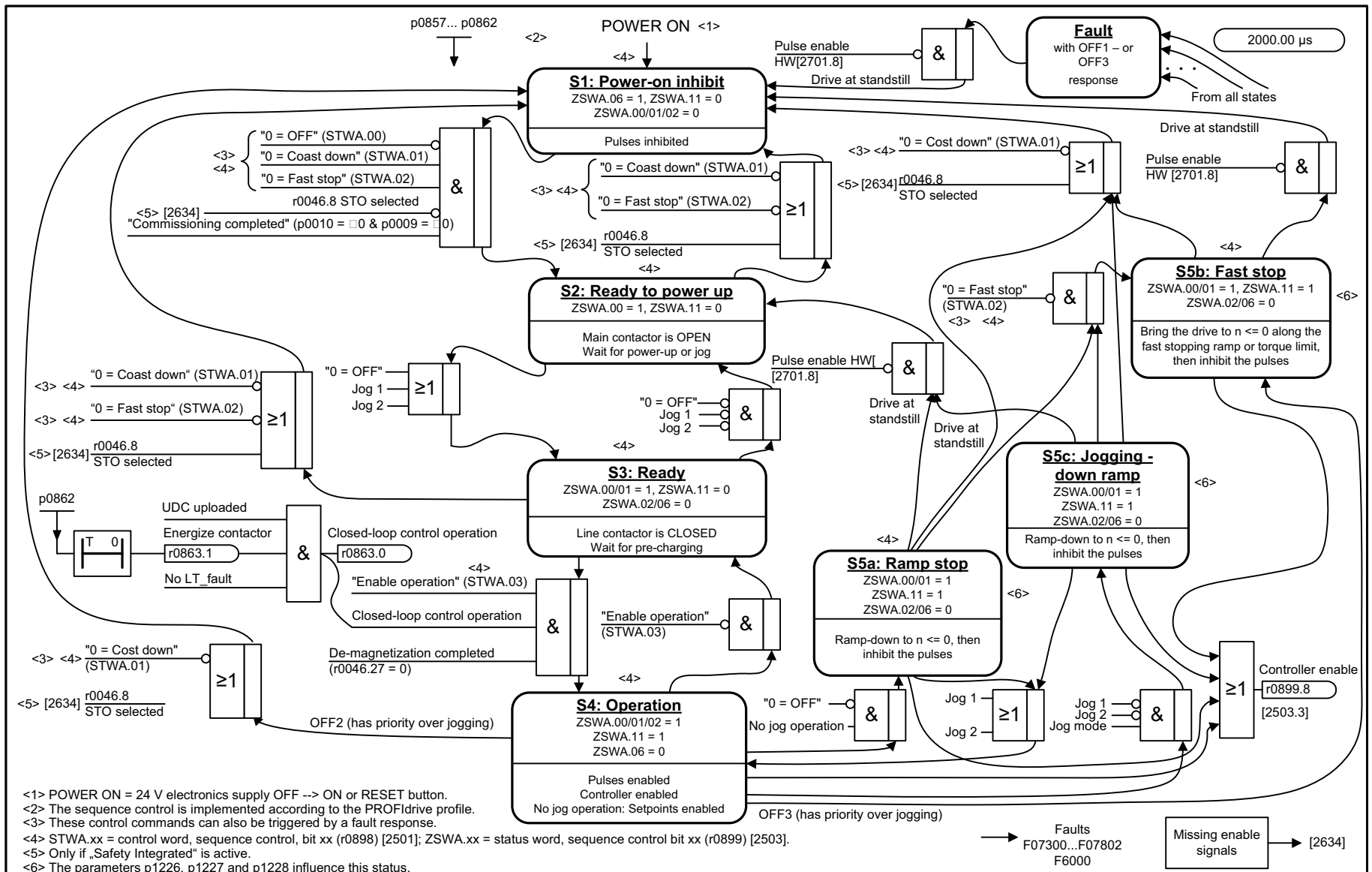

1	2	3	4	5	6	7	8
DO: SERVO					fp_2610_98_eng.vsd	Function diagram	- 2610 -
Sequence control - Sequencer					09.01.09 V04.04.03	SINAMICS S110	

Fig. 3-68 2610 – Sequencer

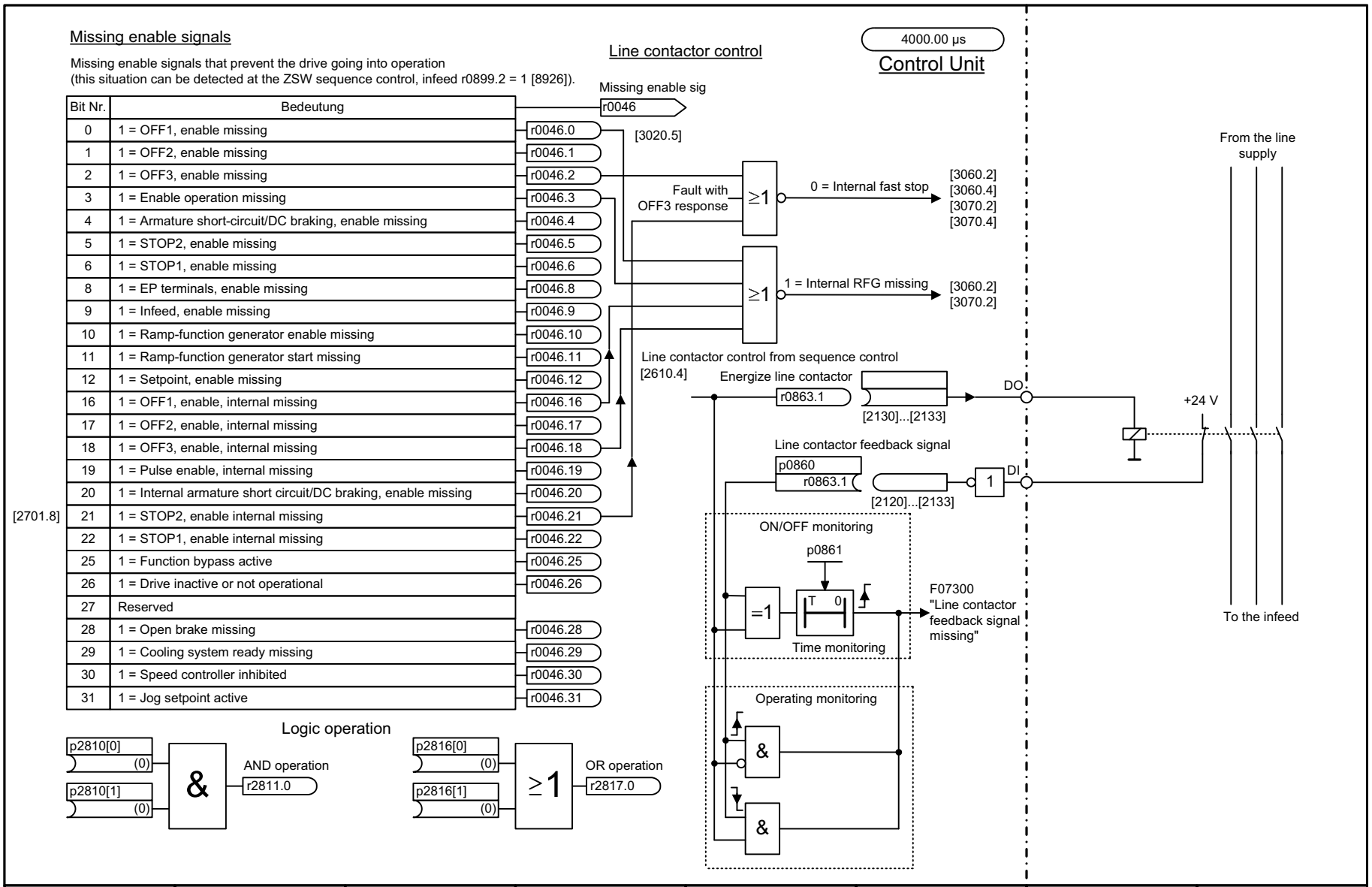

1	2	3	4	5	6	7	8
DO: SERVO					fp_2634_98_eng.vsd	Function diagram	- 2634 -
Sequence control - Missing enable signals, line contactor control, logic operation					11.04.11 V04.04.03	SINAMICS S110	

Fig. 3-69 2634 – Missing enable signals, line contactor control, logic operation

3.8 Brake control

Function block diagrams

2701 – Basic brake control (r0108.14 = 0)	794
2704 – Extended brake control, zero-speed detection (r0108.14 = 1)	795
2707 – Extended brake control, open/close brake (r0108.14 = 1)	796
2711 – Extended brake control, signal outputs (r0108.14 = 1)	797

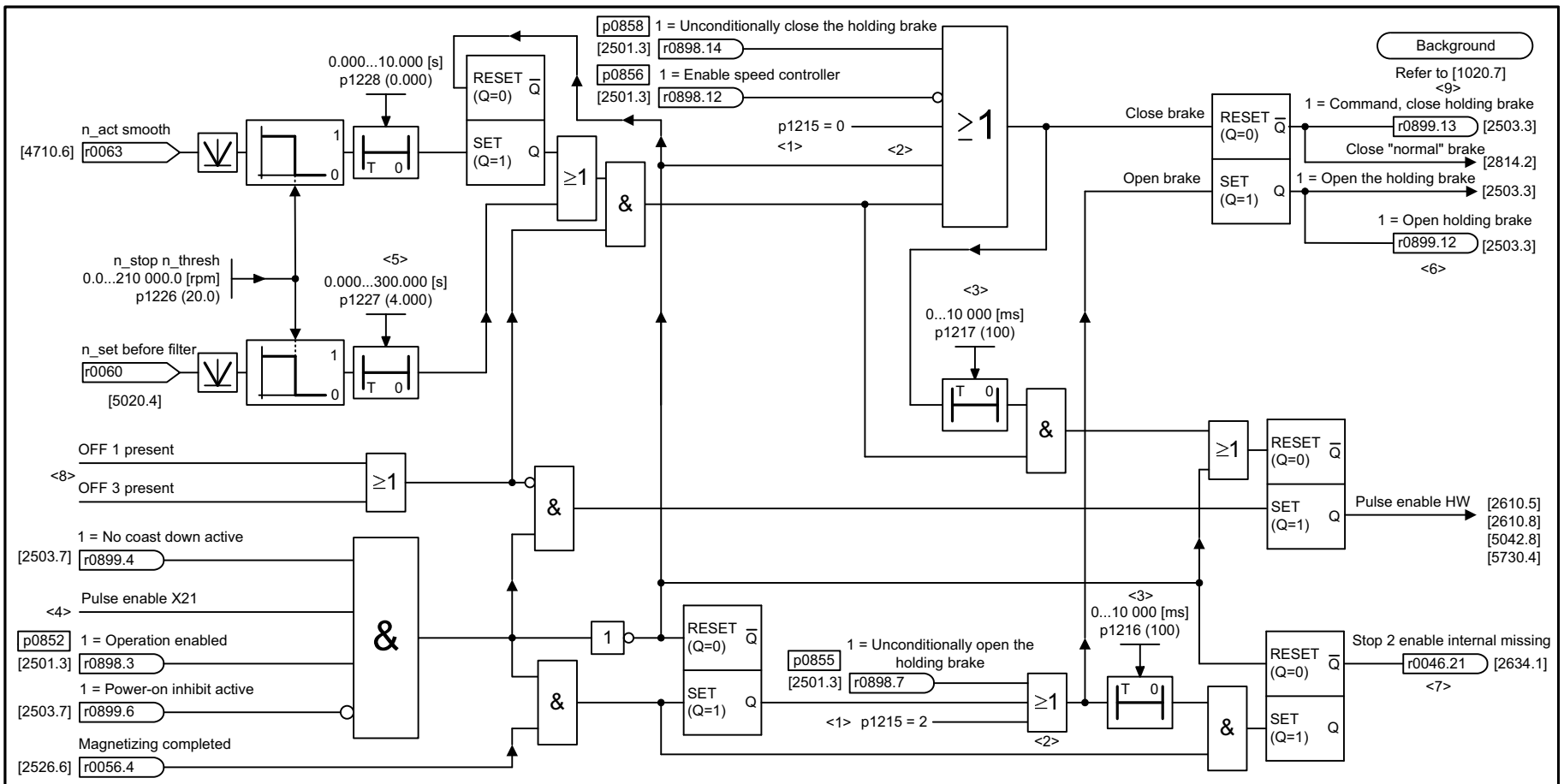

<1> Motor holding brake configuration (p1215)
0 = No motor holding brake being used.
1 = Motor holding brake acc. to sequence control.
2 = Motor holding brake always released.
3 = Motor holding brake like sequence control, connection via BICO.
<2> Priority assignment (high -> low): p1215, p0858, p0855, p0856, sequence control.
<3> If p1215 = 0, 2 -> t = 0 ms.
<4> Only if Safety Integrated is active.

<5> For p1227 = 300 s, the monitoring function is deactivated.
<6> If an external motor holding brake is used, p1215 should be set to 3 and r0899.12 should be interconnected as control signal.
<7> r0046.21 = 0, as long as r0046.0 = 1 (OFF1 enable missing or power-on inhibit).
r0046.21 = 1, if p0858 = 1 or p0856 = 0.
The signal generation is shown simplified.
<8> The internal signal includes signals that lead to OFF1 or OFF3 (e. g. BICO or fault response).
<9> If the brake is permanently applied or released (p0855, p0858 or p1215), the drive does not wait while the brake is released or applied.

Note: Braking signal diagnostic evaluation (p1278) only applies for SBC (Safe Brake Control) (controls the Safe Brake Relay).

1	2	3	4	5	6	7	8
DO: SERVO					fp_2701_98_eng.vsd	Function diagram	- 2701 -
Braking control - Basic braking control (r0108.14 = 0)					30.09.11 V04.04.03	SINAMICS S110	

Fig. 3-70 2701 – Basic brake control (r0108.14 = 0)

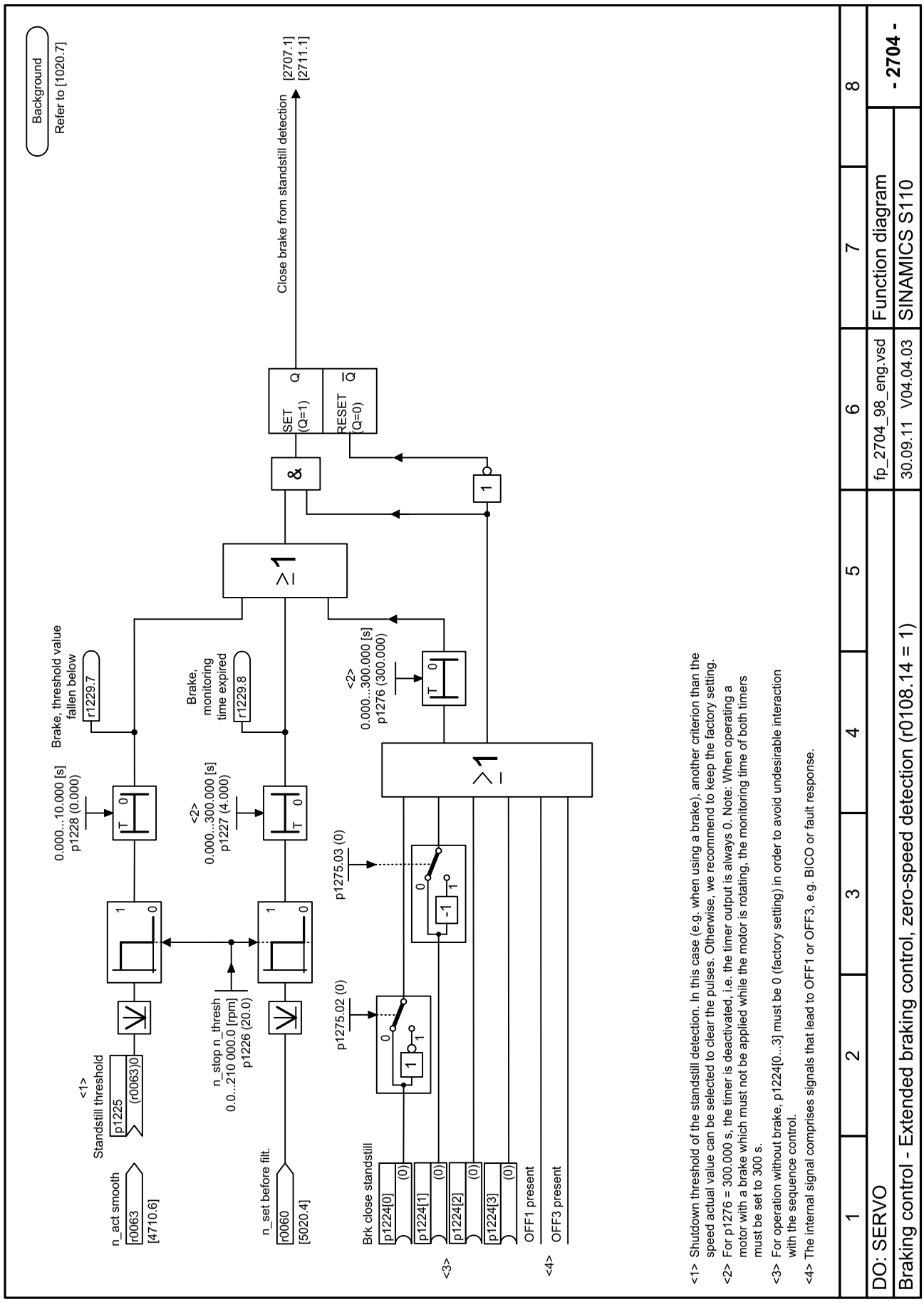

Fig. 3-71 2704 – Extended brake control, zero-speed detection (r0108.14 = 1)

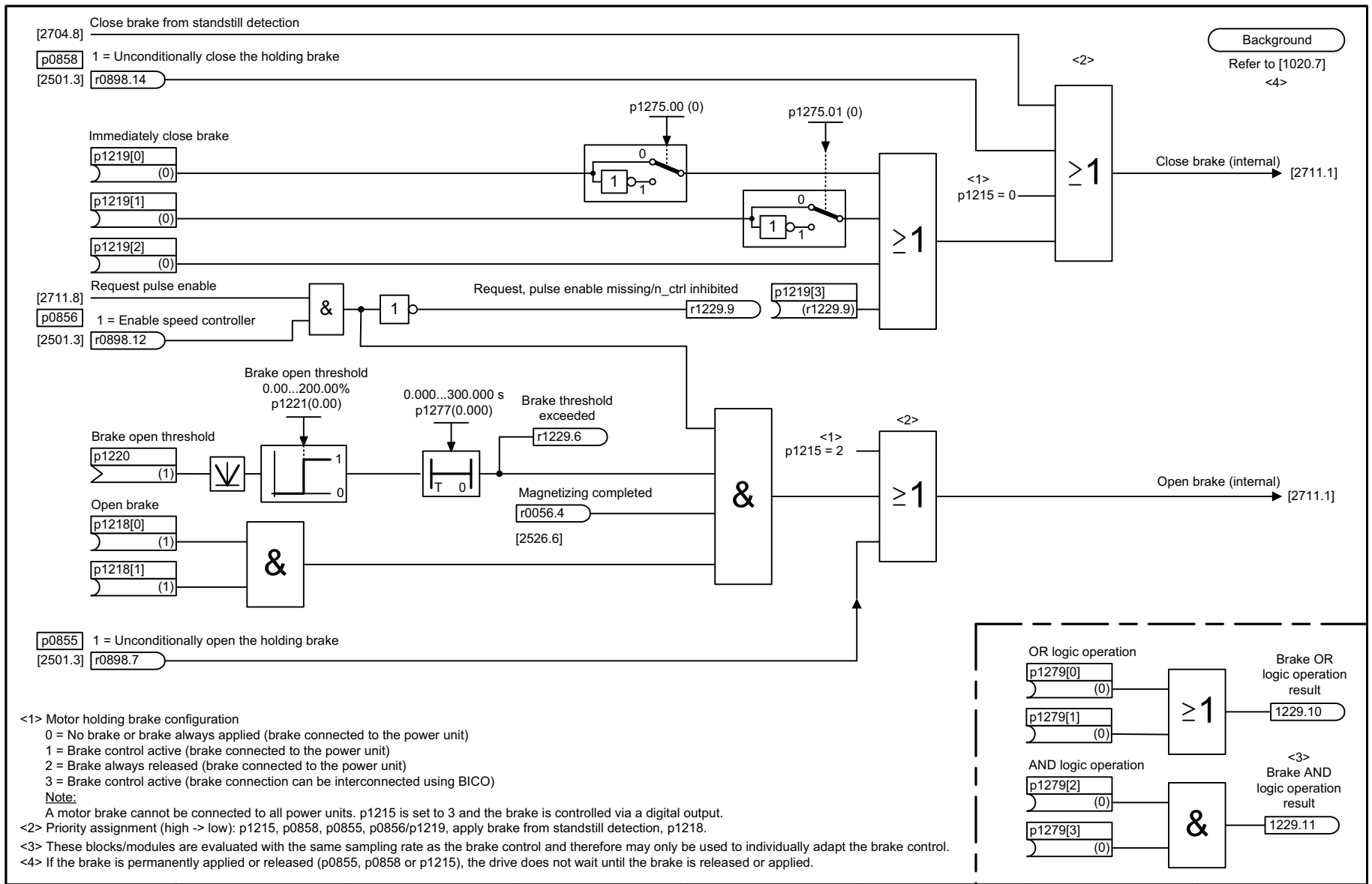

<1> Motor holding brake configuration
0 = No brake or brake always applied (brake connected to the power unit)
1 = Brake control active (brake connected to the power unit)
2 = Brake always released (brake connected to the power unit)
3 = Brake control active (brake connection can be interconnected using BICO)
Note:
A motor brake cannot be connected to all power units. p1215 is set to 3 and the brake is controlled via a digital output.
<2> Priority assignment (high -> low): p1215, p0858, p0855, p0856/p1219, apply brake from standstill detection, p1218.
<3> These blocks/modules are evaluated with the same sampling rate as the brake control and therefore may only be used to individually adapt the brake control.
<4> If the brake is permanently applied or released (p0855, p0858 or p1215), the drive does not wait until the brake is released or applied.

1	2	3	4	5	6	7	8
DO: SERVO					fp_2707_98_eng.vsd	Function diagram	- 2707 -
Braking control - Extended braking control, open/close brake (r0108.14 = 1)					09.09.08 V04.04.03	SINAMICS S110	

Fig. 3-72 2707 – Extended brake control, open/close brake (r0108.14 = 1)

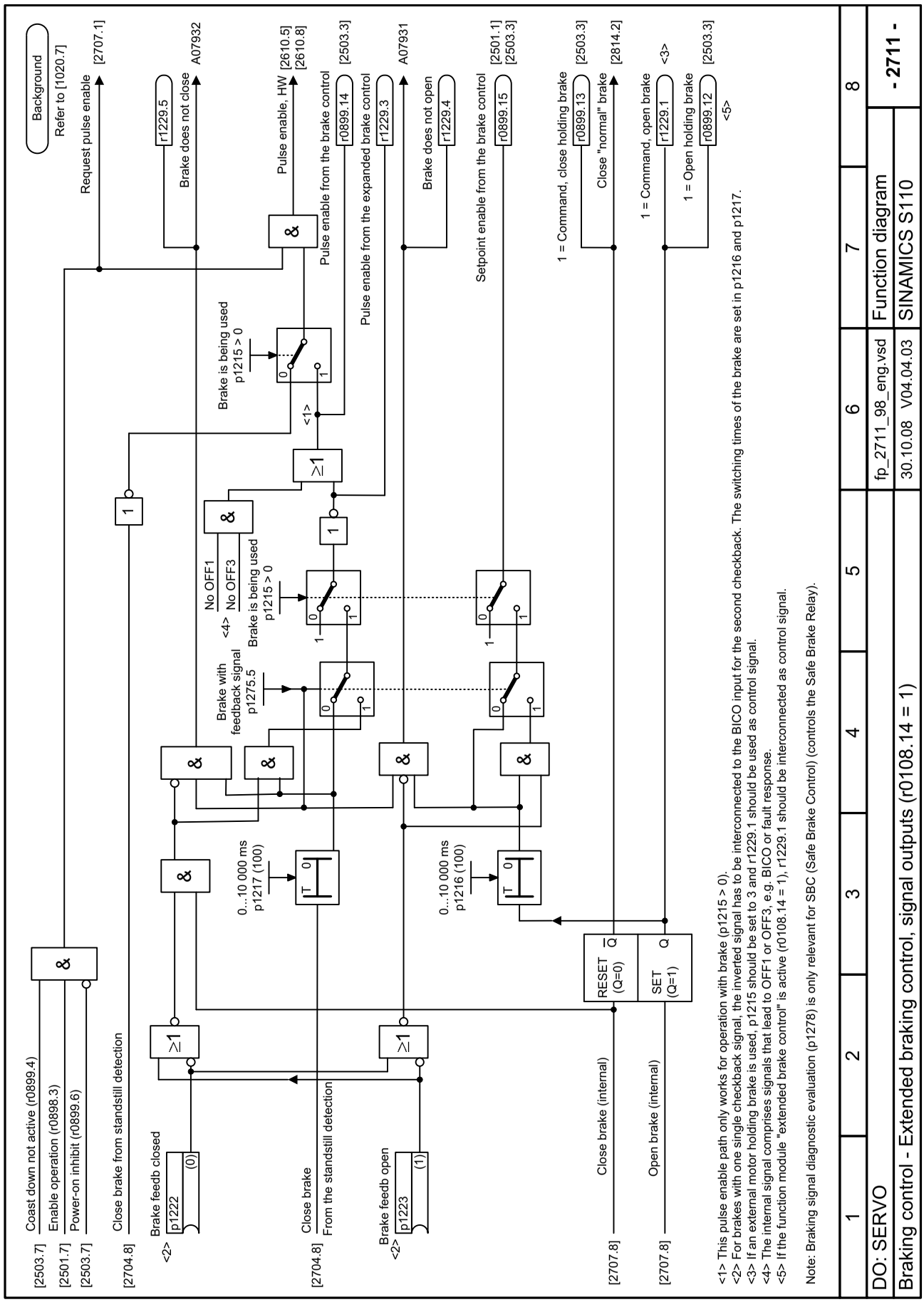

Fig. 3-73 2711 – Extended brake control, signal outputs (r0108.14 = 1)

3.9 Safety Integrated

Function block diagrams

2800 – Basic Functions, parameter manager	799
2802 – Basic Functions, monitoring functions and faults/alarms	800
2804 – Basic Functions, status words	801
2810 – Basic Functions, STO (Safe Torque Off), SS1 (Safe Stop 1)	802
2811 – Basic Functions, STO (Safe Torque Off), safe pulse cancellation	803
2814 – Basic Functions, SBC (Safe Brake Control)	804
2820 – Extended Functions, SLS (Safely-Limited Speed)	805
2825 – Extended Functions, SS1, SS2, SOS, internal STOP B, C, D, F	806
2840 – Extended Functions, control word and status word	807
2846 – Extended Functions, parameter manager	808
2850 – Extended Functions, fail-safe digital inputs (F-DI 0 ... F-DI 2)	809
2853 – Extended Functions, fail-safe digital output (F-DO 0)	810
2855 – Extended Functions, control interface	811
2856 – Extended Functions, Safe State selection	812
2857 – Extended Functions, assignment (F-DO 0)	813
2858 – Extended Functions, control via PROFIsafe (p9601.2 = p9601.3 = 1)	814
2860 – Extended Functions, SSM (Safe Speed Monitor)	815
2861 – Extended Functions, SDI (Safe Direction)	816

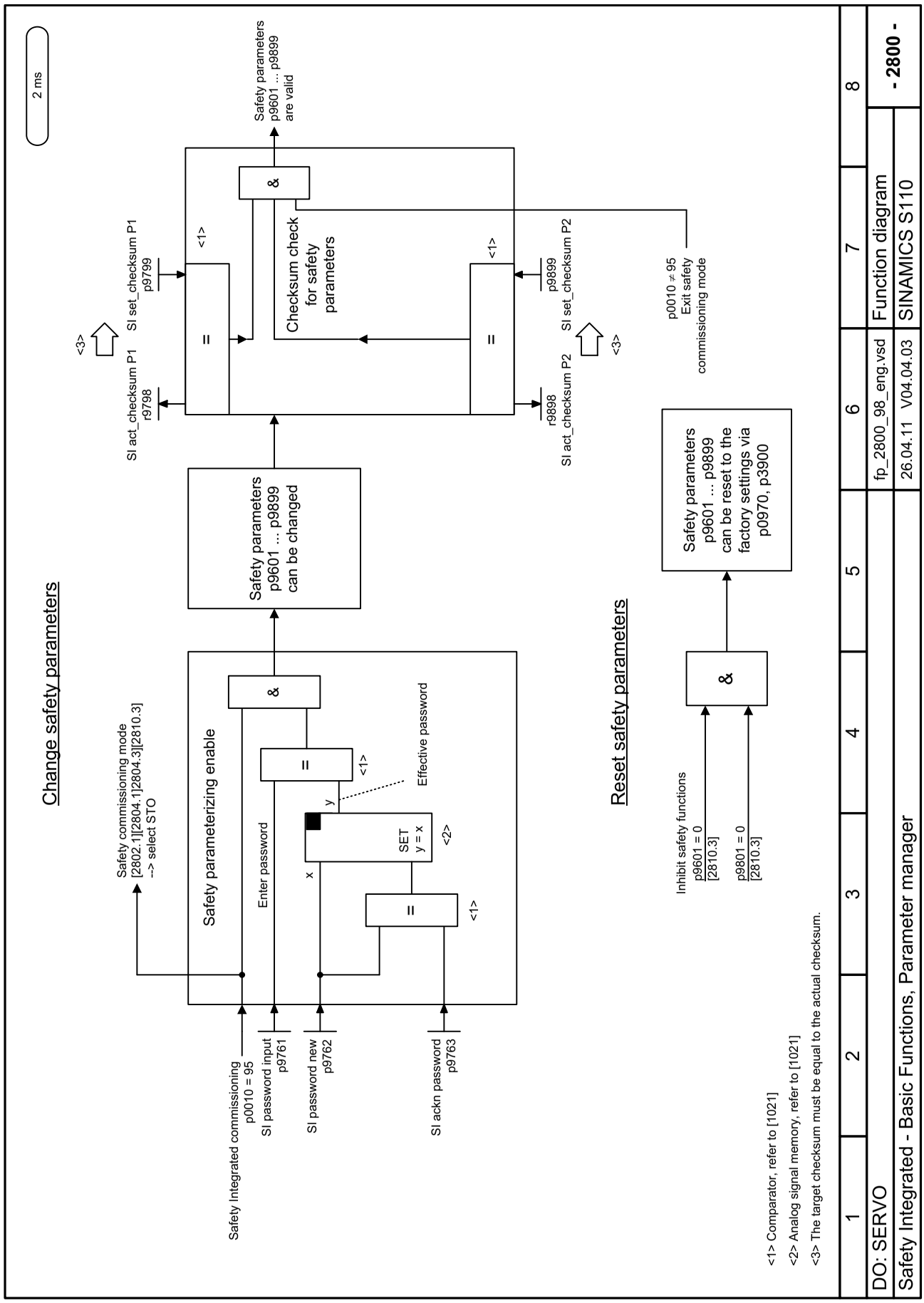

Fig. 3-74 2800 – Basic Functions, parameter manager

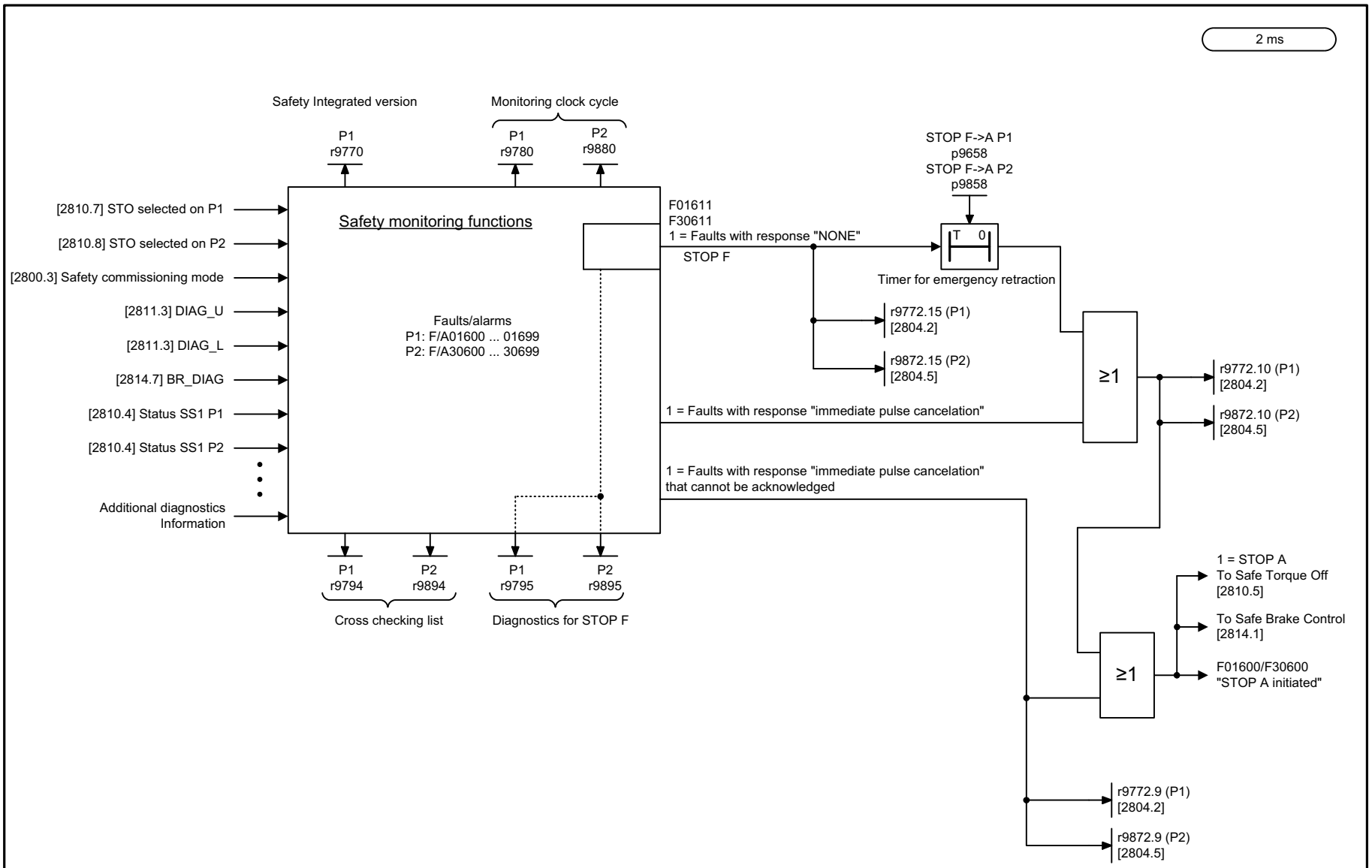

1	2	3	4	5	6	7	8
DO: SERVO					fp_2802_98_eng.vsd	Function diagram	- 2802 -
Safety Integrated - Basic Functions, Monitoring functions and faults/alarms					26.04.11 V04.04.03	SINAMICS S110	

Fig. 3-75 2802 – Basic Functions, monitoring functions and faults/alarms

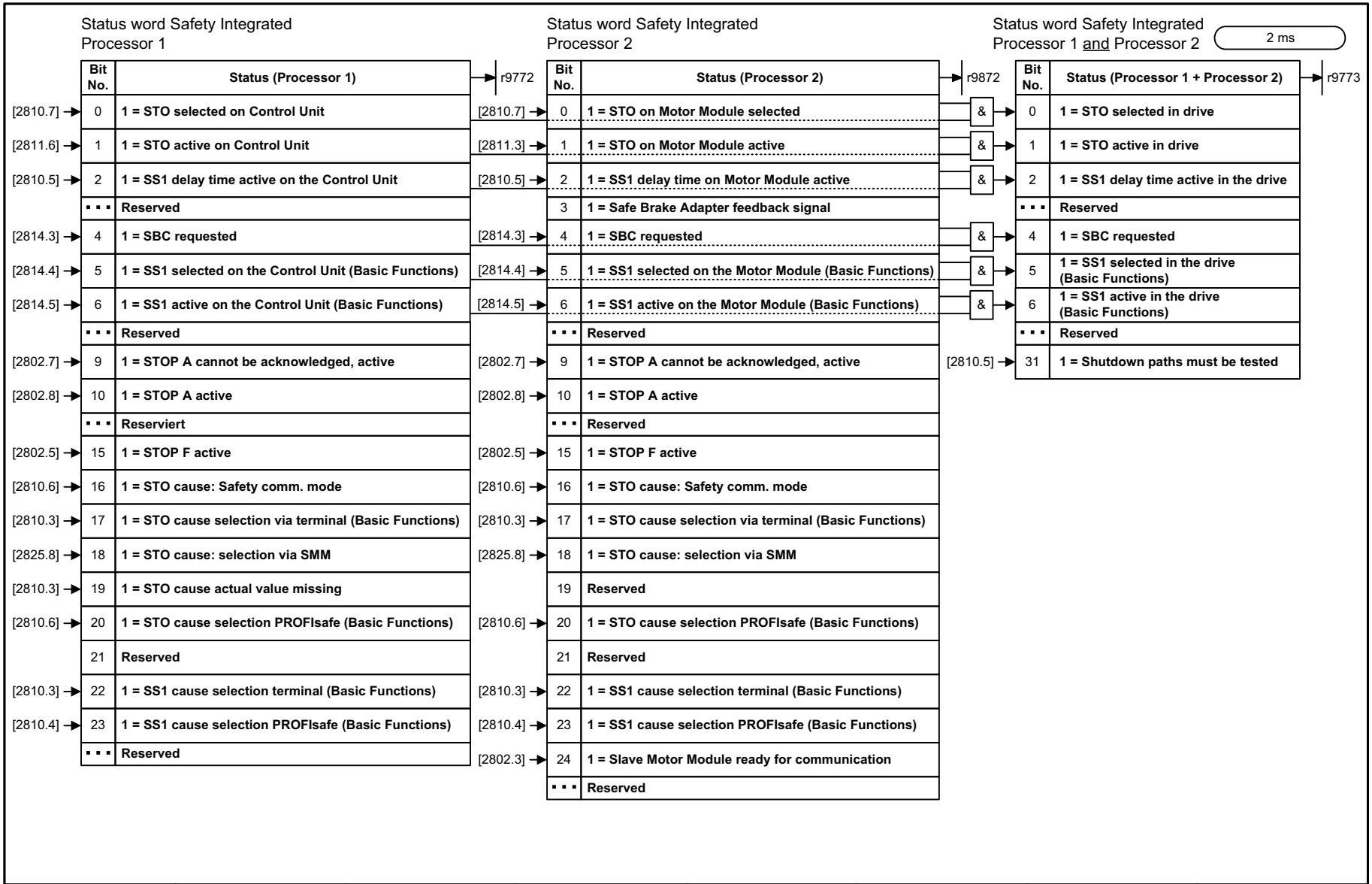

1	2	3	4	5	6	7	8
DO: SERVO					fp_2804_98_eng.vsd	Function diagram	- 2804 -
Safety Integrated - Basic functions, status words					26.04.11 V04.04.03	SINAMICS S110	

Fig. 3-76 2804 – Basic Functions, status words

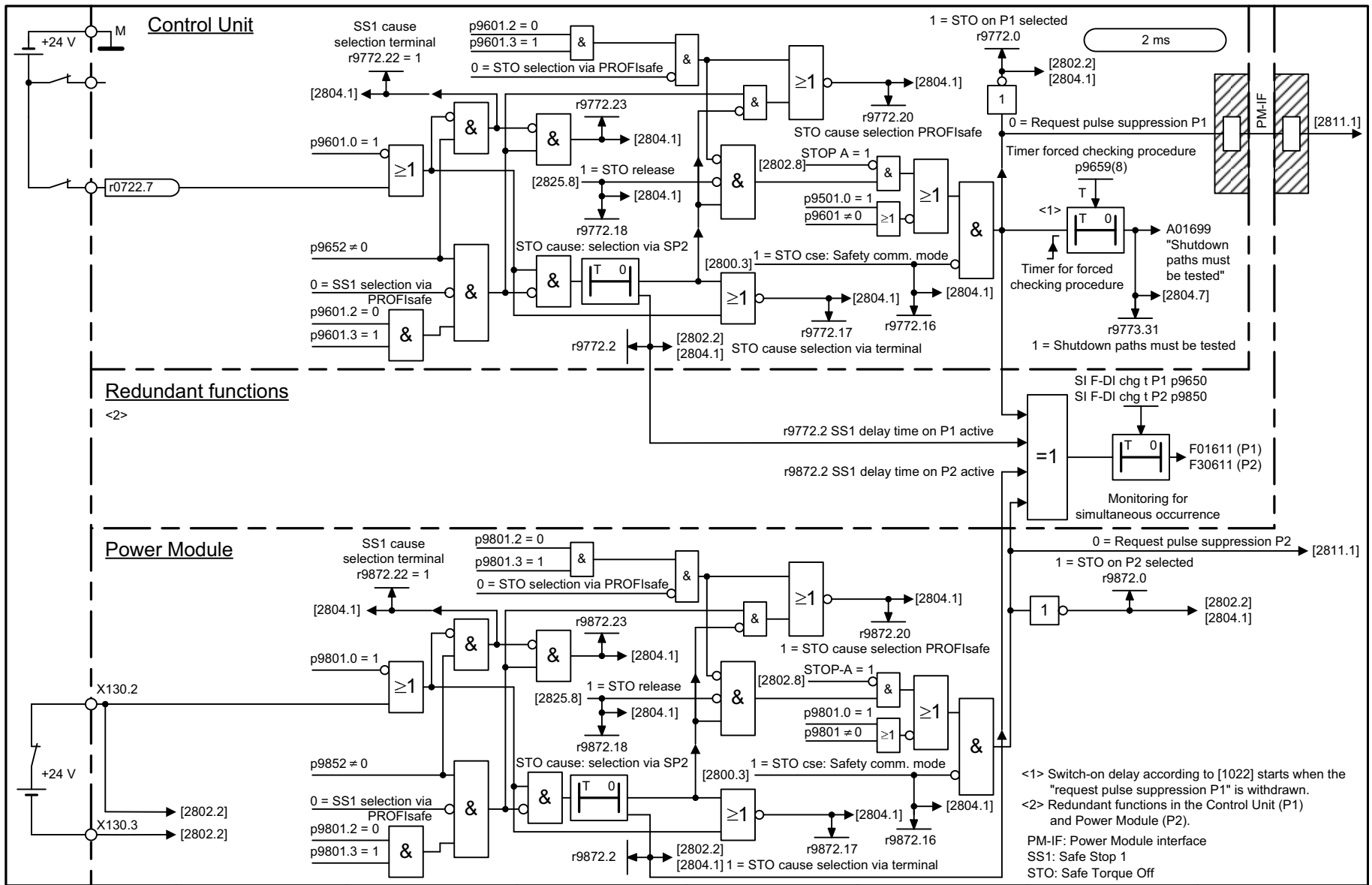

1	2	3	4	5	6	7	8
DO: SERVO					fp_2810_98_eng.vsd	Function diagram	- 2810 -
Safety Integrated - Basic Functions, STO (Safe Torque Off), SS1 (Safe Stop 1)					25.06.14 V04.04.03	SINAMICS S110	

Fig. 3-77 2810 – Basic Functions, STO (Safe Torque Off), SS1 (Safe Stop 1)

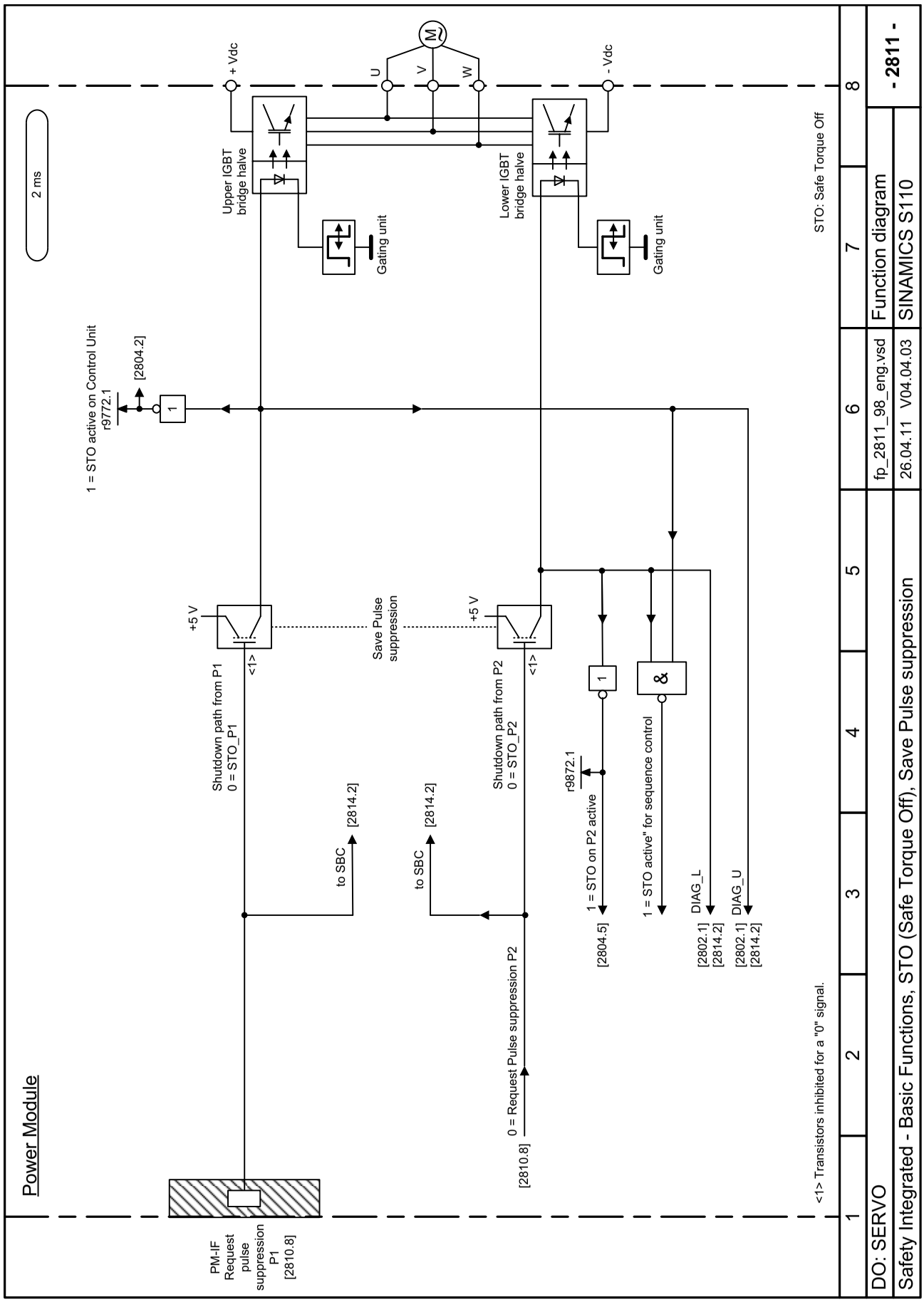

Fig. 3-78 2811 – Basic Functions, STO (Safe Torque Off), safe pulse cancellation

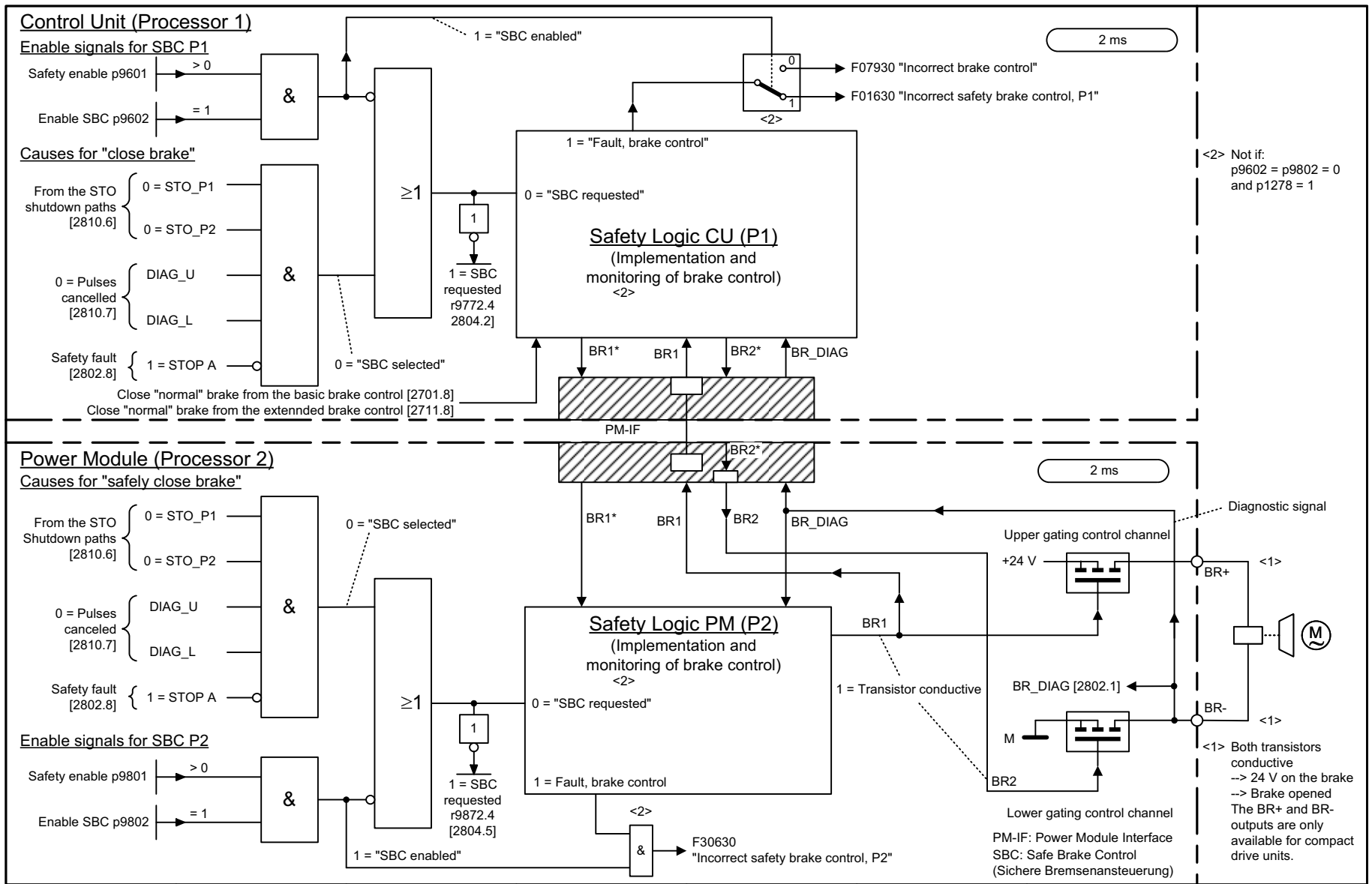

1	2	3	4	5	6	7	8
DO: SERVO					fp_2814_98_eng.vsd	Function diagram	- 2814 -
Safety Integrated - Basic Functions, SBC (Safe Brake Control)					14.09.10 V04.04.03	SINAMICS S110	

Fig. 3-79 2814 – Basic Functions, SBC (Safe Brake Control)

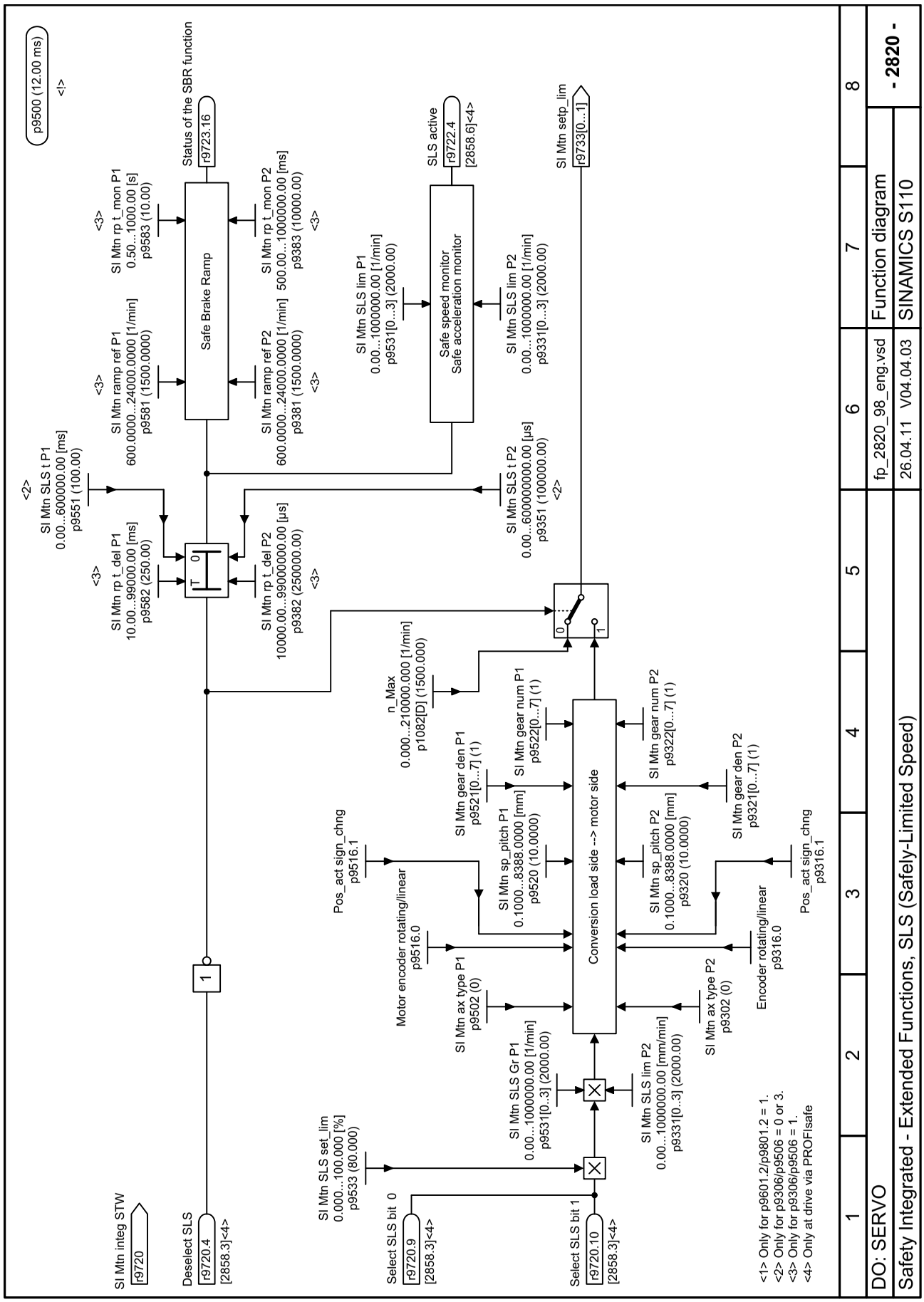

Fig. 3-80 2820 – Extended Functions, SLS (Safely-Limited Speed)

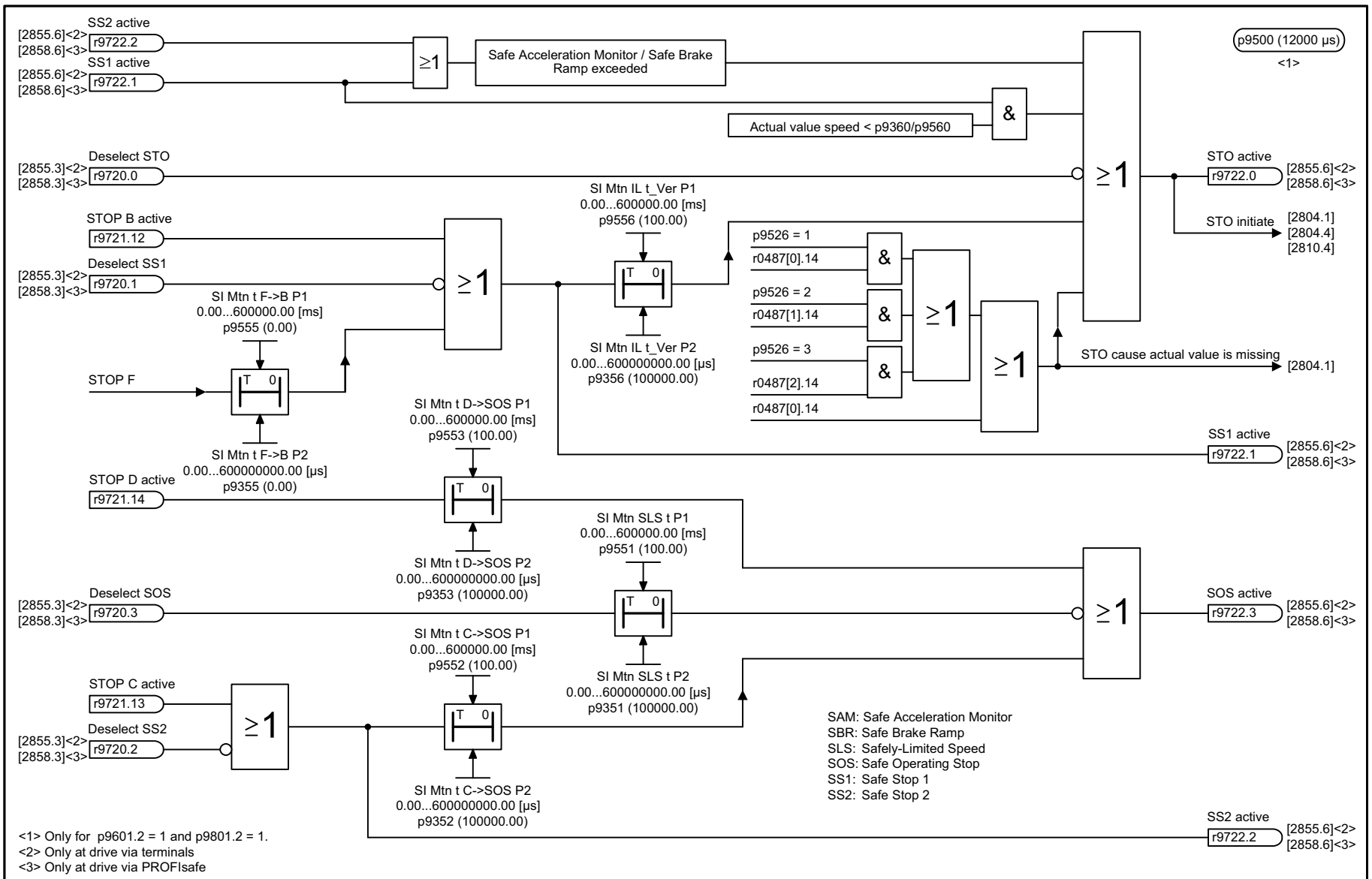

1	2	3	4	5	6	7	8
DO: SERVO					fp_2825_98_eng.vsd	Function diagram	- 2825 -
Safety Integrated - Extended Functions, SS1, SS2, SOS, Internal STOP B, C, D, F					26.04.11 V04.04.03	SINAMICS S110	

Fig. 3-81 2825 – Extended Functions, SS1, SS2, SOS, internal STOP B, C, D, F

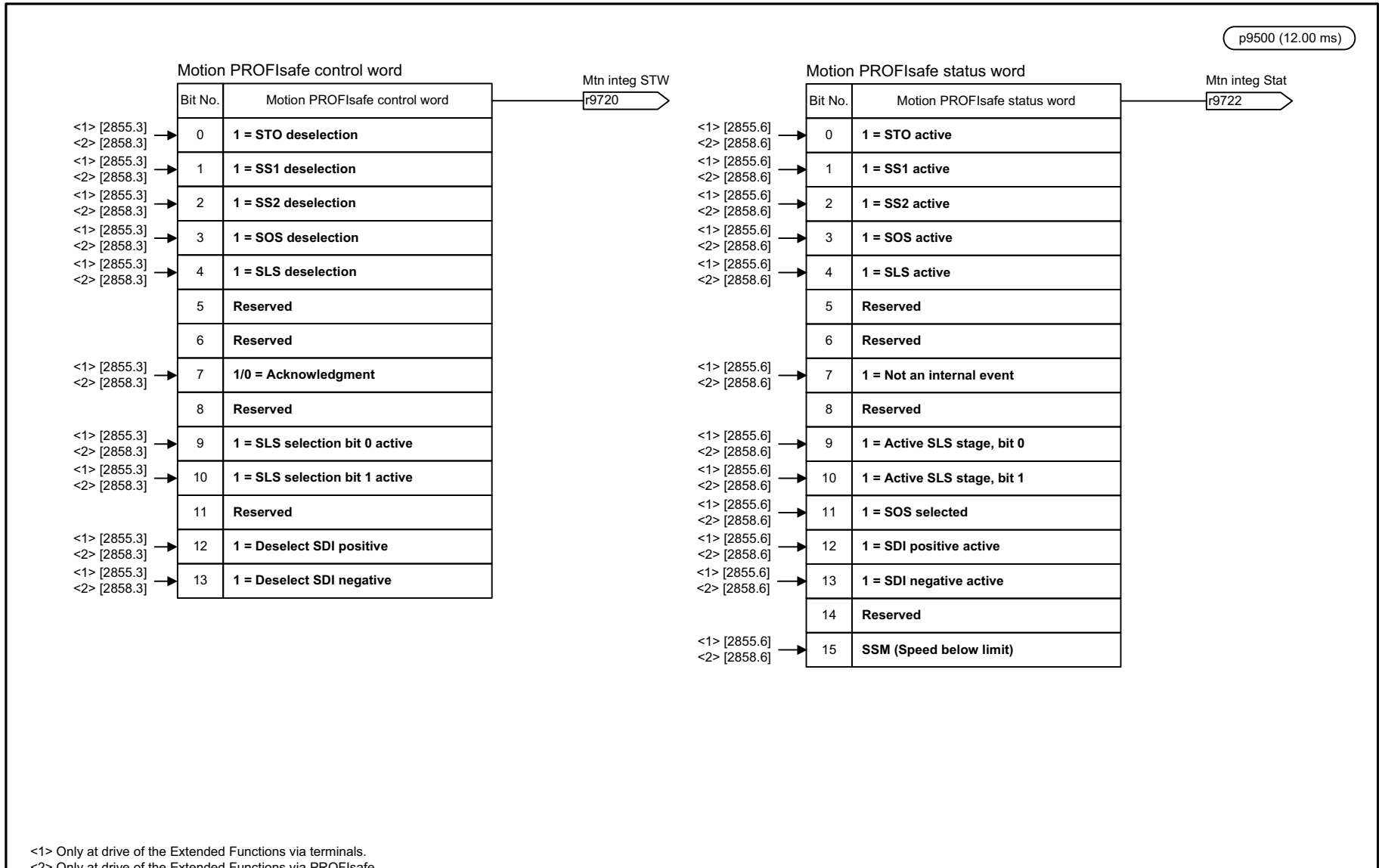

<1> Only at drive of the Extended Functions via terminals.
<2> Only at drive of the Extended Functions via PROFIsafe

1	2	3	4	5	6	7	8
DO: SERVO					fp_2840_98_eng.vsd	Function diagram	- 2840 -
Safety Integrated - Extended Functions, control word and status word					26.04.11 V04.04.03	SINAMICS S110	

Fig. 3-82 2840 – Extended Functions, control word and status word

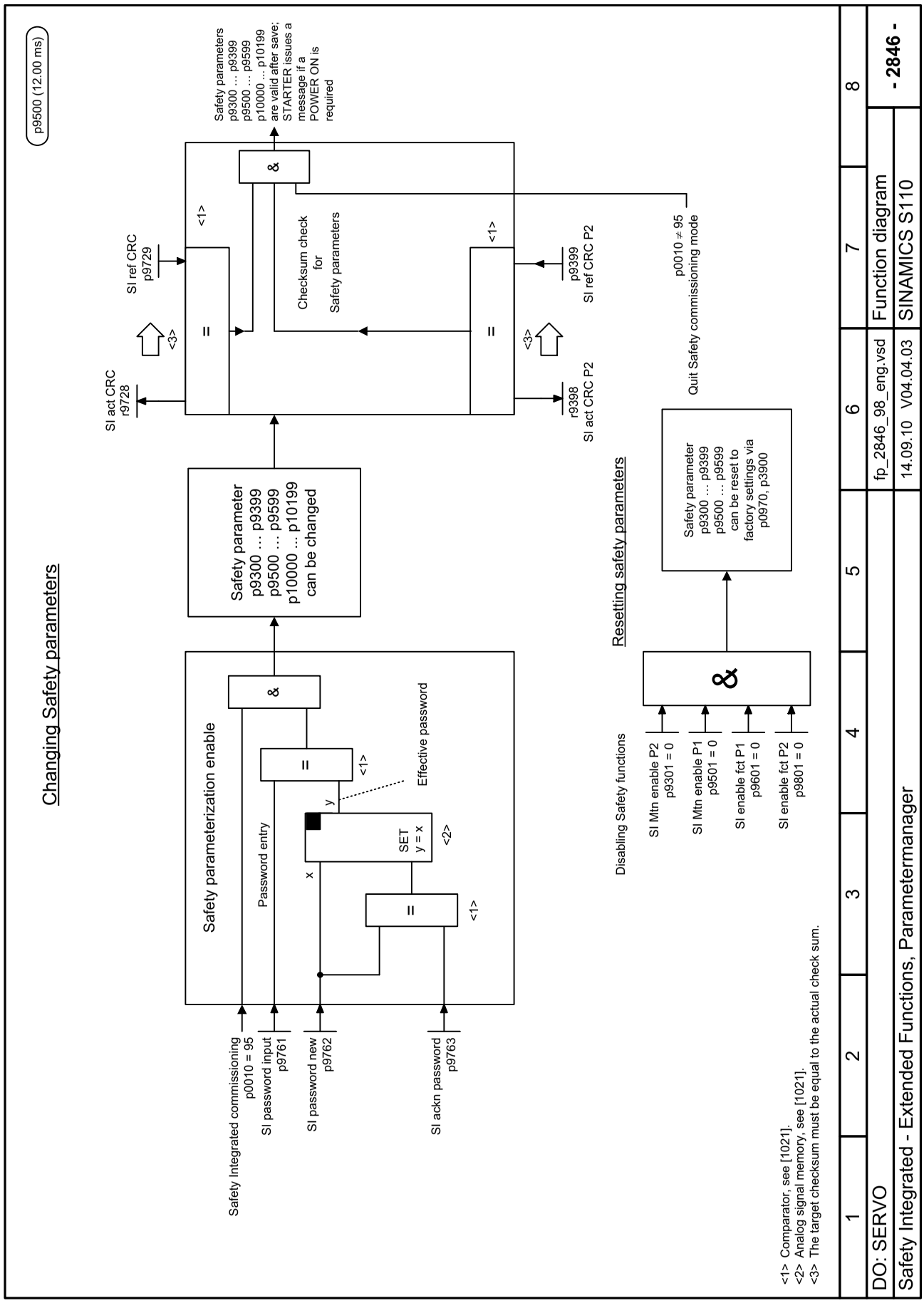

Fig. 3-83 2846 – Extended Functions, parameter manager

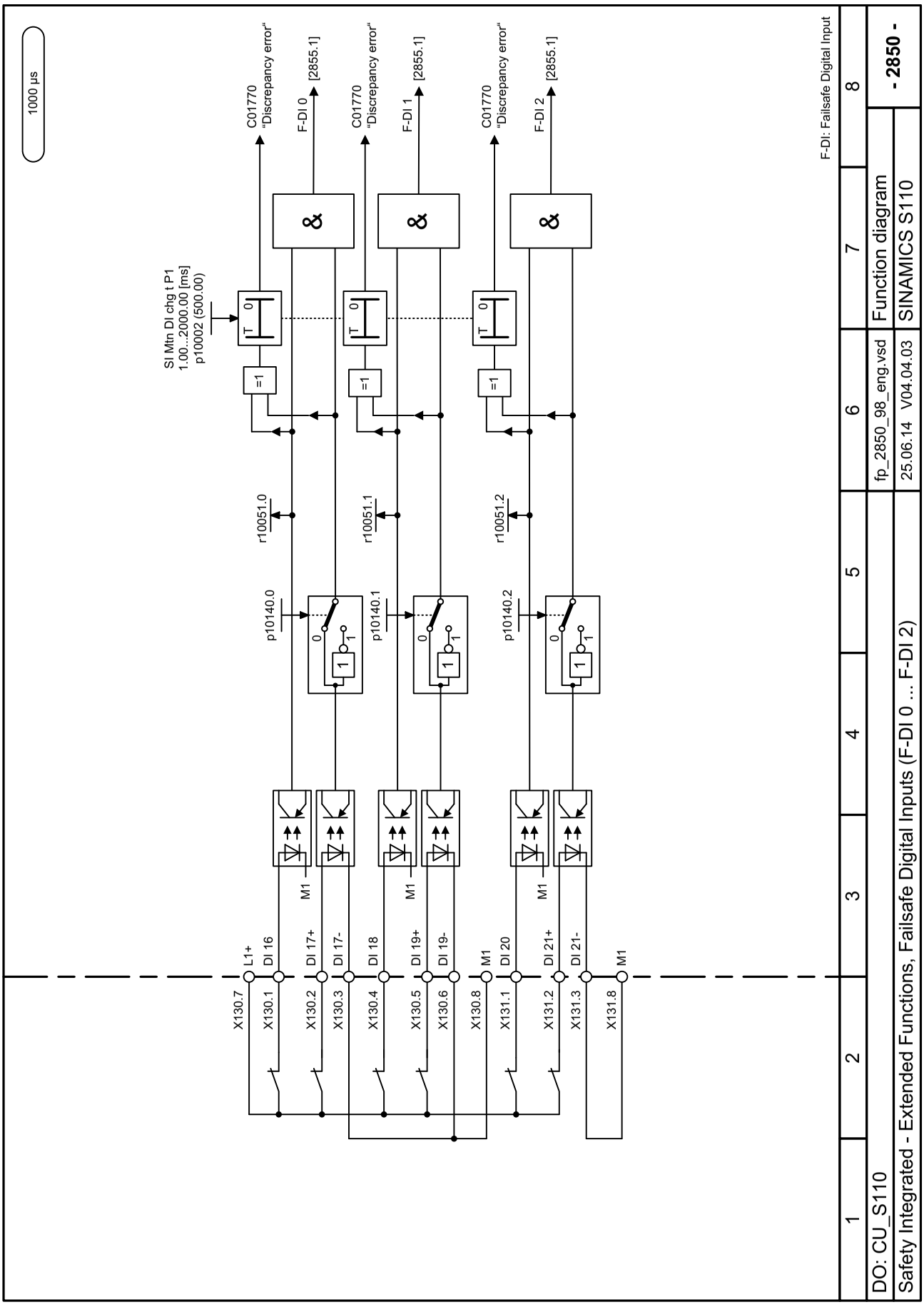

Fig. 3-84 2850 – Extended Functions, fail-safe digital inputs (F-DI 0 ... F-DI 2)

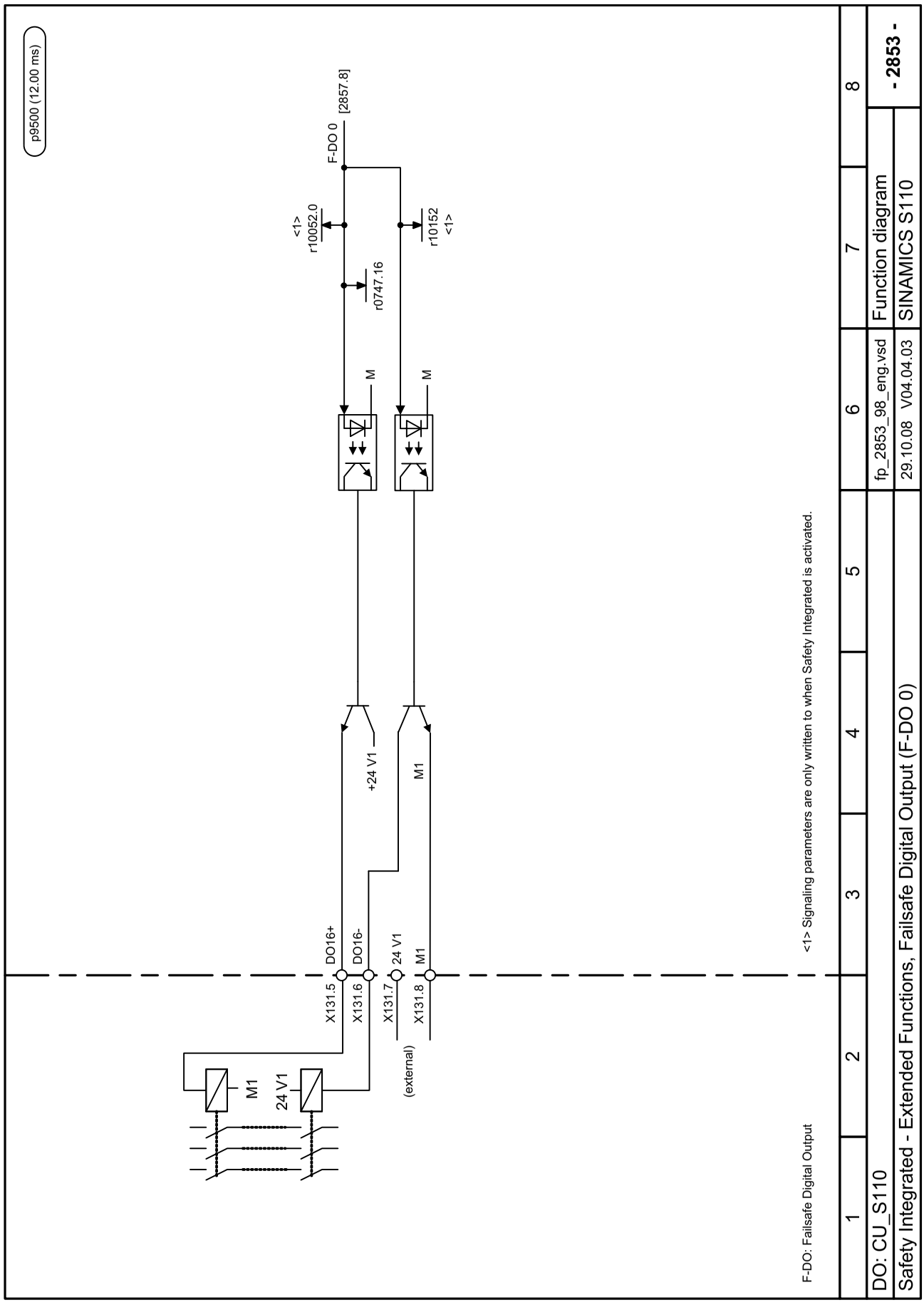

Fig. 3-85 2853 – Extended Functions, fail-safe digital output (F-DO 0)

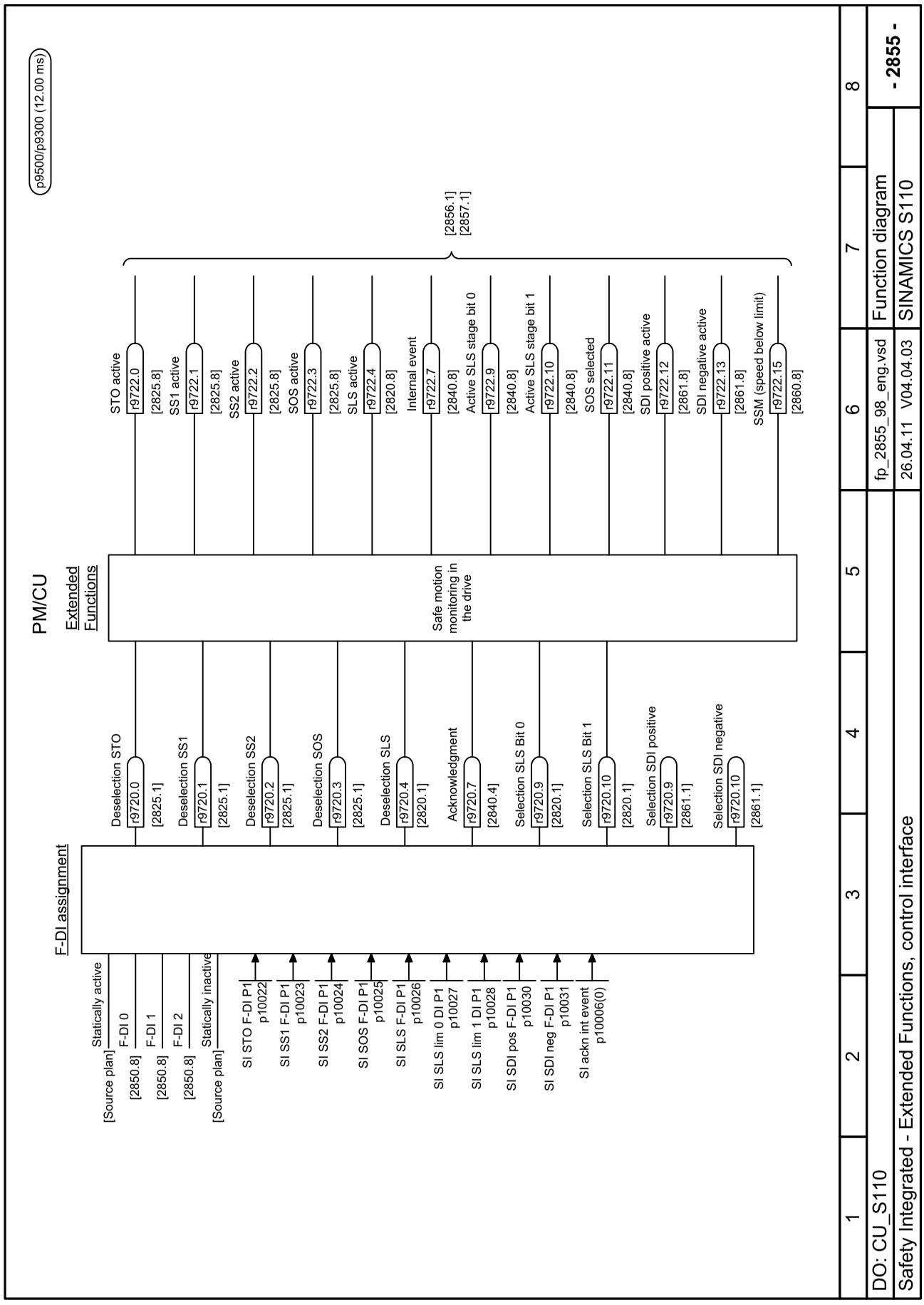

Fig. 3-86 2855 – Extended Functions, control interface

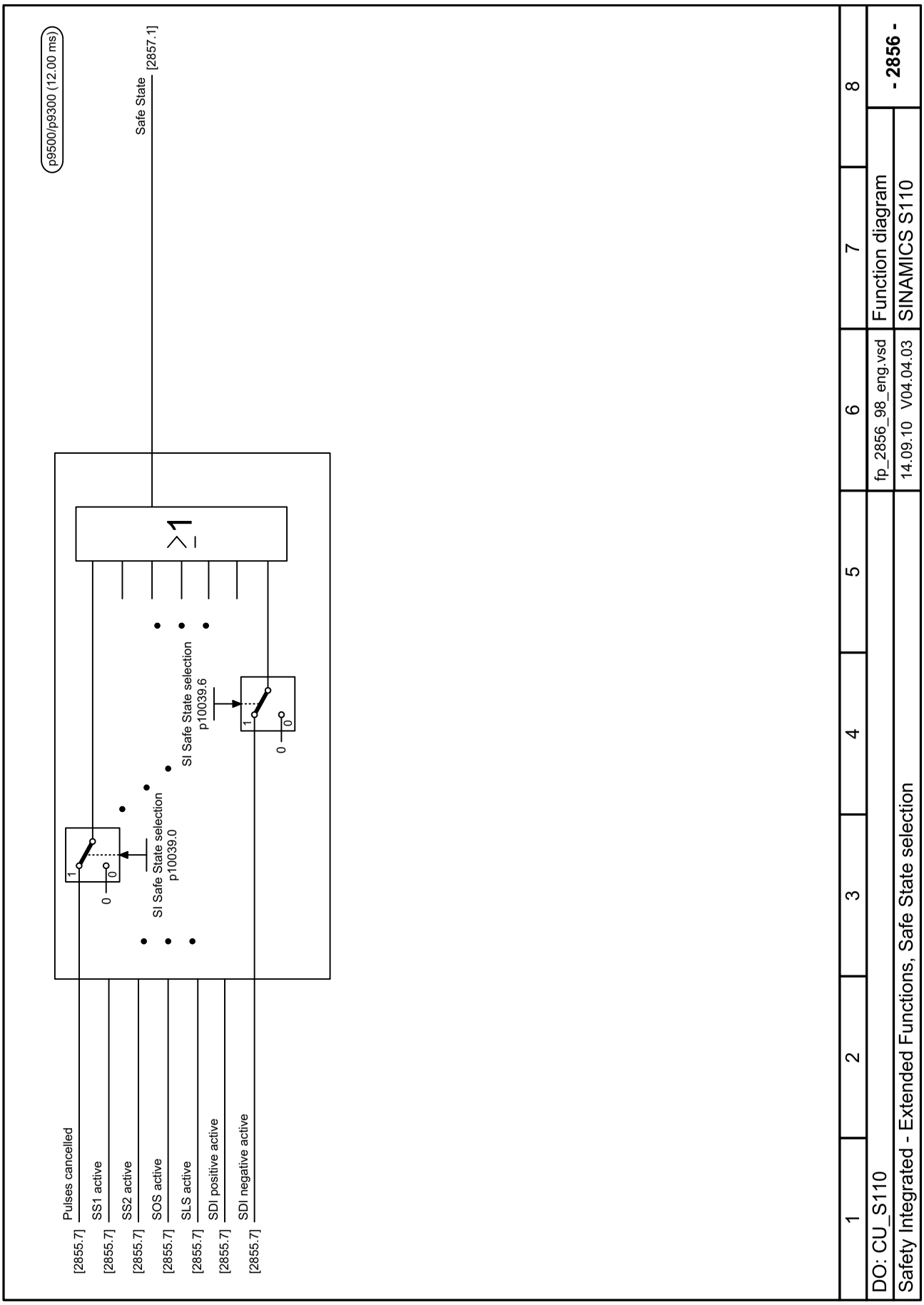

Fig. 3-87 2856 – Extended Functions, Safe State selection

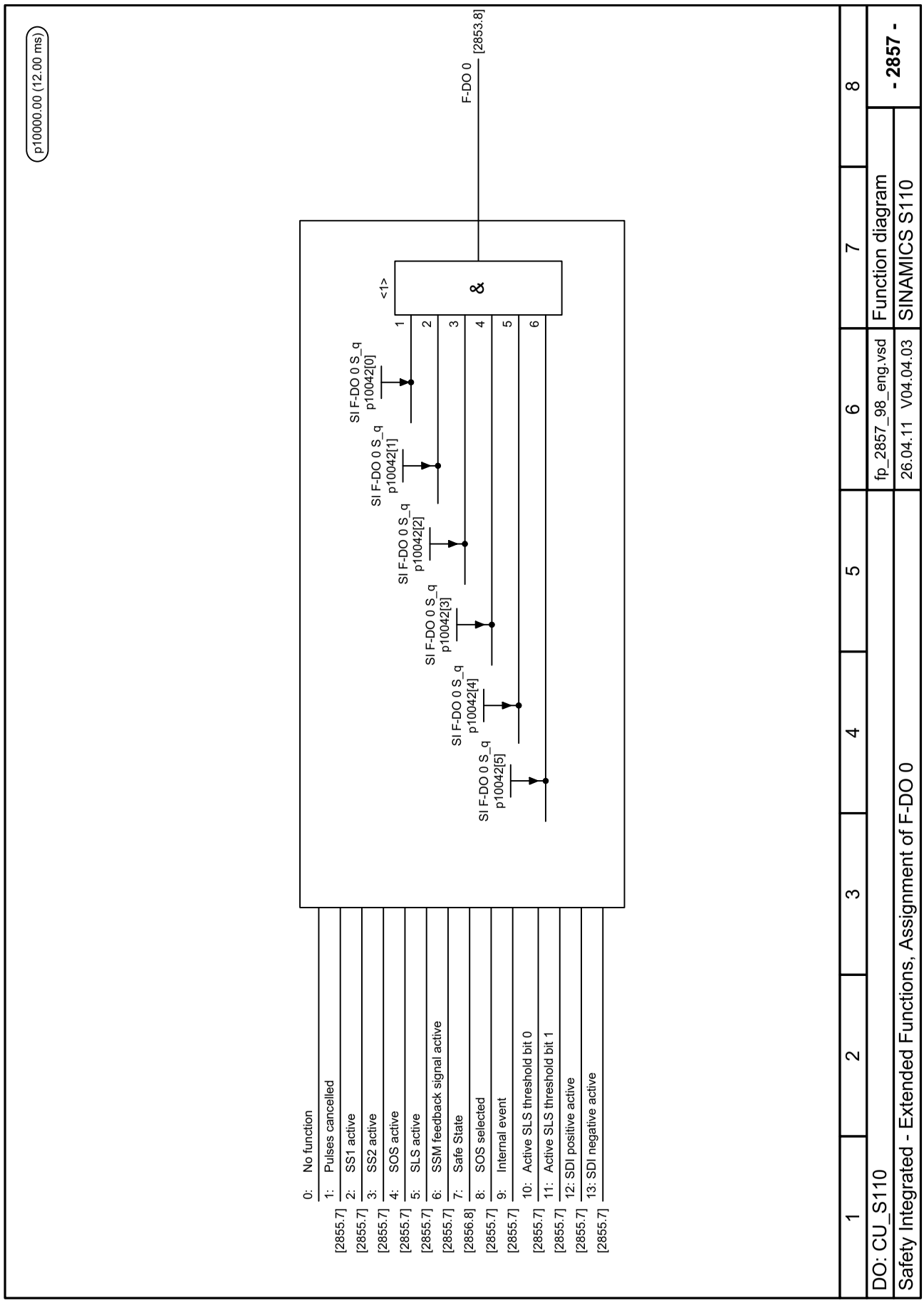

Fig. 3-88 2857 – Extended Functions, assignment (F-DO 0)

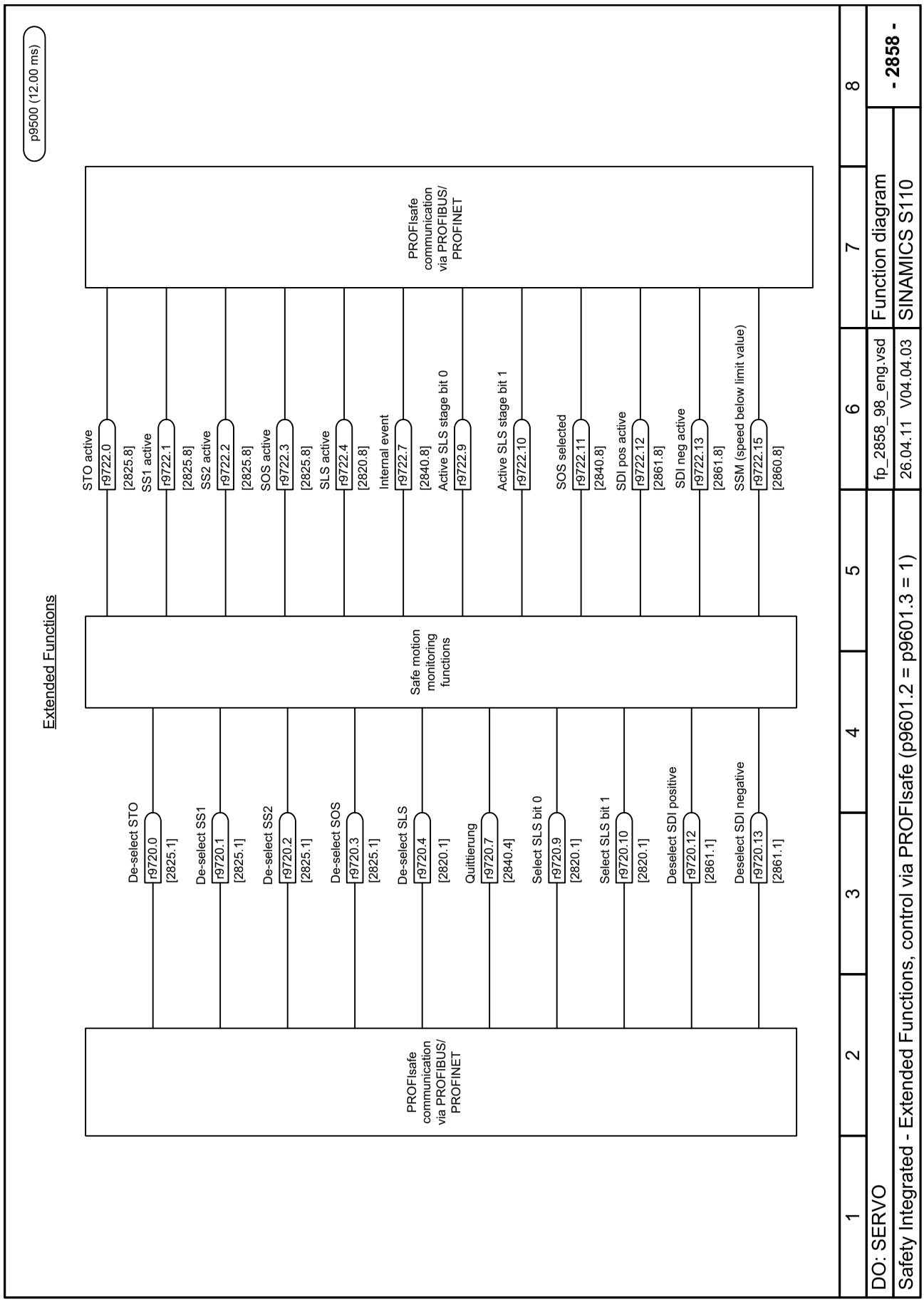

Fig. 3-89 2858 – Extended Functions, control via PROFIsafe (p9601.2 = p9601.3 = 1)

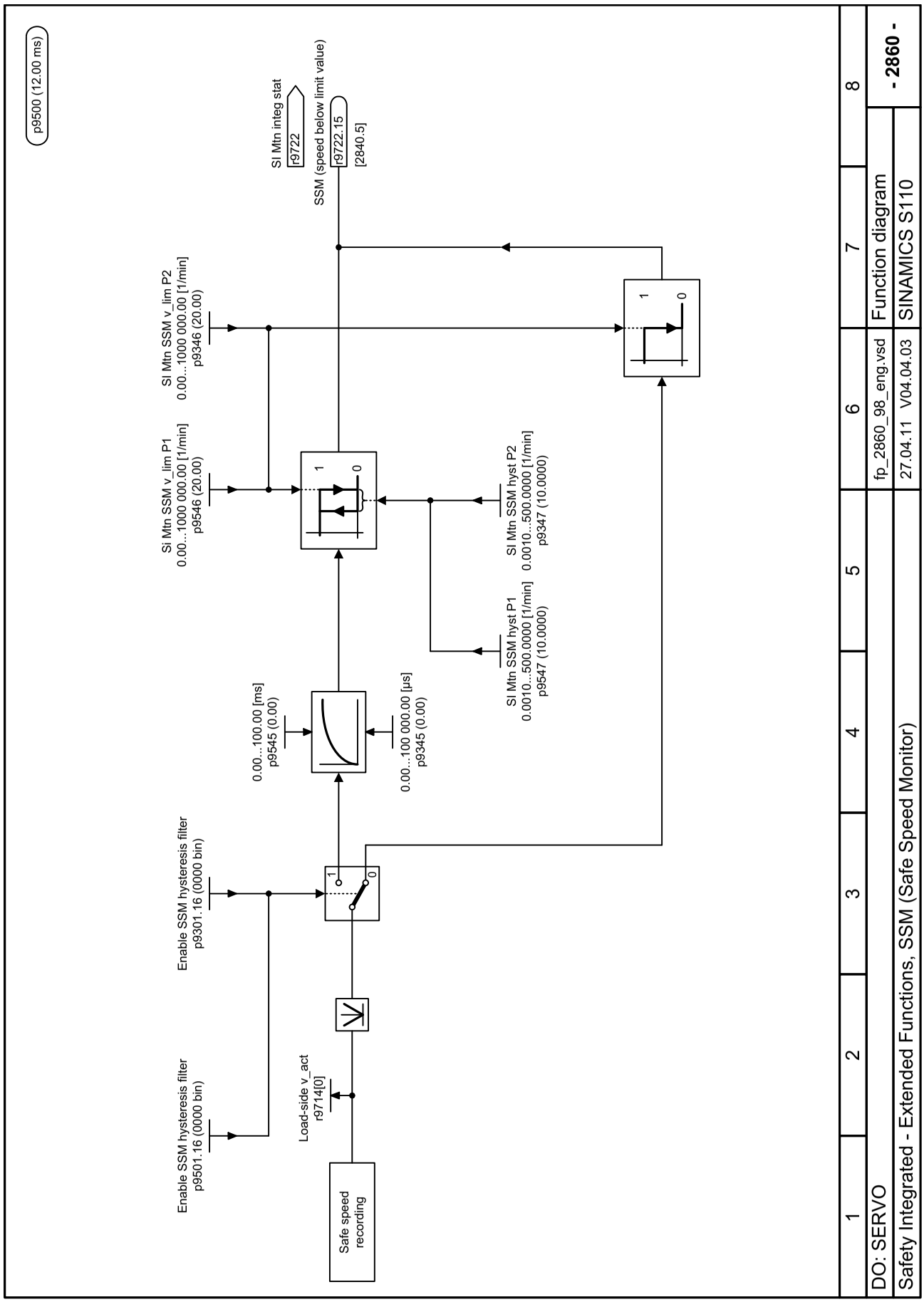

Fig. 3-90 2860 – Extended Functions, SSM (Safe Speed Monitor)

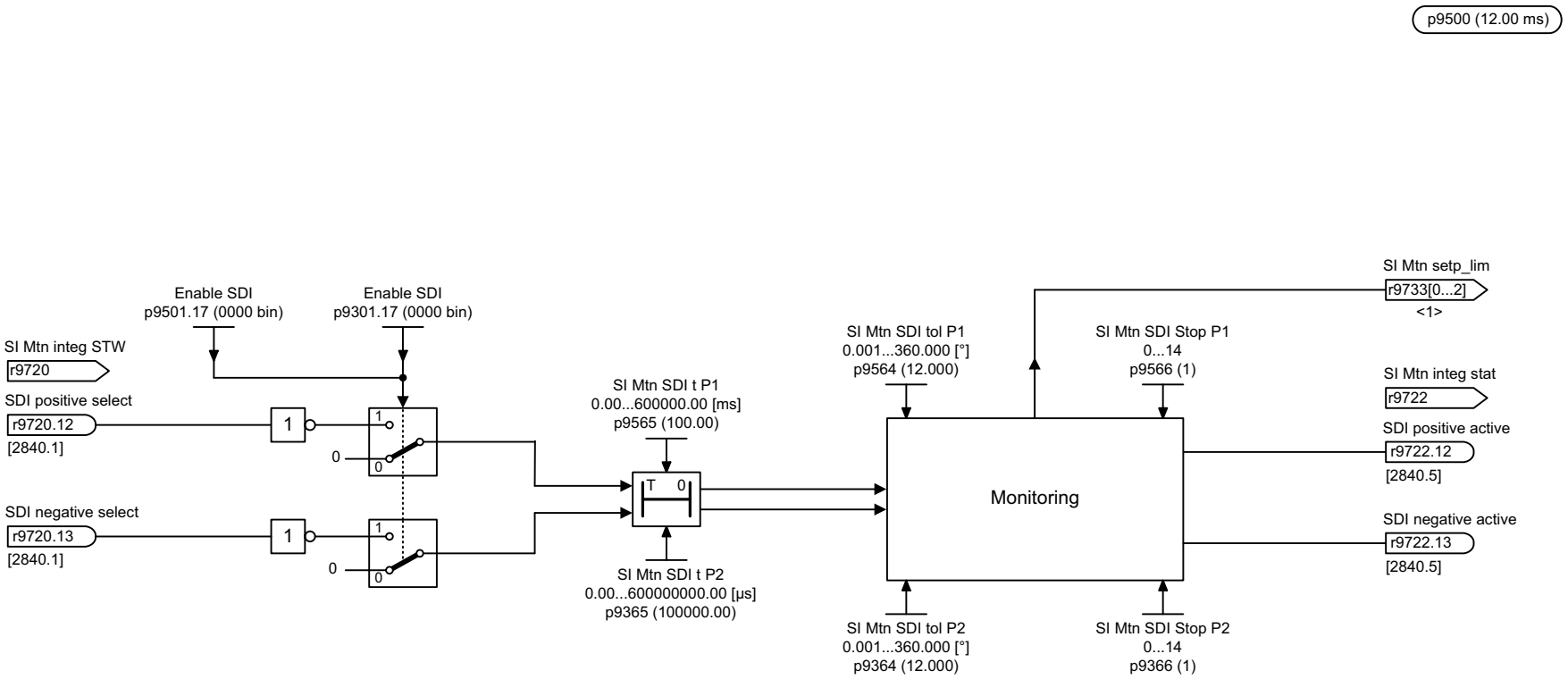

<1>

Selected SI-Function	r9733[0] Setpoint limiting positive	r9733[1] Setpoint limiting negative	r9733[2] Setpoint limit absolute
SDI positive	p1082	0	|p1082|
SDI negative	0	−p1082	|p1082|
SDI positive + SLSx	p9531[x] x p9533	0	|p9531[x] x p9533|
SDI negativ + SLSx	0	−p9531[x] x p9533	|p9531[x] x p9533|

1	2	3	4	5	6	7	8
DO: SERVO					fp_2861_98_eng.vsd	Function diagram	- 2861 -
Safety Integrated - Extended Functions, SDI (Safe Direction)					27.04.11 V04.04.03	SINAMICS S110	

Fig. 3-91 2861 – Extended Functions, SDI (Safe Direction)

3.10 Setpoint channel

Function block diagrams

3010 – Fixed speed setpoints	818
3020 – Motorized potentiometer	819
3030 – Main/supplementary setpoint, setpoint scaling, jogging	820
3040 – Direction limitation and direction reversal	821
3050 – Skip frequency bands and speed limitations	822
3060 – Basic ramp-function generator	823
3070 – Extended ramp-function generator	824
3080 – Ramp-function generator selection, status word, tracking	825

Fig. 3-92 3010 – Fixed speed setpoints

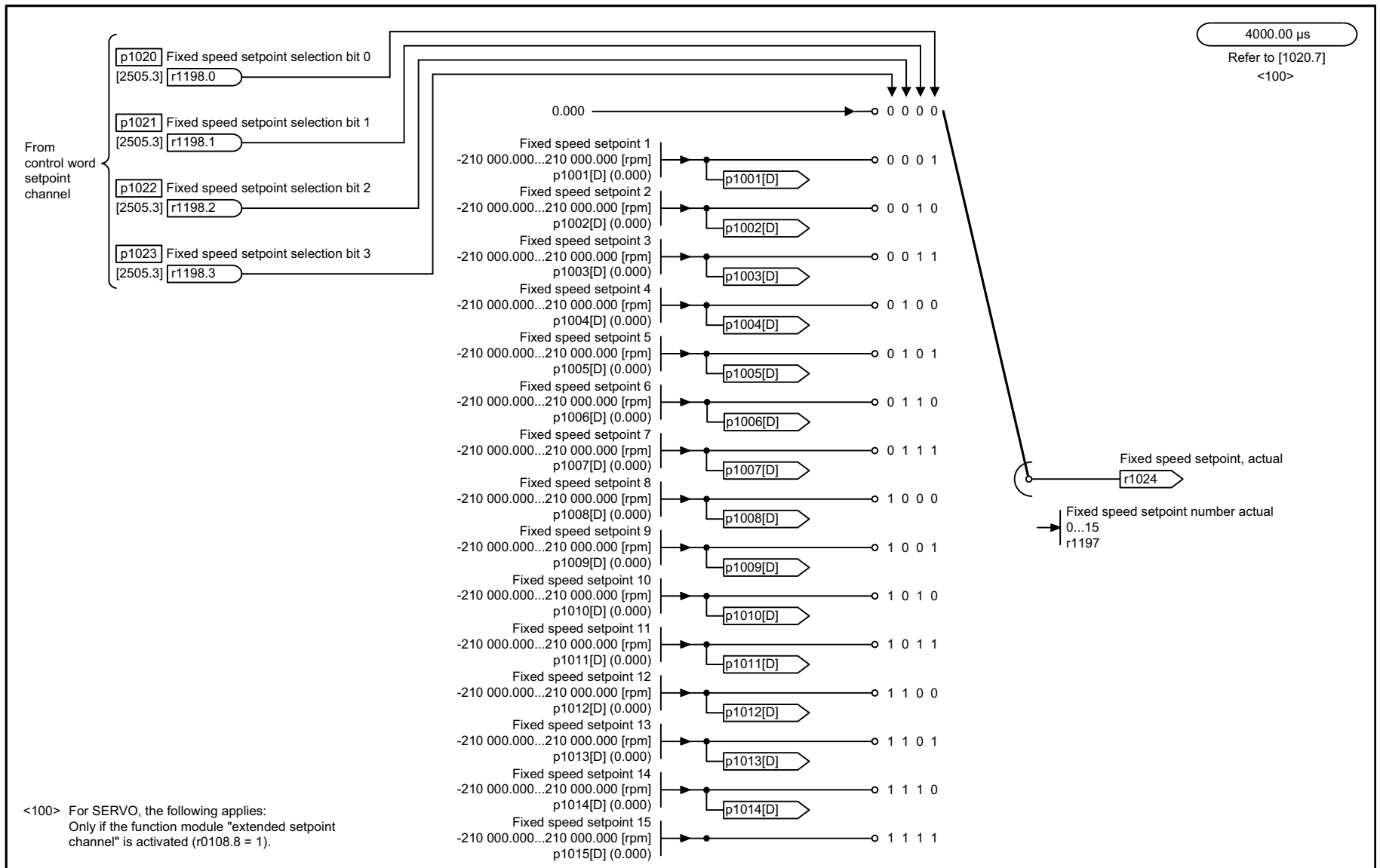

1	2	3	4	5	6	7	8
DO: SERVO					fp_3010_98_eng.vsd	Function diagram	- 3010 -
Setpoint channel - Fixed speed setpoints					30.09.11 V04.04.03	SINAMICS S110	

Fig. 3-93 3020 – Motorized potentiometer

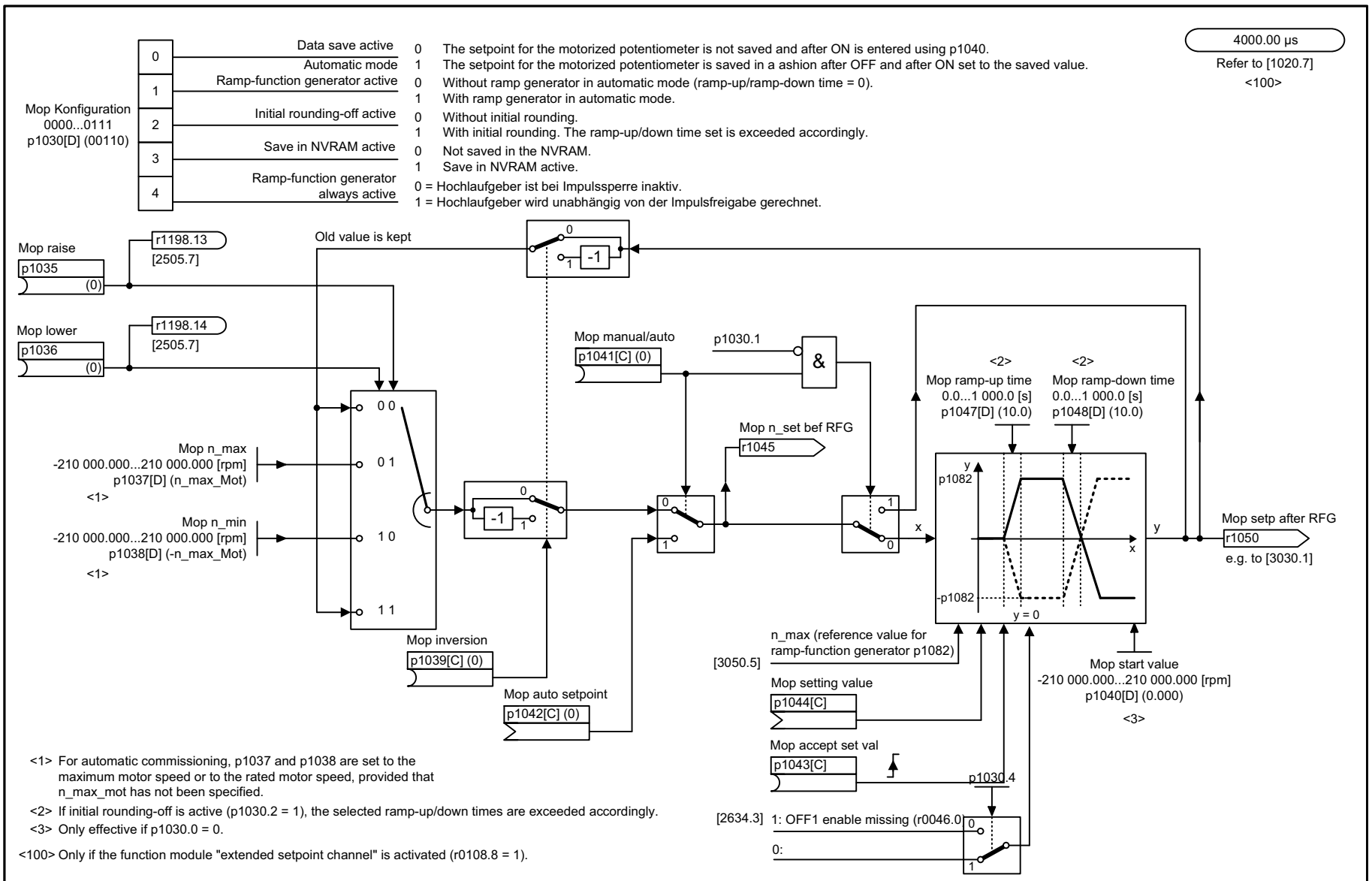

1	2	3	4	5	6	7	8
DO: SERVO					fp_3020_98_eng.vsd	Function diagram	- 3020 -
Setpoint channel - Motorized potentiometer					30.11.11 V04.04.03	SINAMICS S110	

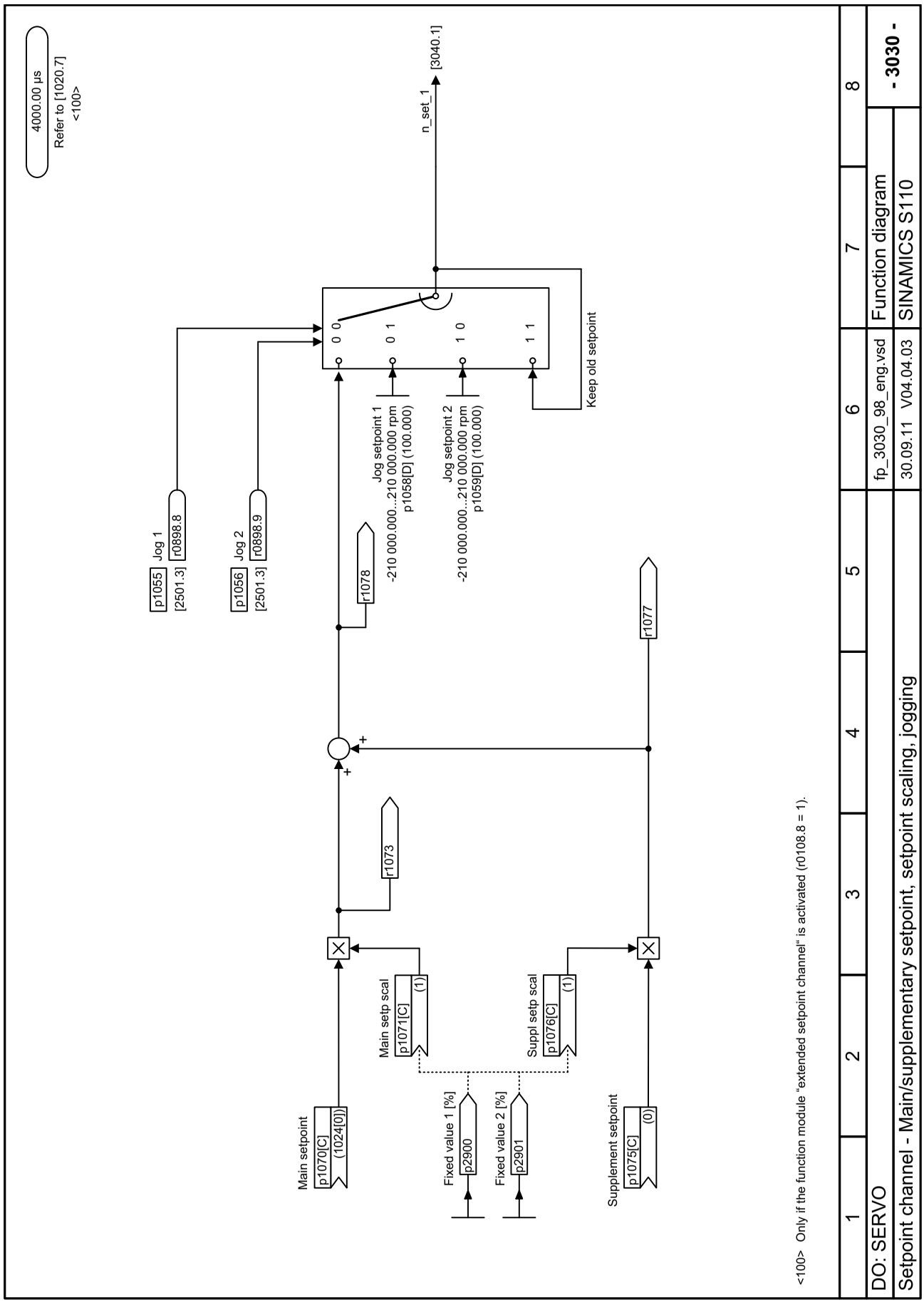

Fig. 3-94 3030 – Main/supplementary setpoint, setpoint scaling, jogging

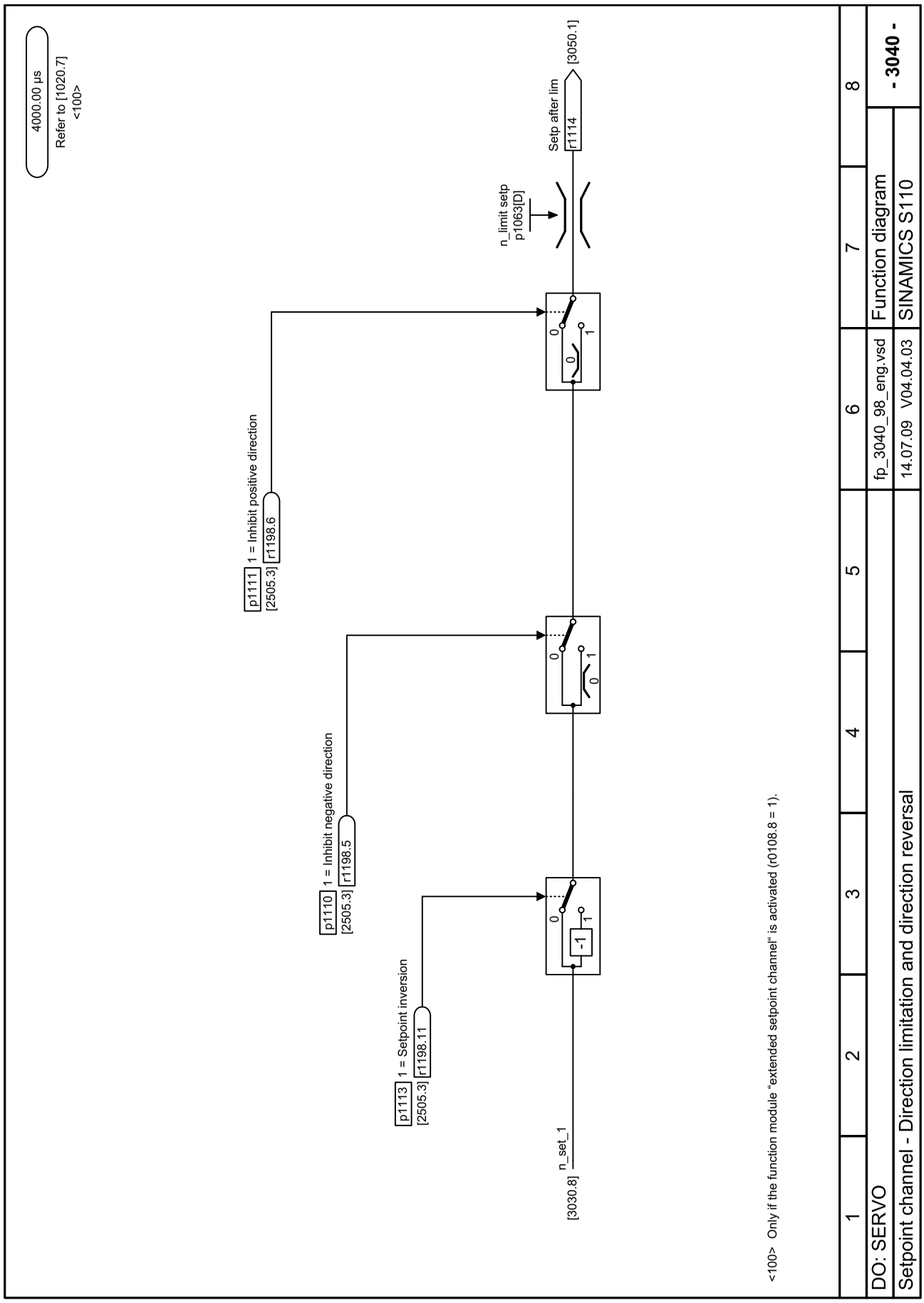

Fig. 3-95 3040 – Direction limitation and direction reversal

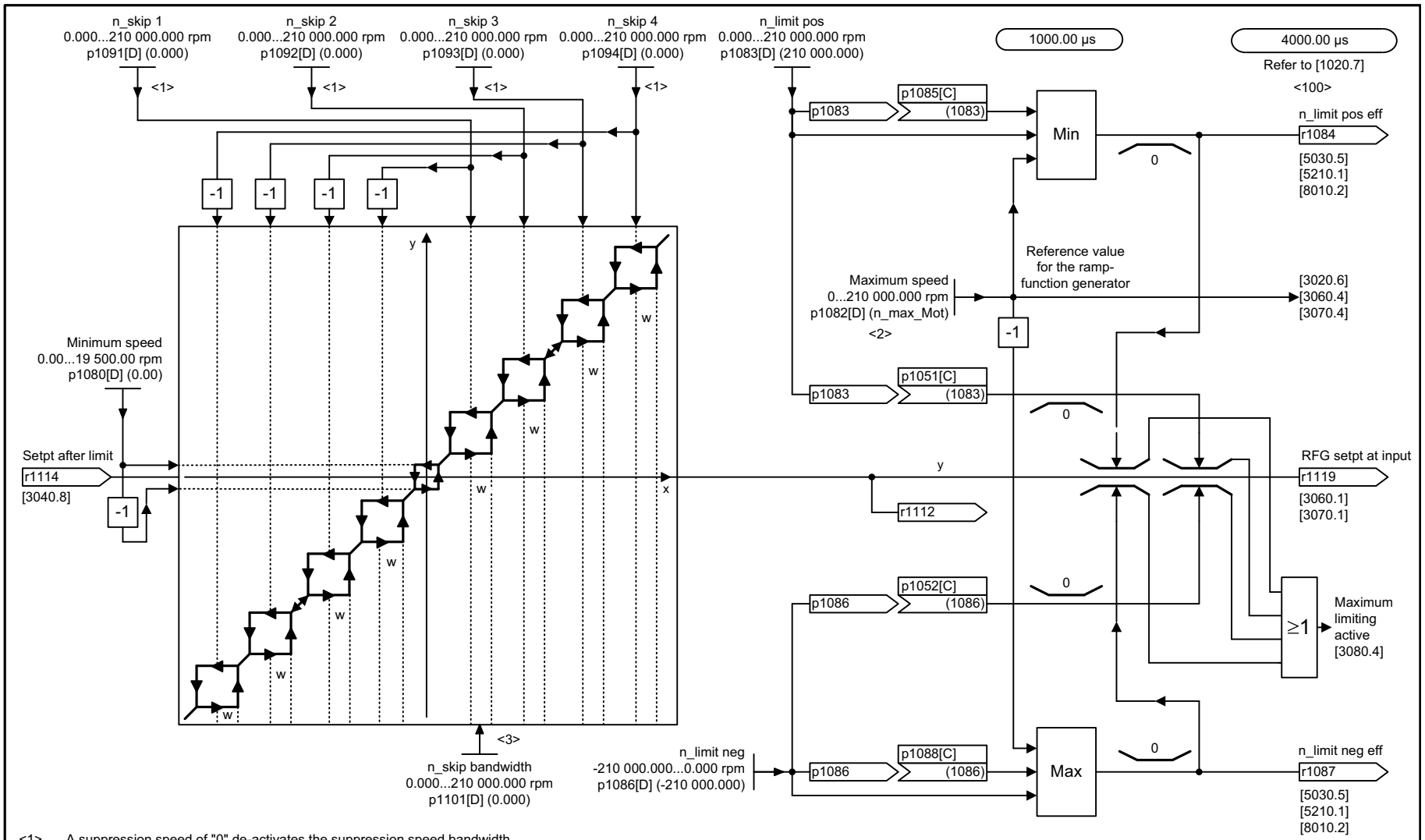

<1> A suppression speed of "0" de-activates the suppression speed bandwidth.
<2> The setting range of p1082 is limited to n_max_mot.
<3> If the drive is not stopped via the input setpoint, but via controlled intervention, the lower hysteresis branch is relevant after a subsequent run-up.
<100> For SERVO, the following applies: Only if the function module "Extended setpoint channel" is activated (r0108.8 = 1). For r0108.8 = 0, [3095] applies for the generation of the speed limits.

1	2	3	4	5	6	7	8
DO: SERVO					fp_3050_98_eng.vsd	Function diagram	- 3050 -
Setpoint channel - Skip frequency bands and speed limitations					30.09.11 V04.04.03	SINAMICS S110	

Fig. 3-96 3050 – Skip frequency bands and speed limitations

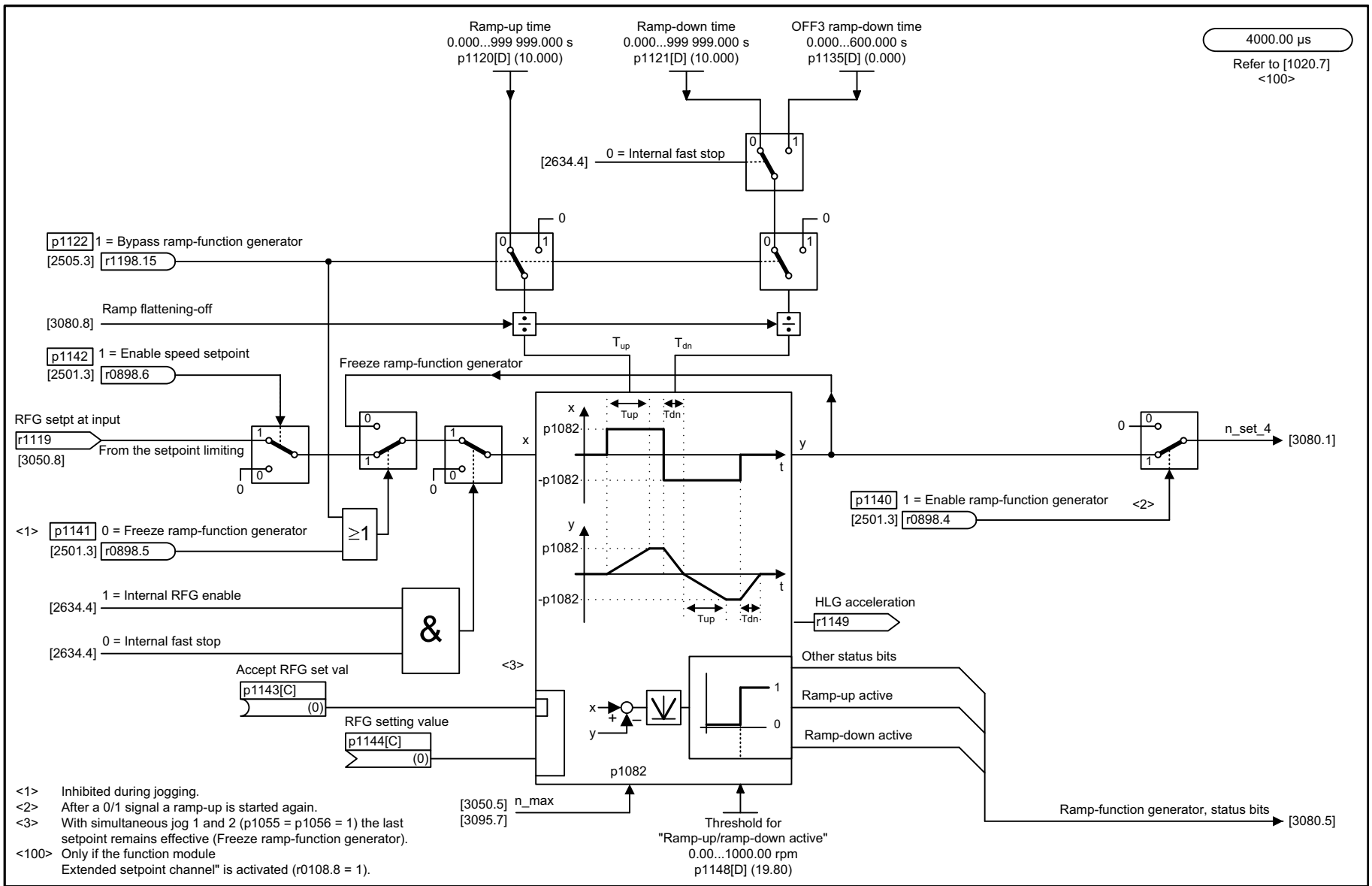

<1> Inhibited during jogging.
<2> After a 0/1 signal a ramp-up is started again.
<3> With simultaneous jog 1 and 2 (p1055 = p1056 = 1) the last setpoint remains effective (Freeze ramp-function generator).
<100> Only if the function module Extended setpoint channel" is activated (r0108.8 = 1).

1	2	3	4	5	6	7	8
DO: SERVO					fp_3060_98_eng.vsd	Function diagram	- 3060 -
Setpoint channel - Basic ramp-function generator					30.09.11 V04.04.03	SINAMICS S110	

Fig. 3-97 3060 – Basic ramp-function generator

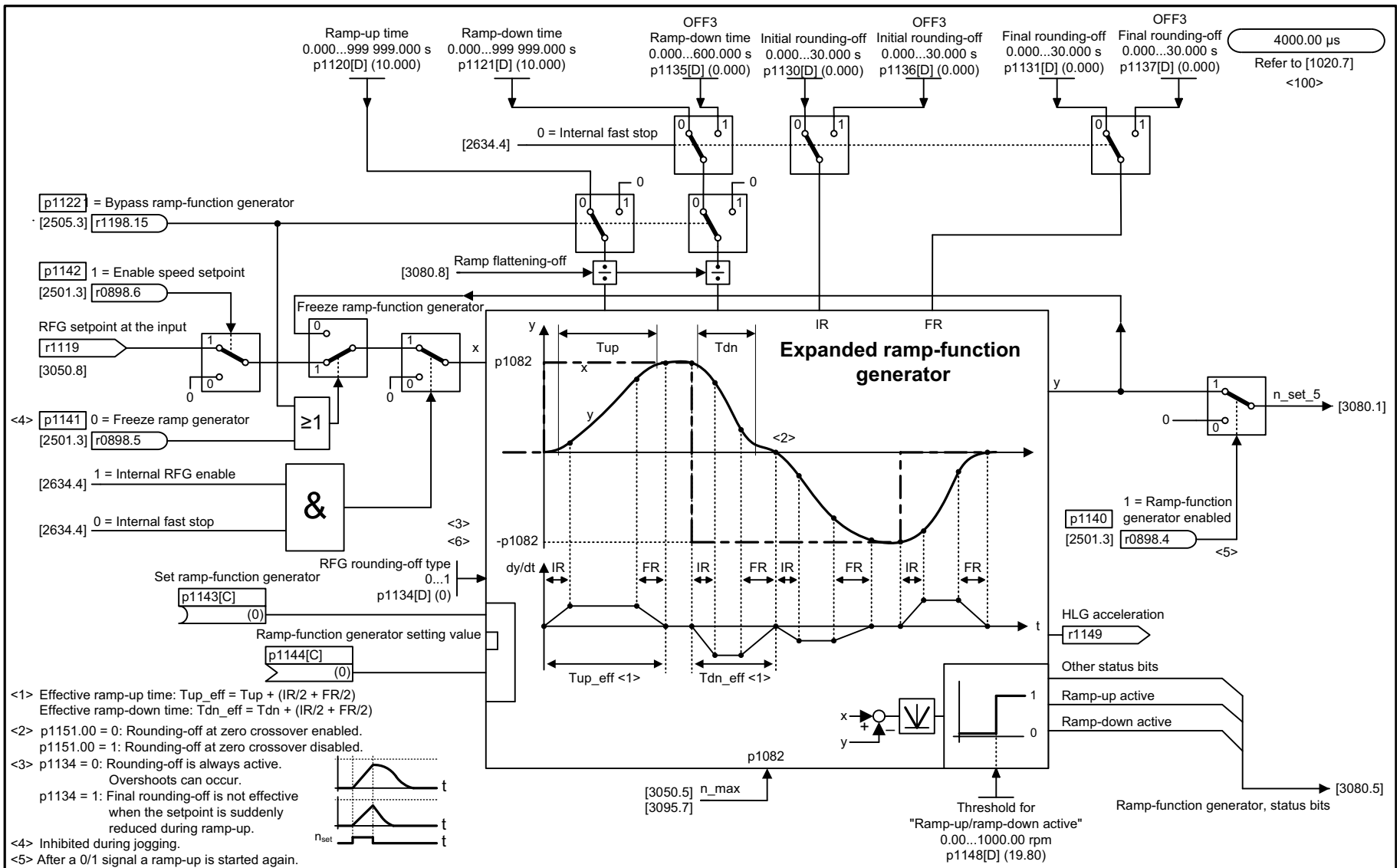

1	2	3	4	5	6	7	8
DO: SERVO					fp_3070_98_eng.vsd	Function diagram	- 3070 -
Setpoint channel - Extended ramp-function generator					30.09.11 V04.04.03	SINAMICS S110	

Fig. 3-98 3070 – Extended ramp-function generator

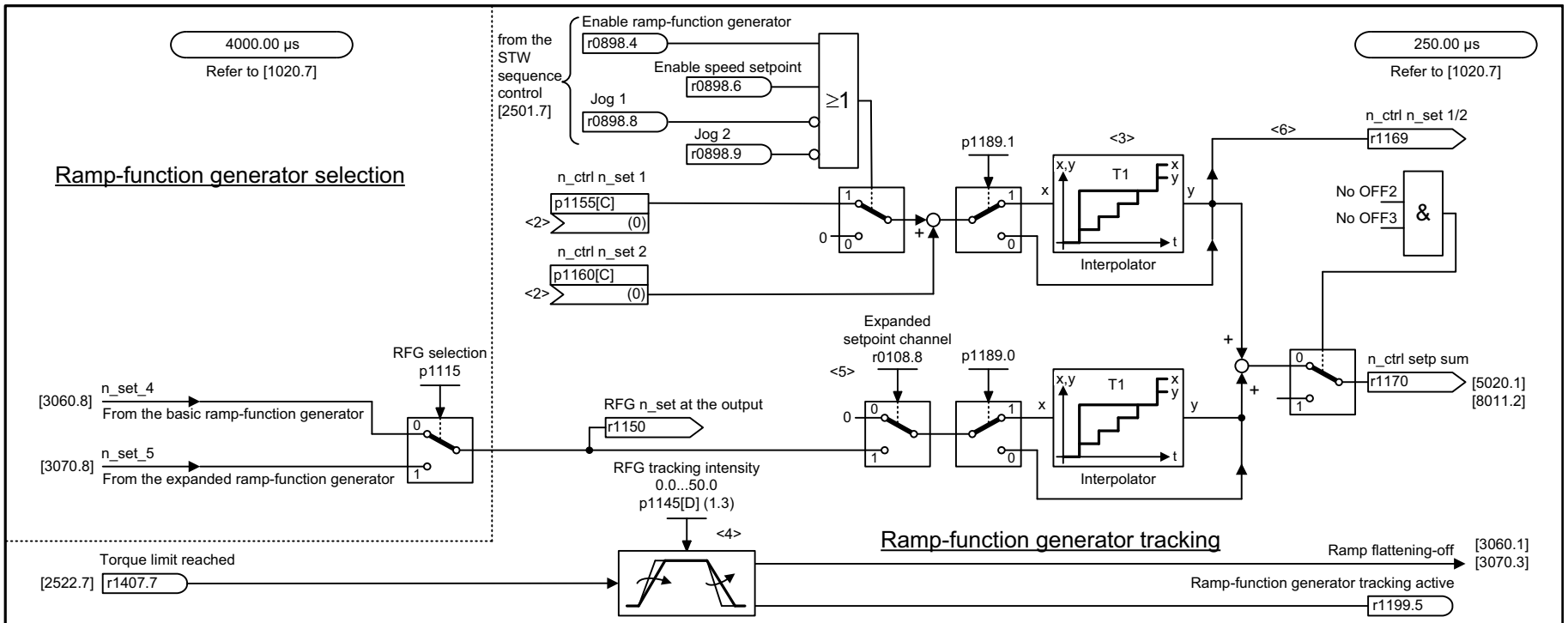

<1> For p1145 > 0, ramp-function generator tracking is activated when the torque limiting responds. This means that the speed controller output only exceeds the torque limit by a deviation that can be set via p1145.

<2> For OFF1/OFF3, the ramp-function generator ramp is active. The ramp-function generator is set to the actual value and stops the drive with the ramp-downtime (p1121 or p1135). STW1.4 (enable ramp-function generator) is effective while the drive is stopped via the ramp-function generator. Depending on the p1115, the basic ramp-function generator [3060] or the extended ramp-function generator [3070] is effective. When the function module "extended setpoint channel" (r0108.8 = 0) is not active for OFF1/OFF3, the down ramp of the basic ramp-function generator is effective (refer to n_set_4 on [3060.8]).

<3> The interpolator is only effective for clock-cycle synchronous PROFIBUS operation and sign-of-life received from the master (STW2.12 ... STW2.15).

<4> Behavior of the response ramp of the torque limiting:
p1145 = 0.0: No ramp-function generator tracking. The ramp-function generator ramp is no longer in the range of the speed actual value.
p1145 = 1.0: The ramp-function generator ramp remains as close as possible to the speed actual value.
p1145 > 1.0: The ramp-function generator ramp is steeper than for p1145 = 1.0 (higher "speed following error").

<5> For SERVO, the following applies: Only when the function module "extended setpoint channel" is activated (r0108.8 = 1).

<6> The value is displayed correctly only with r0899.2 = 1 (Operation enabled).

Ramp-function generator status word

[3060.8] [3070.8] → RFG ZSW r1199

[3060.8] [3070.8] → ≥1 → r1199.2 [8010.5]

[3080.8] [3050.8] → <1>

Bit	Ramp-function generator status word
0	Ramp-up active
1	Ramp-down active
2	Ramp-function generator active
3	Ramp-function generator set
4	Ramp-function generator held
5	Ramp-function generator tracking active
6	Maximum limiting active
7	Reserved
8	Reserved
9	Reserved
10	Reserved
11	Reserved
12	Reserved
13	Reserved
14	Reserved
15	Reserved

1	2	3	4	5	6	7	8
DO: SERVO					fp_3080_98_eng.vsd	Function diagram	- 3080 -
Setpoint channel - Ramp-function generator selection, status word, tracking					15.07.09 V04.04.03	SINAMICS S110	

Fig. 3-99 3080 – Ramp-function generator selection, status word, tracking

3.11 Setpoint channel not activated

Function block diagrams

3095 – Generation of the speed limits (r0108.8 = 0) 827

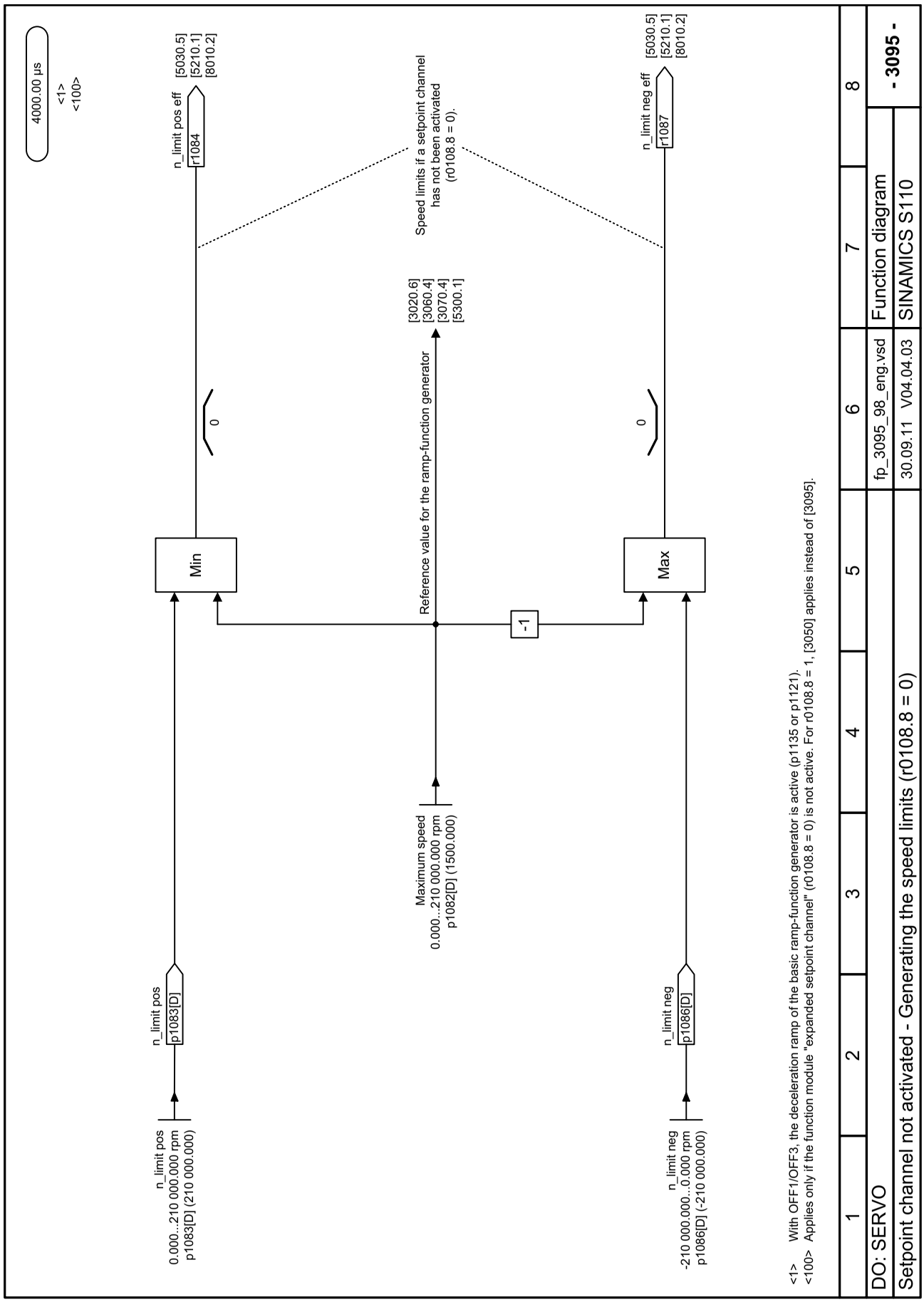

Fig. 3-100 3095 – Generation of the speed limits (r0108.8 = 0)

3.12 Basic positioner (EPOS)

Function block diagrams

3610 – Jog mode (r0108.4 = 1)	829
3612 – Referencing/reference point approach mode (r0108.4 = 1, p2597 = 0 signal)	830
3614 – Flying referencing mode (r0108.4 = 1, p2597 = 1 signal)	831
3615 – Traversing block mode, external block change (r0108.4 = 1)	832
3616 – Traversing block mode (r0108.4 = 1)	833
3617 – Travel to fixed stop (r0108.4 = 1)	834
3618 – Direct setpoint input/MDI mode, dynamic values (r0108.4 = 1)	835
3620 – Direct setpoint input/MDI mode (r0108.4 = 1)	836
3625 – Mode control (r0108.4 = 1)	837
3630 – Traversing range limits (r0108.4 = 1)	838
3635 – Interpolator (r0108.4 = 1)	839
3640 – Control word, block selection/MDI selection (r0108.4 = 1)	840
3645 – Status word 1 (r0108.3 = 1, r0108.4 = 1)	841
3646 – Status word 2 (r0108.3 = 1, r0108.4 = 1)	842
3650 – Status word, active traversing block/MDI active (r0108.4 = 1)	843

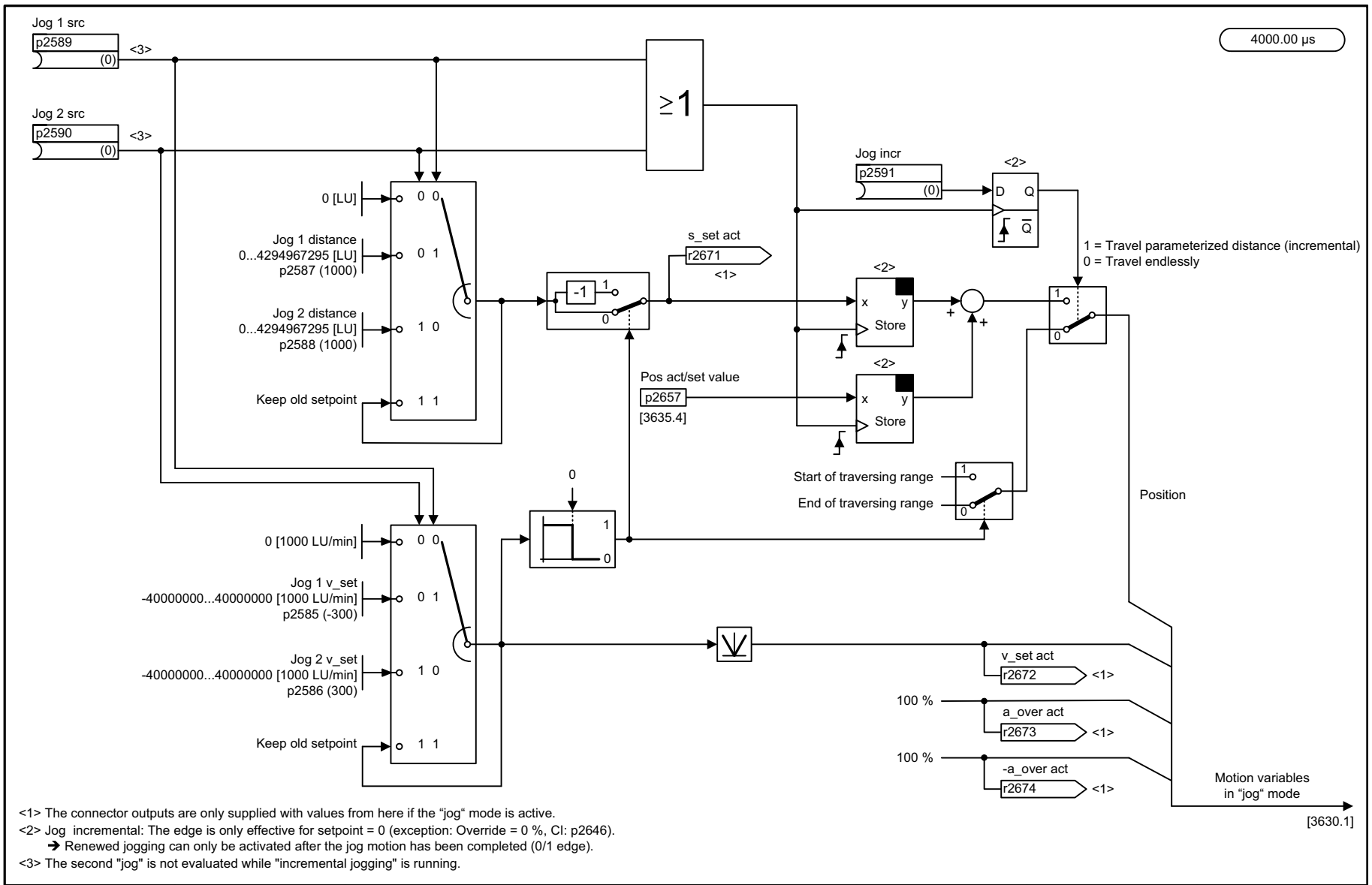

<1> The connector outputs are only supplied with values from here if the "jog" mode is active.
<2> Jog incremental: The edge is only effective for setpoint = 0 (exception: Override = 0 %, CI: p2646).
➔ Renewed jogging can only be activated after the jog motion has been completed (0/1 edge).
<3> The second "jog" is not evaluated while "incremental jogging" is running.

1	2	3	4	5	6	7	8
DO: SERVO					fp_3610_98_eng.vsd	Function diagram	- 3610 -
EPOS - Jog mode (r0108.4 = 1)					04.04.08 V04.04.03	SINAMICS S110	

Fig. 3-101 3610 – Jog mode (r0108.4 = 1)

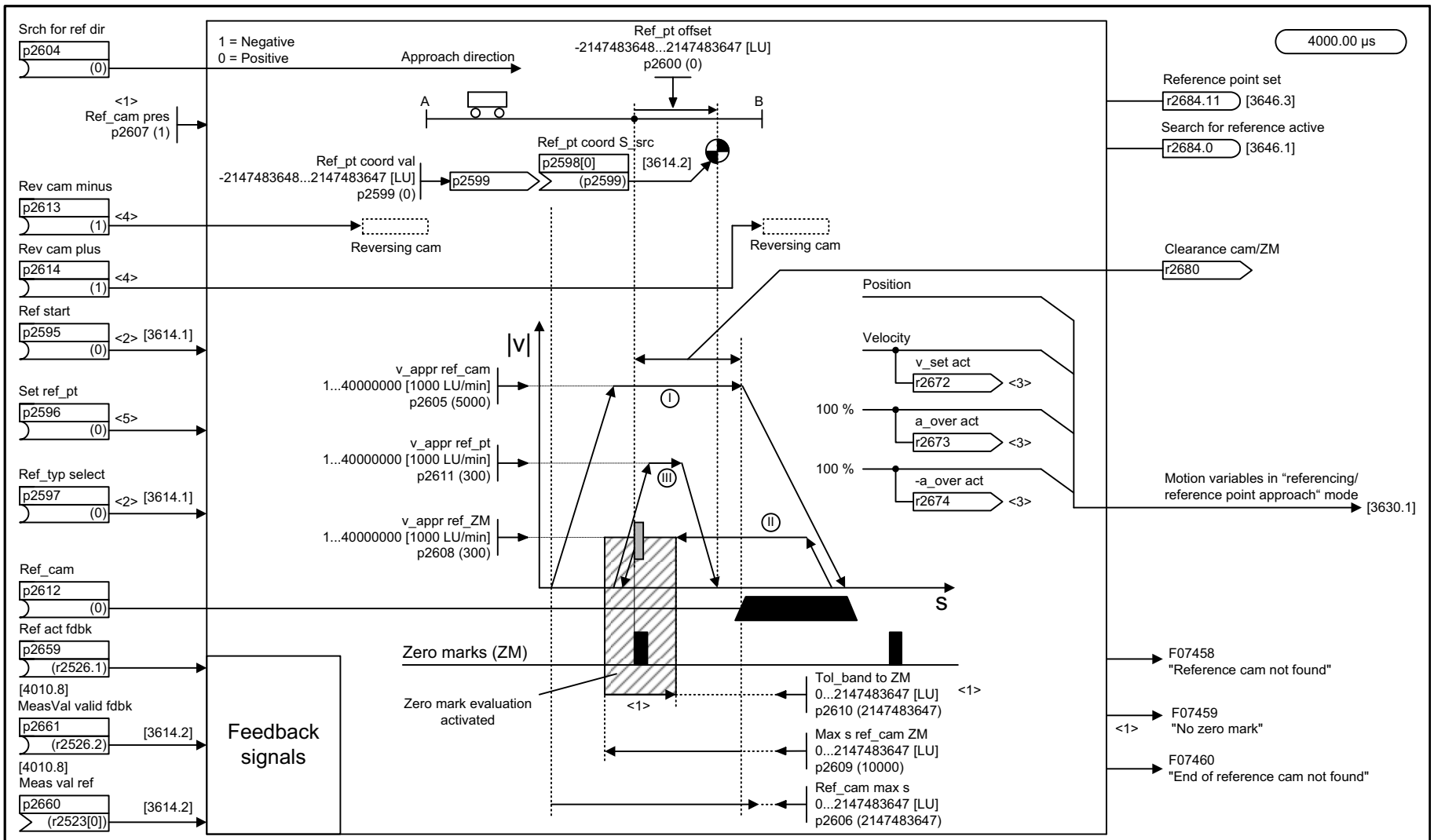

Fig. 3-102 3612 – Referencing/reference point approach mode (r0108.4 = 1, p2597 = 0 signal)

[4010.8] <1> If no reference cam exists, the axis directly moves to the zero mark (in the defined start direction). Without a reference cam, the tolerance bandwidth is not evaluated.
<2> When "flying referencing" is selected (passive referencing, p2597 = 1 signal), this function diagram is of no significance => refer to [3614].
<3> The connector outputs are only supplied with values from here if the “referencing“ mode is active.
<4> The reversing cams are low active. When a cam is actuated, motion (reference cam search) is continued in the opposite direction.
<5> Reference point setting is only effective in the initial state [3625].

1	2	3	4	5	6	7	8
DO: SERVO					fp_3612_98_eng.vsd	Function diagram	- 3612 -
EPOS - Referencing/reference point approach mode (r0108.4 = 1, p2597 = 0 signal)					04.04.08 V04.04.03	SINAMICS S110	

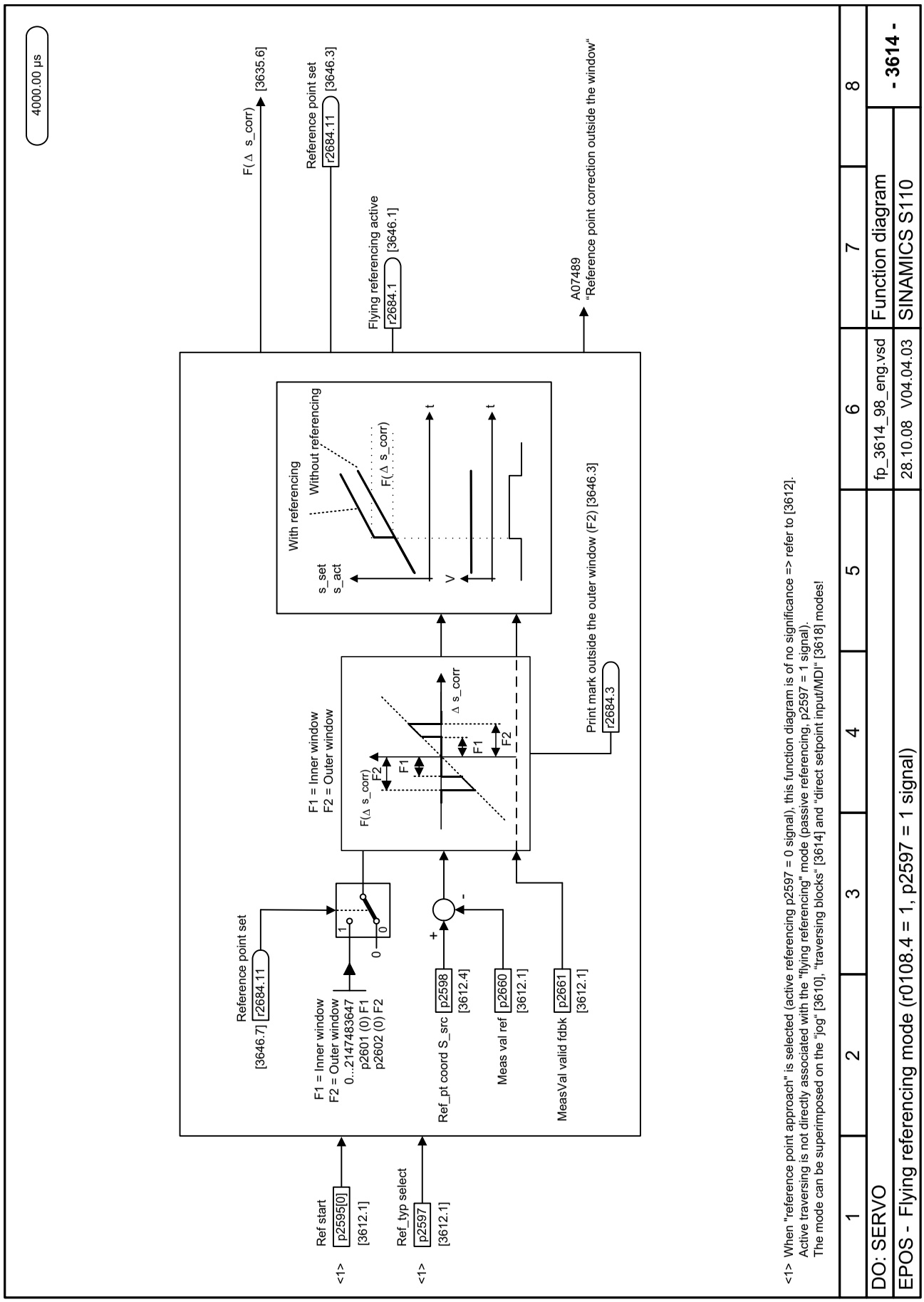

Fig. 3-103 3614 – Flying referencing mode (r0108.4 = 1, p2597 = 1 signal)

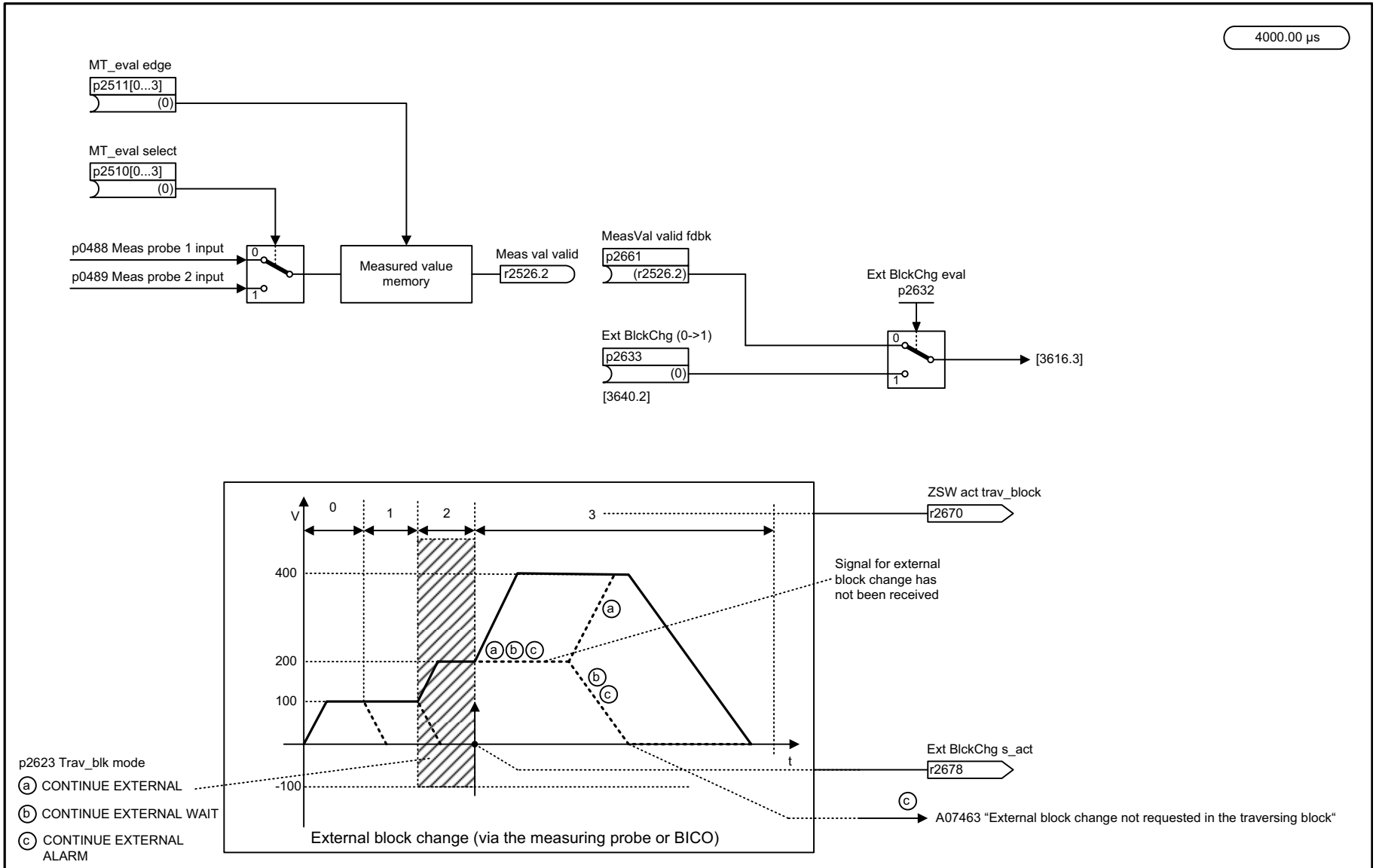

1	2	3	4	5	6	7	8
DO: SERVO					fp_3615_98_eng.vsd	Function diagram	- 3615 -
EPOS - Traversing block mode, external block change (r0108.4 = 1)					04.04.08 V04.04.03	SINAMICS S110	

Fig. 3-104 3615 – Traversing block mode, external block change (r0108.4 = 1)

Fig. 3-105 3616 – Traversing block mode (r0108.4 = 1)

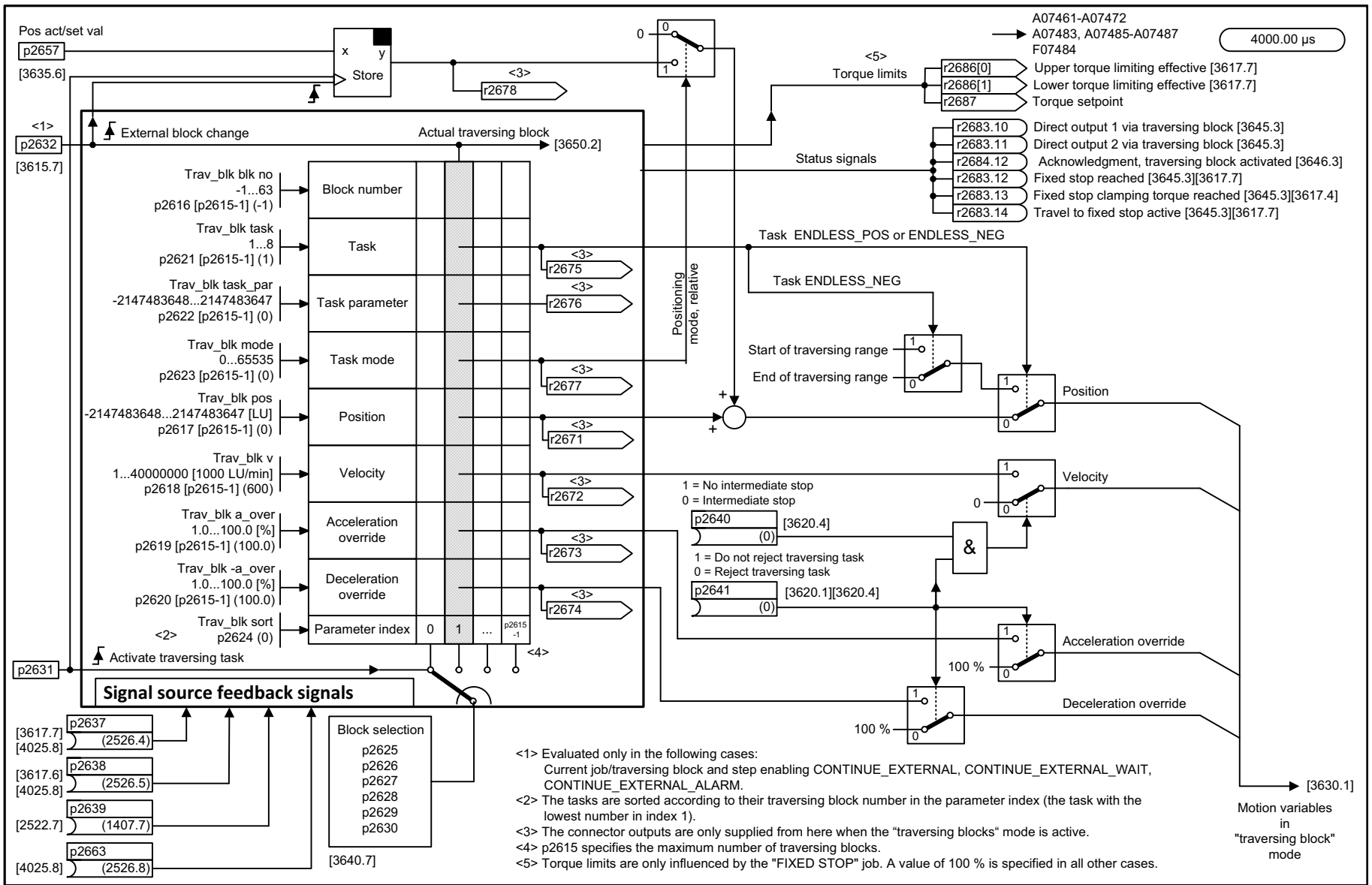

1	2	3	4	5	6	7	8
DO: SERVO					fp_3616_98_eng.vsd	Function diagram	- 3616 -
EPOS - Traversing block mode (r0108.4 = 1)					04.04.08 V04.04.03	SINAMICS S110	

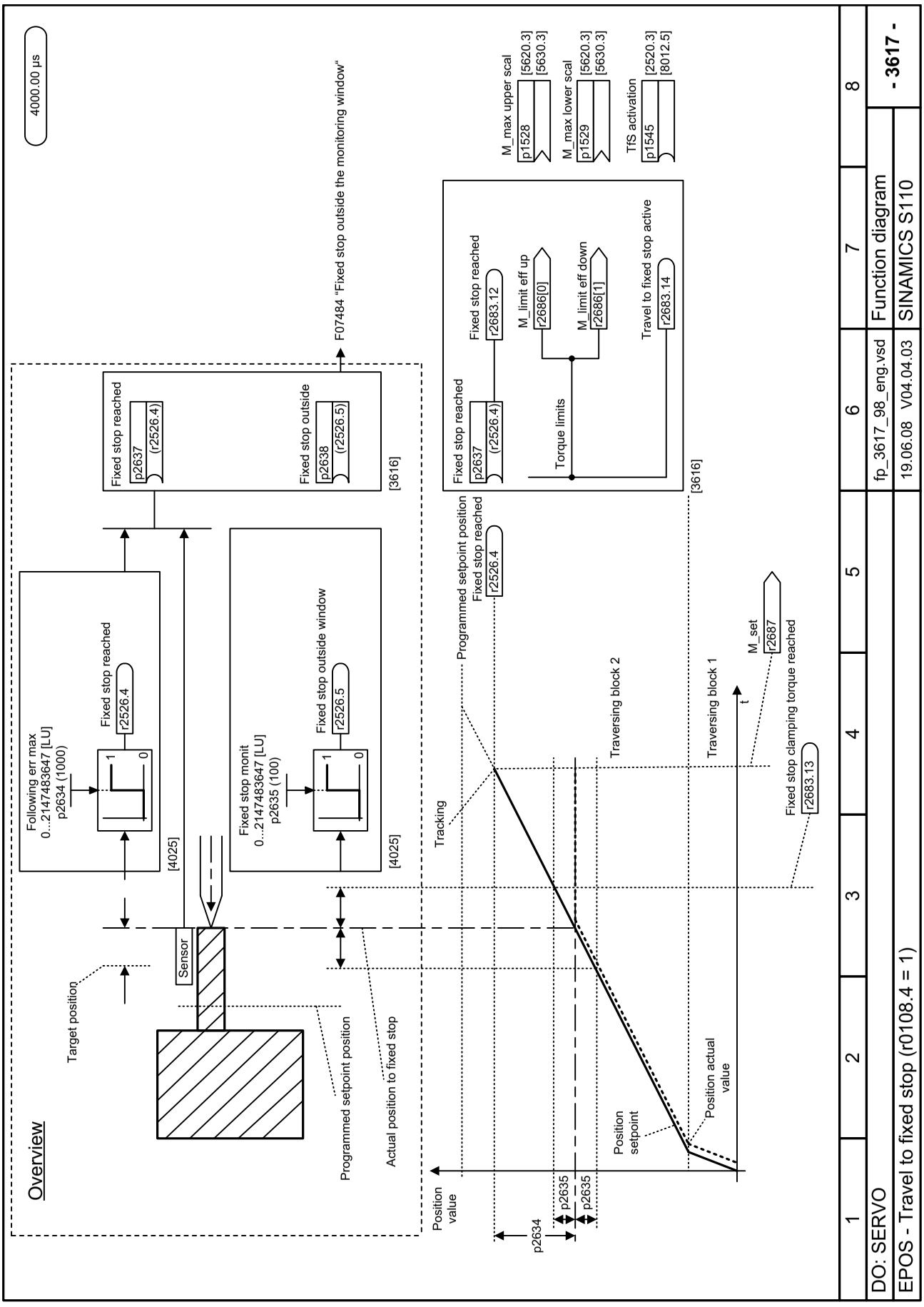

Fig. 3-106 3617 – Travel to fixed stop (r0108.4 = 1)

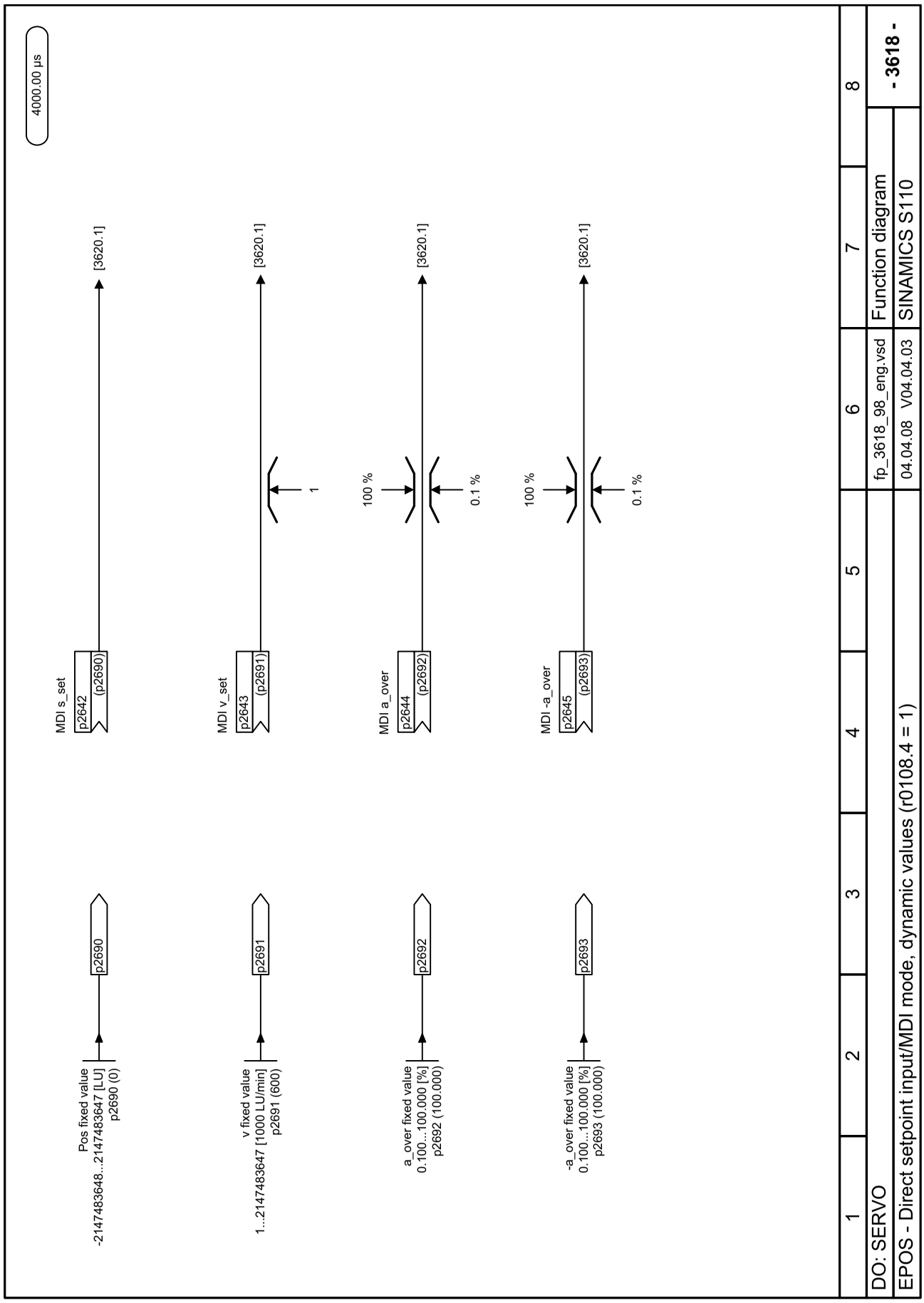

Fig. 3-107 3618 – Direct setpoint input/MDI mode, dynamic values (r0108.4 = 1)

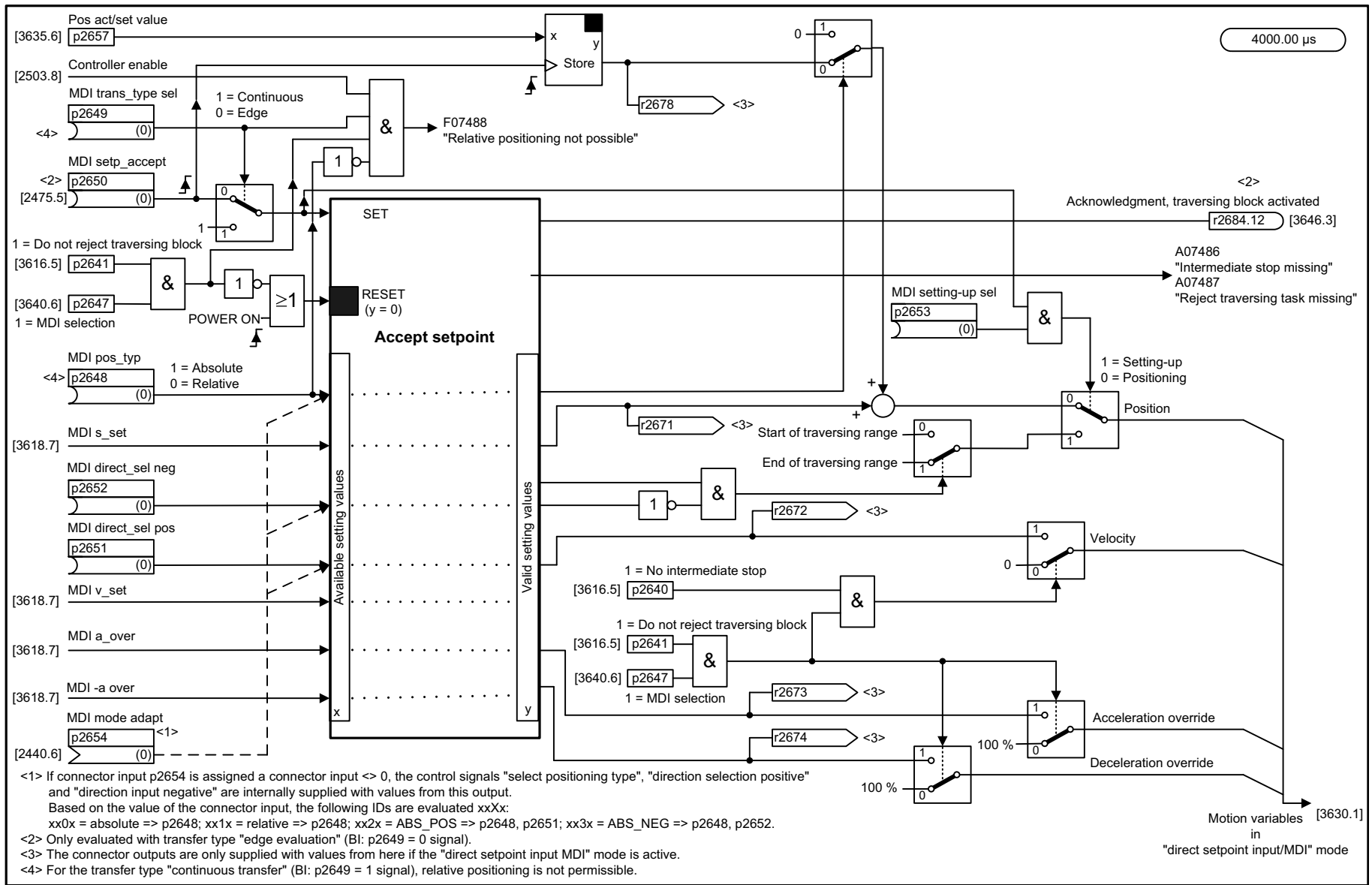

<1> If connector input p2654 is assigned a connector input <> 0, the control signals "select positioning type", "direction selection positive" and "direction input negative" are internally supplied with values from this output.
Based on the value of the connector input, the following IDs are evaluated xxXx:
xx0x = absolute => p2648; xx1x = relative => p2648; xx2x = ABS_POS => p2648, p2651; xx3x = ABS_NEG => p2648, p2652.
<2> Only evaluated with transfer type "edge evaluation" (BI: p2649 = 0 signal).
<3> The connector outputs are only supplied with values from here if the "direct setpoint input MDI" mode is active.
<4> For the transfer type "continuous transfer" (BI: p2649 = 1 signal), relative positioning is not permissible.

1	2	3	4	5	6	7	8
DO: SERVO					fp_3620_98_eng.vsd	Function diagram	- 3620 -
EPOS - Direct setpoint input/MDI mode (r0108.4 = 1)					04.04.08 V04.04.03	SINAMICS S110	

Fig. 3-108 3620 – Direct setpoint input/MDI mode (r0108.4 = 1)

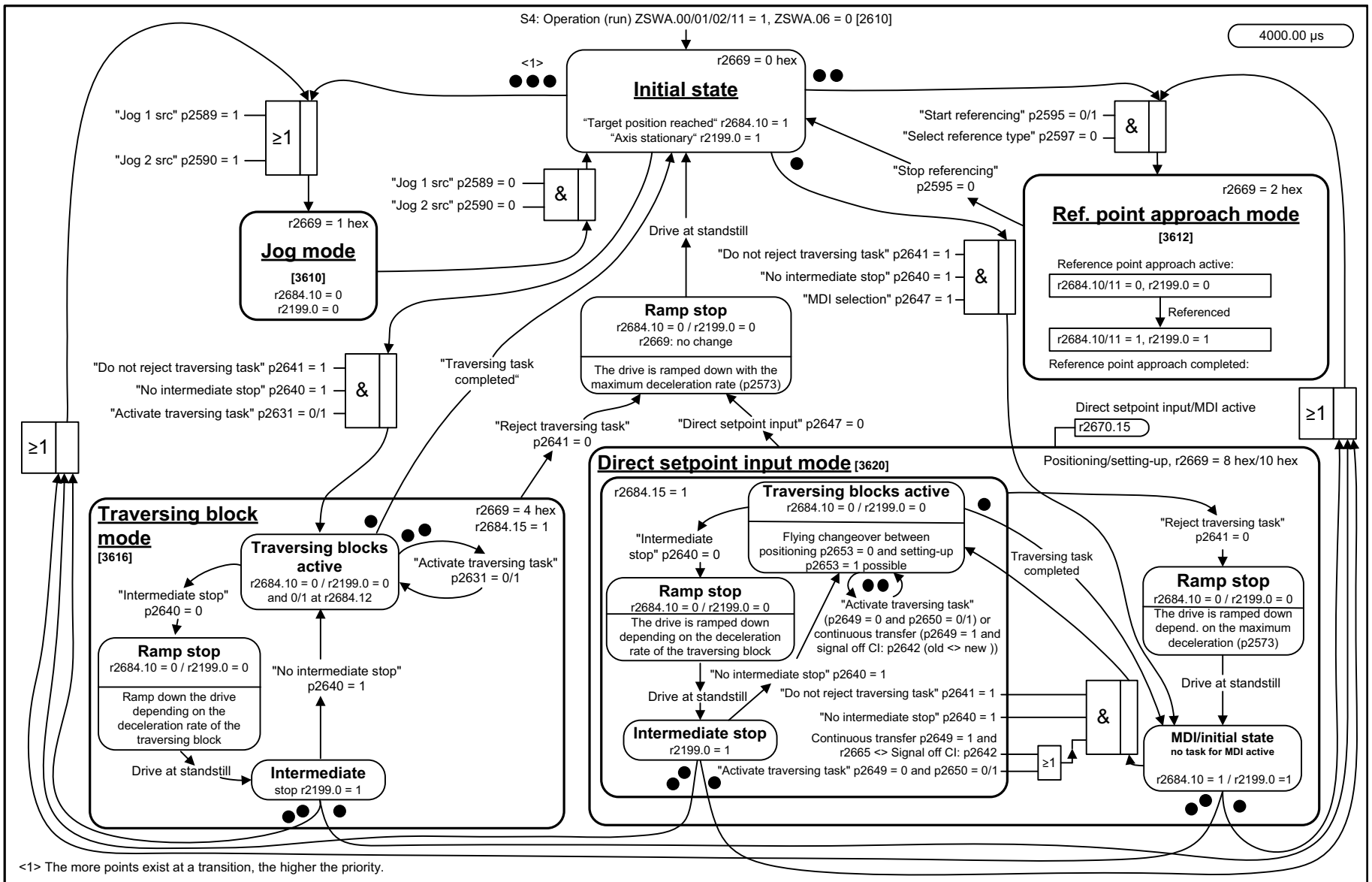

<1> The more points exist at a transition, the higher the priority.

1	2	3	4	5	6	7	8
DO: SERVO					fp_3625_98_eng.vsd	Function diagram	- 3625 -
EPOS - Mode control (r0108.4 = 1)					04.04.08 V04.04.03	SINAMICS S110	

Fig. 3-109 3625 – Mode control (r0108.4 = 1)

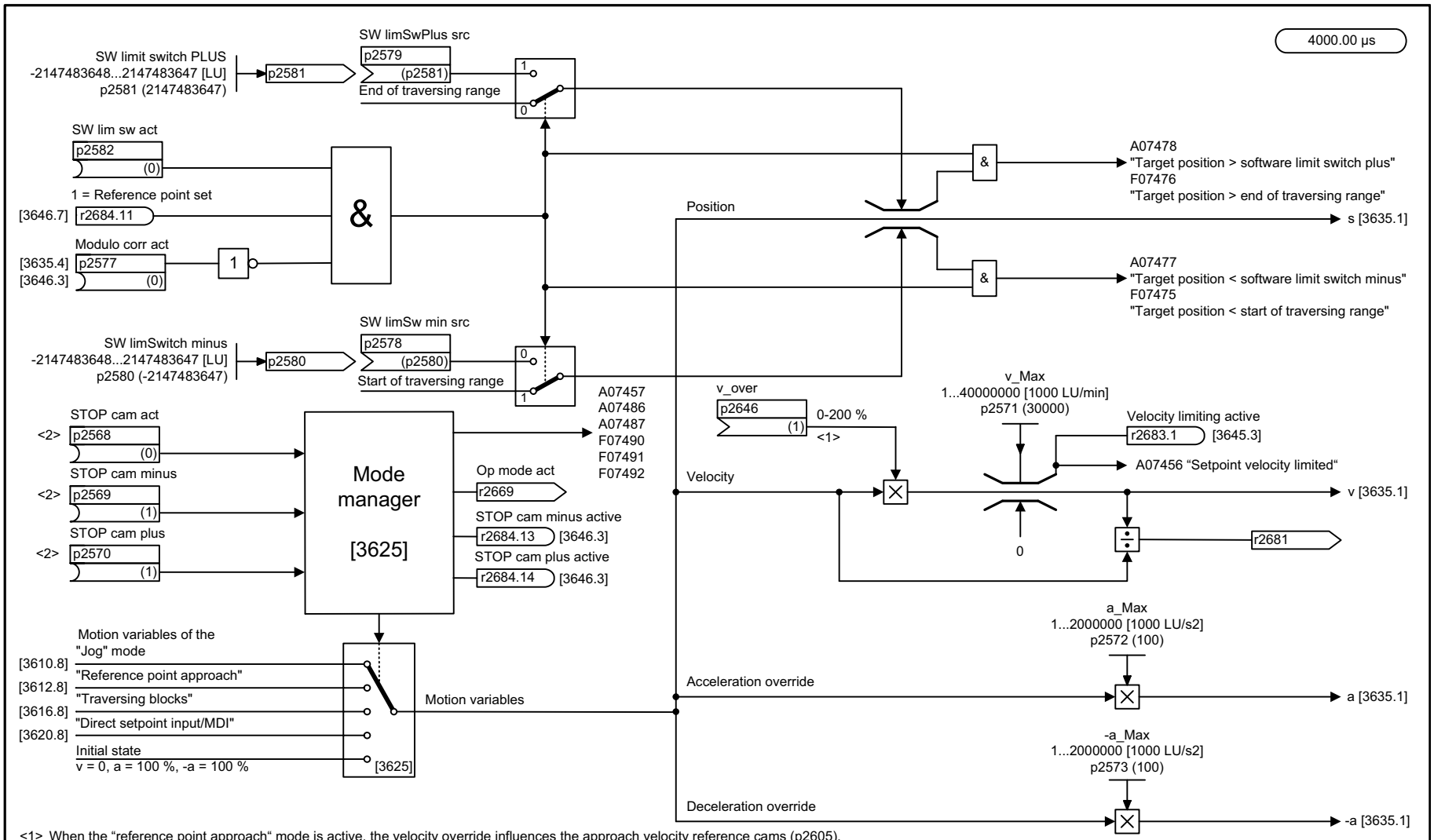

<1> When the “reference point approach“ mode is active, the velocity override influences the approach velocity reference cams (p2605). However, the approach velocity reference zero mark (p2608) and the approach velocity reference point (p2611) are not influenced.
<2> The STOP cams are low active.
When a cam responds, the drive brakes with maximum deceleration along the ramp. After the fault has been acknowledged, only movements away from the STOP cam are permitted.

1	2	3	4	5	6	7	8
DO: SERVO					fp_3630_98_eng.vsd	Function diagram	- 3630 -
EPOS - Traversing range limits (r0108.4 = 1)					04.04.08 V04.04.03	SINAMICS S110	

Fig. 3-110 3630 – Traversing range limits (r0108.4 = 1)

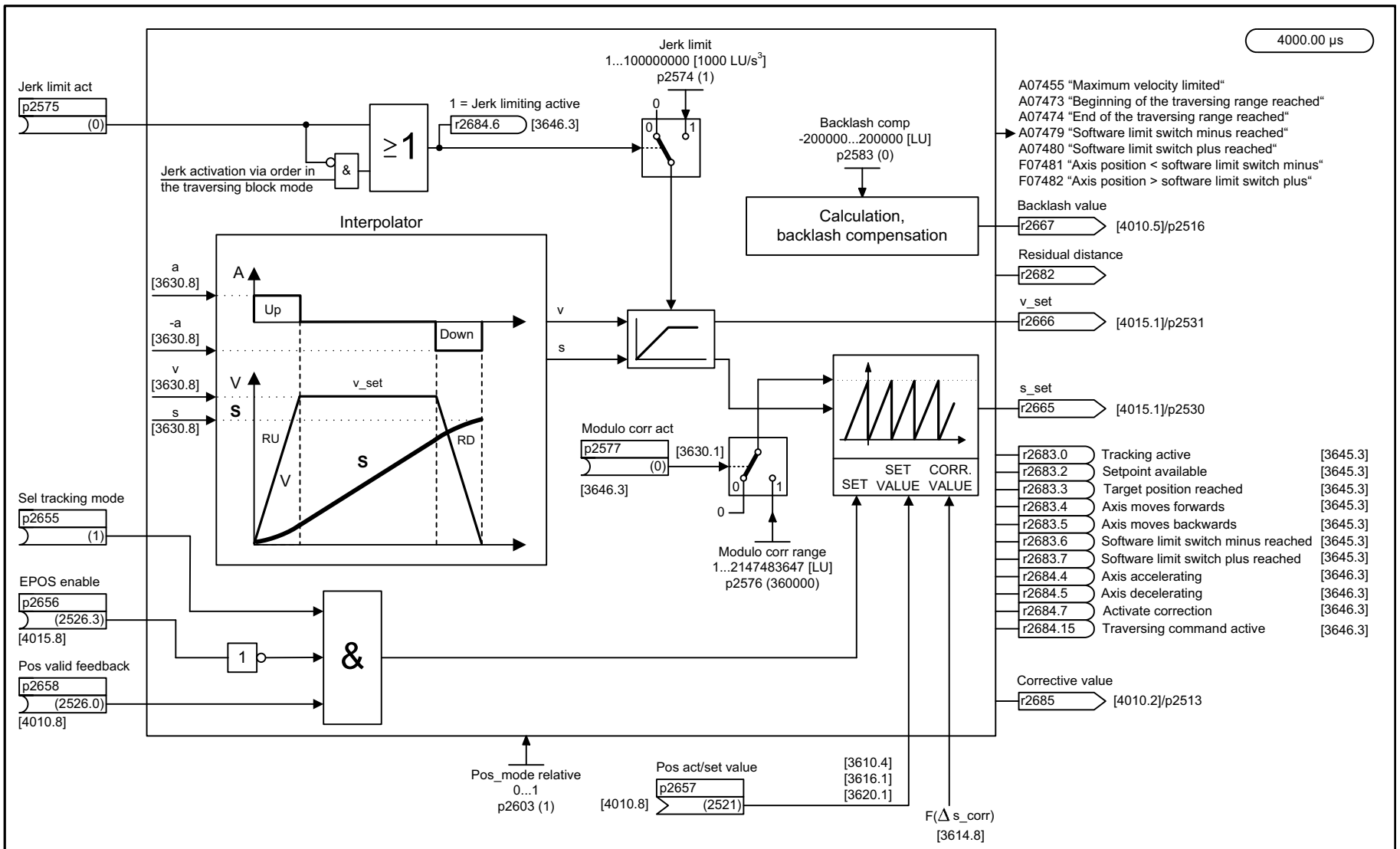

1	2	3	4	5	6	7	8
DO: SERVO					fp_3635_98_eng.vsd	Function diagram	- 3635 -
EPOS - Interpolator (r0108.4 = 1)					27.11.08 V04.04.03	SINAMICS S110	

Fig. 3-111 3635 – Interpolator (r0108.4 = 1)

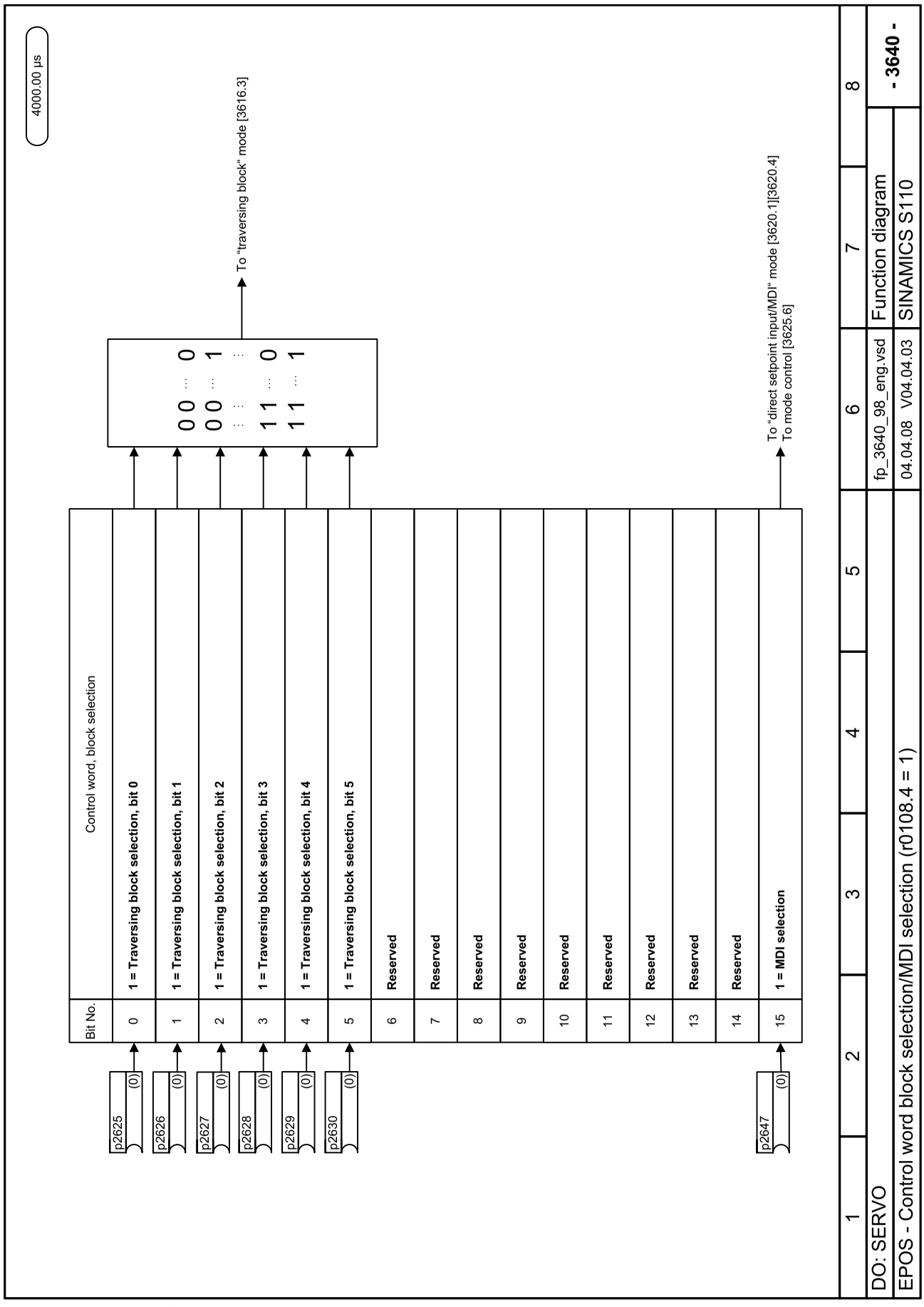

Fig. 3-112 3640 – Control word, block selection/MDI selection (r0108.4 = 1)

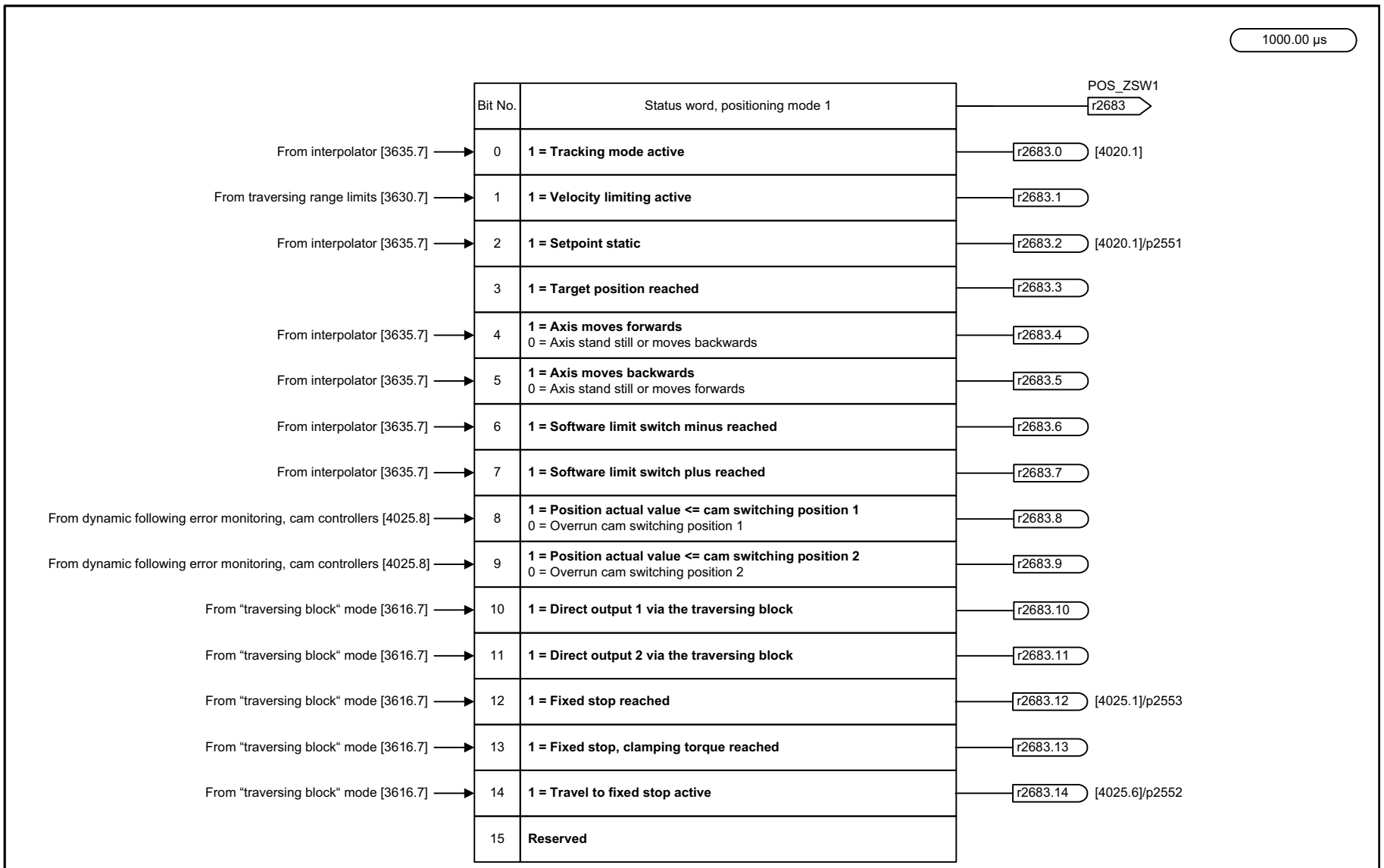

1	2	3	4	5	6	7	8
DO: SERVO					fp_3645_98_eng.vsd	Function diagram	- 3645 -
EPOS - Status word 1 (r0108.3 = 1, r0108.4 = 1)					27.11.08 V04.04.03	SINAMICS S110	

Fig. 3-113 3645 – Status word 1 (r0108.3 = 1, r0108.4 = 1)

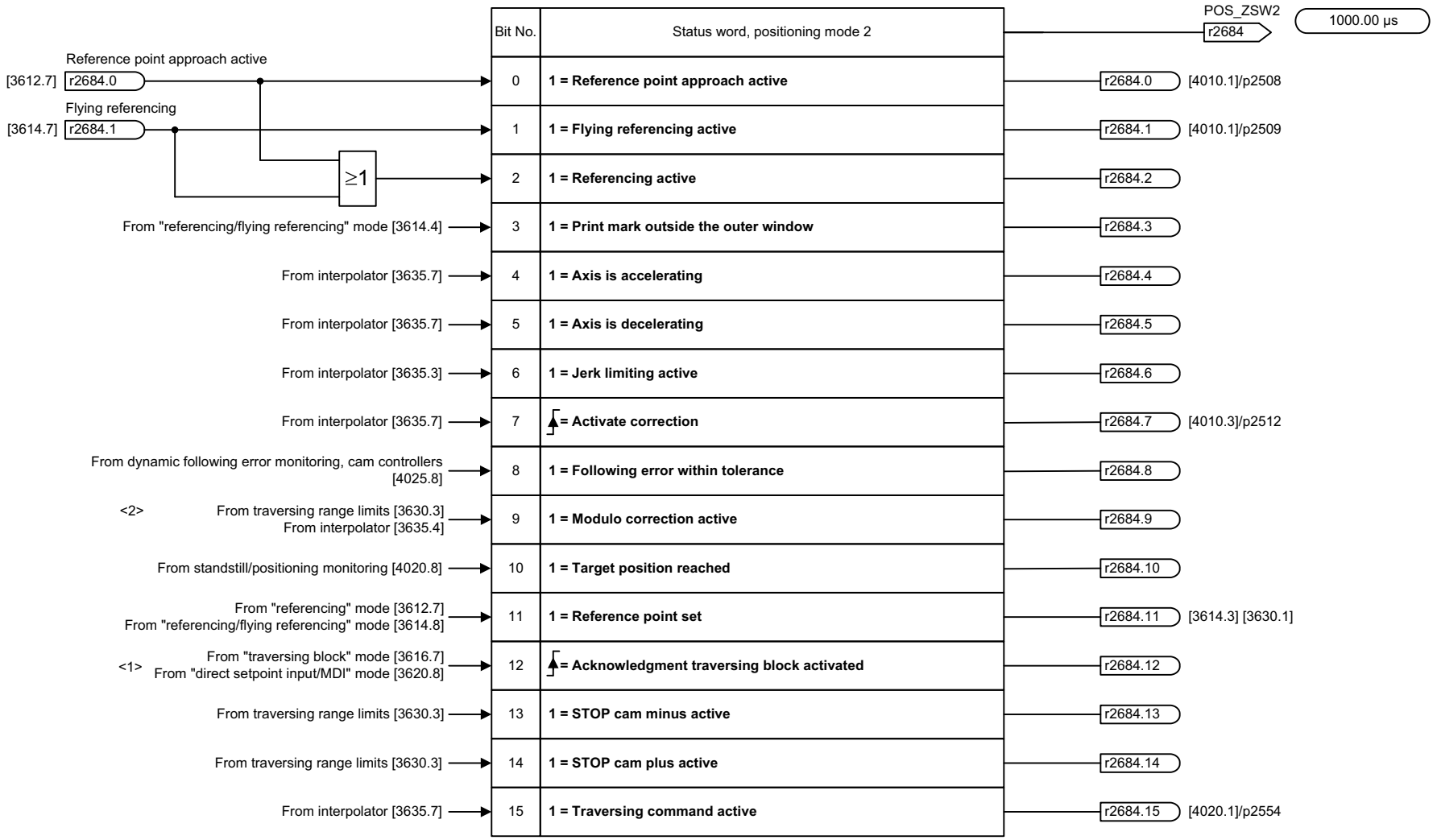

<1> By default, the status bit is supplied with values from the “traversing block“ mode.
However, if the “direct setpoint input/MDI“ mode is active, it is supplied with values from this mode.
<2> The signal is only effective when the drive has reached the "Ready" state.

1	2	3	4	5	6	7	8
DO: SERVO					fp_3646_98_eng.vsd	Function diagram	- 3646 -
EPOS - Status word 2 (r0108.3 = 1, r0108.4 = 1)					07.10.08 V04.04.03	SINAMICS S110	

Fig. 3-114 3646 – Status word 2 (r0108.3 = 1, r0108.4 = 1)

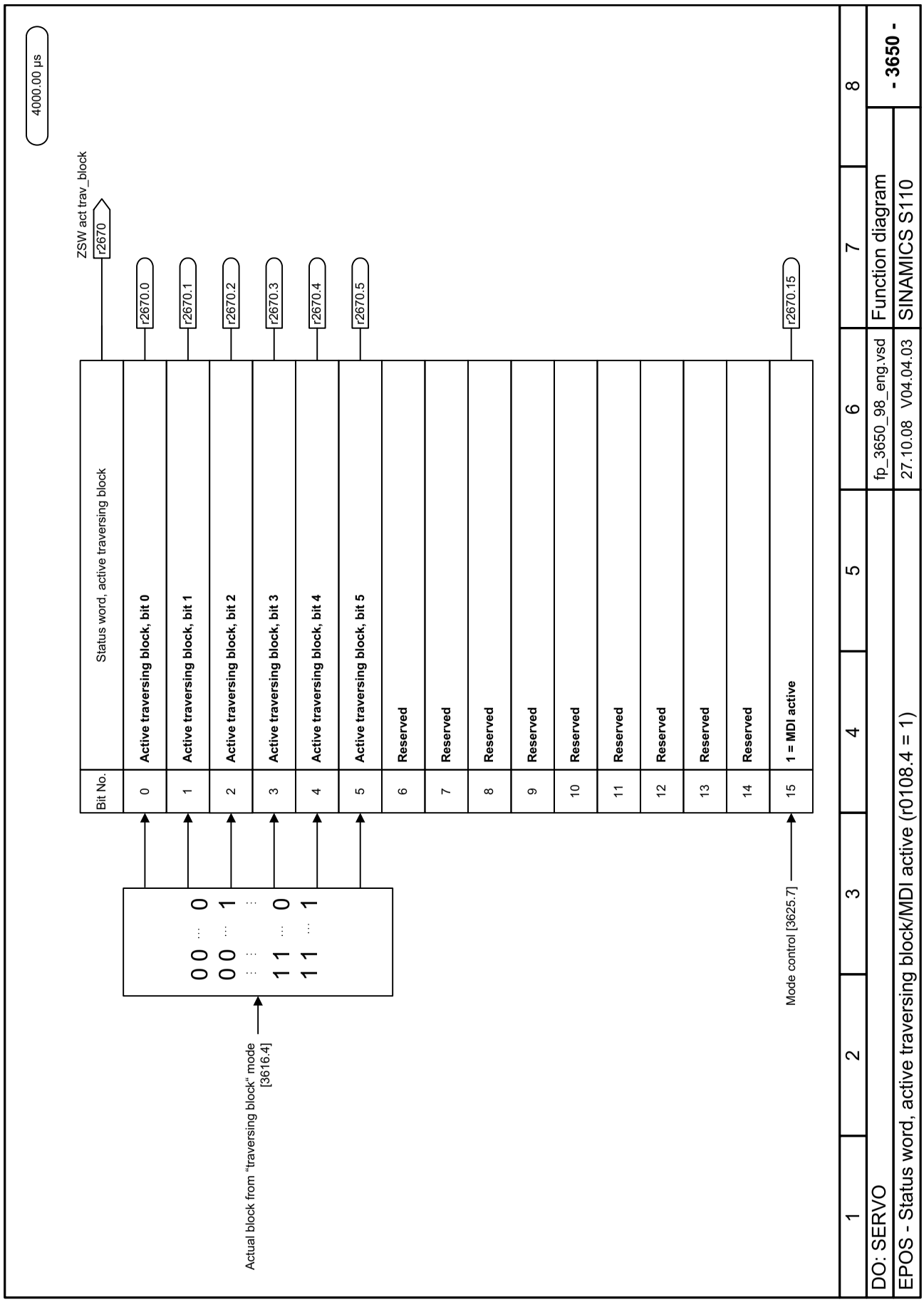

Fig. 3-115 3650 – Status word, active traversing block/MDI active (r0108.4 = 1)

3.13 Position control

Function block diagrams

4010 – Position actual value preprocessing (r0108.3 = 1)	845
4015 – Position controller (r0108.3 = 1)	846
4020 – Standstill/positioning monitoring (r0108.3 = 1)	847
4025 – Dynamic following error monitoring, cam controllers (r0108.3 = 1)	848

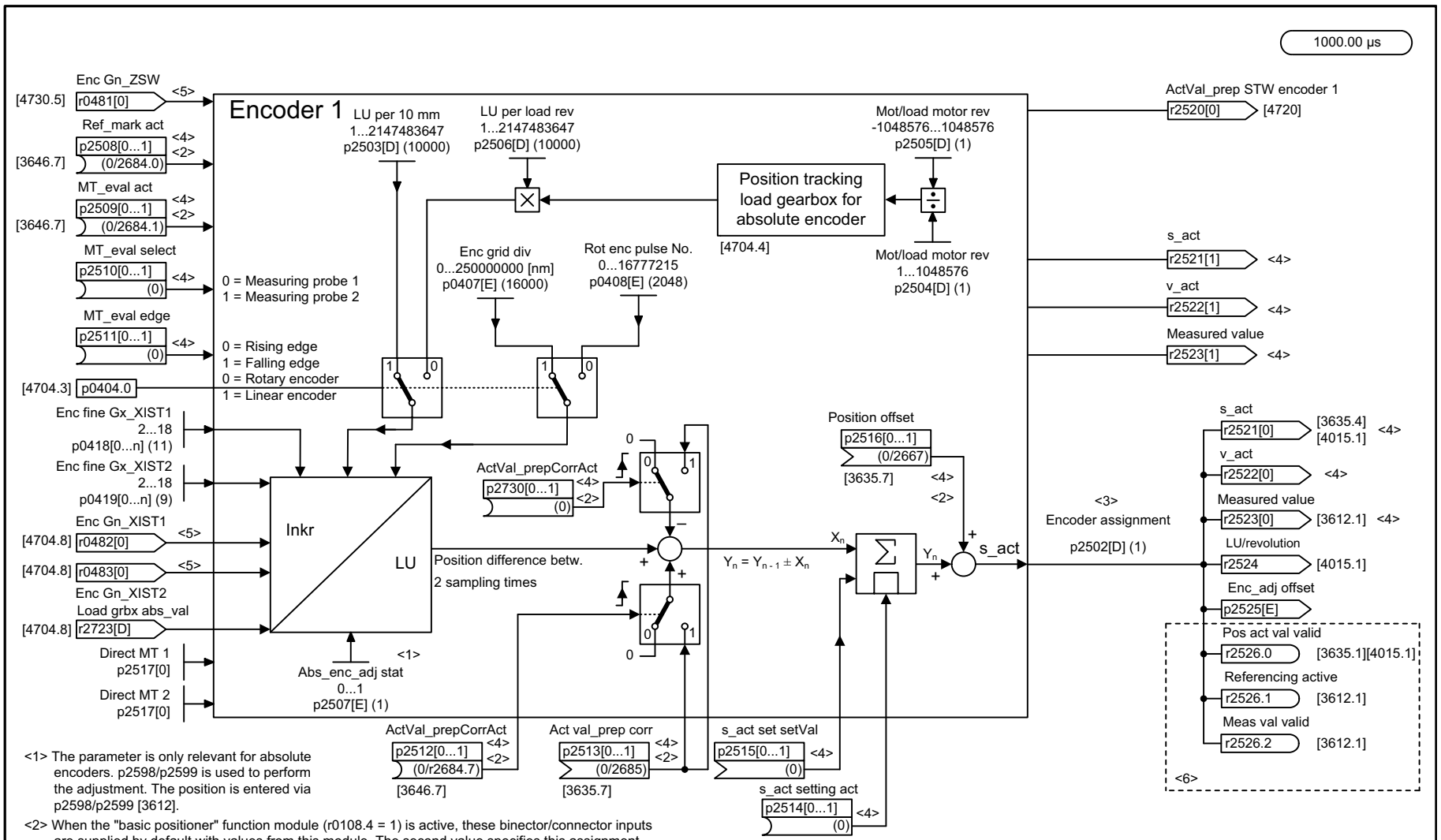

<1> The parameter is only relevant for absolute encoders. p2598/p2599 is used to perform the adjustment. The position is entered via p2598/p2599 [3612].

<2> When the "basic positioner" function module (r0108.4 = 1) is active, these binector/connector inputs are supplied by default with values from this module. The second value specifies this assignment.

<3> p2502 = 0: Position actual value preprocessing is not assigned to any encoder.

<4> [0] for position control; [1] for encoder 1.

<5> Index [0] → encoder 1.

NOTE: SINAMICS S110 supports only one encoder. This encoder must be parameterized as encoder 1.

1	2	3	4	5	6	7	8
DO: SERVO					fp_4010_98_eng.vsd	Function diagram	- 4010 -
Position control - Position actual value preprocessing (r0108.3 = 1)					09.11.09 V04.04.03	SINAMICS S110	

Fig. 3-116 4010 – Position actual value preprocessing (r0108.3 = 1)

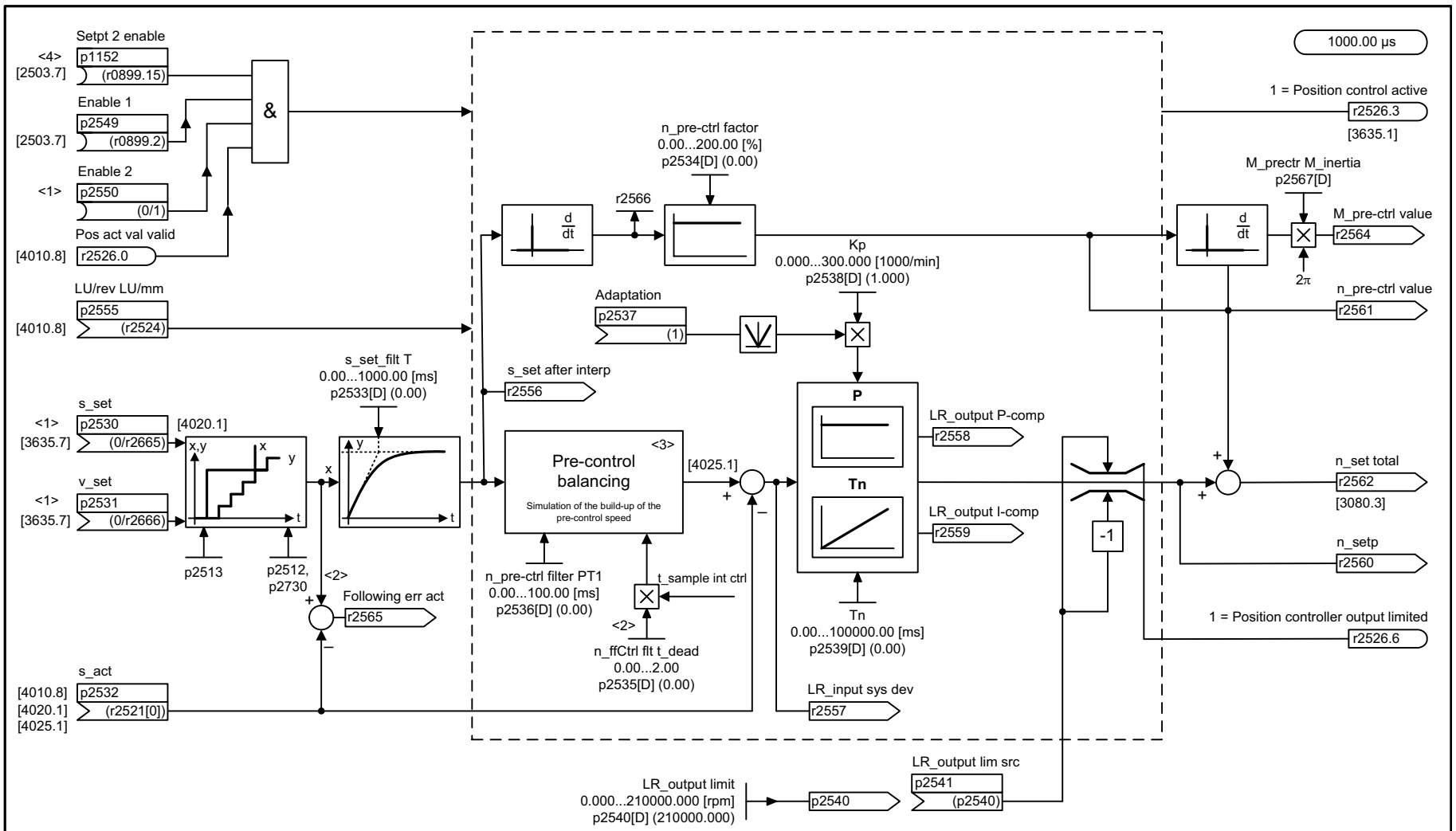

<1> When the "basic positioner" function module (r0108.4 = 1) is active, these binector/connector inputs are supplied by default with values from this module. The second value specifies this assignment.
<2> For p2534 > 0 % the following applies: A deadtime of two position controller clock cycles is additionally effective.
<3> For p2534 = 0 % the following applies: Pre-control balancing is not effective.
<4> Only if the “extended brake control“ function module is active (r0108.14 = 1).

1	2	3	4	5	6	7	8
DO: SERVO					fp_4015_98_eng.vsd	Function diagram	- 4015 -
Position control - Position controller (r0108.3 = 1)					30.09.11 V04.04.03	SINAMICS S110	

Fig. 3-117 4015 – Position controller (r0108.3 = 1)

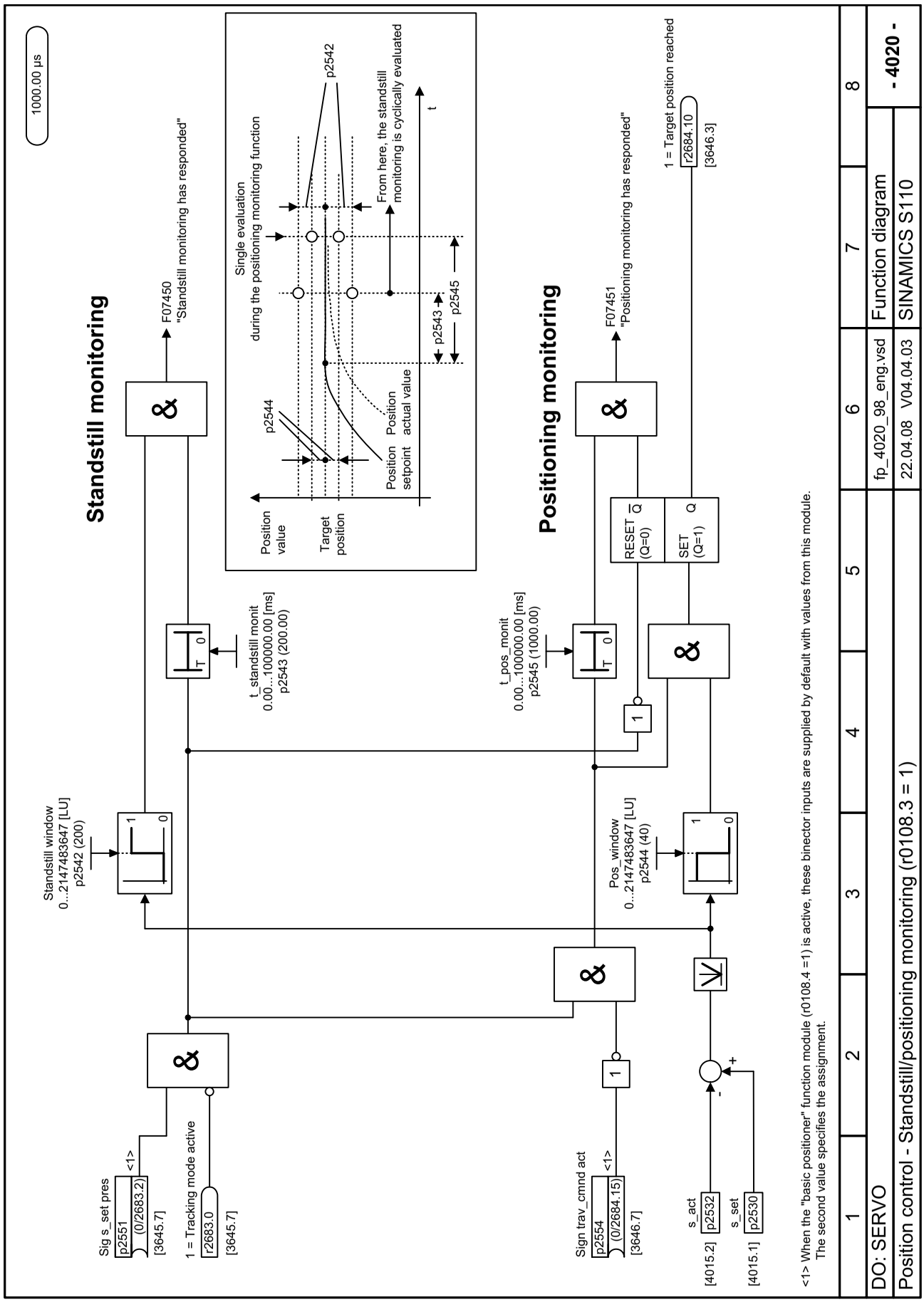

Fig. 3-118 4020 – Standstill/positioning monitoring (r0108.3 = 1)

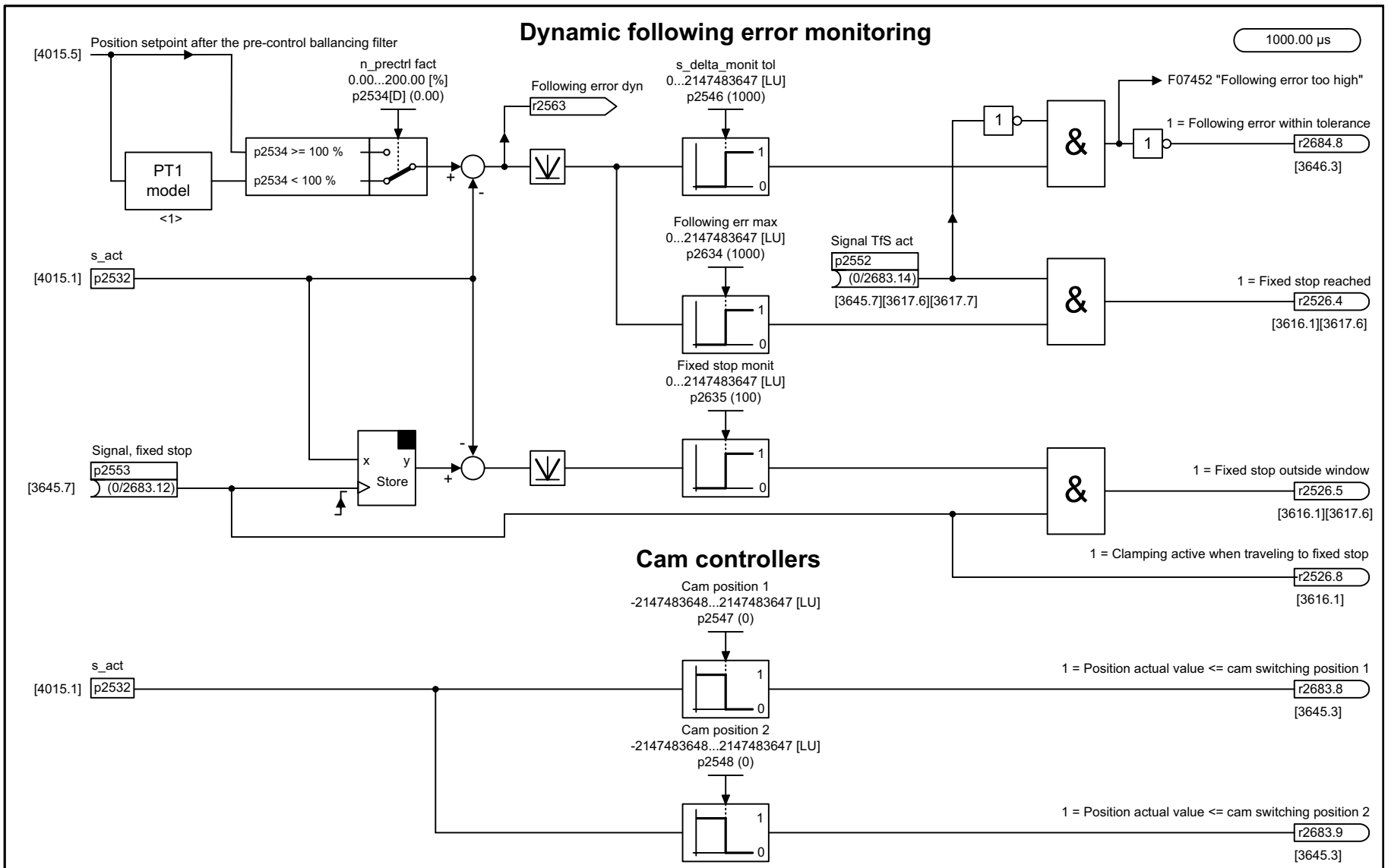

1	2	3	4	5	6	7	8
DO: SERVO					fp_4025_98_eng.vsd	Function diagram	- 4025 -
Position control - Dynamic following error monitoring, cam controllers (r0108.3 = 1)					22.04.08 V04.04.03	SINAMICS S110	

Fig. 3-119 4025 – Dynamic following error monitoring, cam controllers (r0108.3 = 1)

3.14 Encoder evaluation

Function block diagrams

4704 – Position and temperature sensing, encoders 1 ... 2	850
4710 – Speed actual value and pole pos. sensing, motor encoder (encoder 1)	851
4720 – Encoder interface, receive signals, encoders 1 ... 2	852
4730 – Encoder interface, send signals, encoders 1 ... 2	853
4735 – Reference mark search with external zero mark, encoder 1	854
4740 – Measuring probe evaluation, measured value memory, encoders 1 ... 2	855

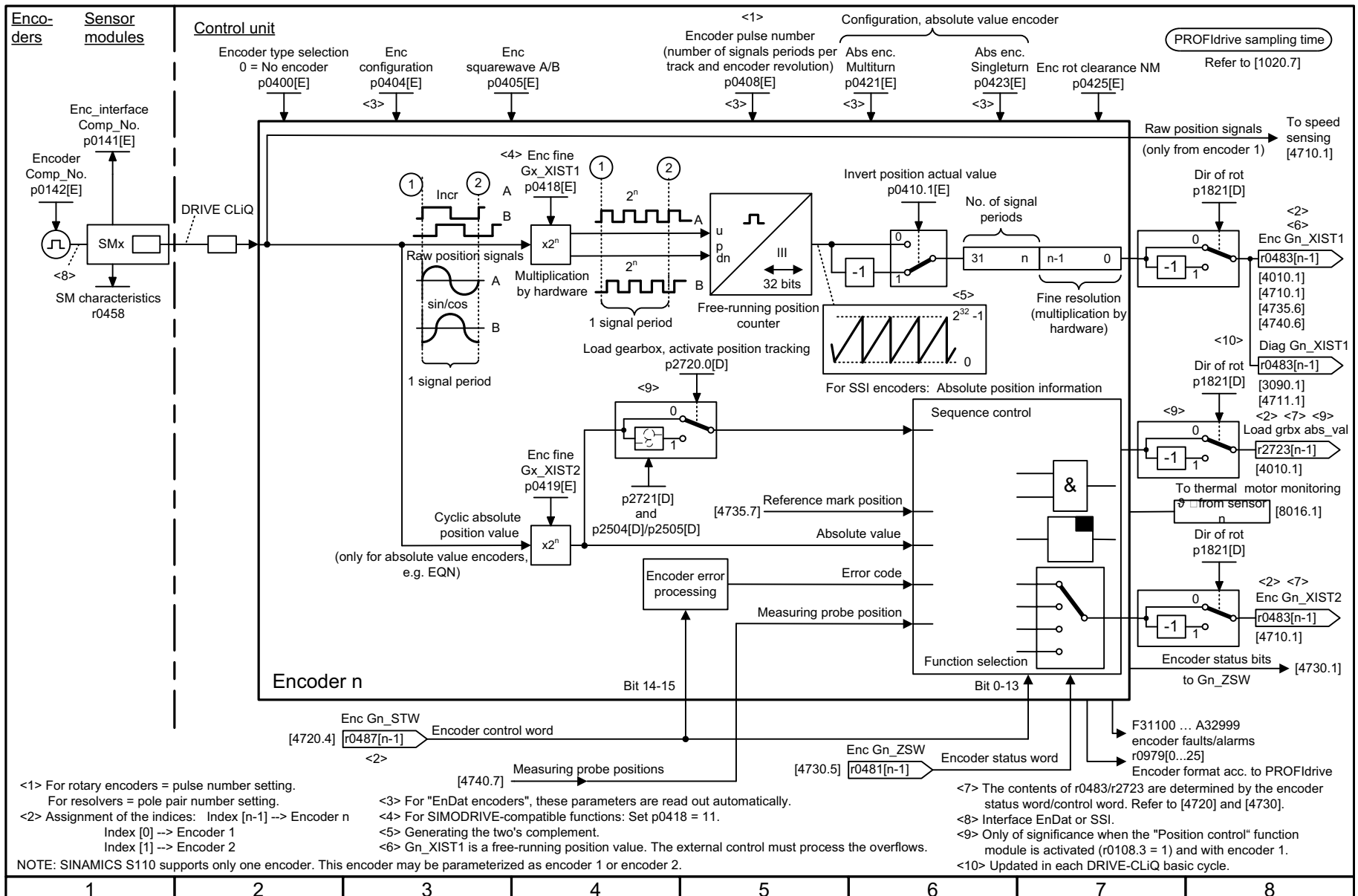

<1> For rotary encoders = pulse number setting.
For resolvers = pole pair number setting.
<2> Assignment of the indices: Index [n-1] --> Encoder n
Index [0] --> Encoder 1
Index [1] --> Encoder 2
<3> For "EnDat encoders", these parameters are read out automatically.
<4> For SIMODRIVE-compatible functions: Set p0418 = 11.
<5> Generating the two's complement.
<6> Gn_XIST1 is a free-running position value. The external control must process the overflows.
<7> The contents of r0483/r2723 are determined by the encoder status word/control word. Refer to [4720] and [4730].
<8> Interface EnDat or SSI.
<9> Only of significance when the "Position control" function module is activated (r0108.3 = 1) and with encoder 1.
<10> Updated in each DRIVE-CLiQ basic cycle.
NOTE: SINAMICS S110 supports only one encoder. This encoder may be parameterized as encoder 1 or encoder 2.

1	2	3	4	5	6	7	8
DO: SERVO					fp_4704_98_eng.vsd	Function diagram	- 4704 -
Encoder evaluation - Position and speed sensing, encoders 1 … 2					03.07.08 V04.04.03	SINAMICS S110	

Fig. 3-120 4704 – Position and temperature sensing, encoders 1 ... 2

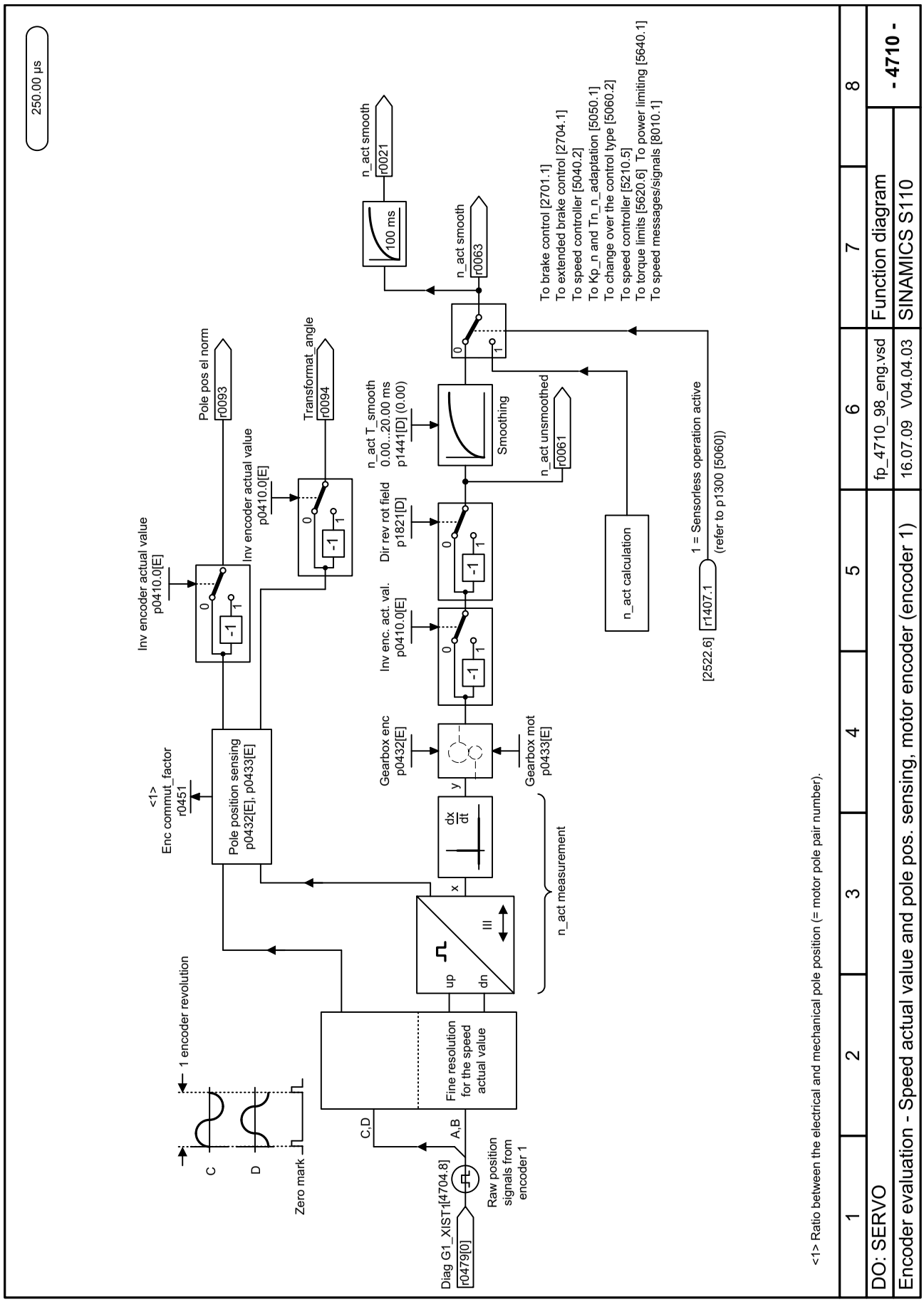

Fig. 3-121 4710 – Speed actual value and pole pos. sensing, motor encoder (encoder 1)

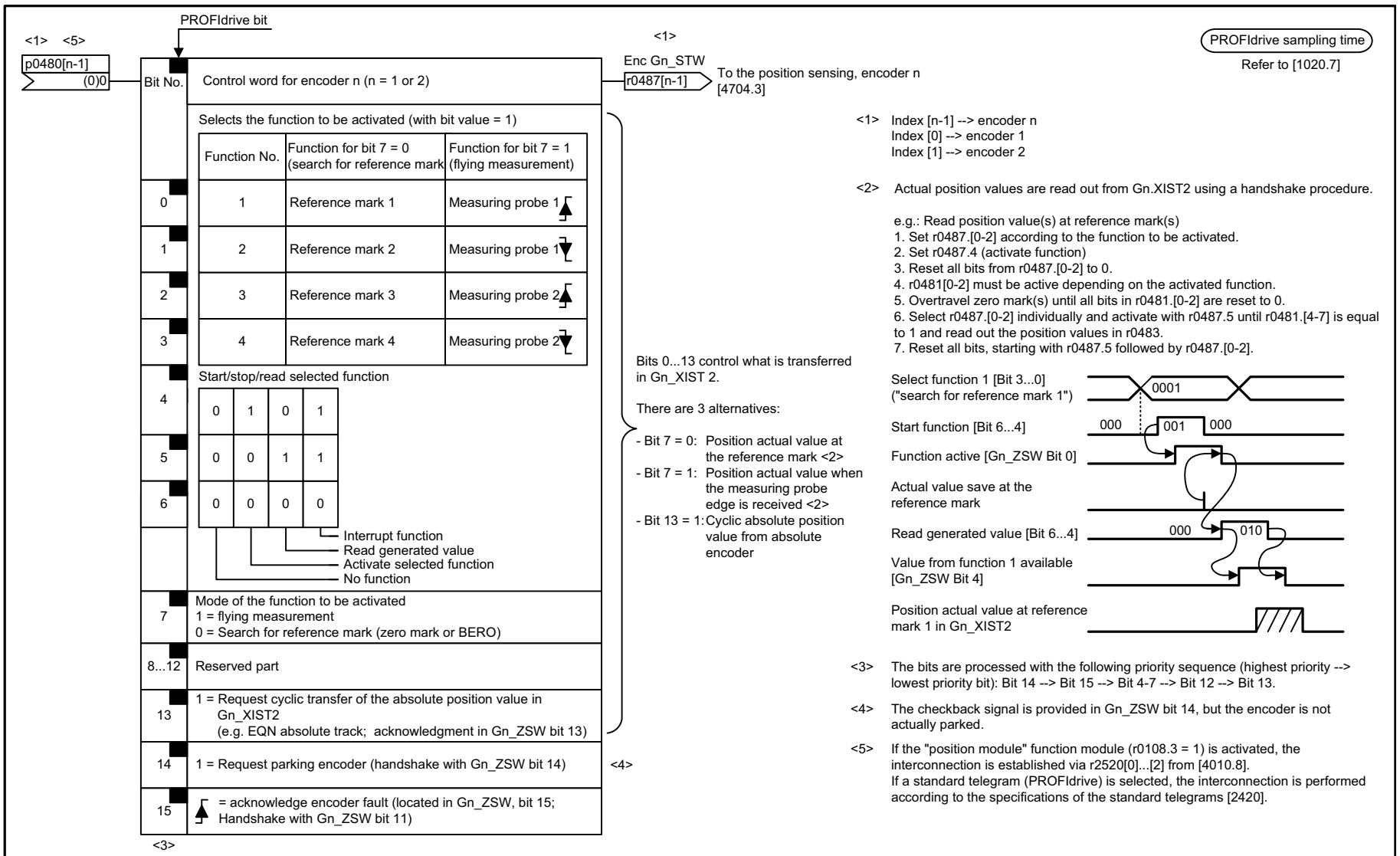

NOTE: SINAMICS S110 supports only one encoder. This encoder may be parameterized as encoder 1 or encoder 2.

1	2	3	4	5	6	7	8
DO: SERVO					fp_4720_98_eng.vsd	Function diagram	- 4720 -
Encoder evaluation - Encoder interface, receive signals, encoders 1 ... 2					16.07.09 V04.04.03	SINAMICS S110	

Fig. 3-122 4720 – Encoder interface, receive signals, encoders 1 ... 2

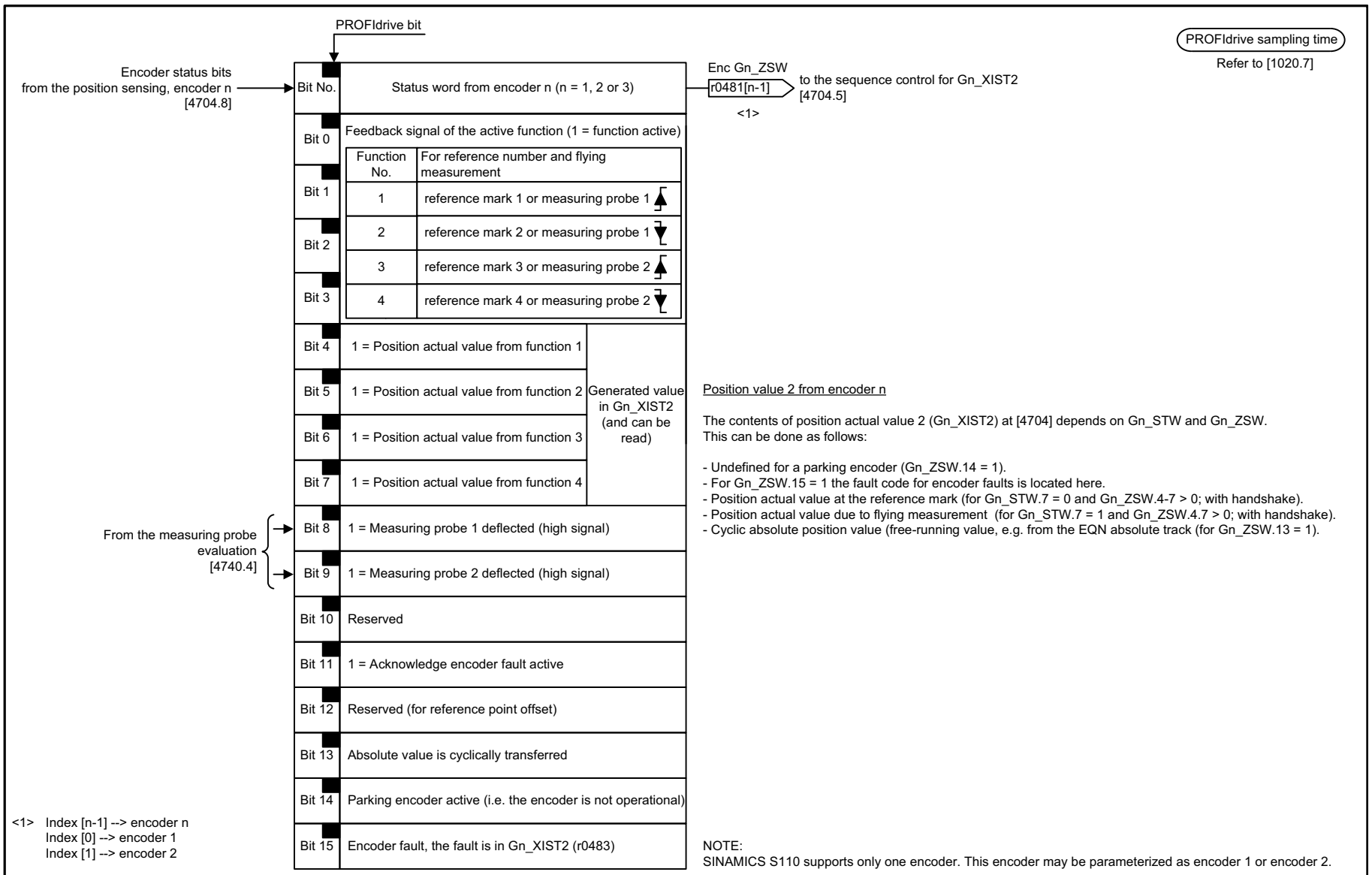

1	2	3	4	5	6	7	8
DO: SERVO					fp_4730_98_eng.vsd	Function diagram	- 4730 -
Encoder evaluation - Encoder interface, send signals, encoders 1 ... 2					03.03.08 V04.04.03	SINAMICS S110	

Fig. 3-123 4730 – Encoder interface, send signals, encoders 1 ... 2

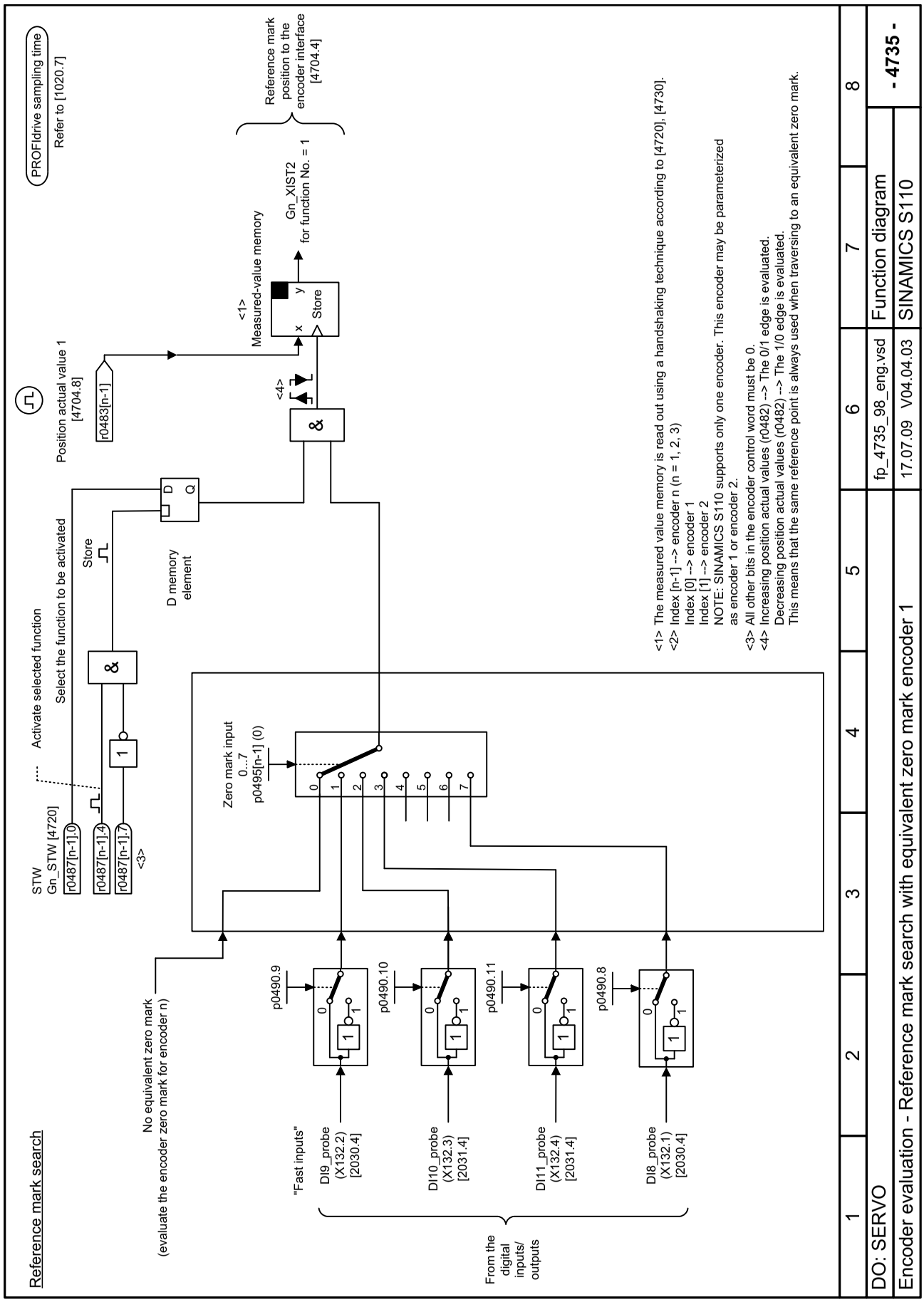

Fig. 3-124 4735 – Reference mark search with external zero mark, encoder 1

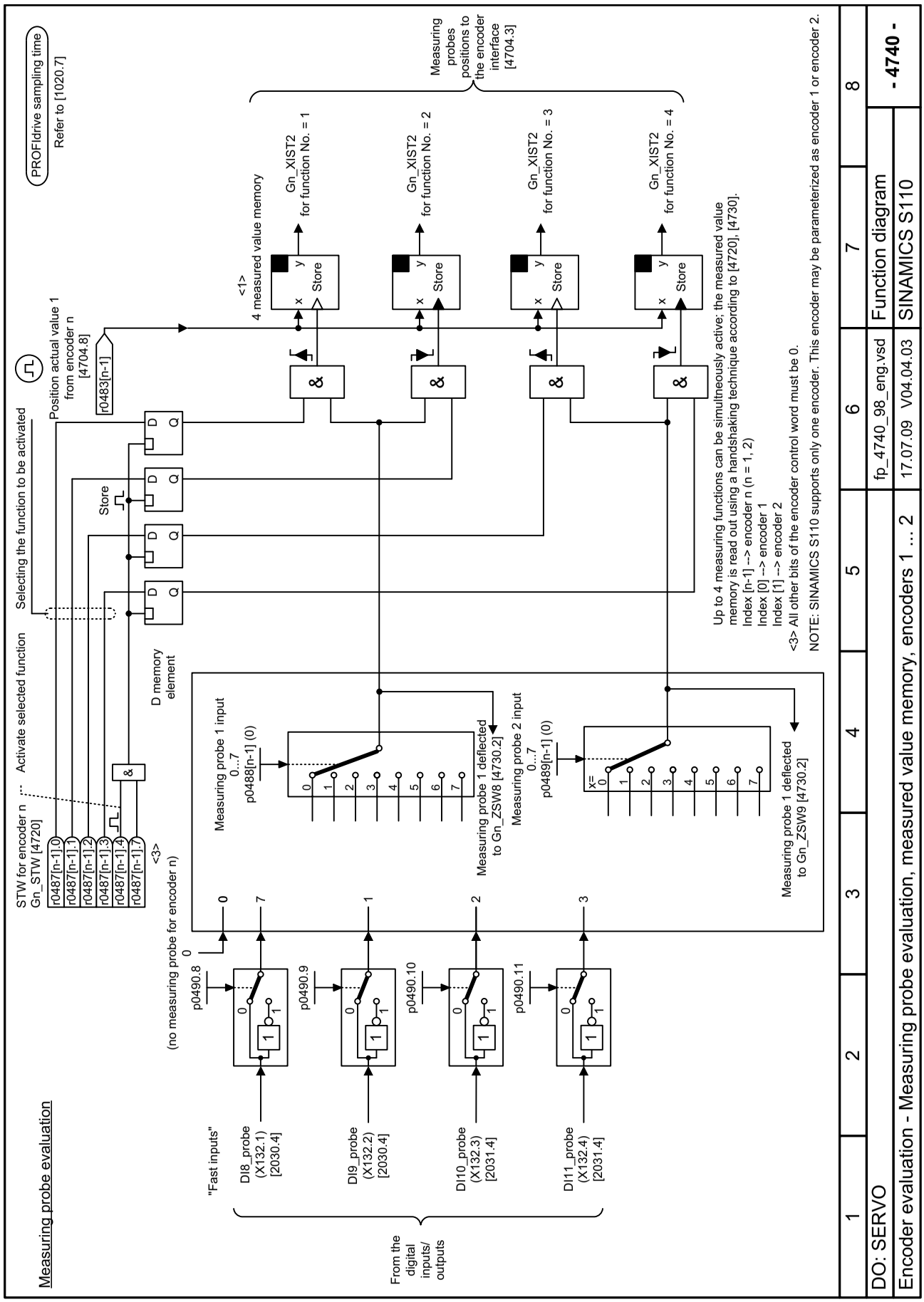

Fig. 3-125 4740 – Measuring probe evaluation, measured value memory, encoders 1 ... 2

3.15 Servo control

Function block diagrams

5020 – Speed setpoint filter and speed pre-control	857
5030 – Reference model/pre-control balancing/speed limitation	858
5040 – Speed controller with encoder	859
5042 – Speed controller, torque/speed pre-control with encoder (p1402.4 = 1)	860
5050 – Speed controller adaptation (Kp_n/Tn_n adaptation)	861
5060 – Torque setpoint, control type changeover	862
5210 – Speed controller without encoder	863
5300 – U/f control	864
5301 – Signaling function variable	865
5490 – Speed control configuration	866
5610 – Torque limiting/reduction/interpolator	867
5620 – Motoring/generating torque limit	868
5630 – Upper/lower torque limit	869
5640 – Mode changeover, power/current limiting	870
5650 – Vdc_max controller and Vdc_min controller	871
5710 – Current setpoint filter	872
5714 – Iq and Id controllers	873
5722 – Field current/flux input, flux reduction, flux controller	874
5730 – Interface to the Power Module (gating signals, current actual values)	875

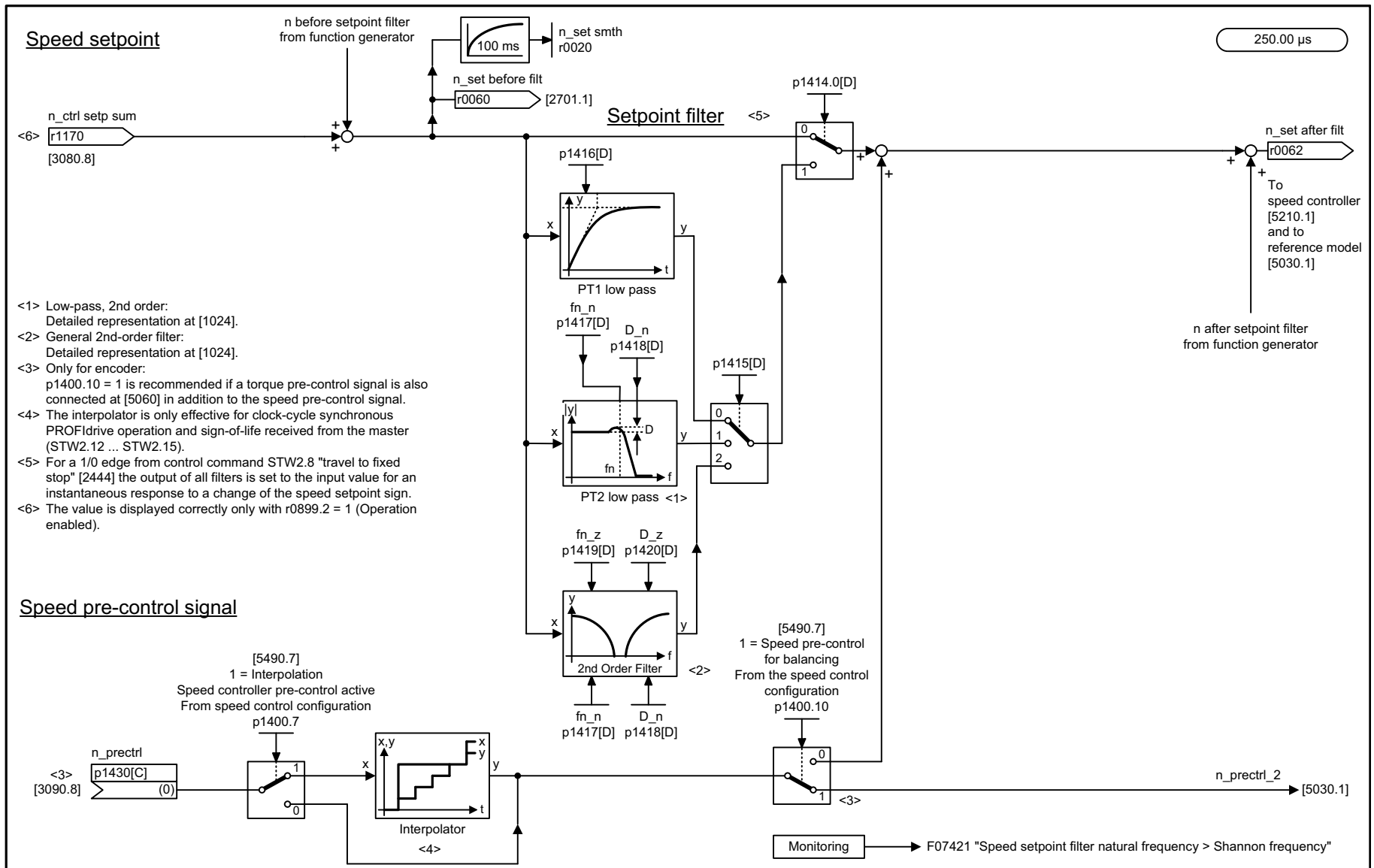

1	2	3	4	5	6	7	8
DO: SERVO					fp_5020_98_eng.vsd	Function diagram	- 5020 -
Servo control - Speed setpoint filter and speed pre-control					26.07.10 V04.04.03	SINAMICS S110	

Fig. 3-126 5020 – Speed setpoint filter and speed pre-control

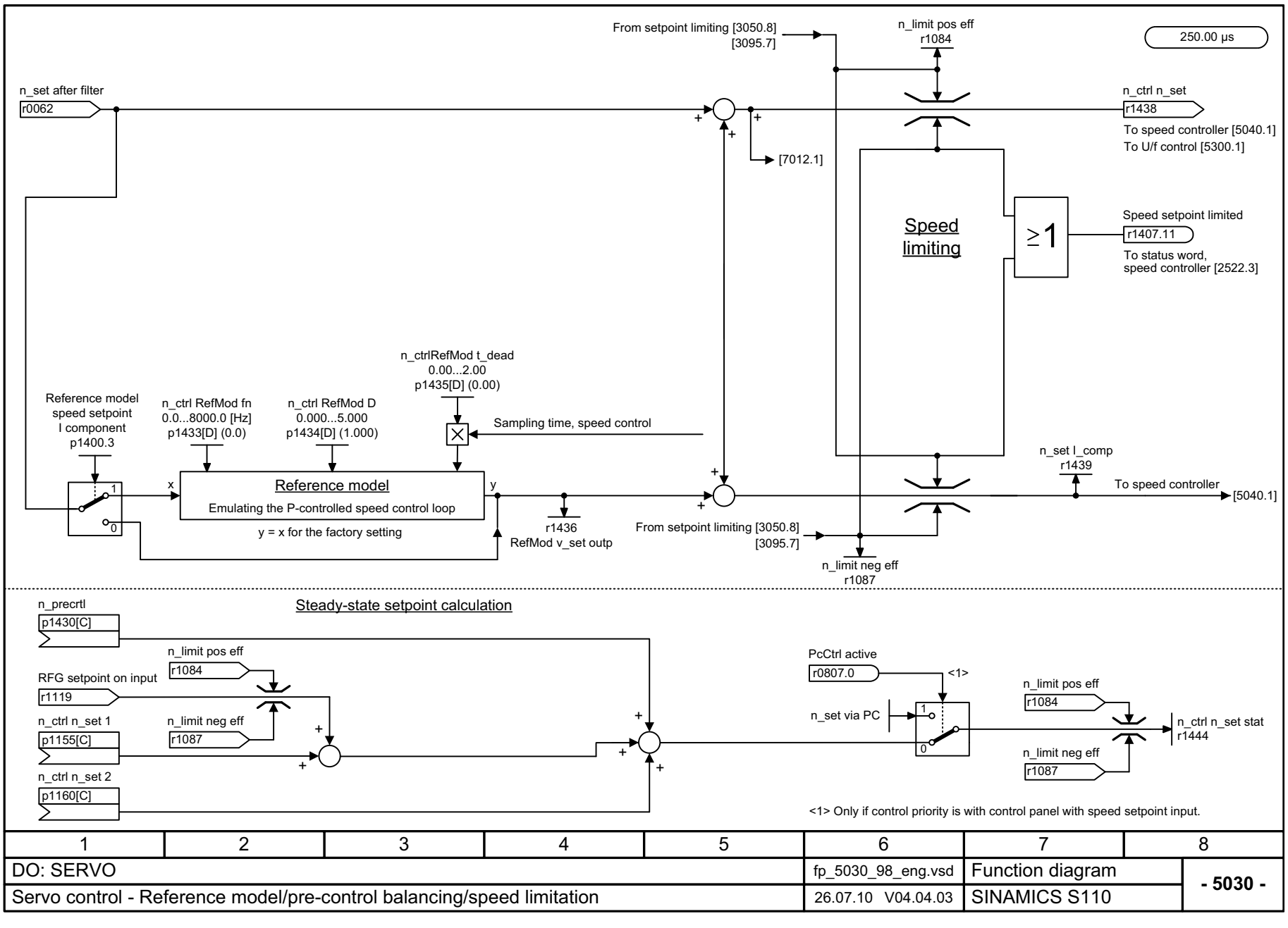

1	2	3	4	5	6	7	8
DO: SERVO					fp_5030_98_eng.vsd	Function diagram	- 5030 -
Servo control - Reference model/pre-control balancing/speed limitation					26.07.10 V04.04.03	SINAMICS S110	

Fig. 3-127 5030 – Reference model/pre-control balancing/speed limitation

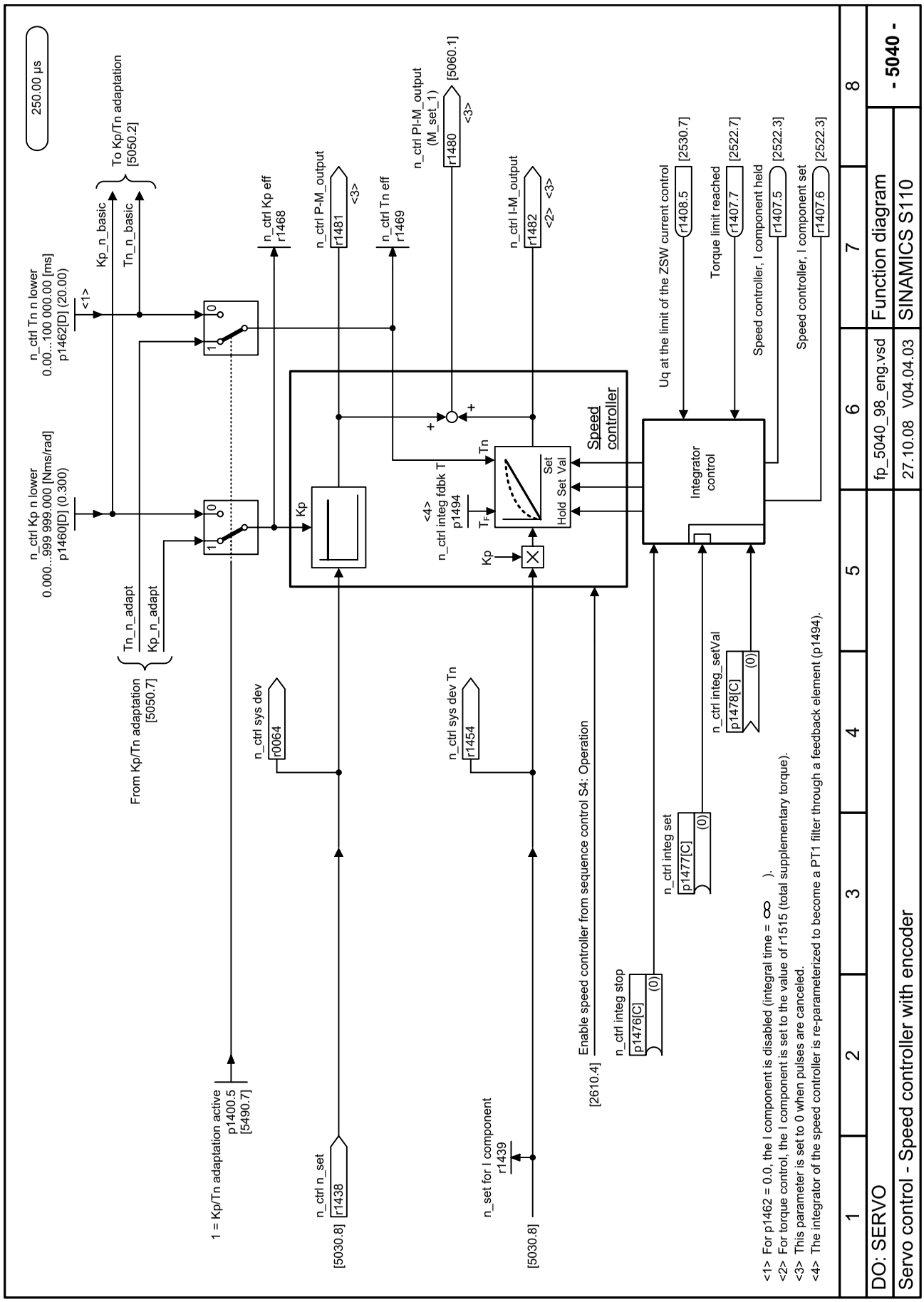

Fig. 3-128 5040 – Speed controller with encoder

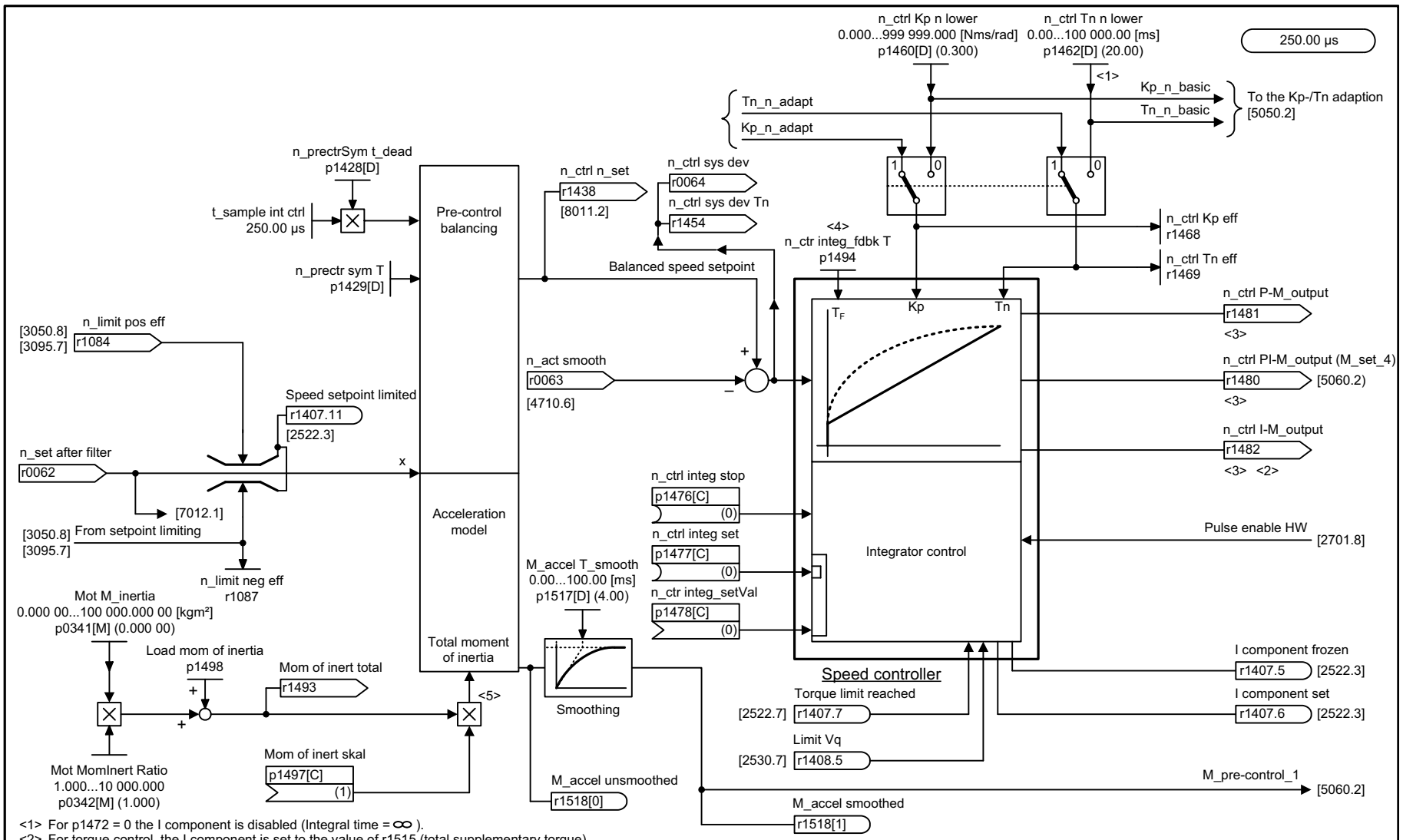

<1> For p1472 = 0 the I component is disabled (Integral time = ∞).
<2> For torque control, the I component is set to the value of r1515 (total supplementary torque).
<3> This parameter is set to 0 when pulses are canceled.
<4> The integrator of the speed controller is re-parameterized to become a PT1 filter through a feedback element (p1494).
<5> Setting rule: p0341, p0342 and p1498 are correctly set if the r1480 speed output displays values around 0 when accelerating in sensorless operation.

1	2	3	4	5	6	7	8
DO: SERVO					fp_5042_98_eng.vsd	Function diagram	- 5042 -
Servo control - Speed controller, M/n pre-control with encoder (p1402.4 = 1)					03.03.09 V04.04.03	SINAMICS S110	

Fig. 3-129 5042 – Speed controller, torque/speed pre-control with encoder (p1402.4 = 1)

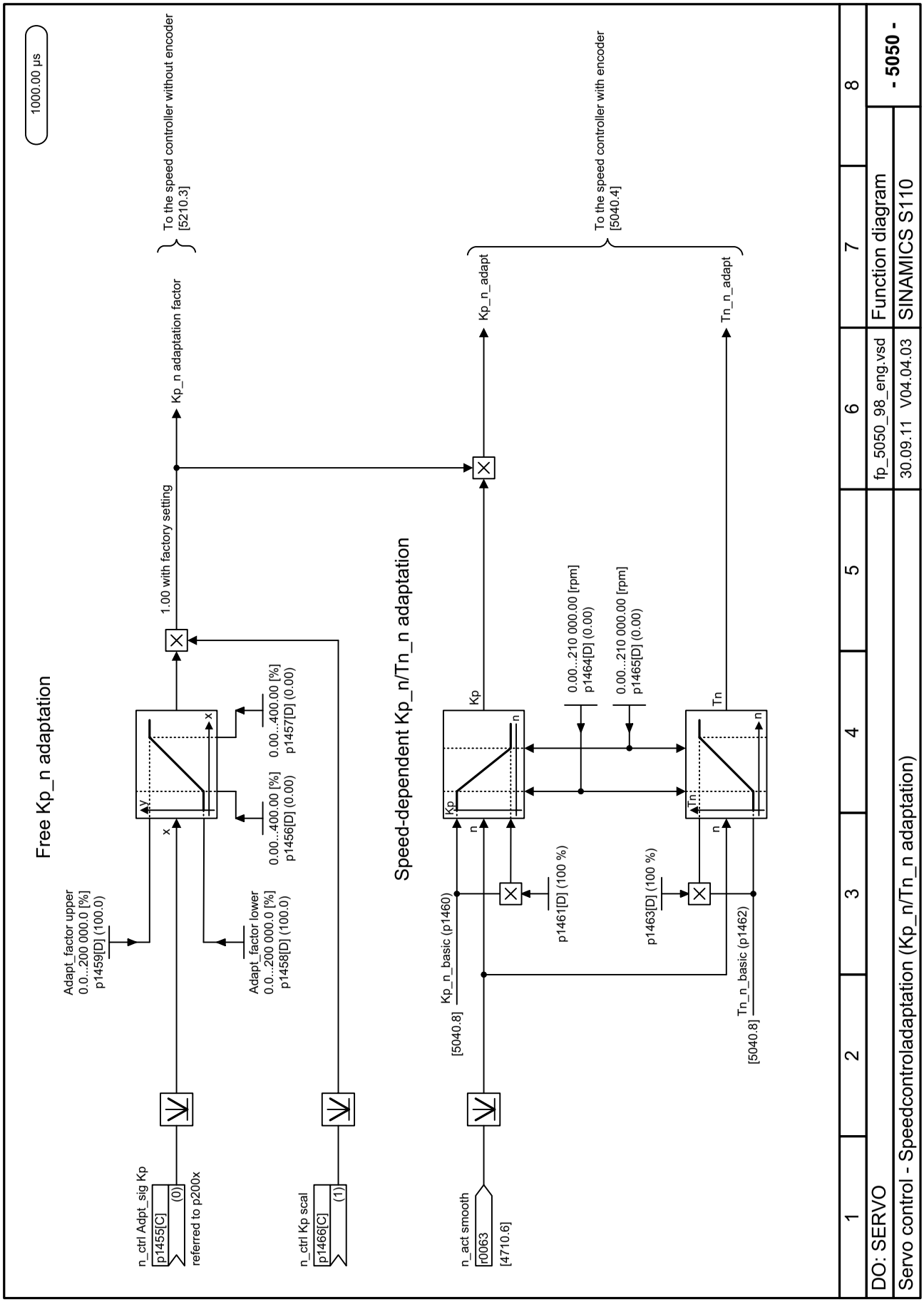

Fig. 3-130 5050 – Speed controller adaptation (Kp_n/Tn_n adaptation)

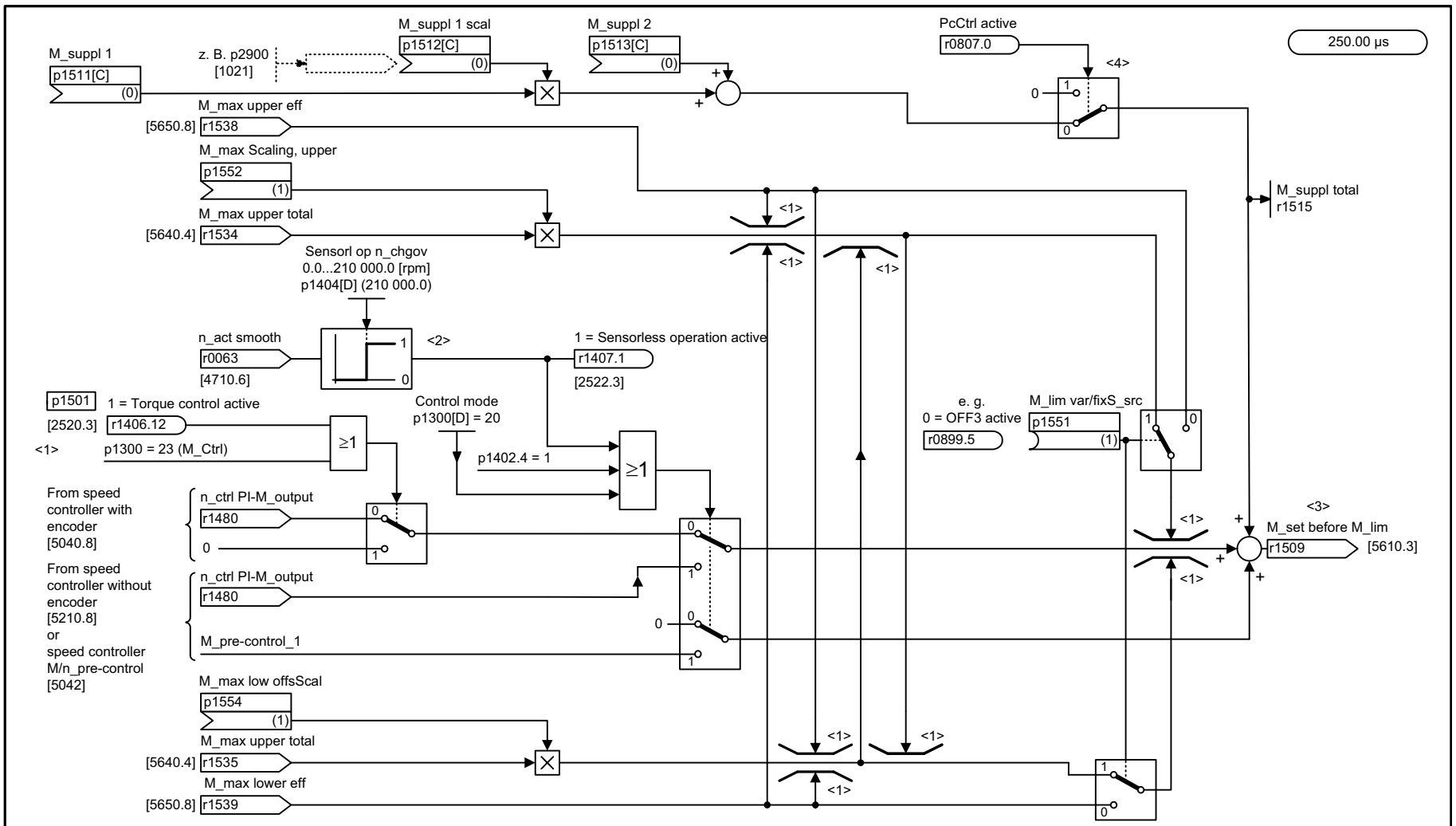

<1> Torque control can only be activated for operation with encoder.
A related message is output if:
1) Sensorless operation is active and closed-loop torque control is requested (r1406.12 = 0 --> 1).
2) Torque control is active and n_act smooth > p1404.
<2> Automatic changeover to sensorless operation (e.g. for extremely high-speed spindle drives).
<3> When the pulses are canceled, r1509 is set to 0.
<4> Only if control priority is with control panel with speed setpoint input.

1	2	3	4	5	6	7	8
DO: SERVO					fp_5060_98_eng.vsd	Function diagram	- 5060 -
Servo control - Torque setpoint, control type changeover					30.09.11 V04.04.03	SINAMICS S110	

Fig. 3-131 5060 – Torque setpoint, control type changeover

Fig. 3-132 5210 – Speed controller without encoder

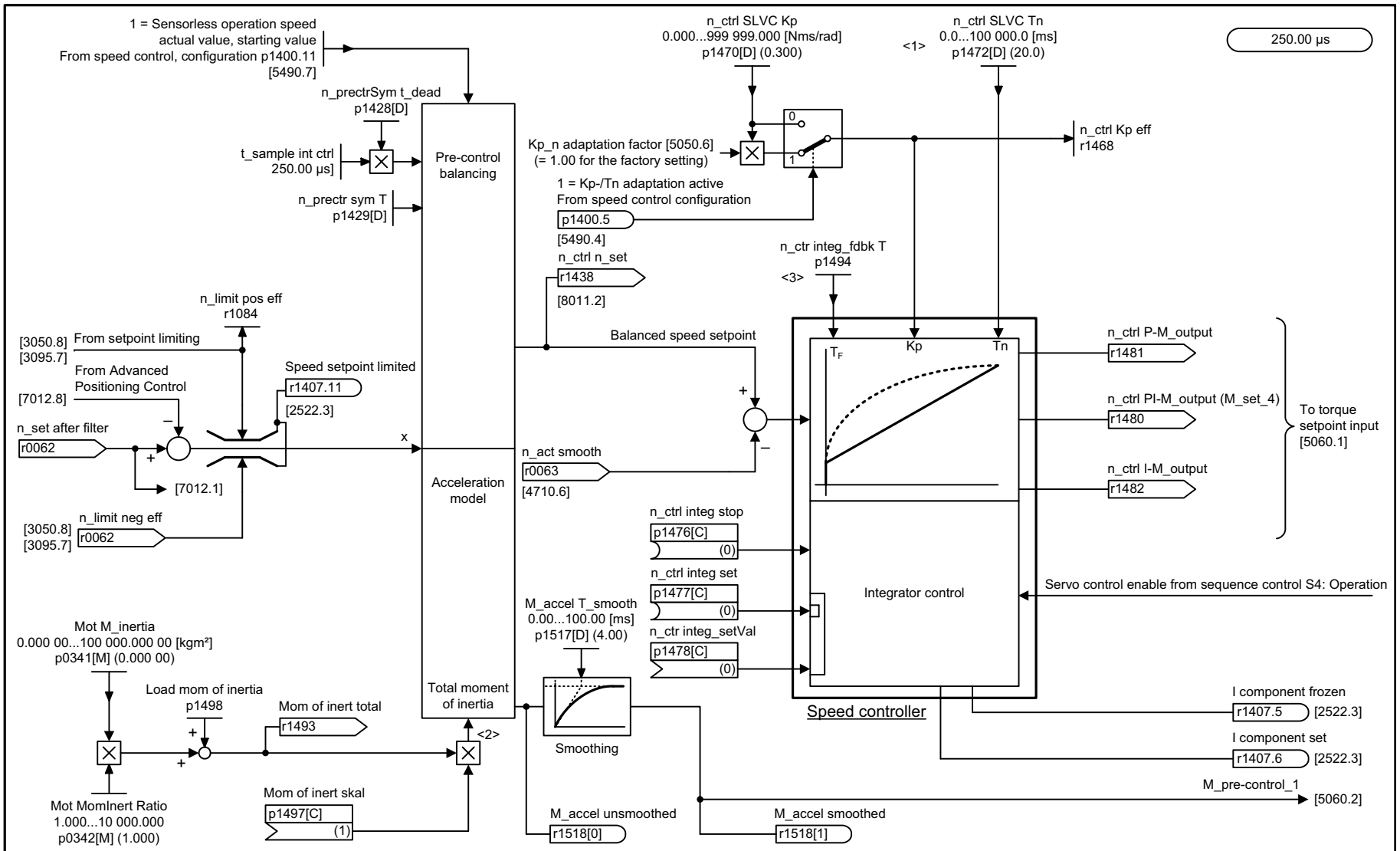

<1> For p1472 = 0 the I component is disabled (Integral time = ∞).
<2> Setting rule: p0341, p0342 and p1498 must be set correctly.
<3> The integrator of the speed controller is re-parameterized to become a PT1 filter through a feedback element (p1494).

1	2	3	4	5	6	7	8
DO: SERVO					fp_5210_98_eng.vsd	Function diagram	- 5210 -
Servo control - Speed controller without encoder					17.07.09 V04.04.03	SINAMICS S110	

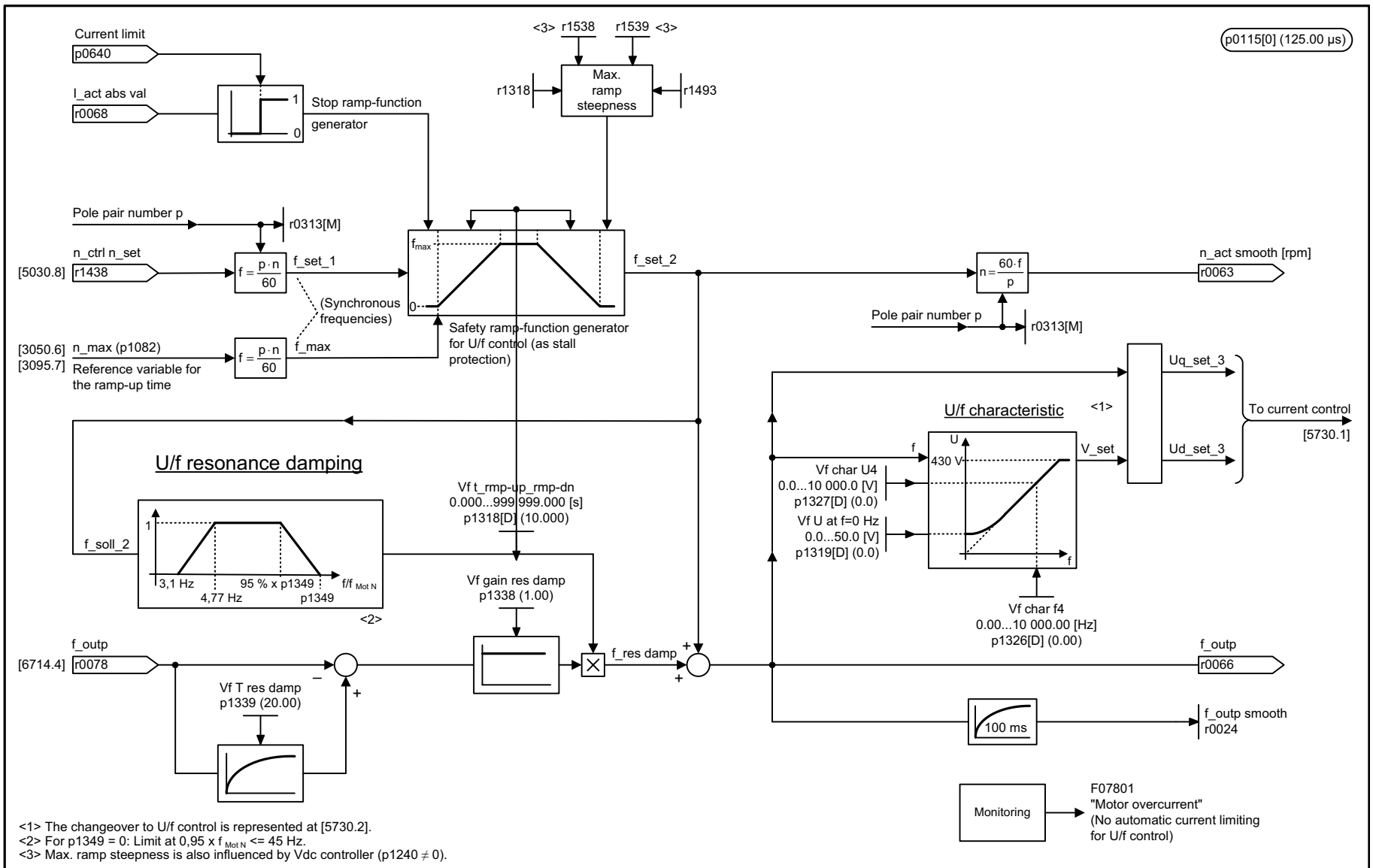

<1> The changeover to U/f control is represented at [5730.2].
<2> For p1349 = 0: Limit at 0,95 x $f_{Mot\,N}$ <= 45 Hz.
<3> Max. ramp steepness is also influenced by Vdc controller (p1240 ≠ 0).

1	2	3	4	5	6	7	8
DO: SERVO					fp_5300_98_eng.vsd	Function diagram	- 5300 -
Servo control - U/f control					30.09.11 V04.04.03	SINAMICS S110	

Fig. 3-133 5300 – U/f control

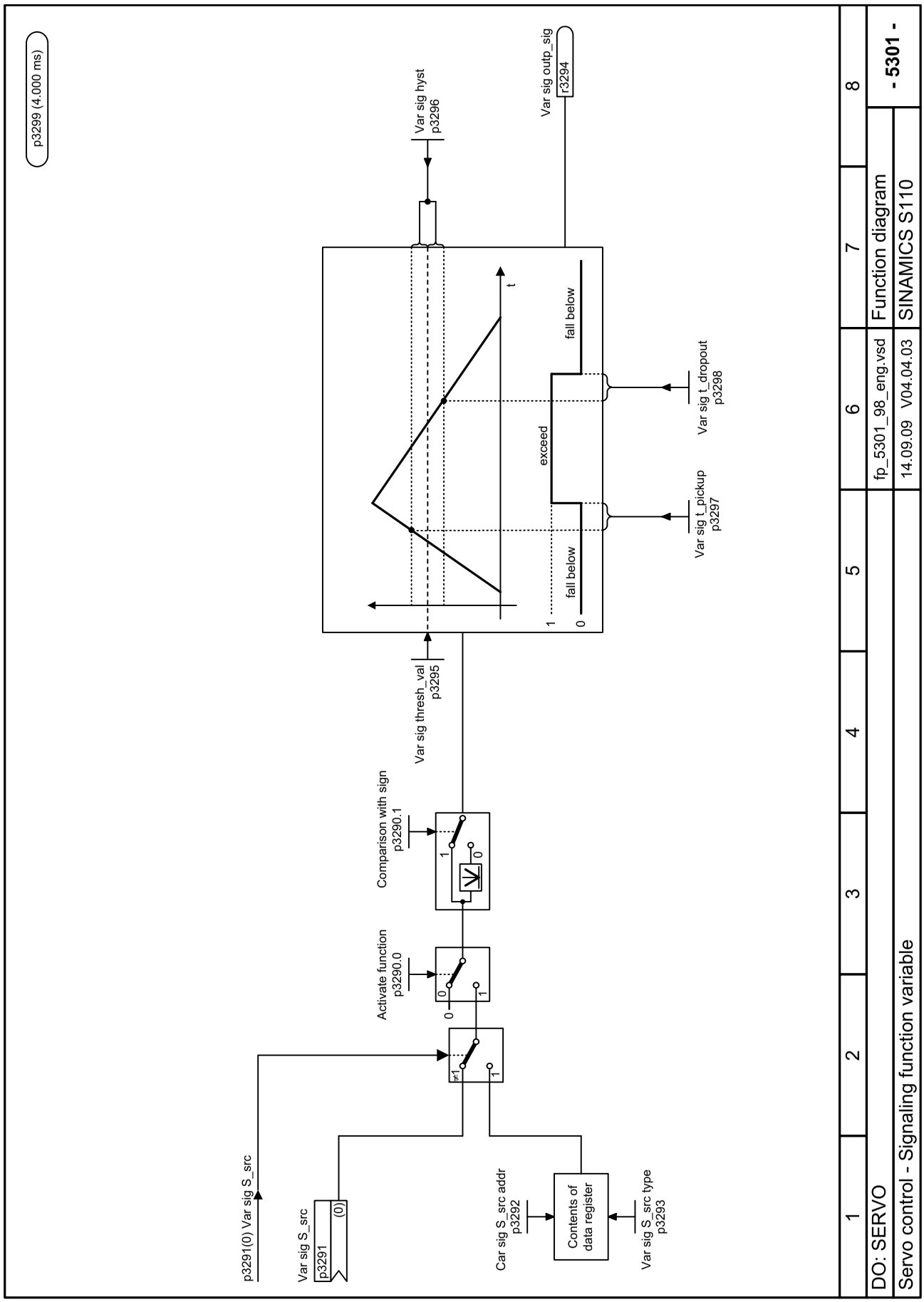

Fig. 3-134 5301 – Signaling function variable

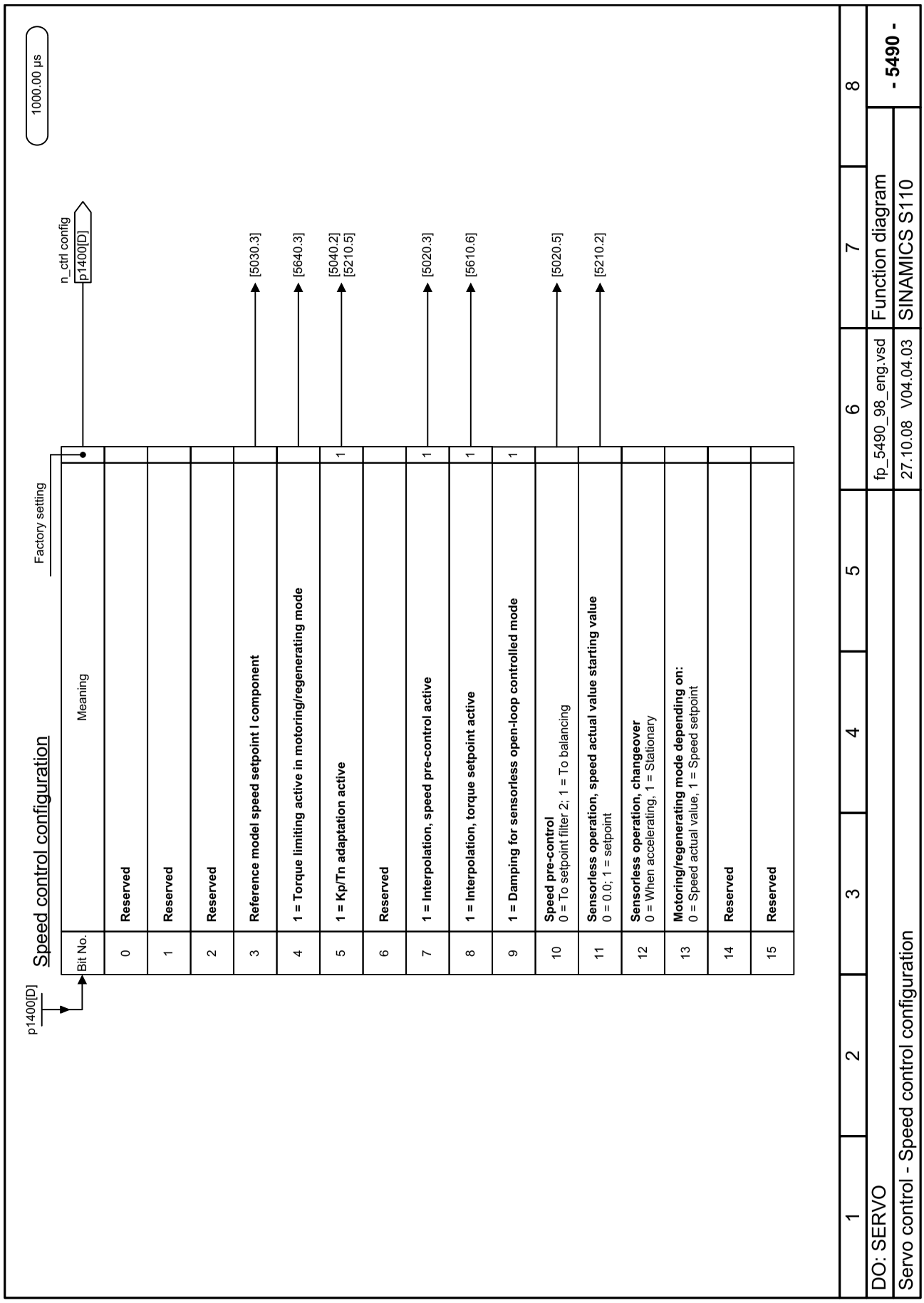

Fig. 3-135 5490 – Speed control configuration

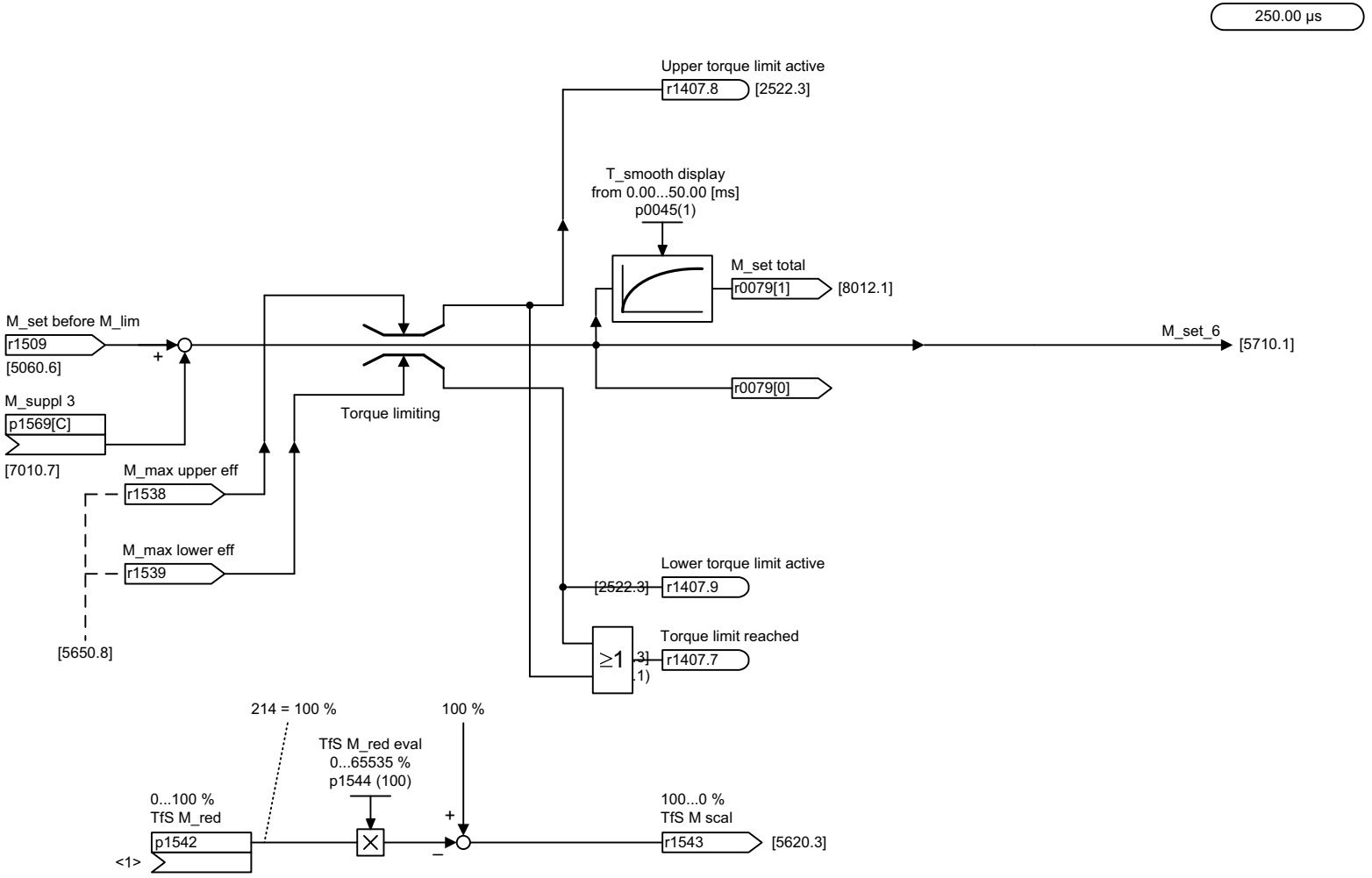

<1> As for torque reduction (e.g. for "Travel to fixed stop (TfS)" with process data MOMRED), refer to PROFIdrive telegrams 102 und 103 [2420]).

1	2	3	4	5	6	7	8
DO: SERVO					fp_5610_98_eng.vsd	Function diagram	- 5610 -
Servo control - Torque limiting/reduction/interpolator					27.10.08 V04.04.03	SINAMICS S110	

Fig. 3-136 5610 – Torque limiting/reduction/interpolator

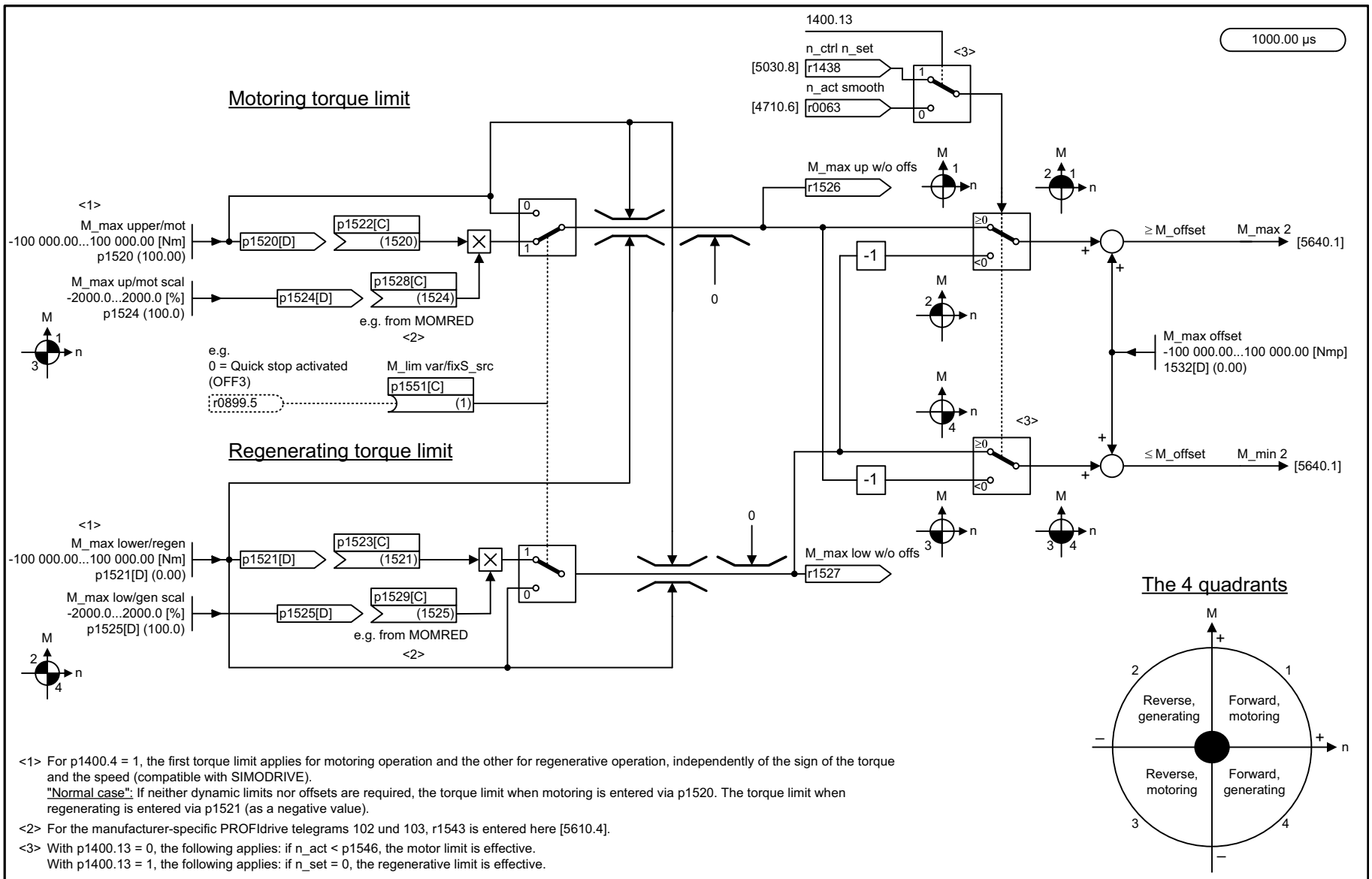

<1> For p1400.4 = 1, the first torque limit applies for motoring operation and the other for regenerative operation, independently of the sign of the torque and the speed (compatible with SIMODRIVE).
"Normal case": If neither dynamic limits nor offsets are required, the torque limit when motoring is entered via p1520. The torque limit when regenerating is entered via p1521 (as a negative value).

<2> For the manufacturer-specific PROFIdrive telegrams 102 und 103, r1543 is entered here [5610.4].

<3> With p1400.13 = 0, the following applies: if n_act < p1546, the motor limit is effective.
With p1400.13 = 1, the following applies: if n_set = 0, the regenerative limit is effective.

1	2	3	4	5	6	7	8
DO: SERVO					fp_5620_98_eng.vsd	Function diagram	- 5620 -
Servo control - Motoring/regenerating torque limit					17.10.08 V04.04.03	SINAMICS S110	

Fig. 3-137 5620 – Motoring/generating torque limit

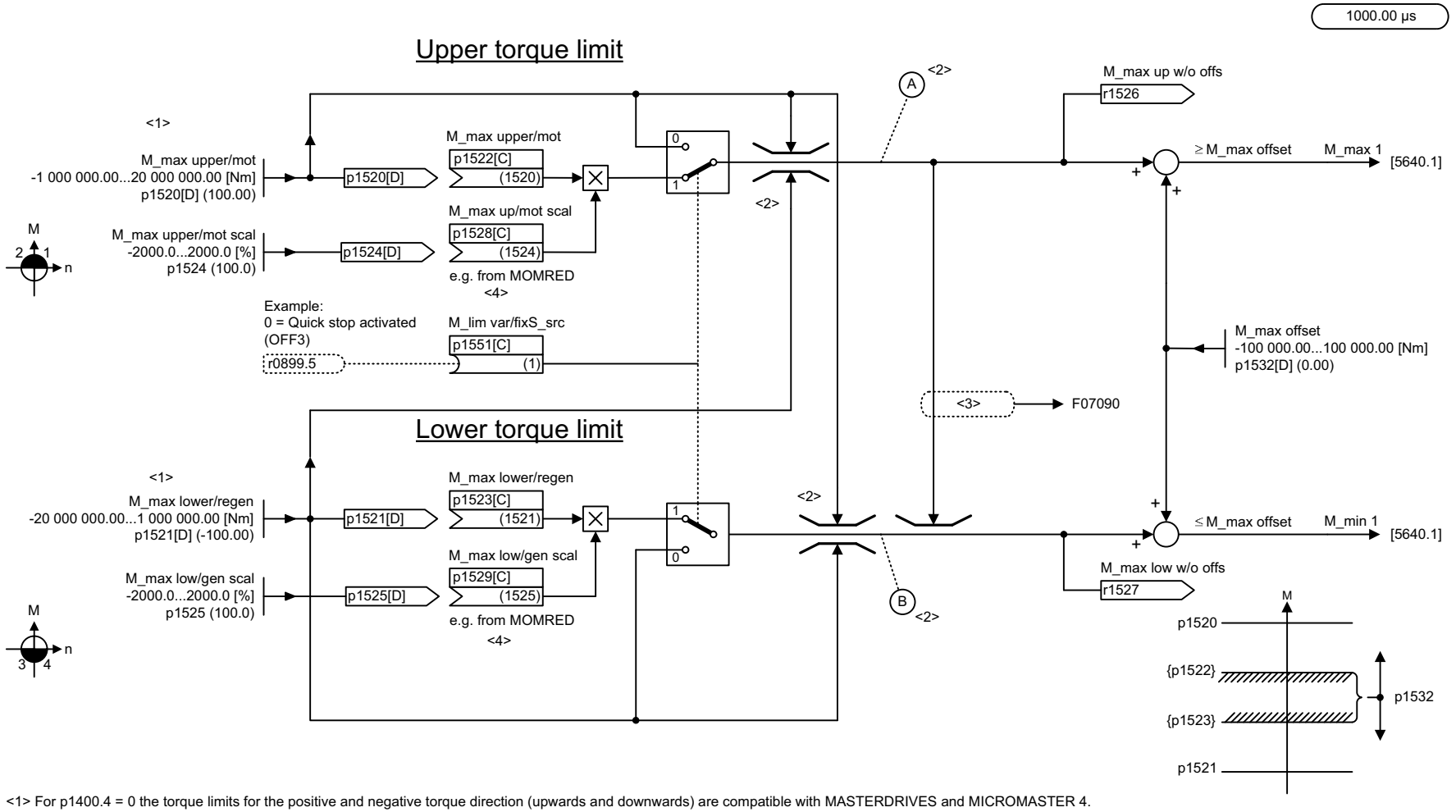

<1> For p1400.4 = 0 the torque limits for the positive and negative torque direction (upwards and downwards) are compatible with MASTERDRIVES and MICROMASTER 4.
"Normal case": If neither dynamic limits nor offsets are required, the upper torque limit is entered via p1520 and the lower via p1521 (as a negative value).

<2> Danger: Negative values at (A) or positive values at (B) represent a minimum torque for the other torque direction and can cause the motor to accelerate uncontrollably.

<3> The limiter ensures that the limits do not mutually "overtake" one another. With (A) < (B), Fault F07090 is initiated, which can also be disabled.

<4> For the manufacturer-specific PROFIdrive telegrams 102 und 103, r1543 is switched in here [5610.4].

1	2	3	4	5	6	7	8
DO: SERVO					fp_5630_98_eng.vsd	Function diagram	- 5630 -
Servo control - Upper/lower torque limit					30.10.08 V04.04.03	SINAMICS S110	

Fig. 3-138 5630 – Upper/lower torque limit

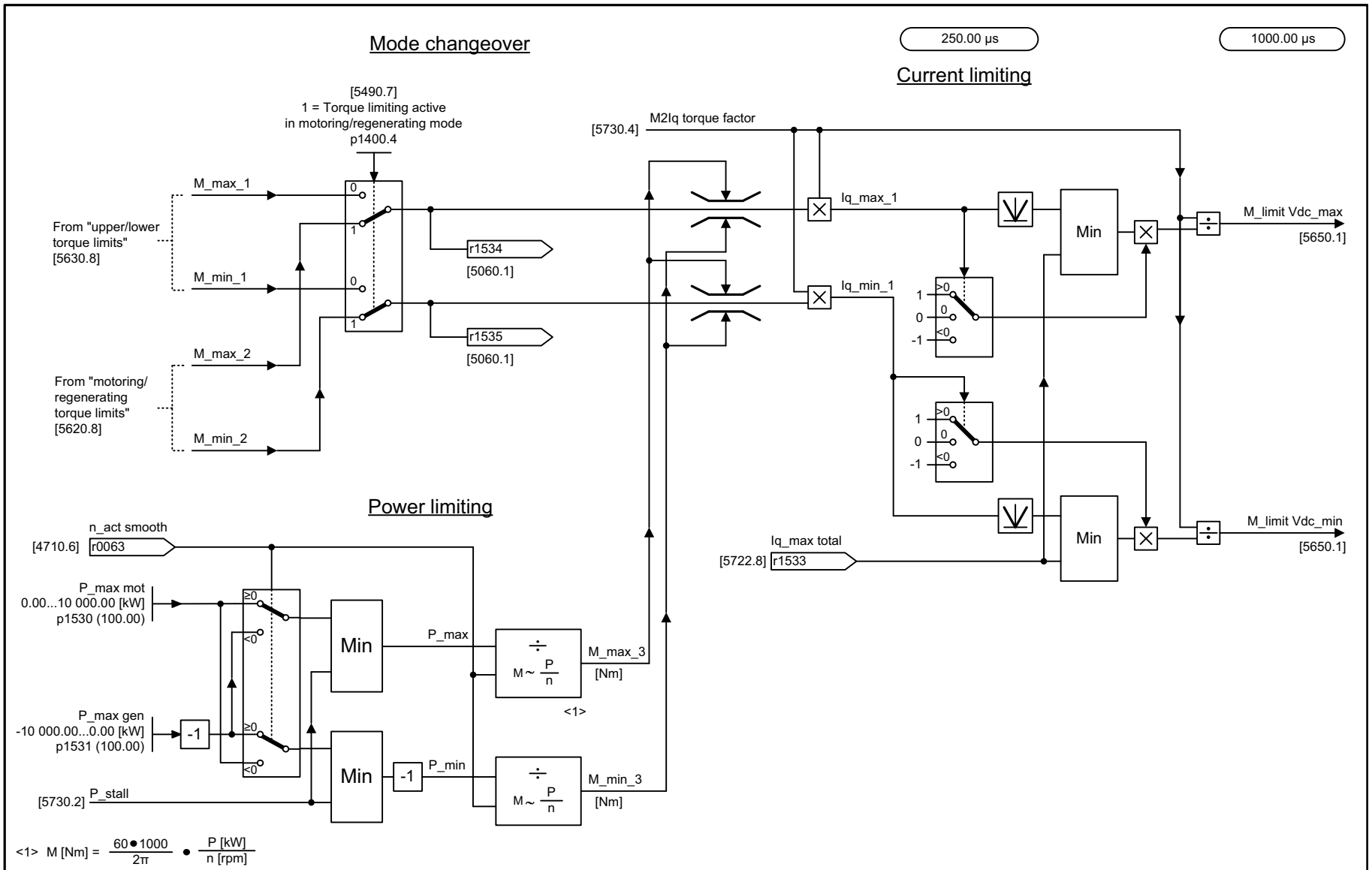

1	2	3	4	5	6	7	8
DO: SERVO					fp_5640_98_eng.vsd	Function diagram	- 5640 -
Servo control - Mode changeover, power/current limiting					30.09.11 V04.04.03	SINAMICS S110	

Fig. 3-139 5640 – Mode changeover, power/current limiting

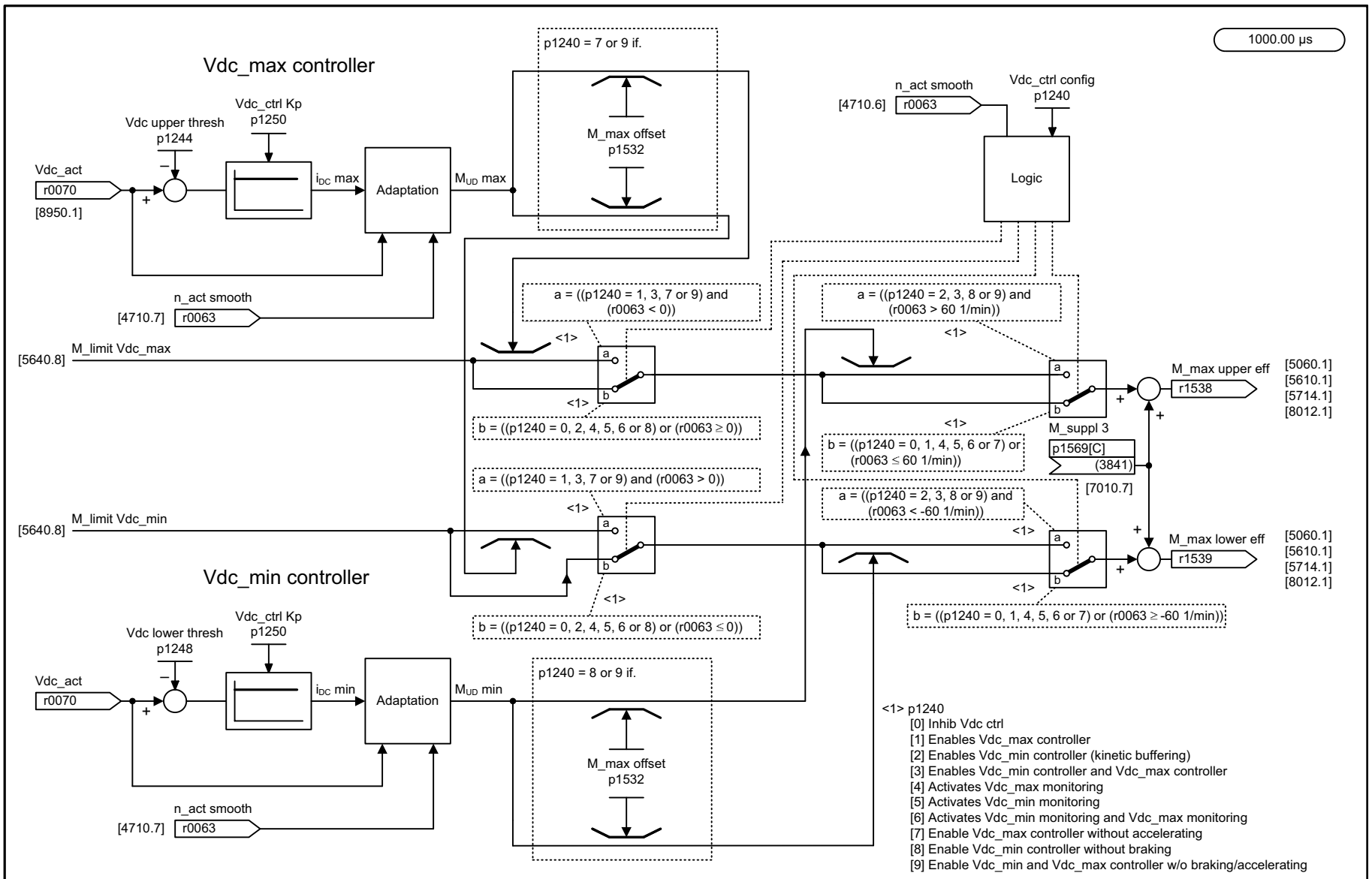

1	2	3	4	5	6	7	8
DO: SERVO					fp_5650_98_eng.vsd	Function diagram	- 5650 -
Servo control - Vdc_max controller and Vdc_min controller					19.10.09 V04.04.03	SINAMICS S110	

Fig. 3-140 5650 – Vdc_max controller and Vdc_min controller

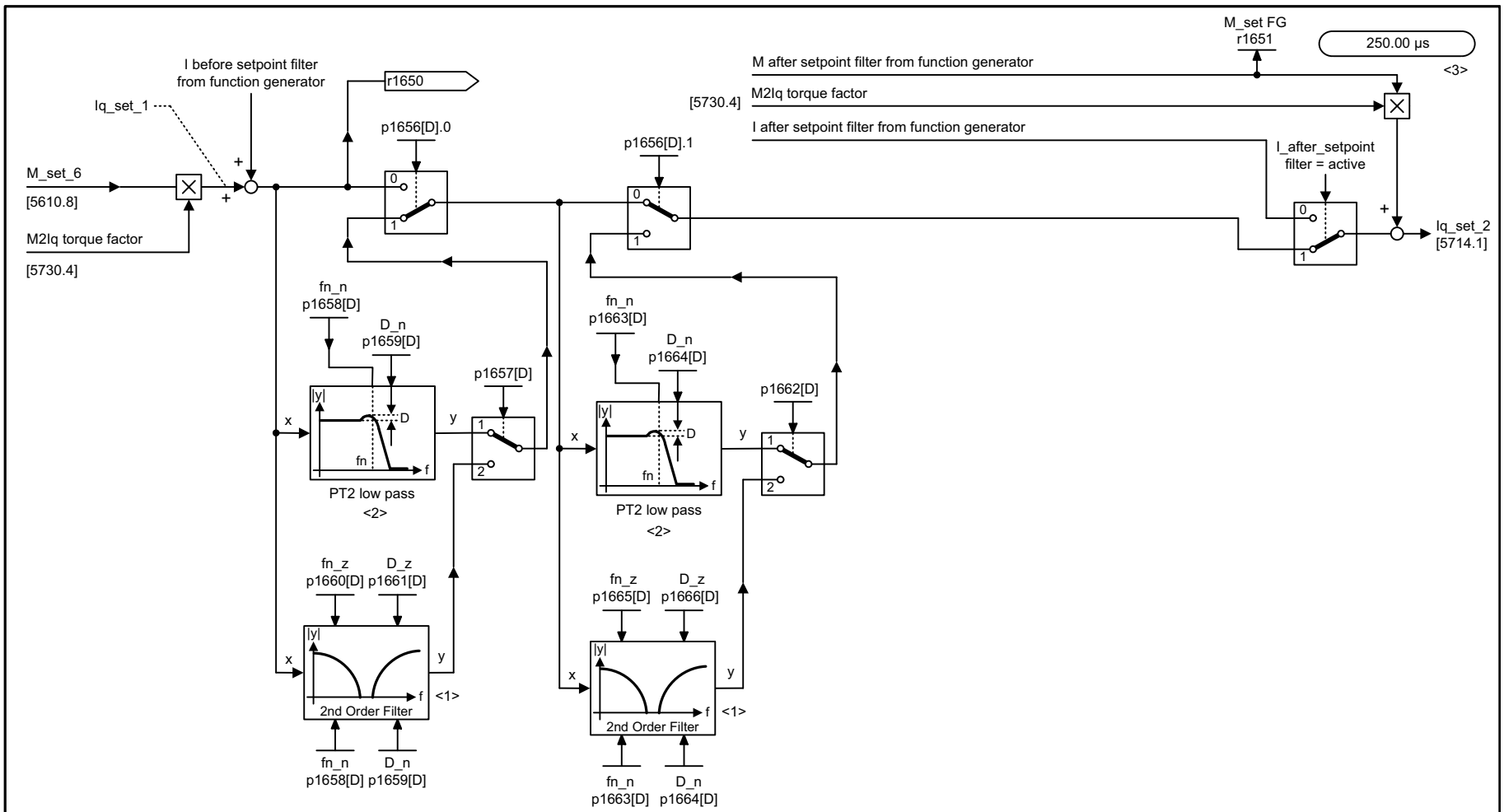

<1> General 2nd-order filter (detailed representation at [1022]).
<2> PT2 low pass (detailed representation at [1022]).
<3> For p1699 = 1, the parameter settings are transferred to the controller.

Monitoring → F07420
"Current setpoint filter natural frequency > Shannon frequency"

1	2	3	4	5	6	7	8
DO: SERVO					fp_5710_98_eng.vsd	Function diagram	- 5710 -
Servo control - Current setpoint filter					08.12.10 V04.04.03	SINAMICS S110	

Fig. 3-141 5710 – Current setpoint filter

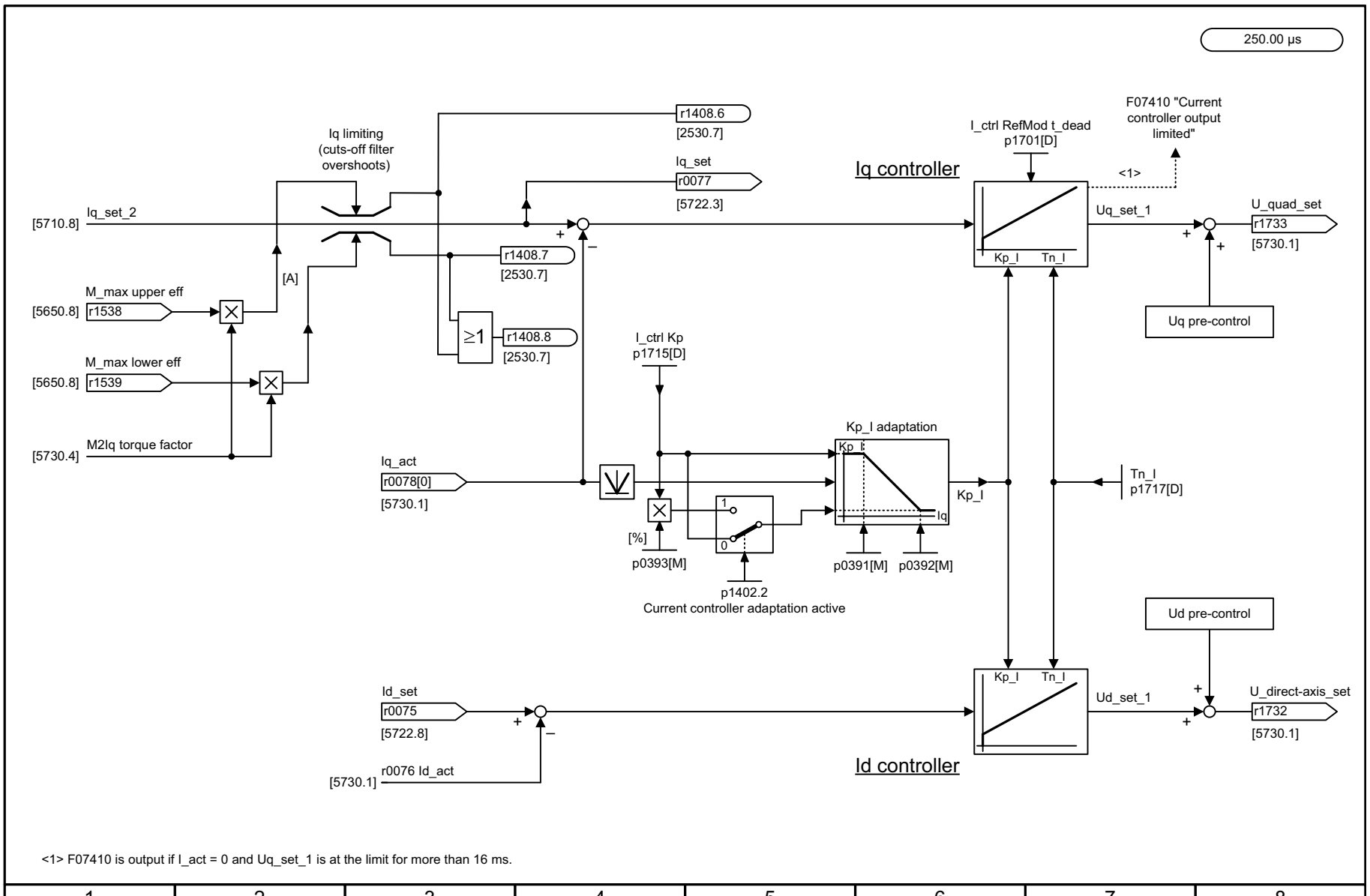

<1> F07410 is output if I_act = 0 and Uq_set_1 is at the limit for more than 16 ms.

1	2	3	4	5	6	7	8
DO: SERVO					fp_5714_98_eng.vsd	Function diagram	- 5714 -
Servo control - Iq and Id controller					14.04.08 V04.04.03	SINAMICS S110	

Fig. 3-142 5714 – Iq and Id controllers

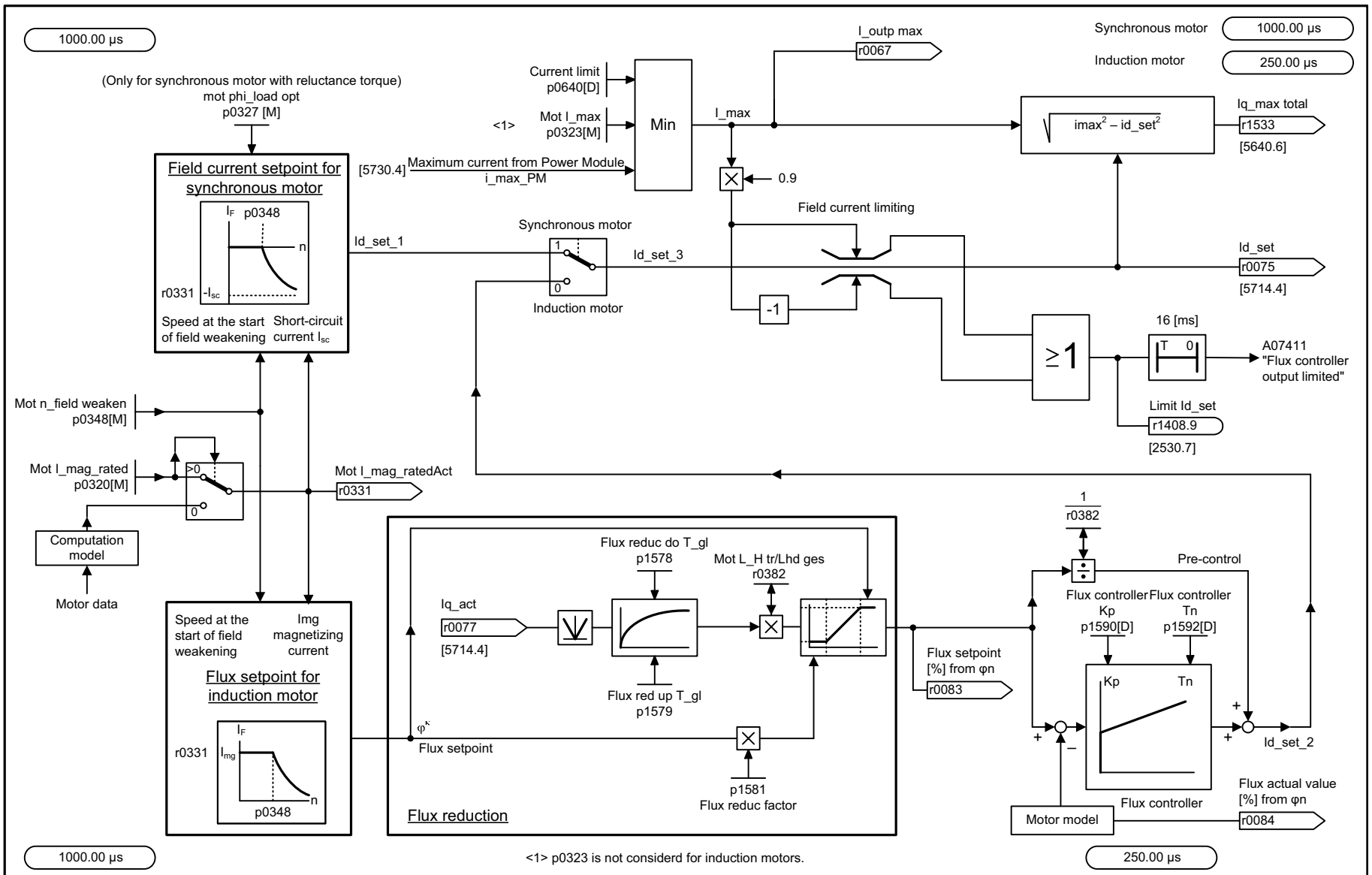

1	2	3	4	5	6	7	8
DO: SERVO					fp_5722_98_eng.vsd	Function diagram	- 5722 -
Servo control - Field current-/flux input, flux reduction, flux controller					17.07.09 V04.04.03	SINAMICS S110	

Fig. 3-143 5722 – Field current/flux input, flux reduction, flux controller

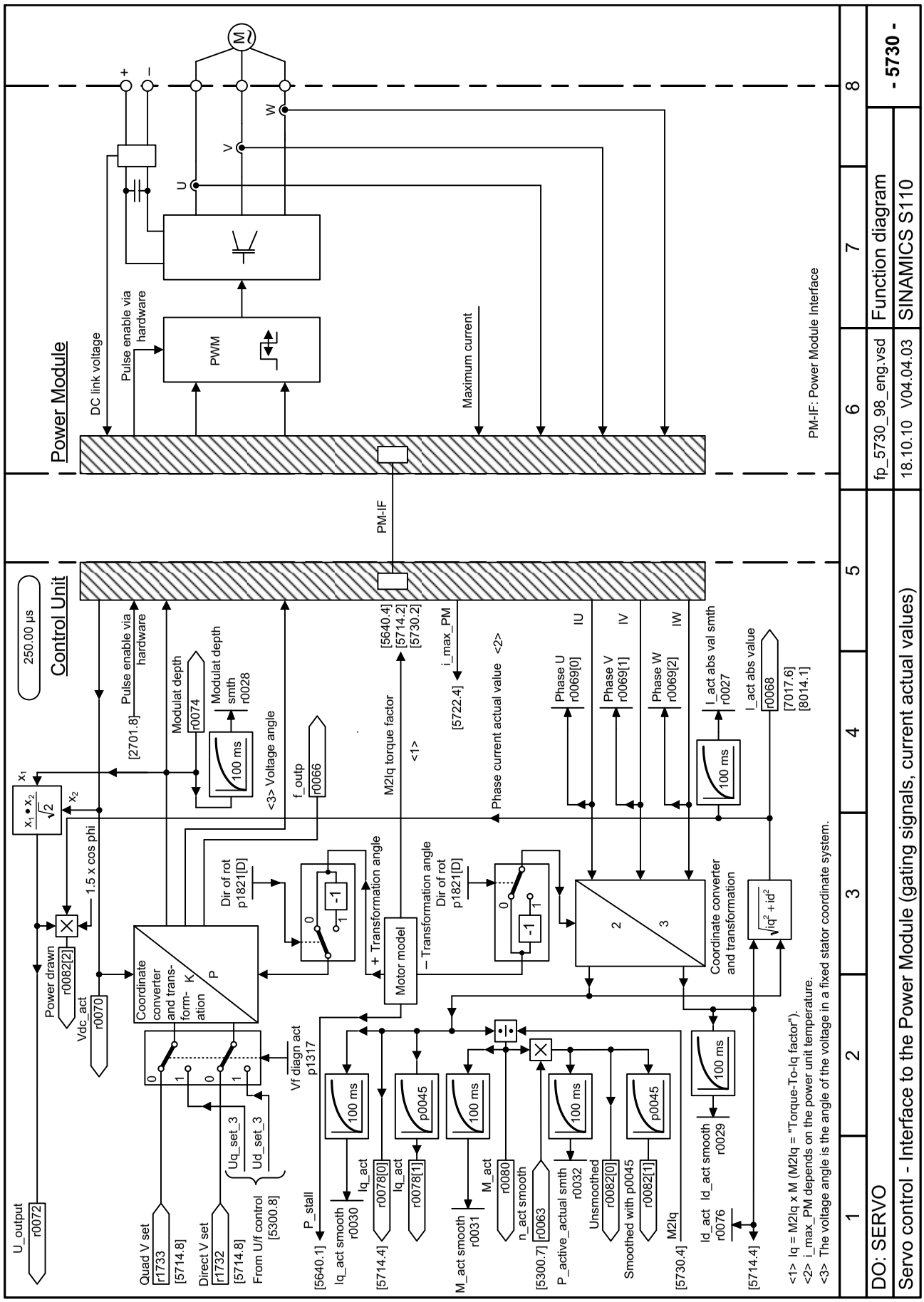

Fig. 3-144 5730 – Interface to the Power Module (gating signals, current actual values)

3.16 Technology functions

Function block diagrams

7014 – External Armature Short-Circuit (EASC, p0300 = 2xx or 4xx) 877

7017 – DC brake (p0300 = 1xx) 878

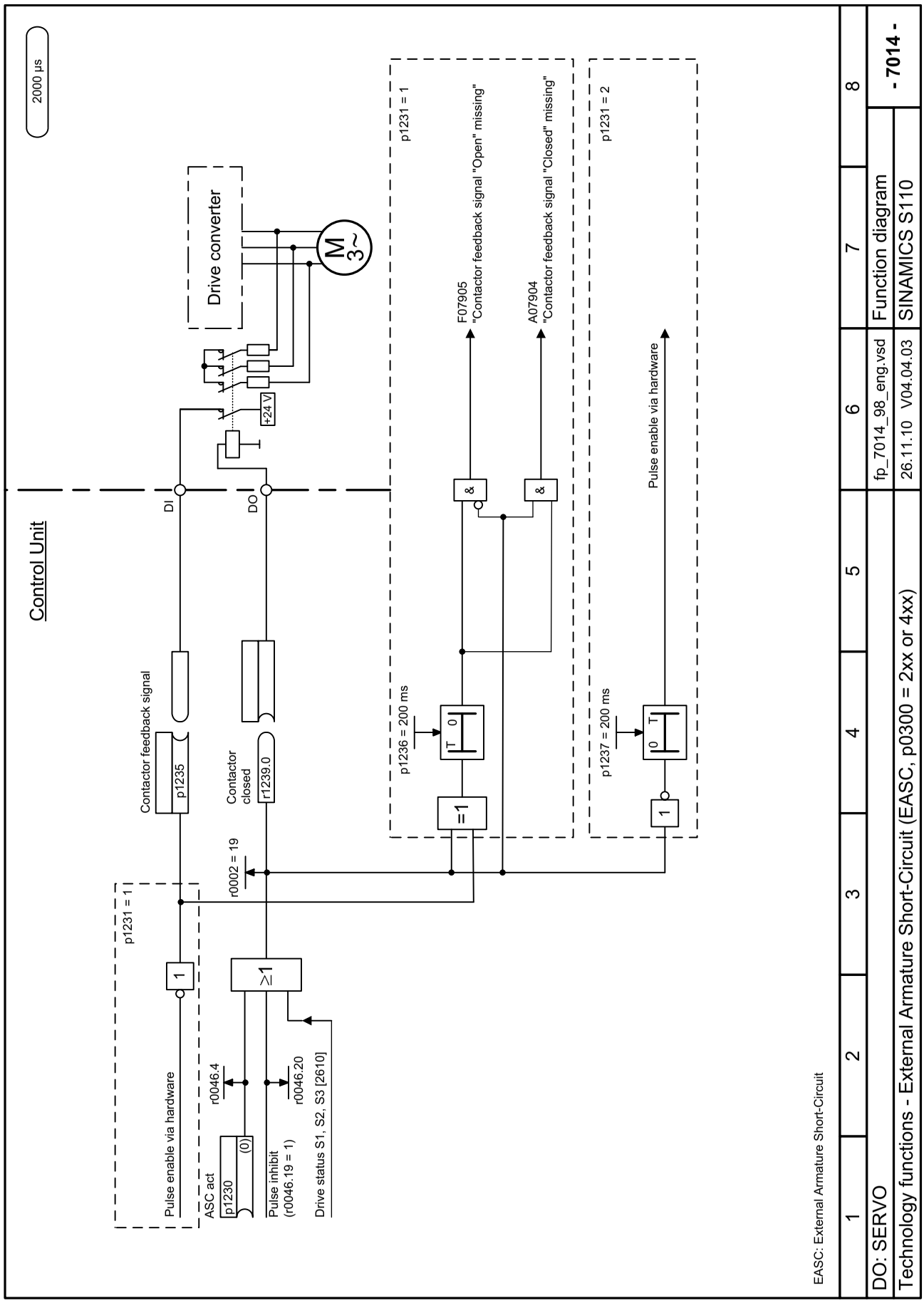

Fig. 3-145 7014 – External Armature Short-Circuit (EASC, p0300 = 2xx or 4xx)

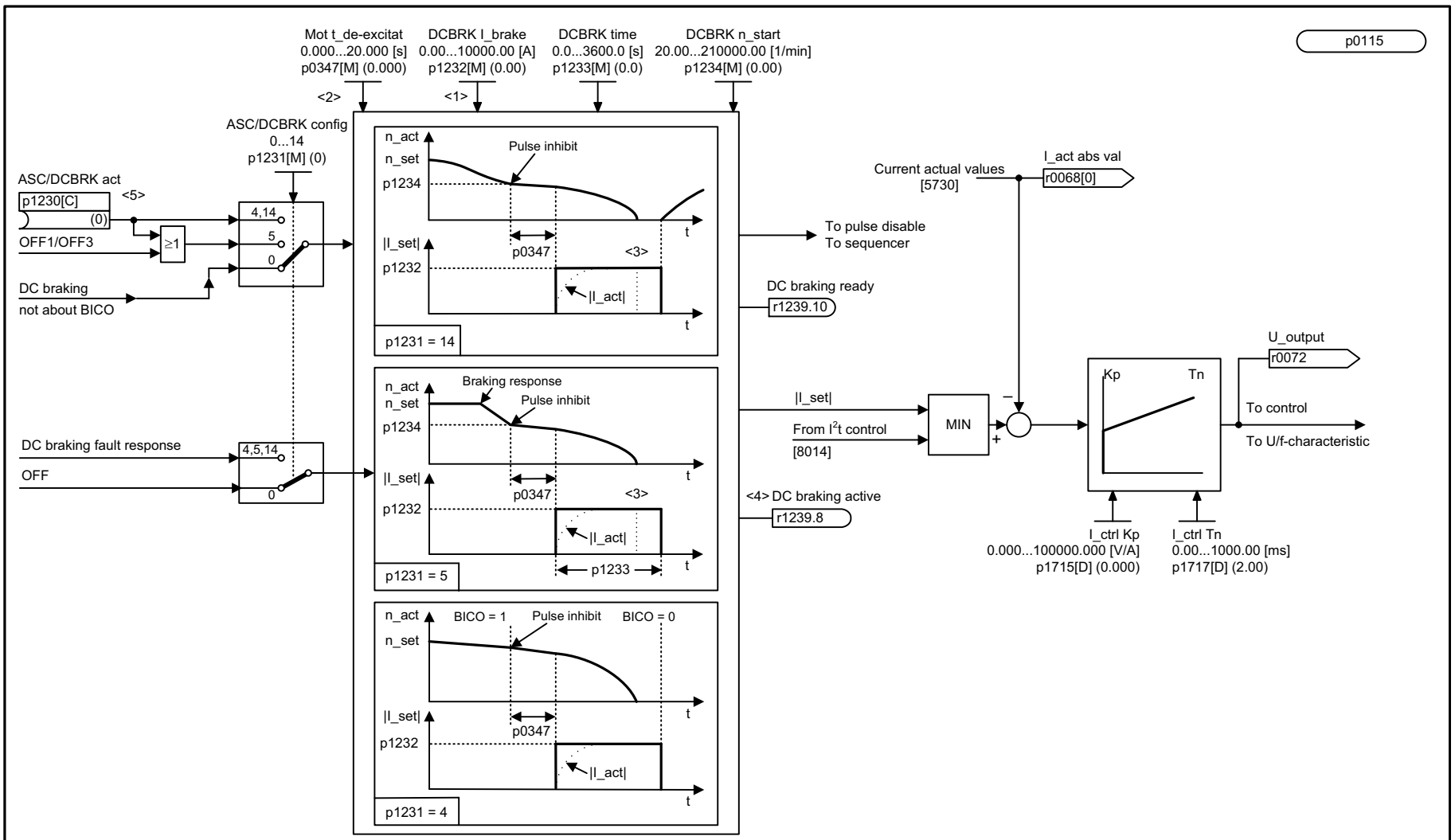

<1> The DC braking current is determined during automatic calculation (p0340 = 1).
<2> The de-magnetization time is determined during automatic calculation (p0340 = 1, 3).
<3> As soon as the standstill threshold (p1226) has been reached, the DC current injection will be aborted prematurely.
<4> Signal r1239.8 is only set while the DC braking is active.
<5> DC braking upon falling below the starting speed for DC braking (p1234).

1	2	3	4	5	6	7	8
DO: SERVO					fp_7017_98_eng.vsd	Function diagram	- 7017 -
Technology functions - DC braking (p0300 = 1xx)					11.04.11 V04.04.03	SINAMICS S110	

Fig. 3-146 7017 – DC brake (p0300 = 1xx)

3.17 Free function blocks (FBLOCKS)

Function block diagrams

7200 – General information	880
7210 – AND (AND function block with 4 inputs)	881
7212 – OR (OR function block with 4 inputs)	882
7214 – XOR (XOR function block with 4 inputs)	883
7216 – NOT (inverter)	884
7220 – ADD (adder with 4 inputs), SUB (subtracter)	885
7222 – MUL (multiplier), DIV (divider)	886
7224 – AVA (absolute value generator)	887
7230 – MFP (pulse generator), PCL (pulse contractor)	888
7232 – PDE (ON delay), PDF (OFF delay)	889
7234 – PST (pulse stretcher)	890
7240 – RSR (RS flip-flop), DFR (D flip-flop)	891
7250 – BSW (binary switch), NSW (numeric switch)	892
7260 – LIM (limiter)	893
7262 – PT1 (smoothing element)	894
7264 – INT (integrator), DIF (derivative-action element)	895
7270 – LVM (double-sided limit monitor with hysteresis)	896

General

<1>
Activation
p0108[DO_No].18 (0)

<2>

Run-time group	Run-time group property	Run-time group sampling time
0 1 . . . 9	p20000[0] p20000[1] . . . p20000[9]	r20001[0] r20001[1] . . . r20001[9]
9999	Function block is not calculated	

<1> The “free function blocks” function is activated in a drive object via p0108[DO_No].18 = 1 (bit 18 = 1, corresponds to 40000 hex).

<2> The run-time group that belongs to a function block is entered, for every function block, in the particular parameter for the run-time group (e.g. p20032 for AND 0 to [7210]).

1	2	3	4	5	6	7	8
DO: All Objects					fp_7200_98_eng.vsd	Function diagram	- 7200 -
FBLOCKS - General					20.04.09 V04.04.03	SINAMICS S110	

Fig. 3-147 7200 – General information

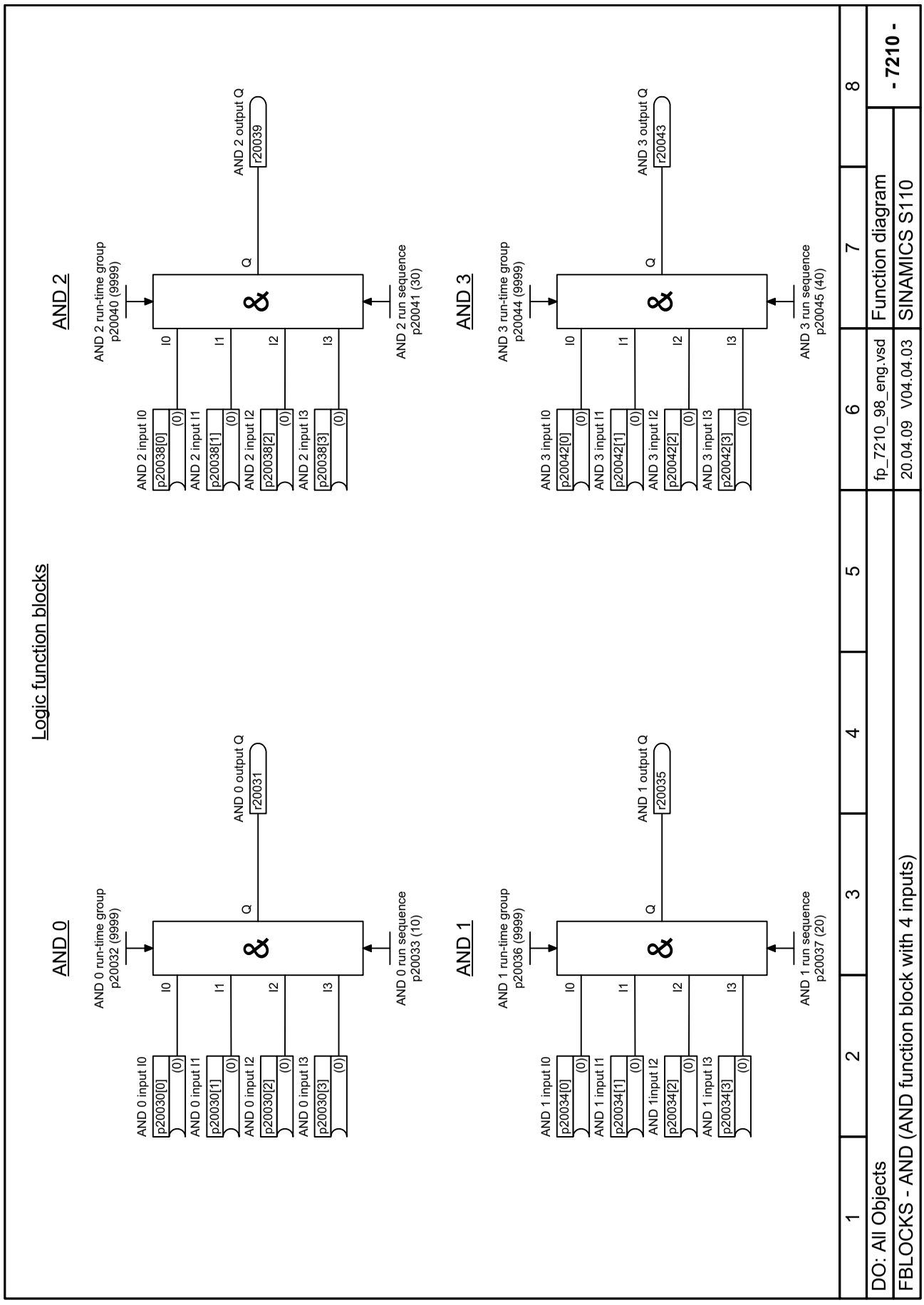

Fig. 3-148 7210 – AND (AND function block with 4 inputs)

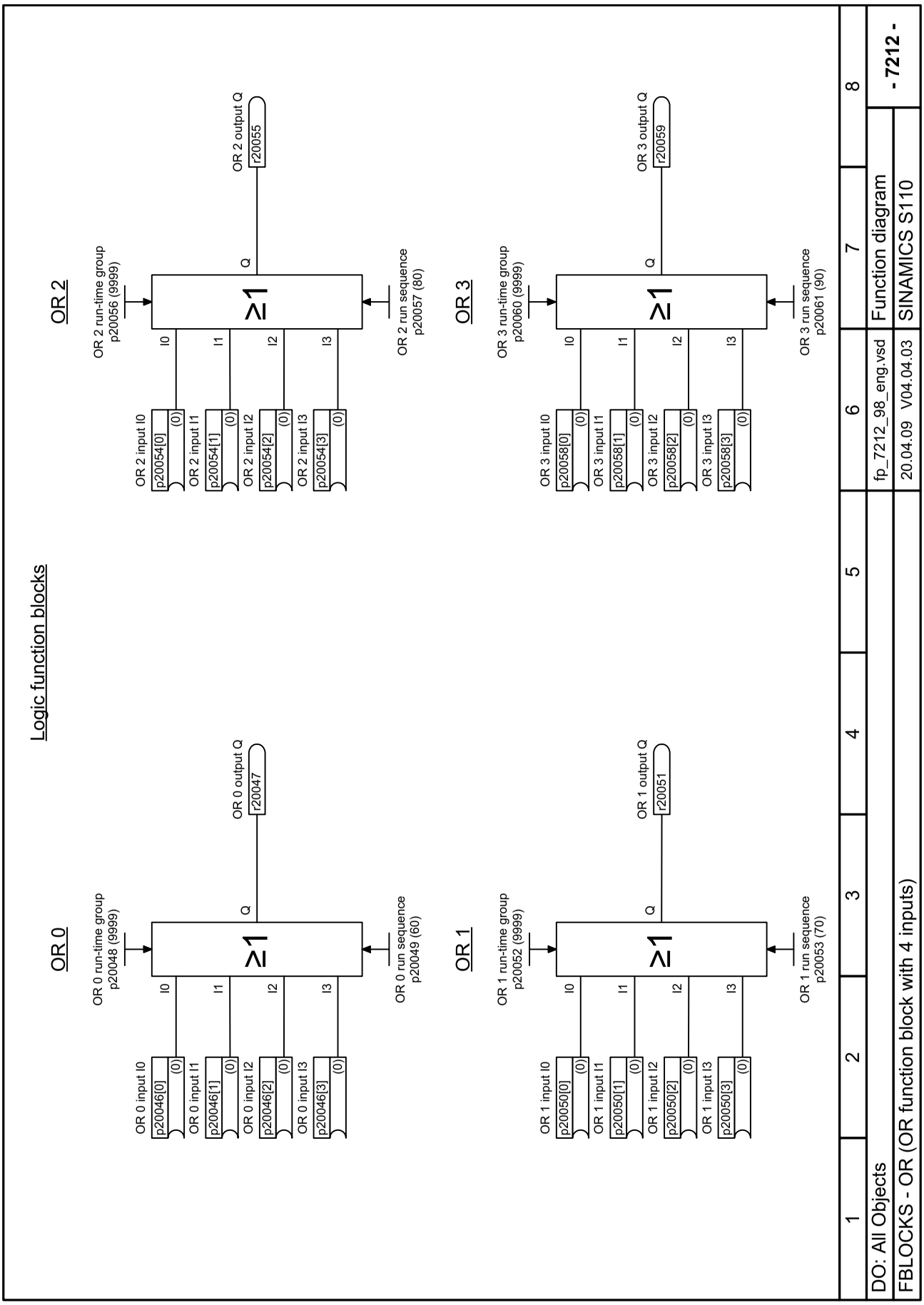

Fig. 3-149 7212 – OR (OR function block with 4 inputs)

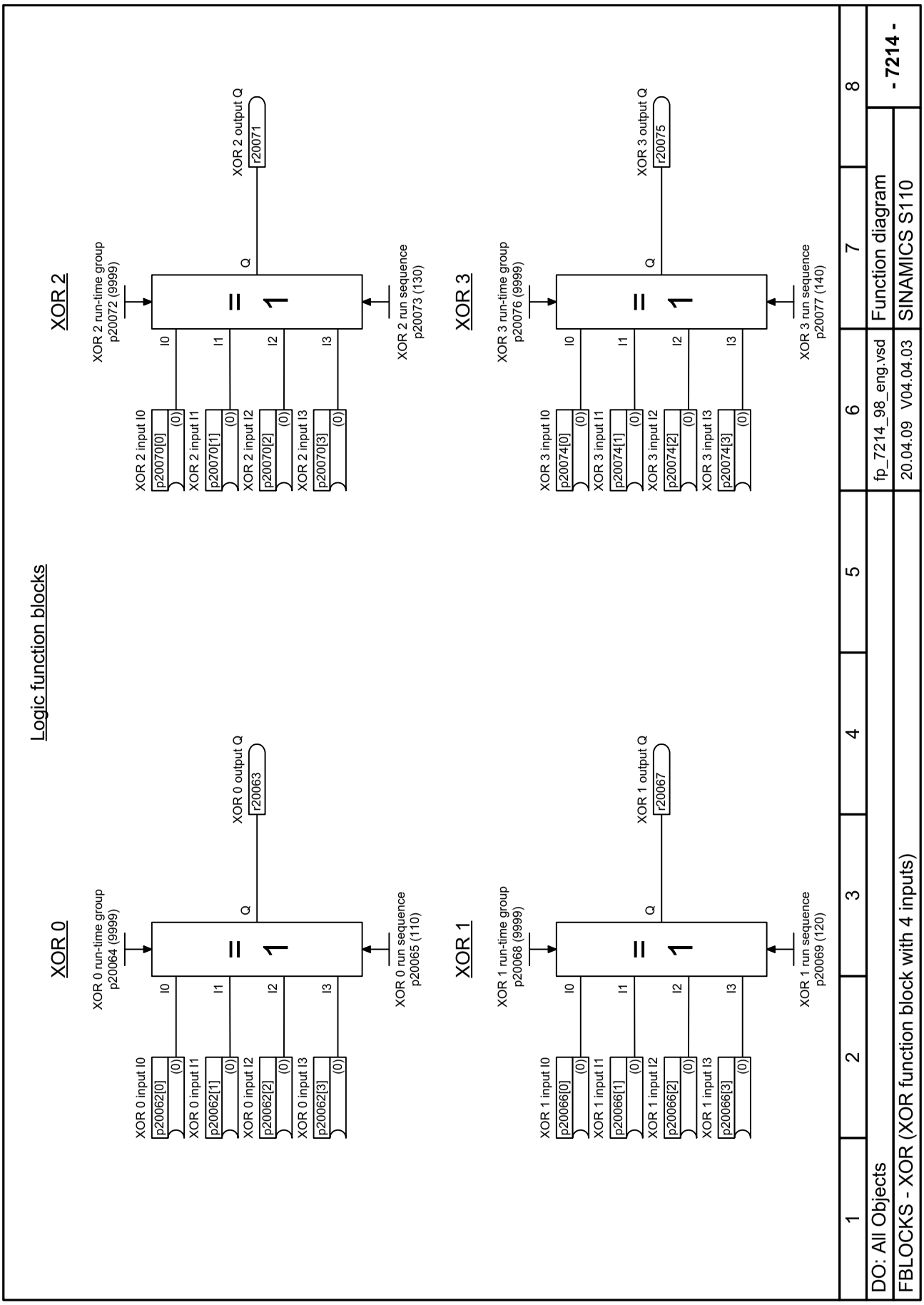

Fig. 3-150 7214 – XOR (XOR function block with 4 inputs)

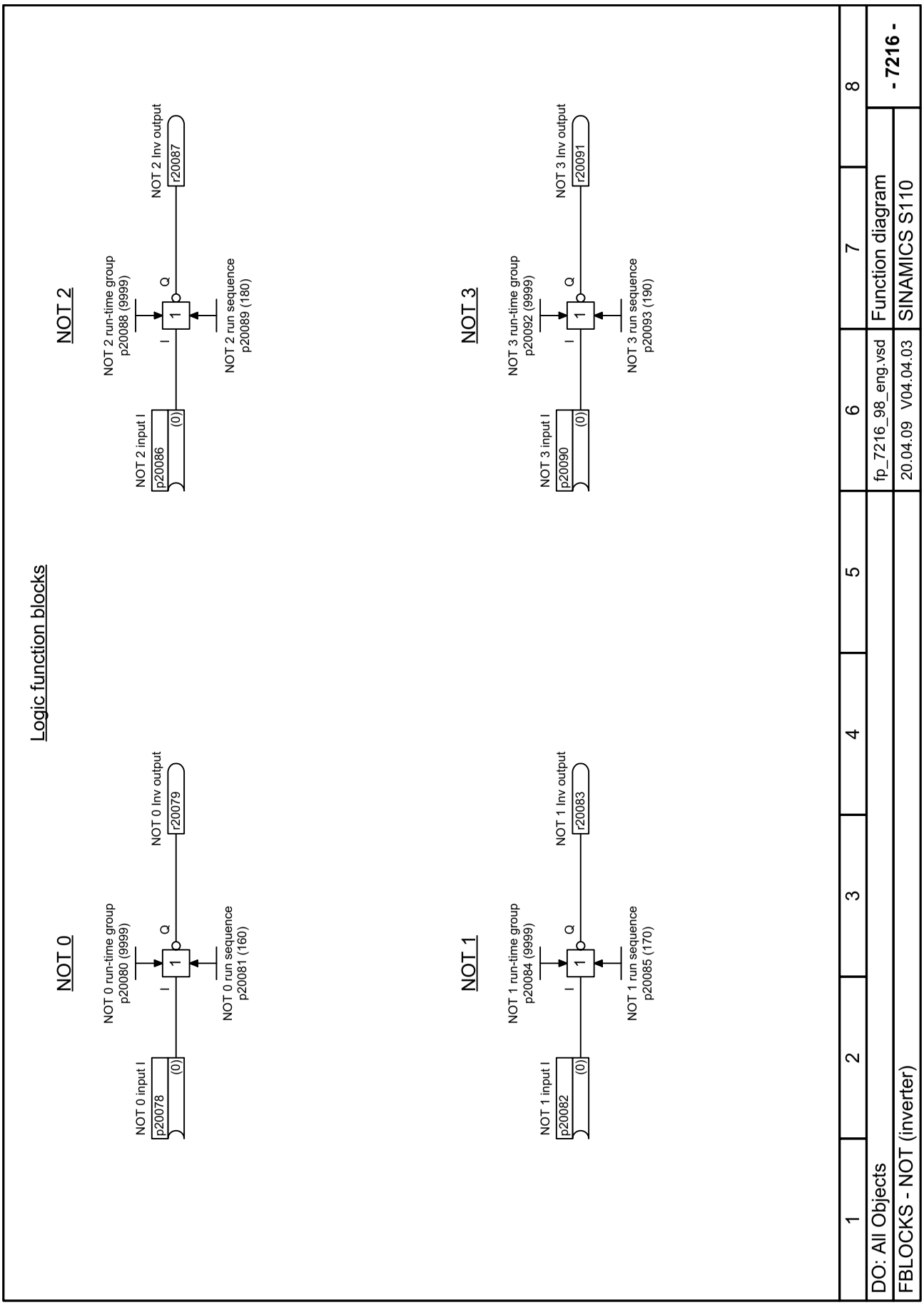

Fig. 3-151 7216 – NOT (inverter)

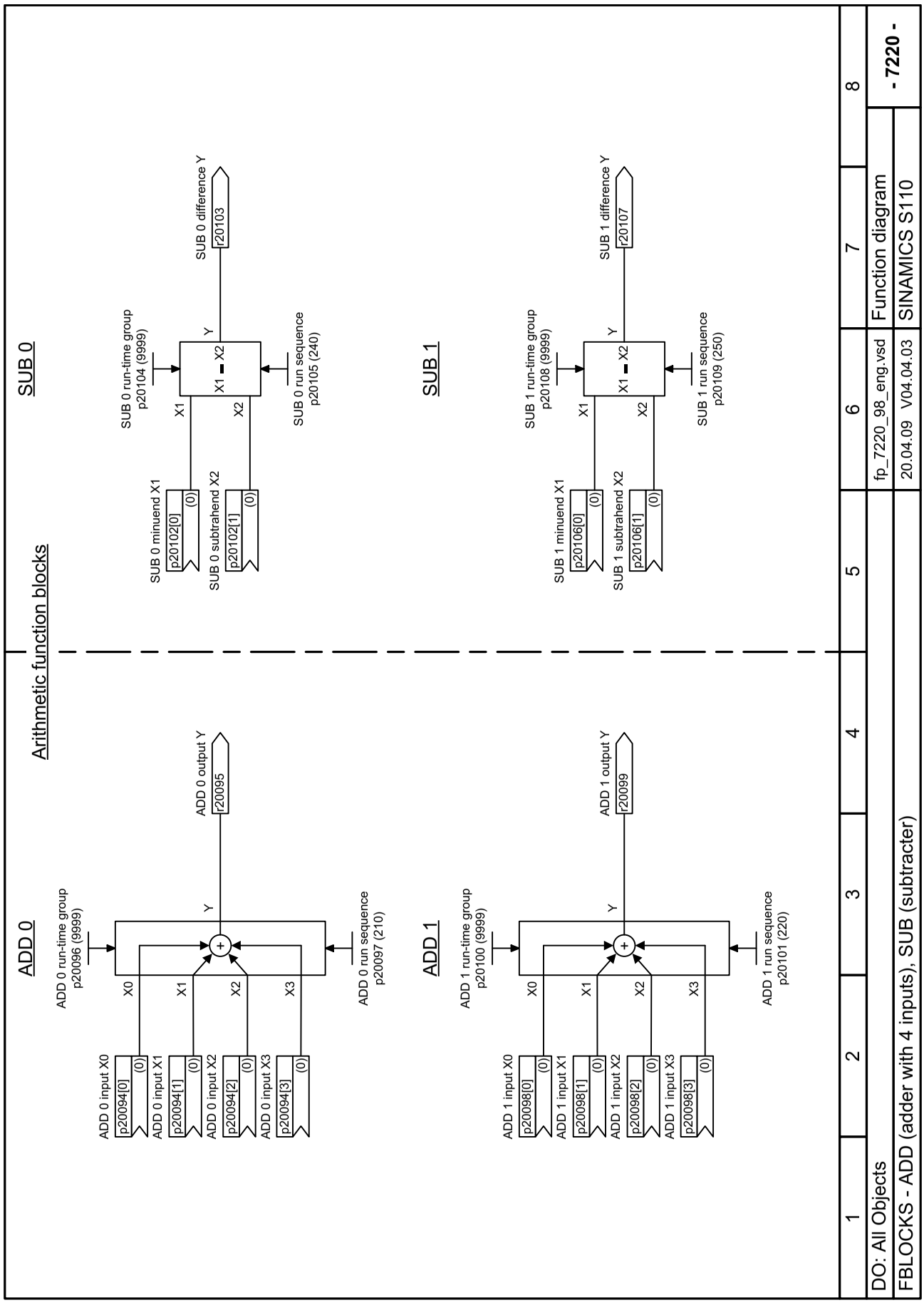

Fig. 3-152 7220 – ADD (adder with 4 inputs), SUB (subtracter)

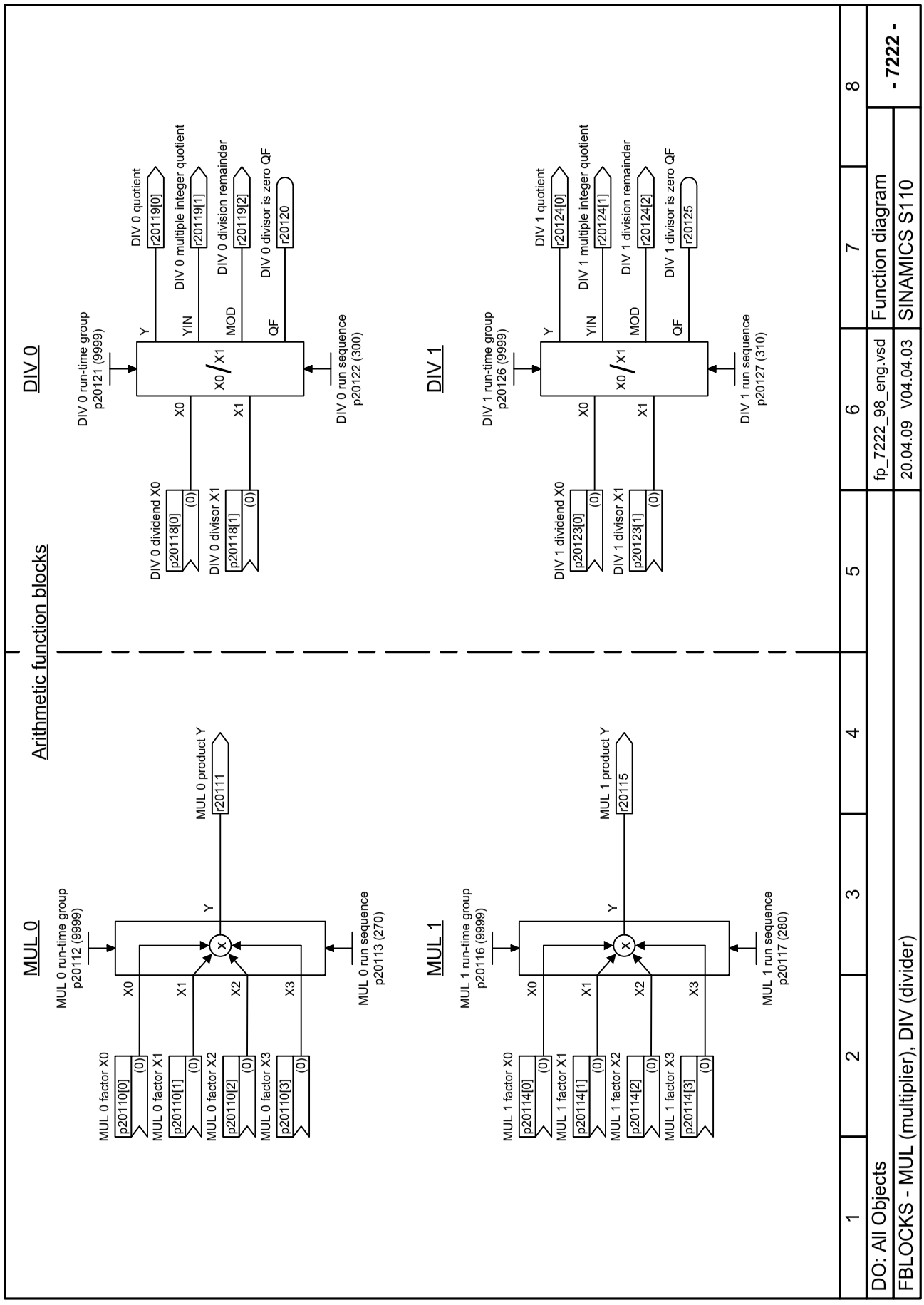

Fig. 3-153 7222 – MUL (multiplier), DIV (divider)

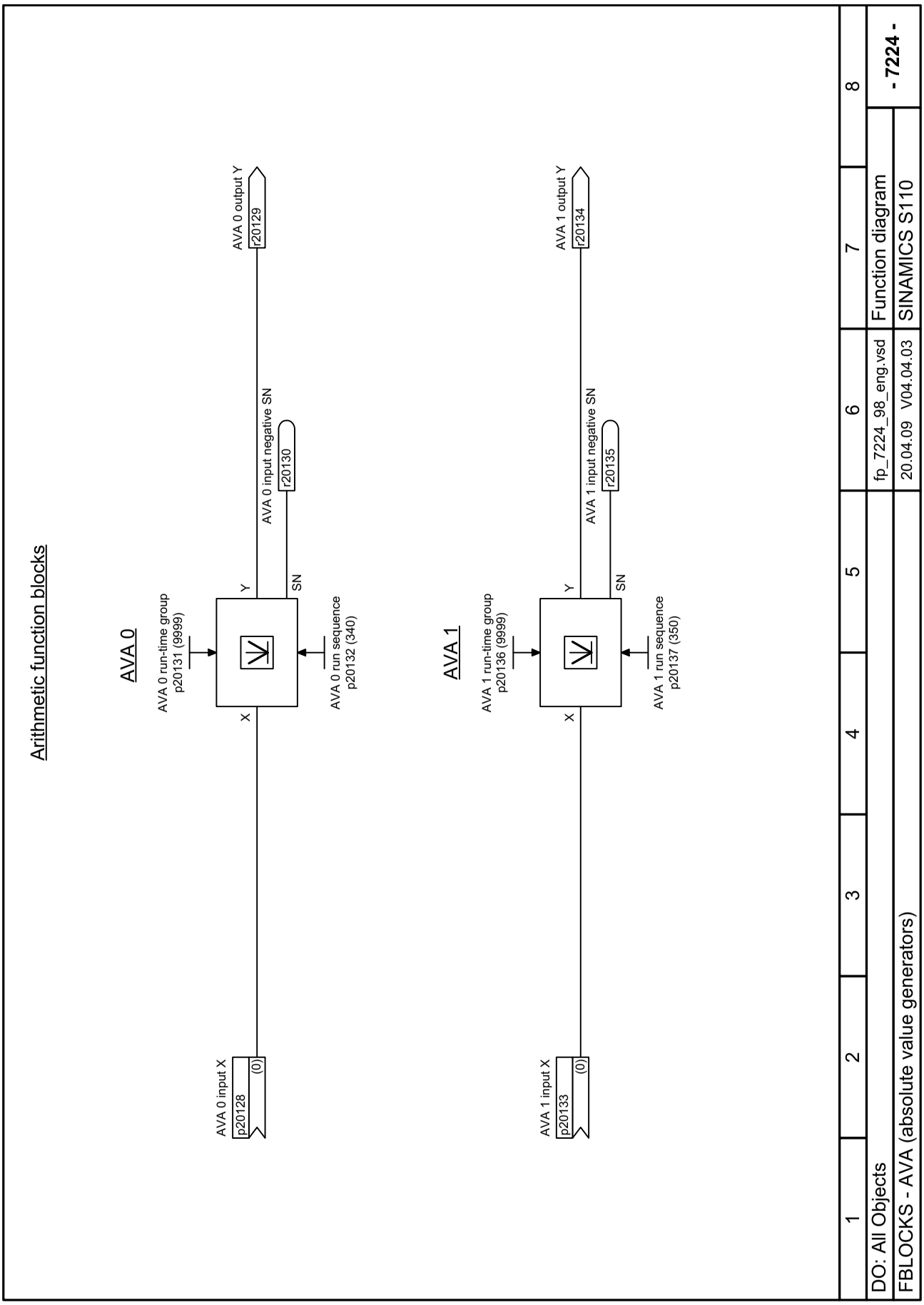

Fig. 3-154 7224 – AVA (absolute value generator)

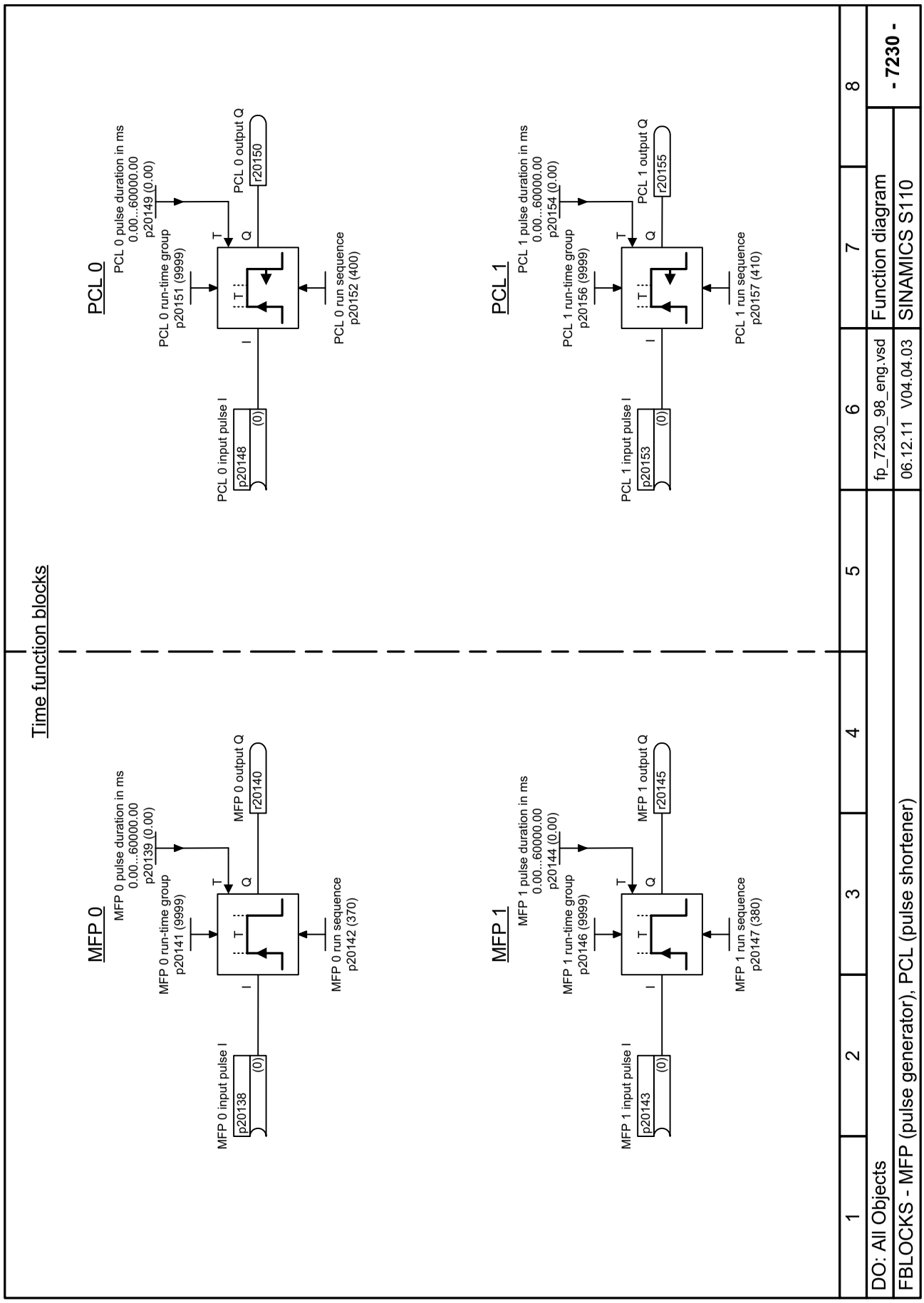

Fig. 3-155 7230 – MFP (pulse generator), PCL (pulse contractor)

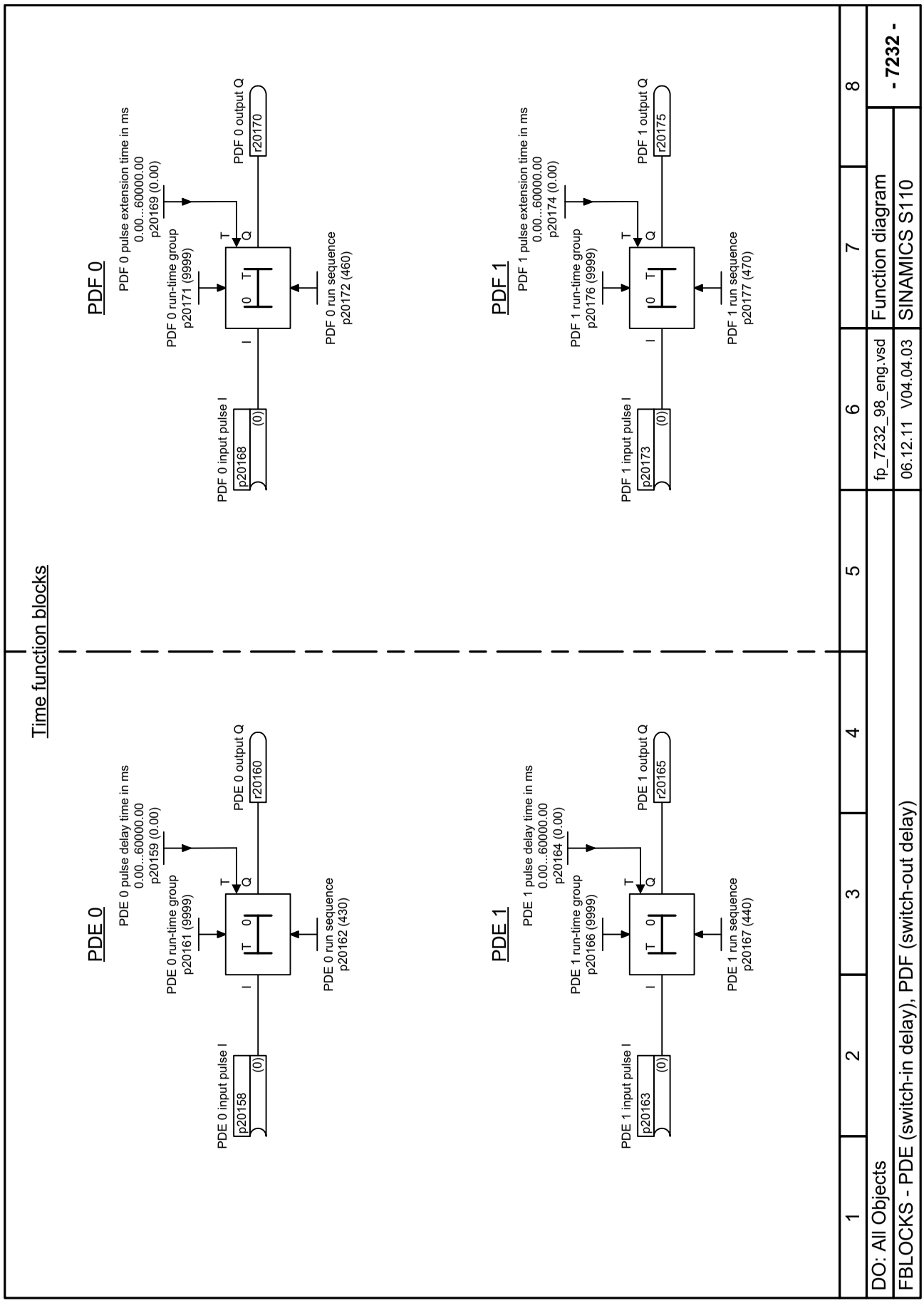

Fig. 3-156 7232 – PDE (ON delay), PDF (OFF delay)

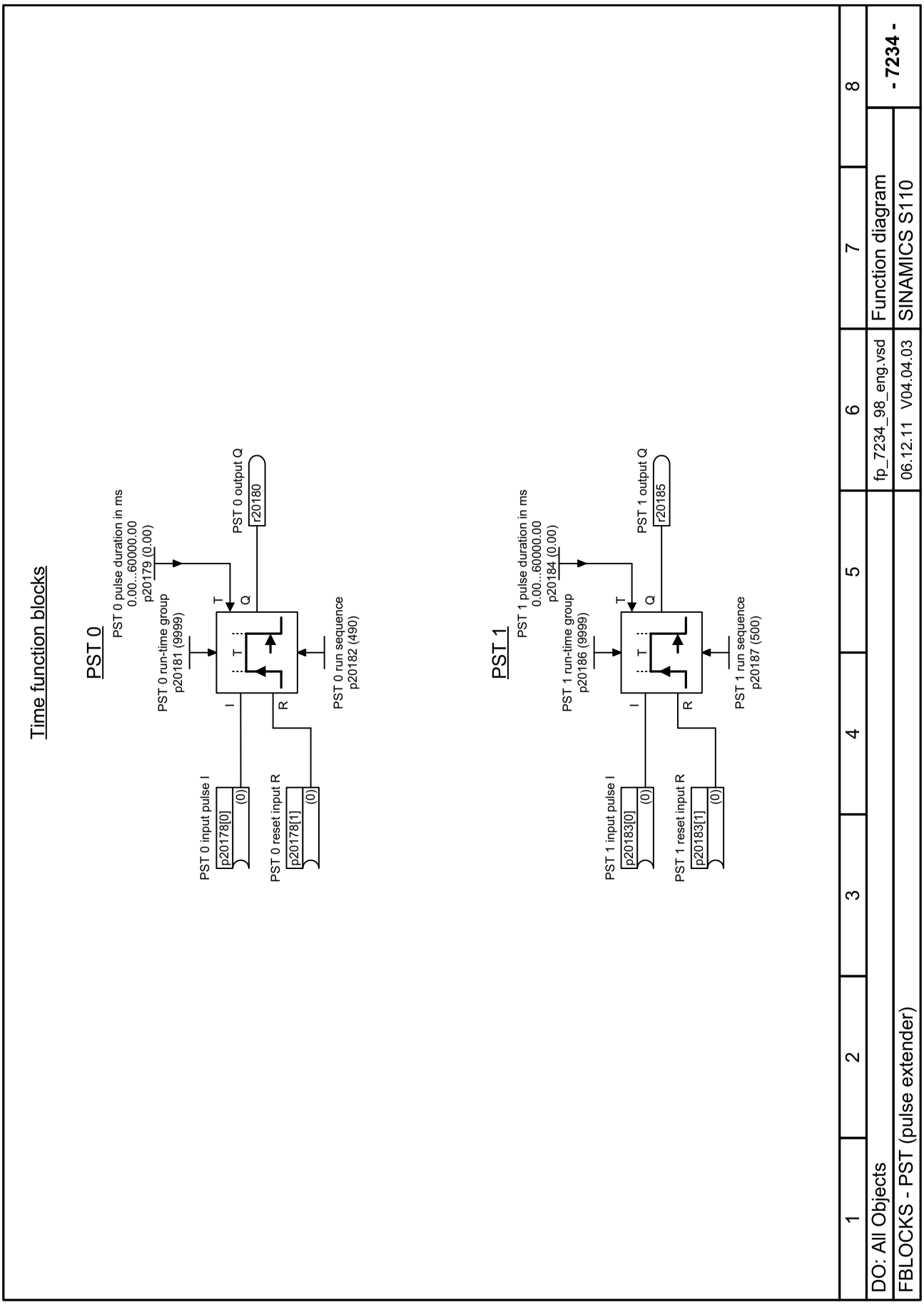

Fig. 3-157 7234 – PST (pulse stretcher)

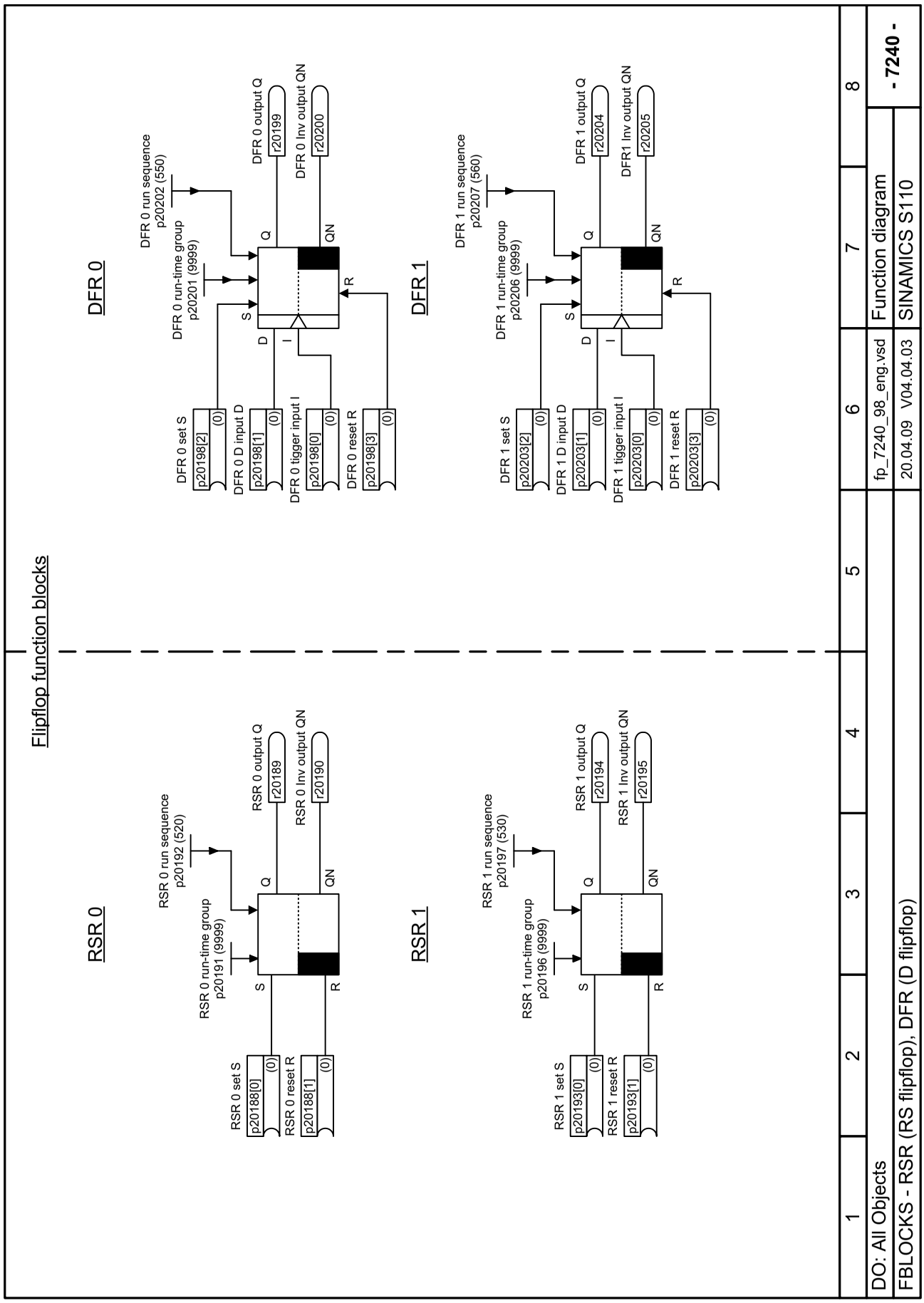

Fig. 3-158 7240 – RSR (RS flip-flop), DFR (D flip-flop)

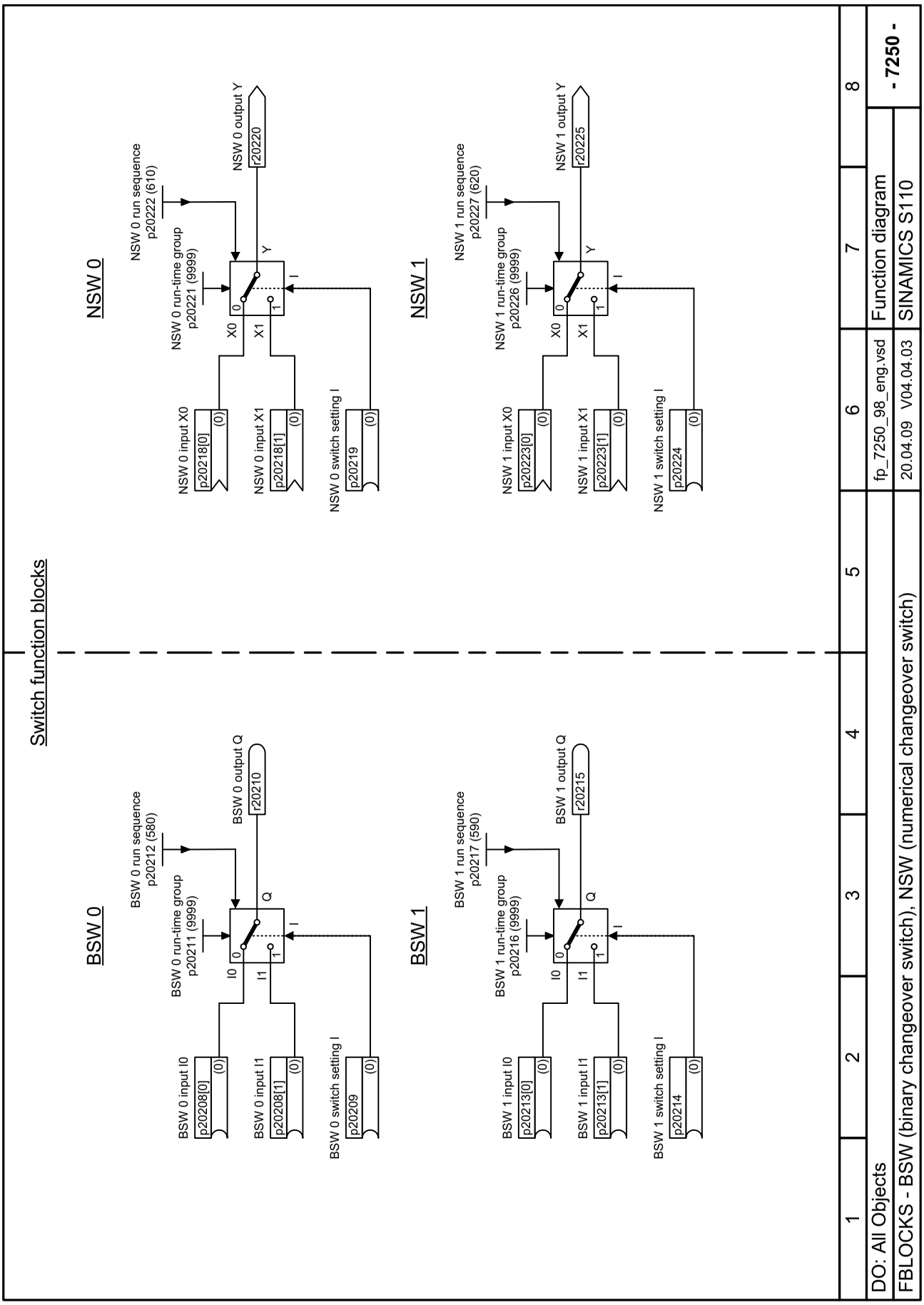

Fig. 3-159 7250 – BSW (binary switch), NSW (numeric switch)

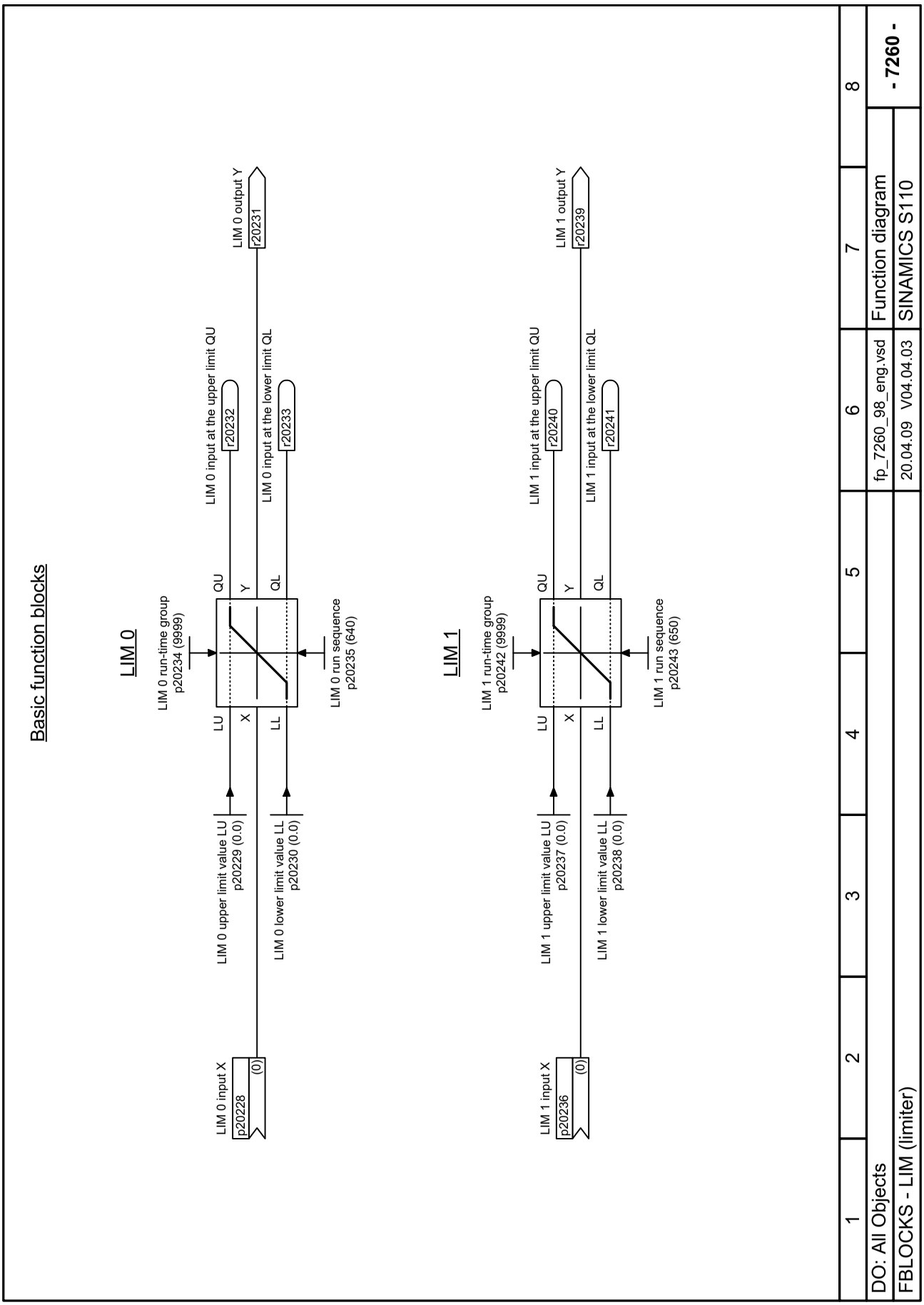

Fig. 3-160 7260 – LIM (limiter)

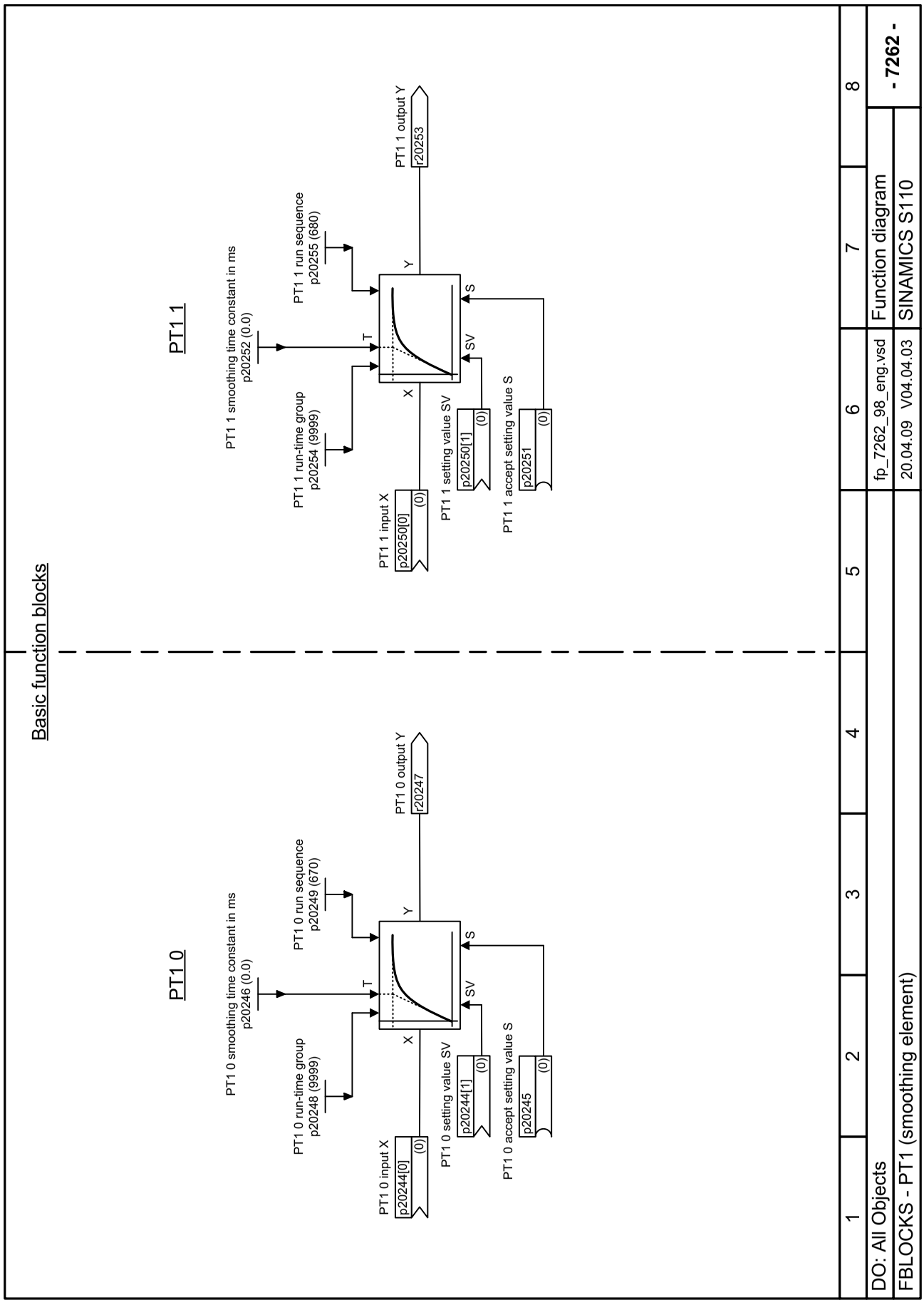

Fig. 3-161 7262 – PT1 (smoothing element)

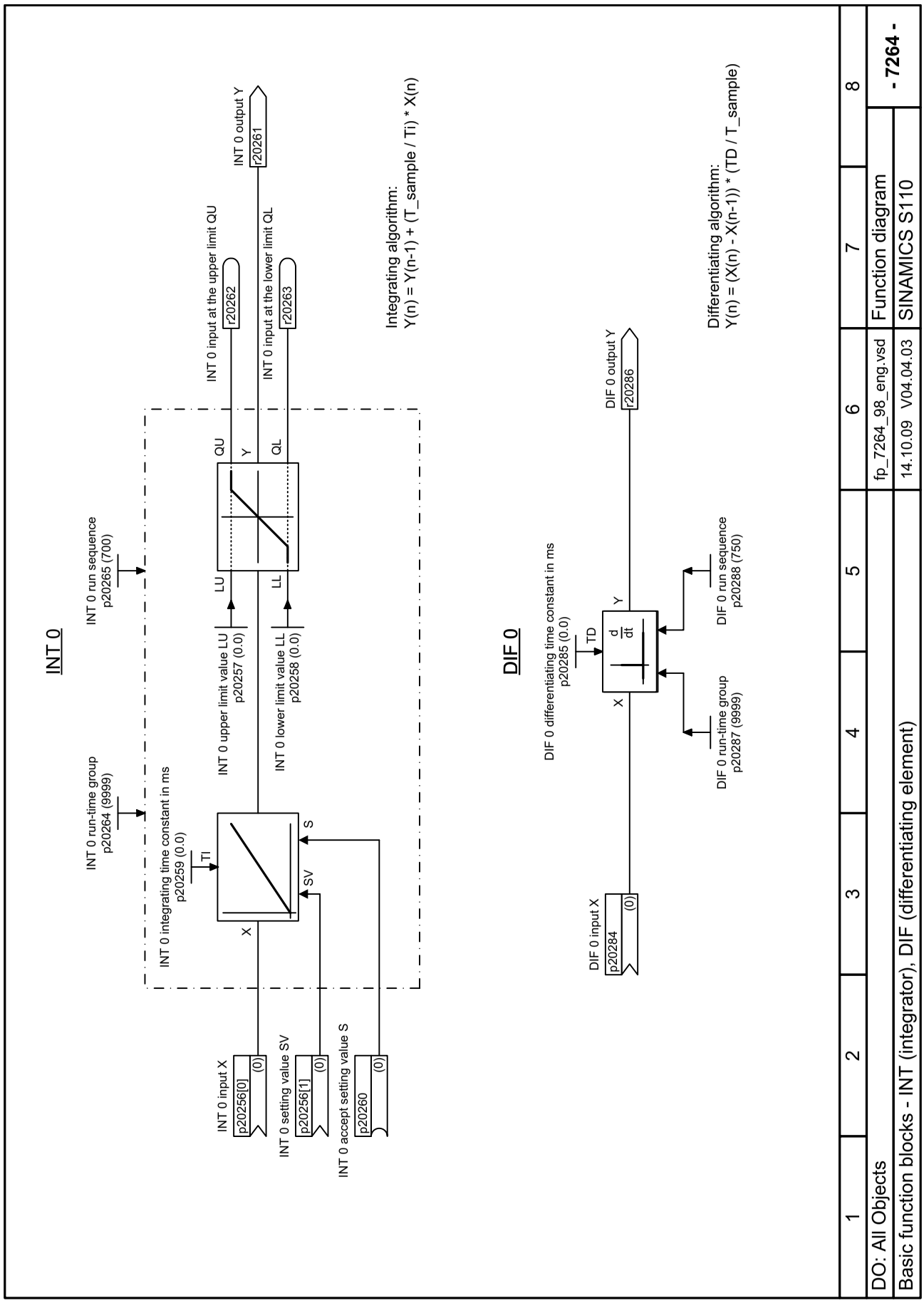

Fig. 3-162 7264 – INT (integrator), DIF (derivative-action element)

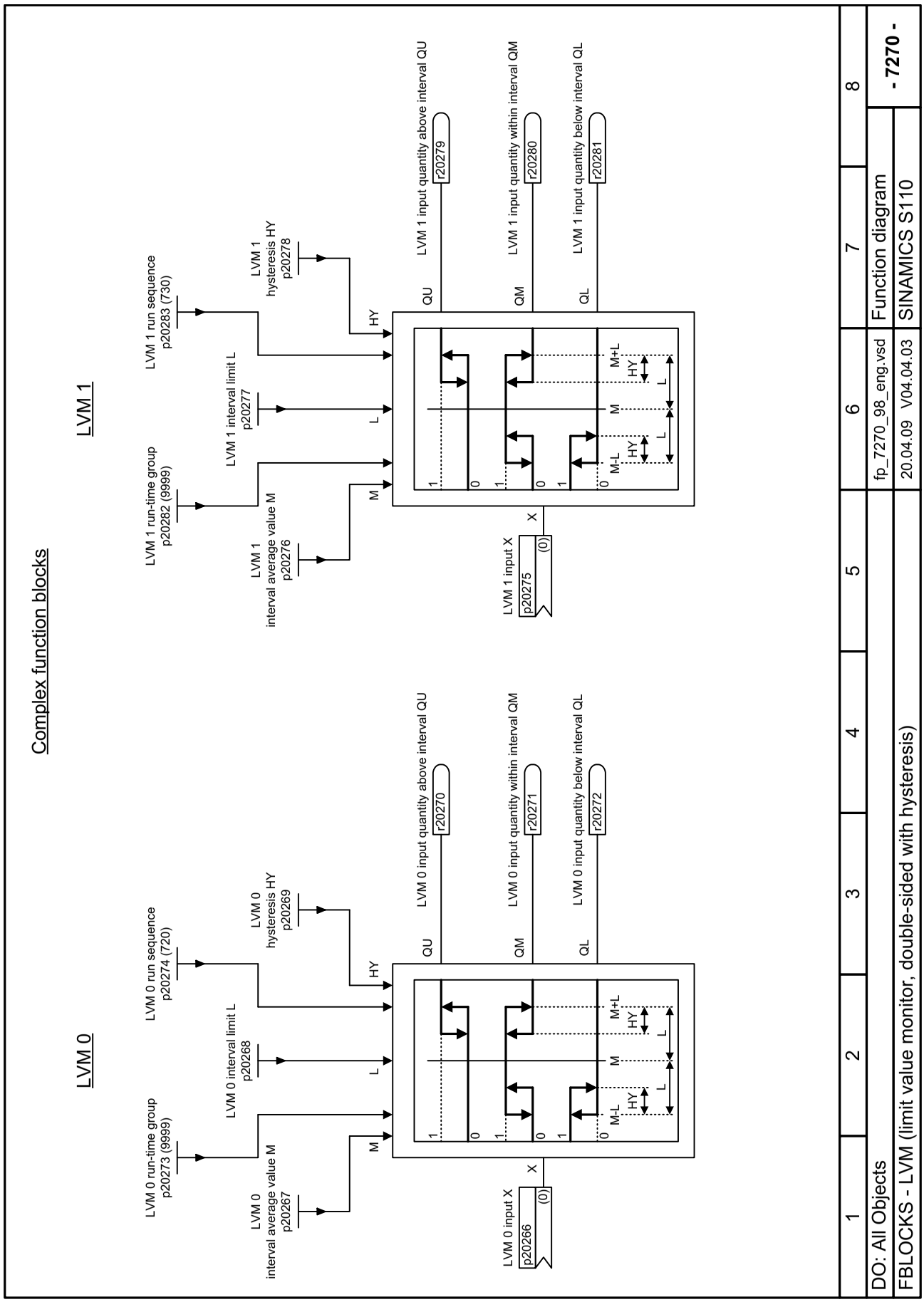

Fig. 3-163 7270 – LVM (double-sided limit monitor with hysteresis)

3.18 Technology controller

Function block diagrams

7950 – Fixed values (r0108.16 = 1 and p2216 = 2)	898
7951 – Fixed value selection direct (p2216 = 1)	899
7954 – Motorized potentiometer (r0108.16 = 1)	900
7958 – Closed-loop control (r0108.16 = 1)	901

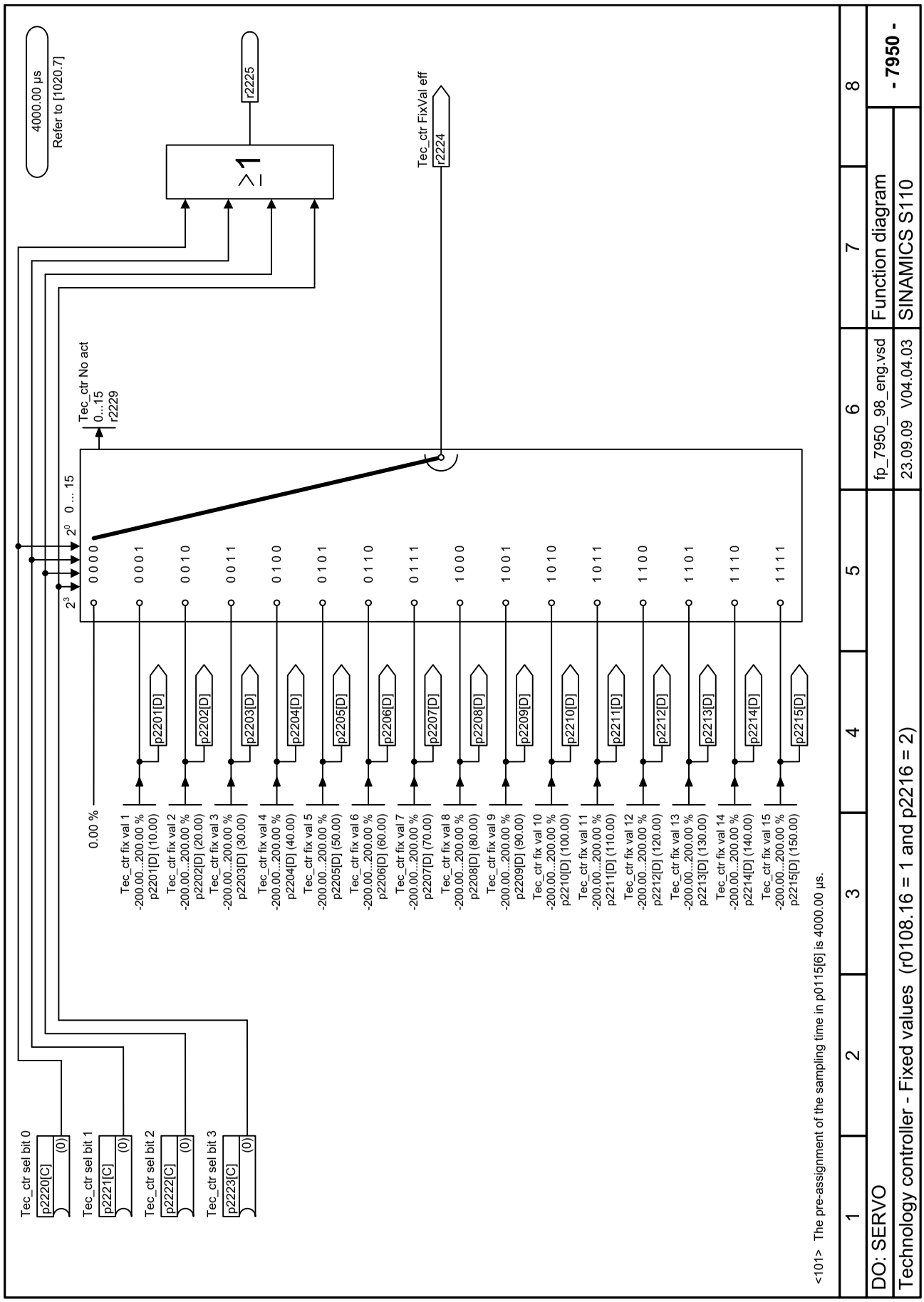

Fig. 3-164 7950 – Fixed values (r0108.16 = 1 and p2216 = 2)

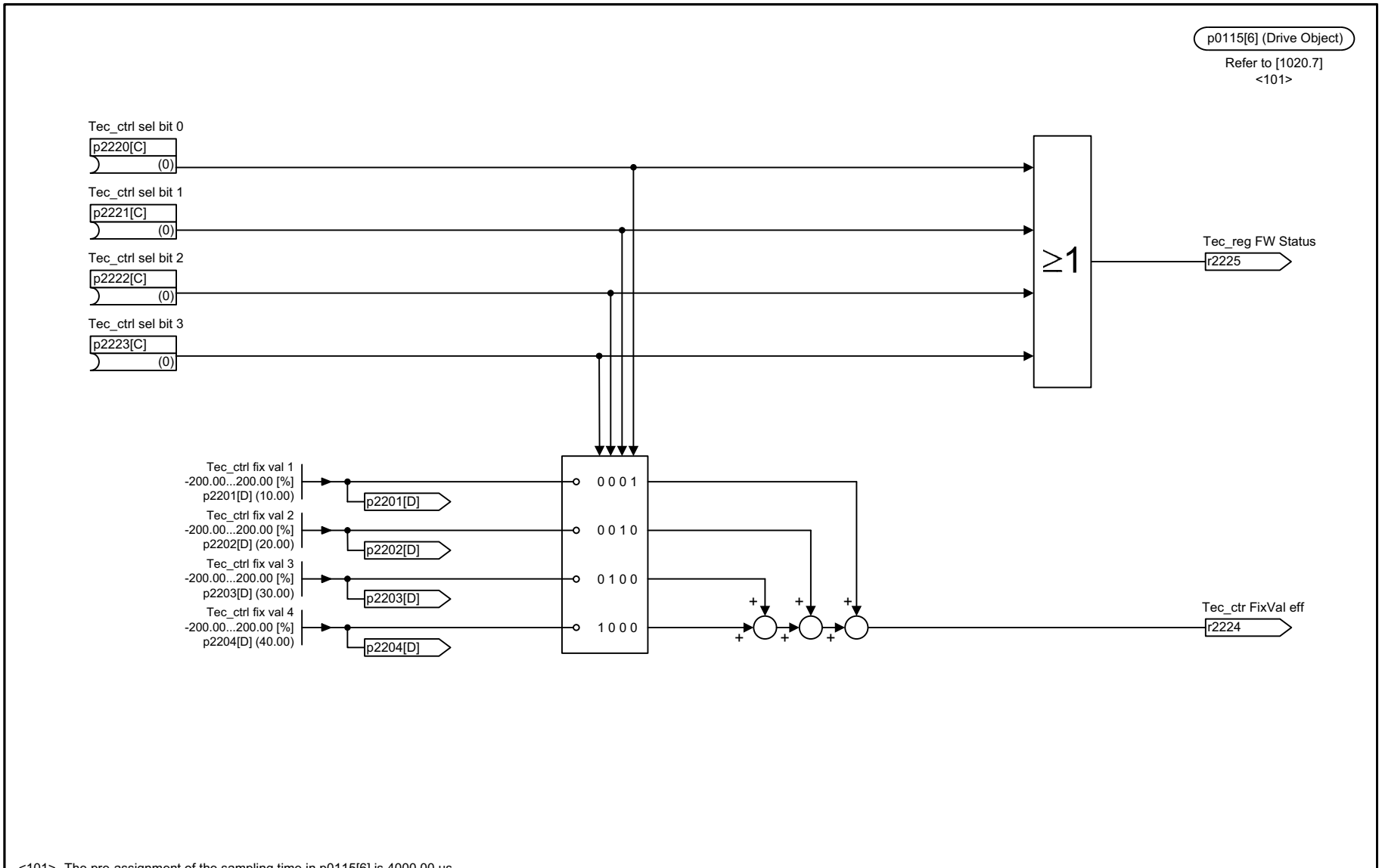

<101> The pre-assignment of the sampling time in p0115[6] is 4000.00 µs.

1	2	3	4	5	6	7	8
DO: SERVO					fp_7951_98_eng.vsd	Function diagram	- 7951 -
Technology controller - Fixed value selection direct (p2216 = 1)					23.09.09 V04.04.03	SINAMICS S110	

Fig. 3-165 7951 – Fixed value selection direct (p2216 = 1)

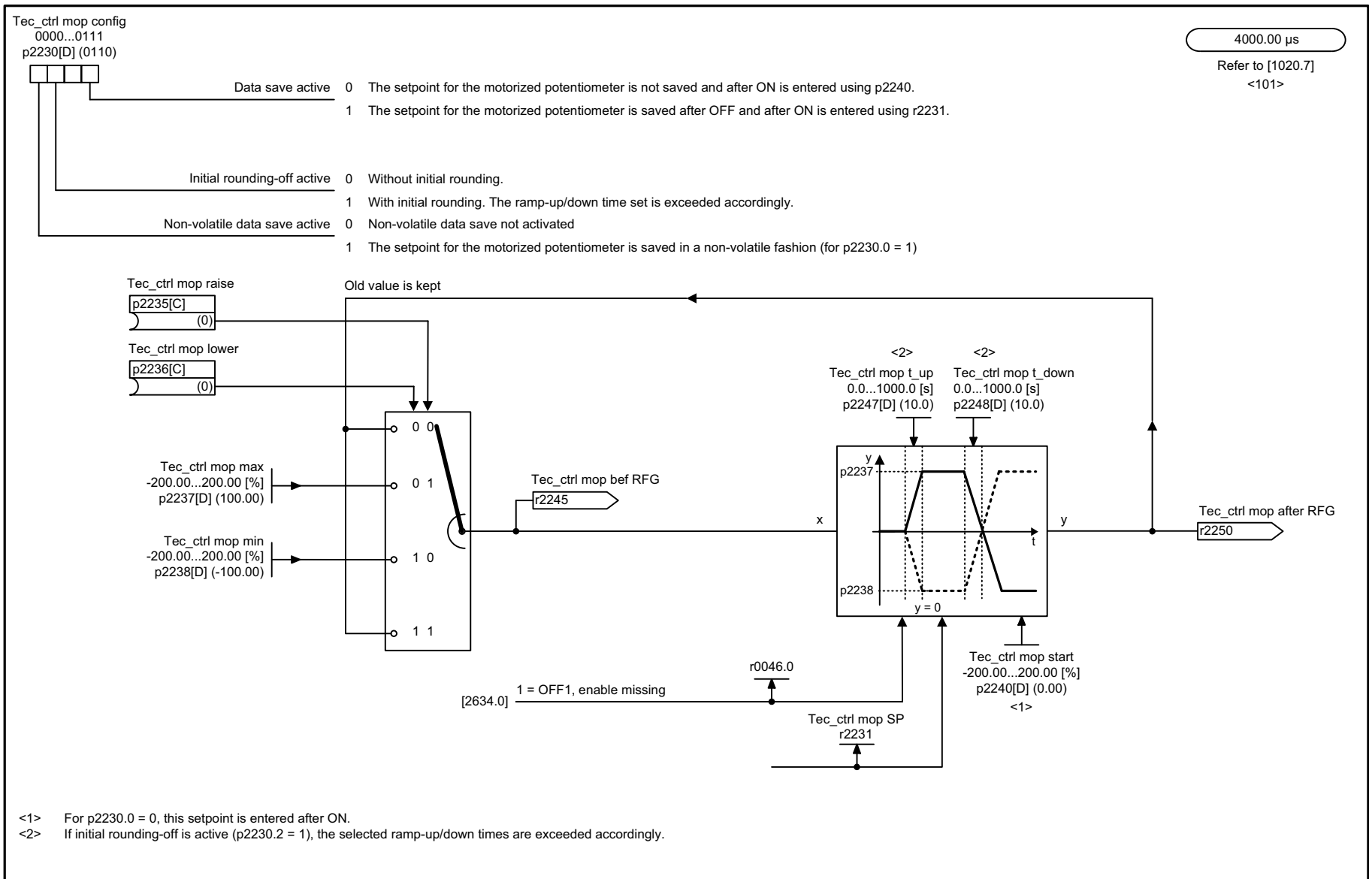

<1> For p2230.0 = 0, this setpoint is entered after ON.
<2> If initial rounding-off is active (p2230.2 = 1), the selected ramp-up/down times are exceeded accordingly.

1	2	3	4	5	6	7	8
DO: SERVO					fp_7954_98_eng.vsd	Function diagram	- 7954 -
Technology controller - Motorized potentiometer (r0108.16 = 1)					21.08.08 V04.04.03	SINAMICS S110	

Fig. 3-166 7954 – Motorized potentiometer (r0108.16 = 1)

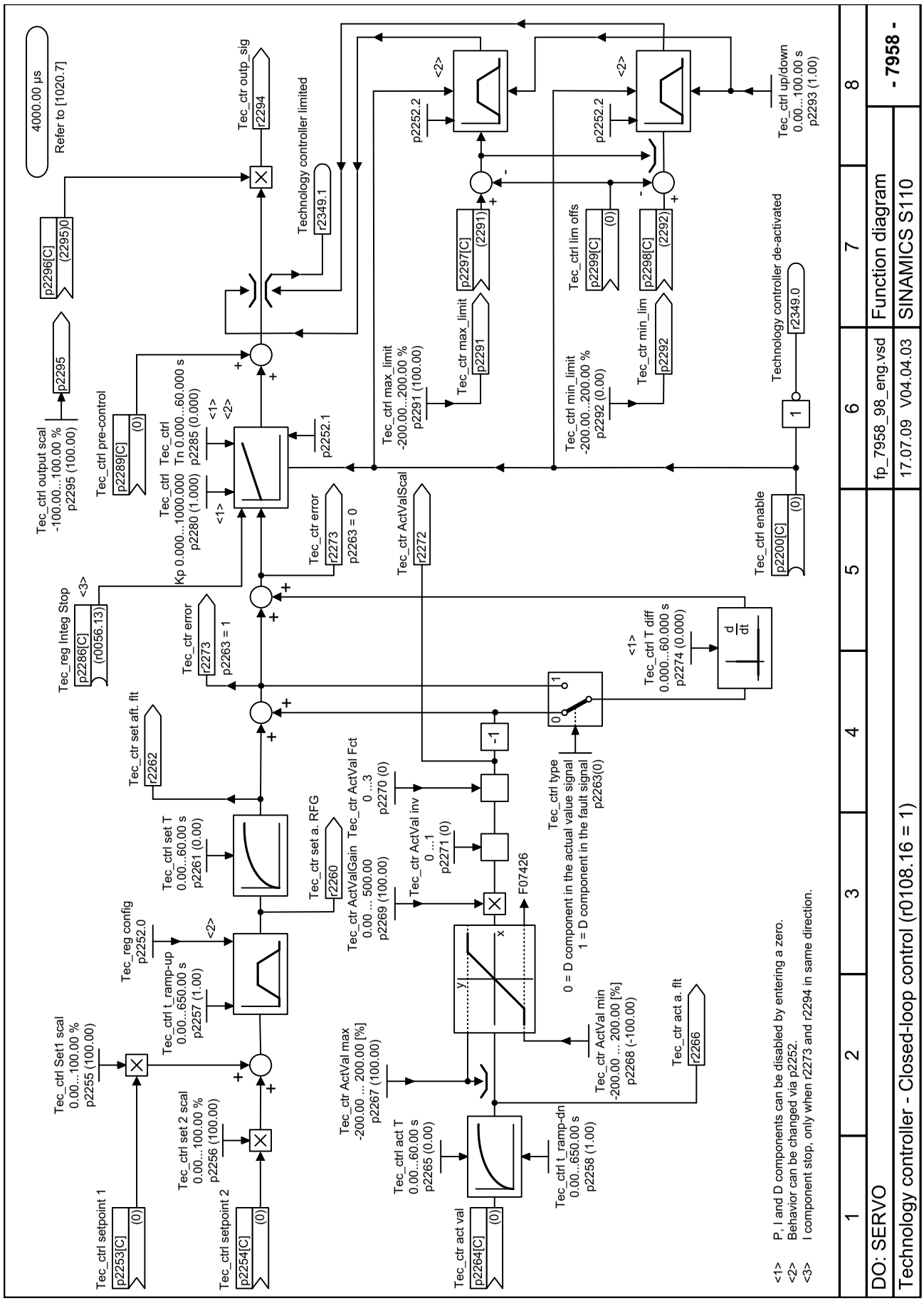

Fig. 3-167 7958 – Closed-loop control (r0108.16 = 1)

3.19 Signals and monitoring functions

Function block diagrams

8010 – Speed signals 1	903
8011 – Speed signals 2	904
8012 – Torque signals, motor blocked/stalled	905
8014 – Thermal monitoring, power unit	906
8016 – Thermal monitoring, motor	907

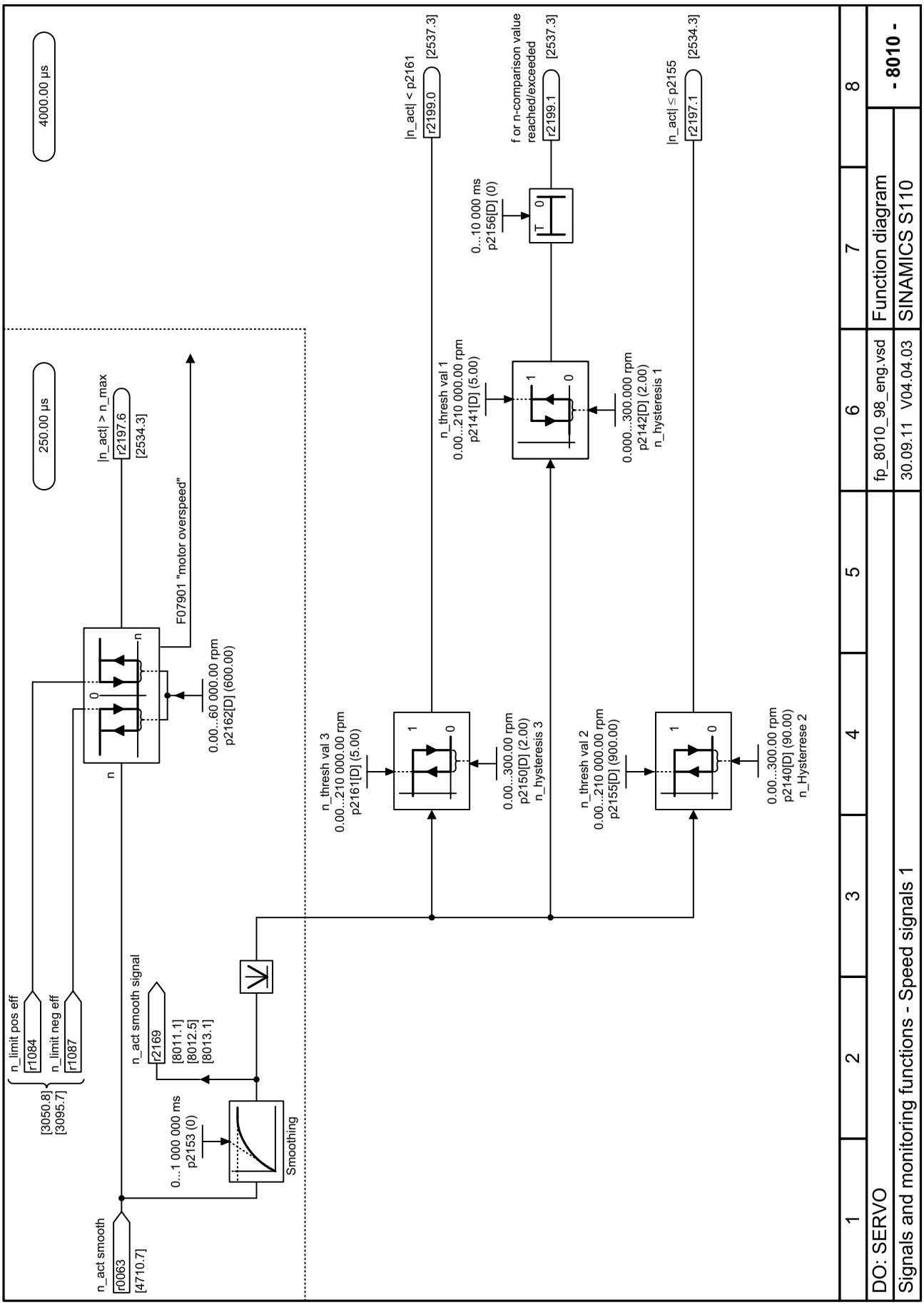

Fig. 3-168 8010 – Speed signals 1

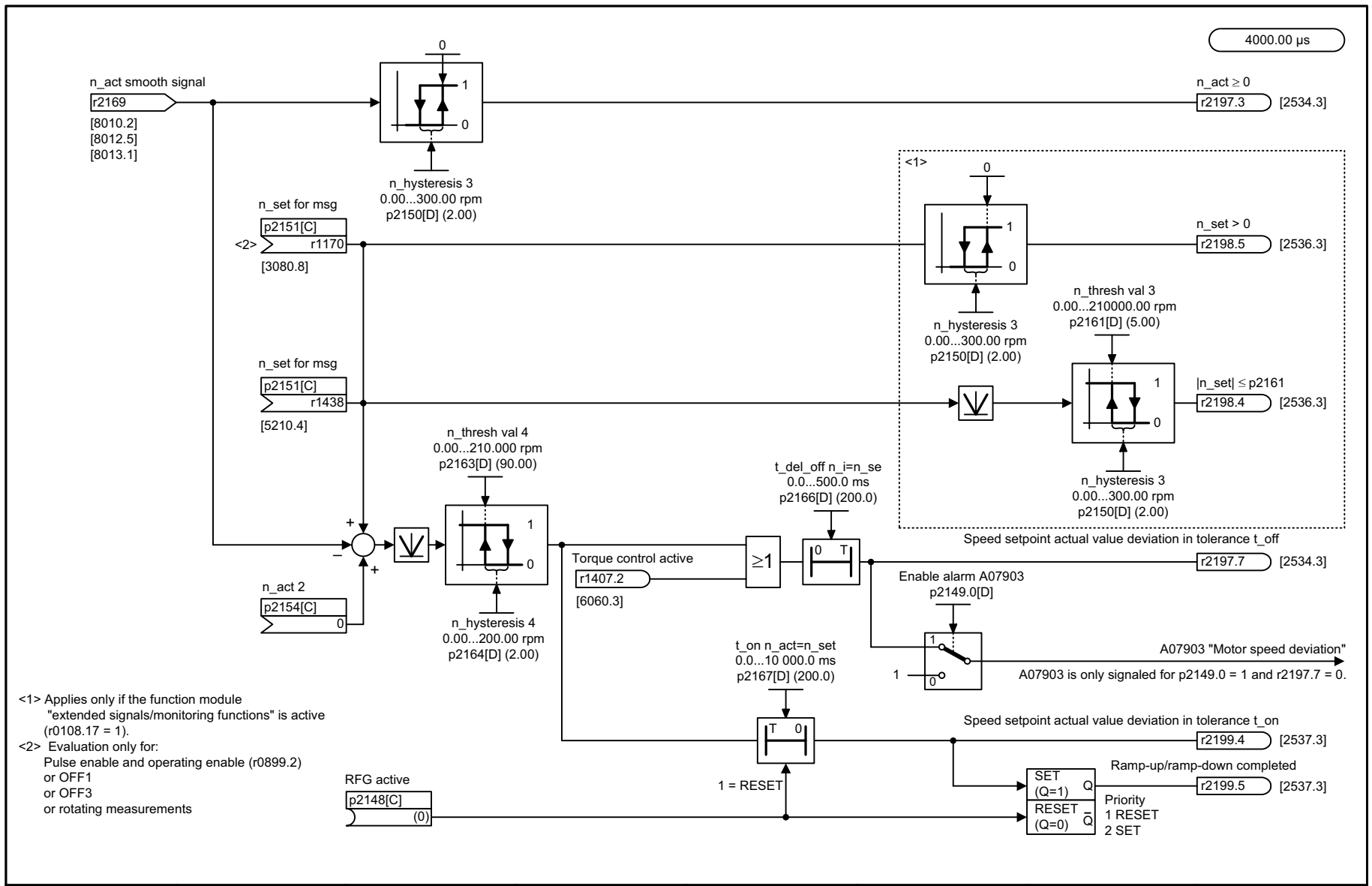

1	2	3	4	5	6	7	8
DO: SERVO					fp_8011_98_eng.vsd	Function diagram	- 8011 -
Signals and monitoring functions - Speed signals 2					21.10.14 V04.04.03	SINAMICS S110	

Fig. 3-169 8011 – Speed signals 2

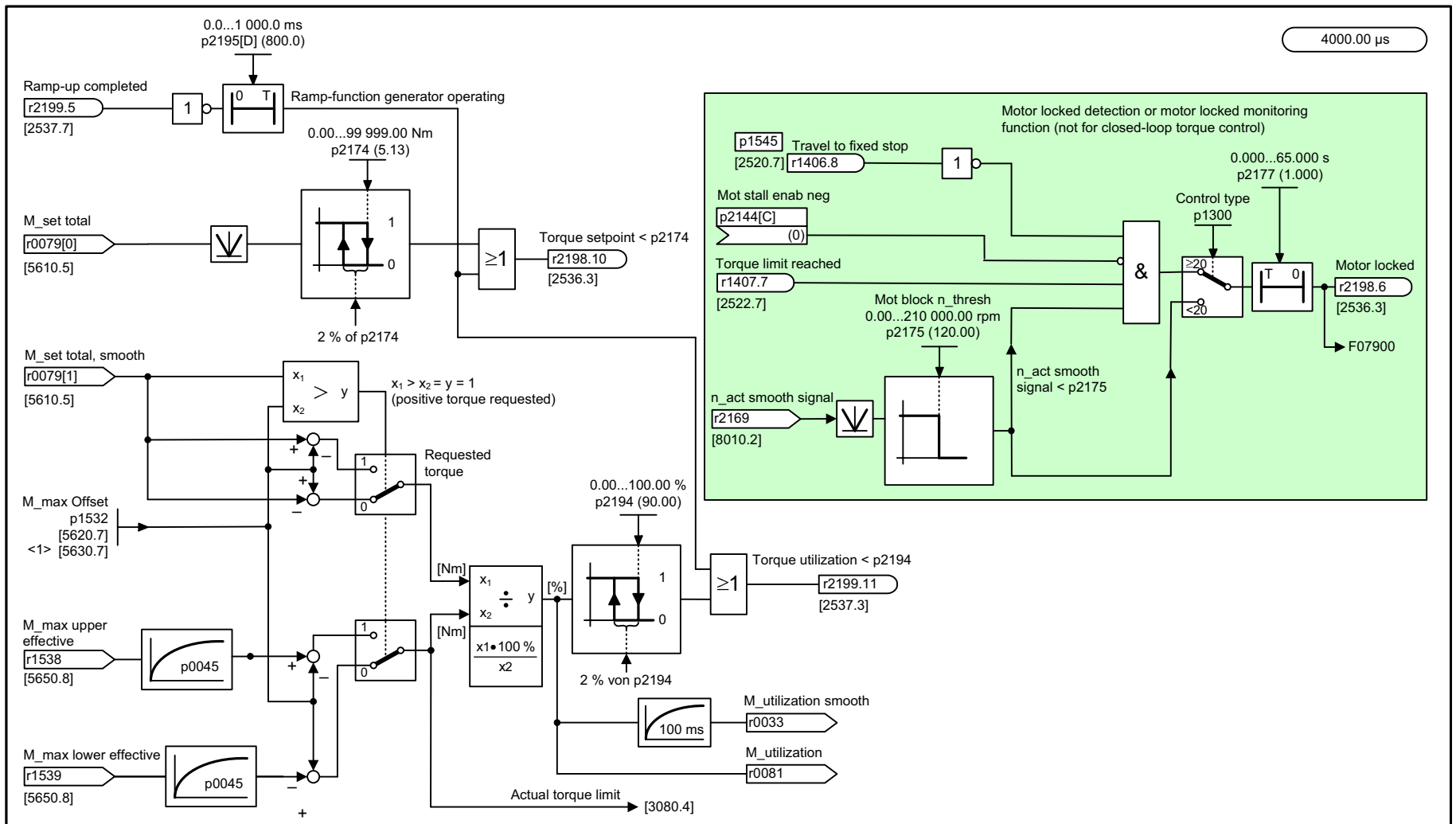

<1> The torque setpoint and the torque limits are determined by p1532 (M_max offset). As a rule, M_max offset = 0.

Fig. 3-170 8012 – Torque signals, motor blocked/stalled

1	2	3	4	5	6	7	8
DO: SERVO					fp_8012_98_eng.vsd	Function diagram	- 8012 -
Signals and monitoring functions - Torque signals, motor locked/stalled					30.09.11 V04.04.03	SINAMICS S110	

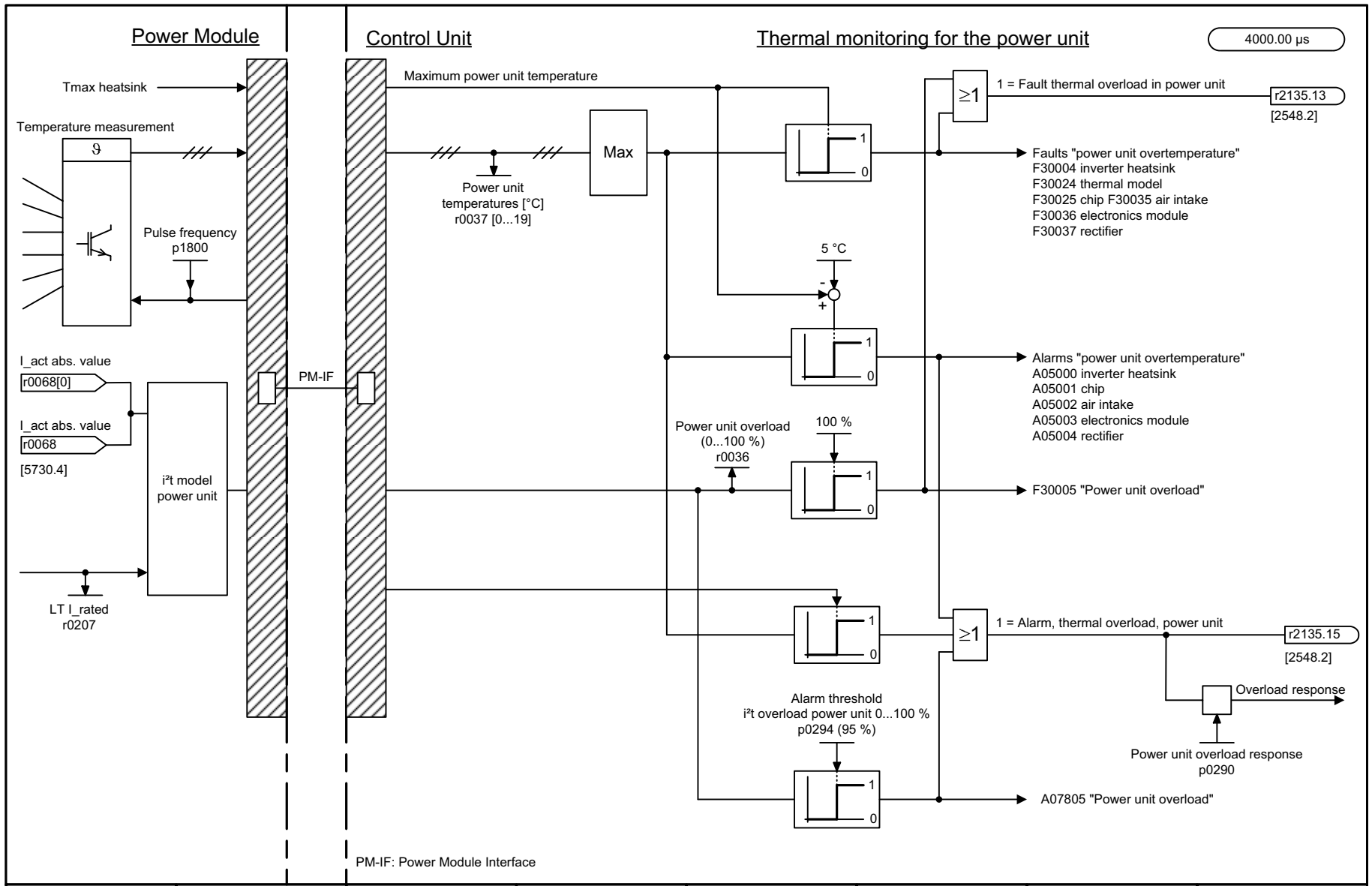

1	2	3	4	5	6	7	8
DO: SERVO					fp_8014_98_eng.vsd	Function diagram	- 8014 -
Signals and monitoring functions - Thermal monitoring, power unit					29.10.08 V04.04.03	SINAMICS S110	

Fig. 3-171 8014 – Thermal monitoring, power unit

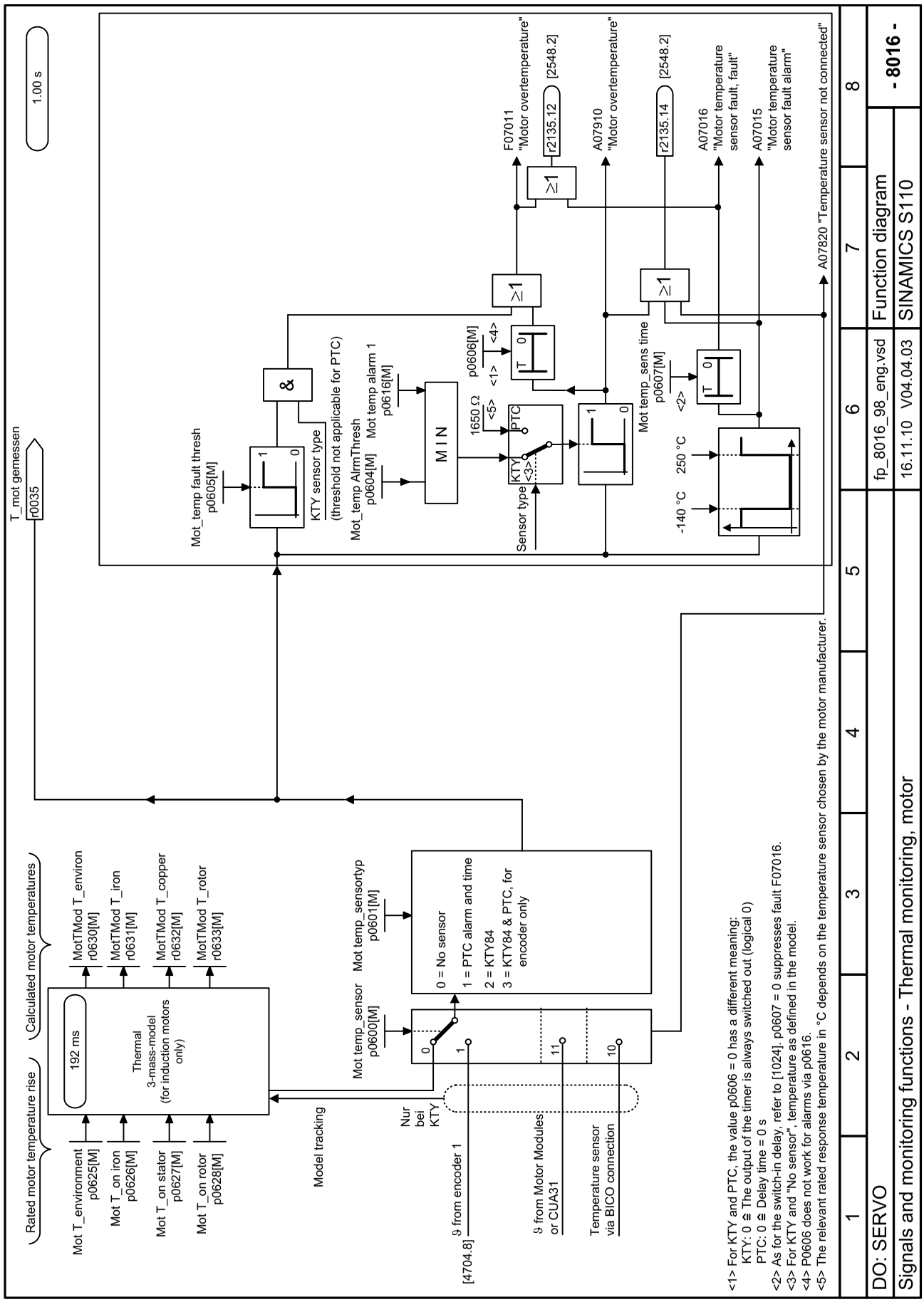

Fig. 3-172 8016 – Thermal monitoring, motor

3.20 Diagnostics

Function block diagrams

8060 – Fault buffer	909
8065 – Alarm buffer	910
8070 – Fault/alarm trigger word (r2129)	911
8075 – Fault/alarm configuration	912
8134 – Measuring sockets	913

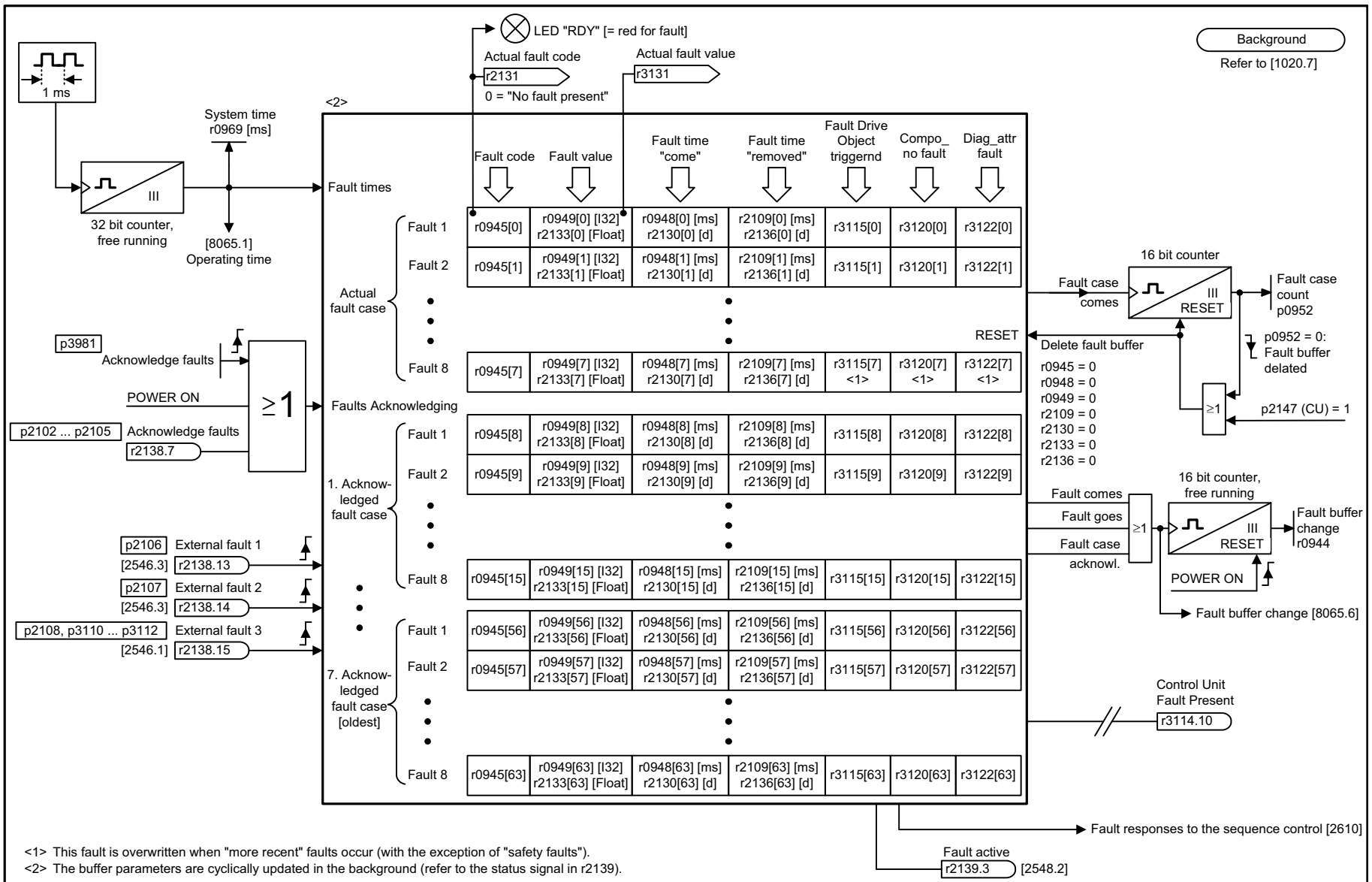

<1> This fault is overwritten when "more recent" faults occur (with the exception of "safety faults").
<2> The buffer parameters are cyclically updated in the background (refer to the status signal in r2139).

1	2	3	4	5	6	7	8
DO: All objects					fp_8060_98_eng.vsd	Function diagram	- 8060 -
Diagnostics - Fault buffer					18.10.10 V04.04.03	SINAMICS S110	

Fig. 3-173 8060 – Fault buffer

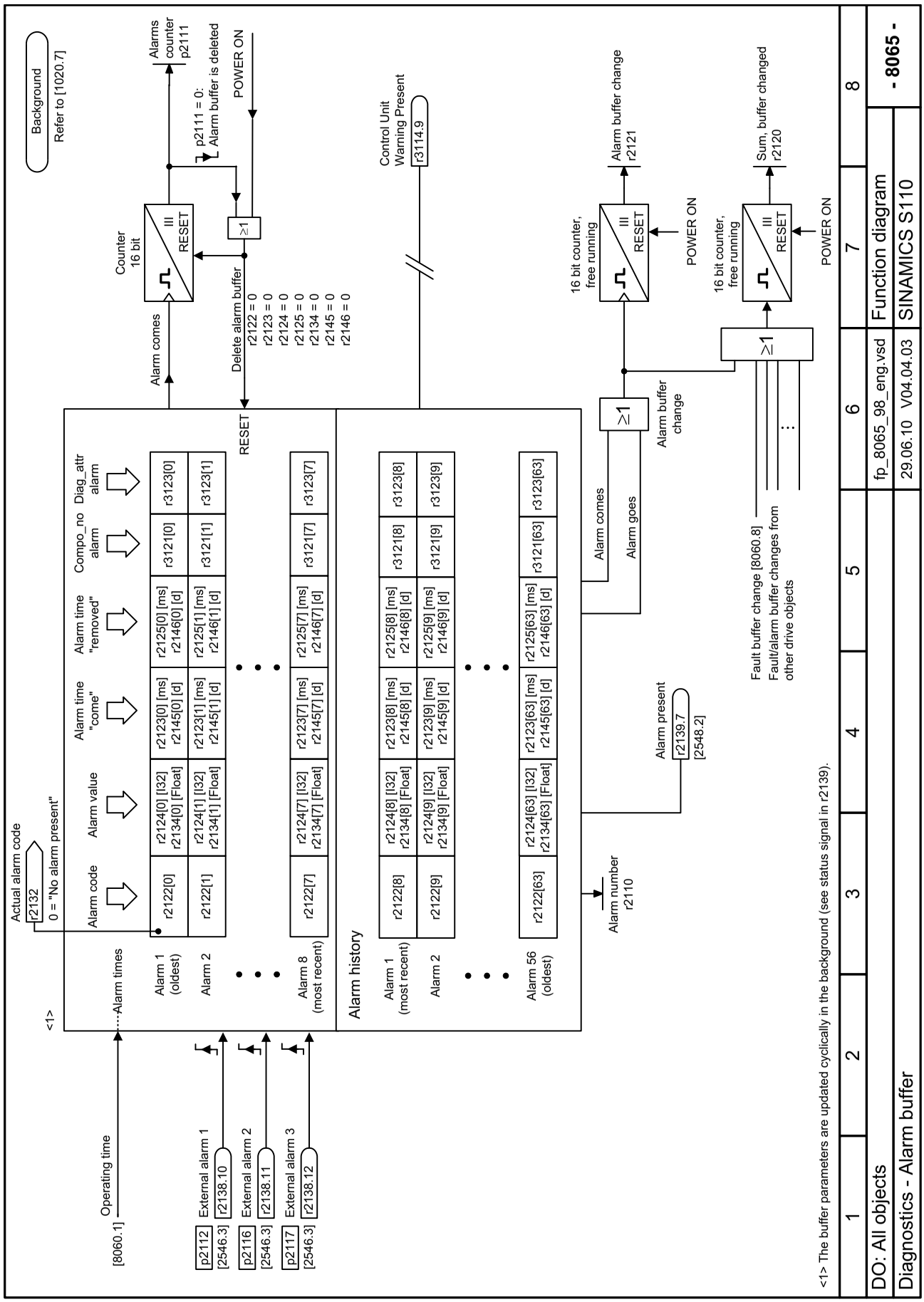

Fig. 3-174 8065 – Alarm buffer

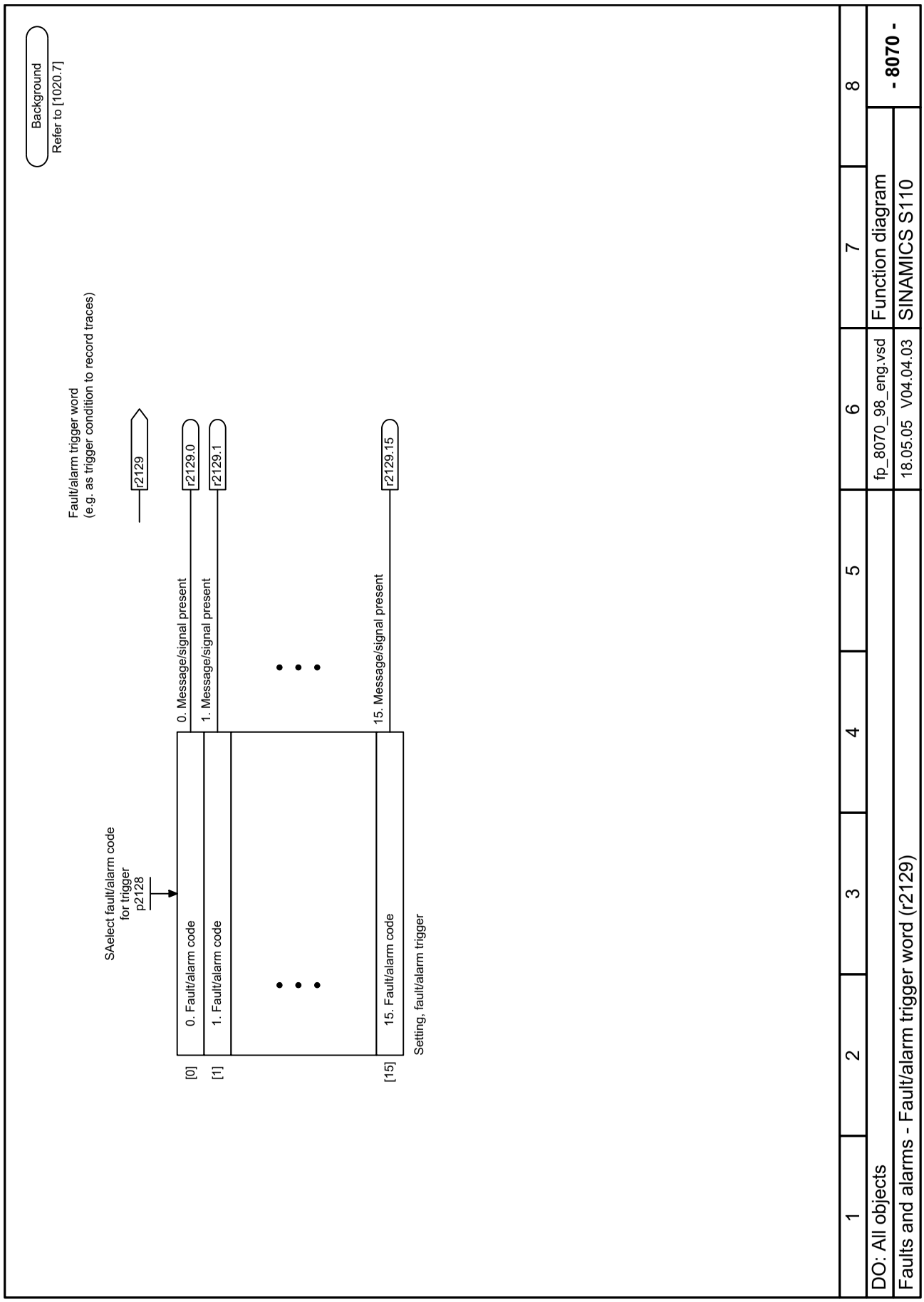

Fig. 3-175 8070 – Fault/alarm trigger word (r2129)

Background

Refer to [1020.7]

Changing the fault response for maximum 20 faults <1>

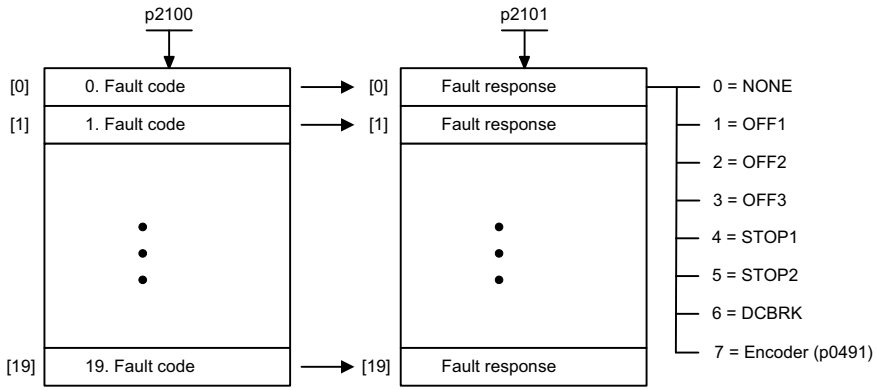

Changing the message type - fault <==> alarm for maximum 20 faults/alarms <1>

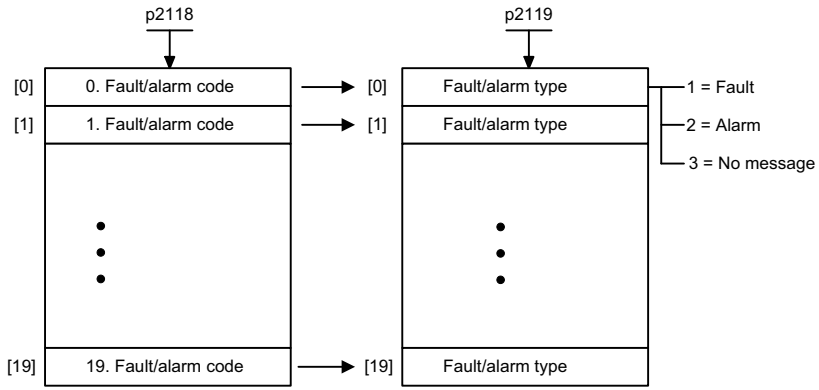

Changing the acknowledge mode for maximum 20 faults <1>

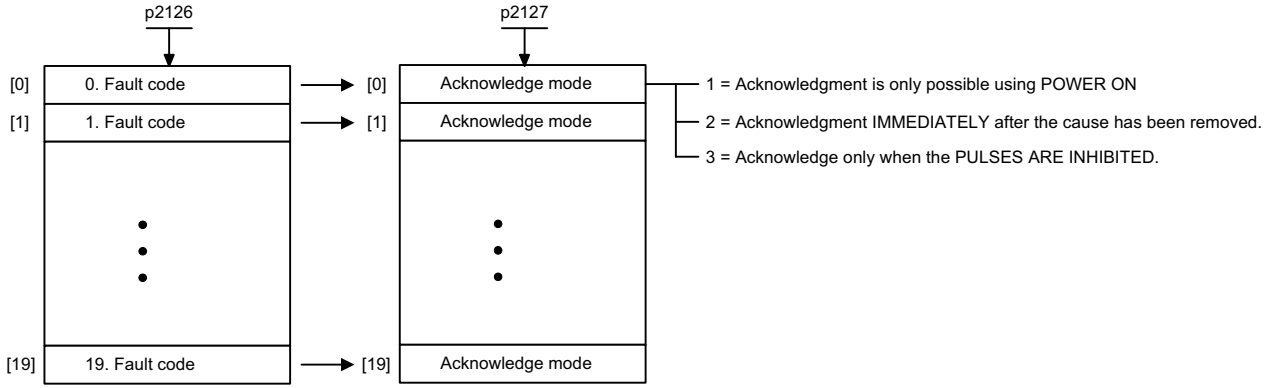

<1> The fault response, acknowledge mode and message type for all faults and alarms are set to meaningful default values in the factory setting.
Changes that may be required are only possible in specific value ranges specified by SIEMENS.
When the message type is changed, the supplementary information is tranferred from fault value r0949 to alarm value r2124 and vice versa.

1	2	3	4	5	6	7	8
DO: All objects					fp_8075_98_eng.vsd	Function diagram	- 8075 -
Faults and alarms - Fault/alarm configuration					12.04.12 V04.04.03	SINAMICS S110	

Fig. 3-176 8075 – Fault/alarm configuration

Fig. 3-177 8134 – Measuring sockets

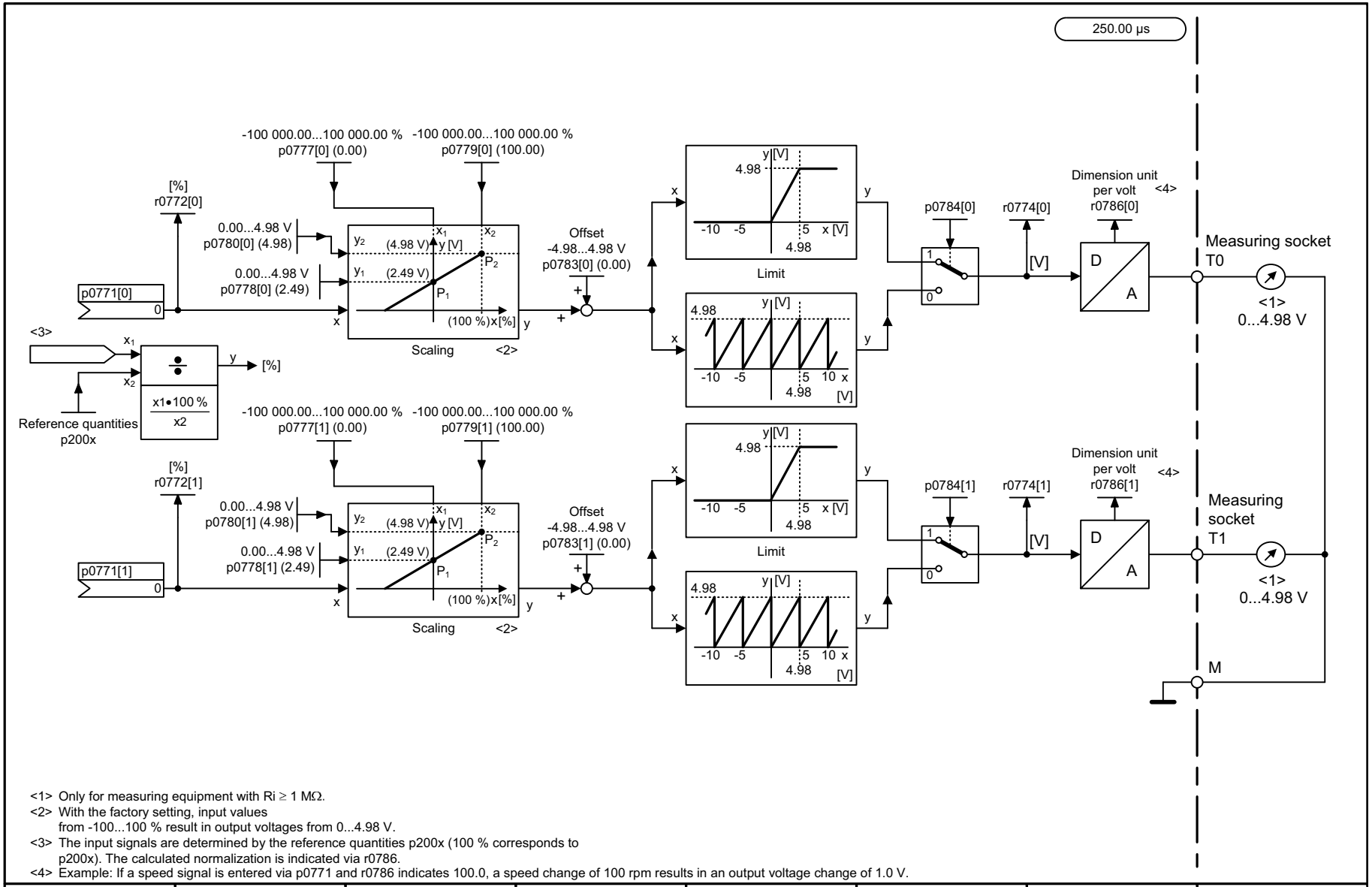

<1> Only for measuring equipment with Ri ≥ 1 MΩ.
<2> With the factory setting, input values from -100...100 % result in output voltages from 0...4.98 V.
<3> The input signals are determined by the reference quantities p200x (100 % corresponds to p200x). The calculated normalization is indicated via r0786.
<4> Example: If a speed signal is entered via p0771 and r0786 indicates 100.0, a speed change of 100 rpm results in an output voltage change of 1.0 V.

1	2	3	4	5	6	7	8
DO: CU_S110					fp_8134_98_eng.vsd	Function diagram	- 8134 -
Measuring sockets					30.09.11 V04.04.03	SINAMICS S110	

3.21 Data sets

Function block diagrams

8560 – Command Data Sets (CDS) 915
8565 – Drive Data Sets (DDS) 916
8570 – Encoder Data Sets (EDS) 917
8575 – Motor Data Sets (MDS) 918

Fig. 3-178 8560 – Command Data Sets (CDS)

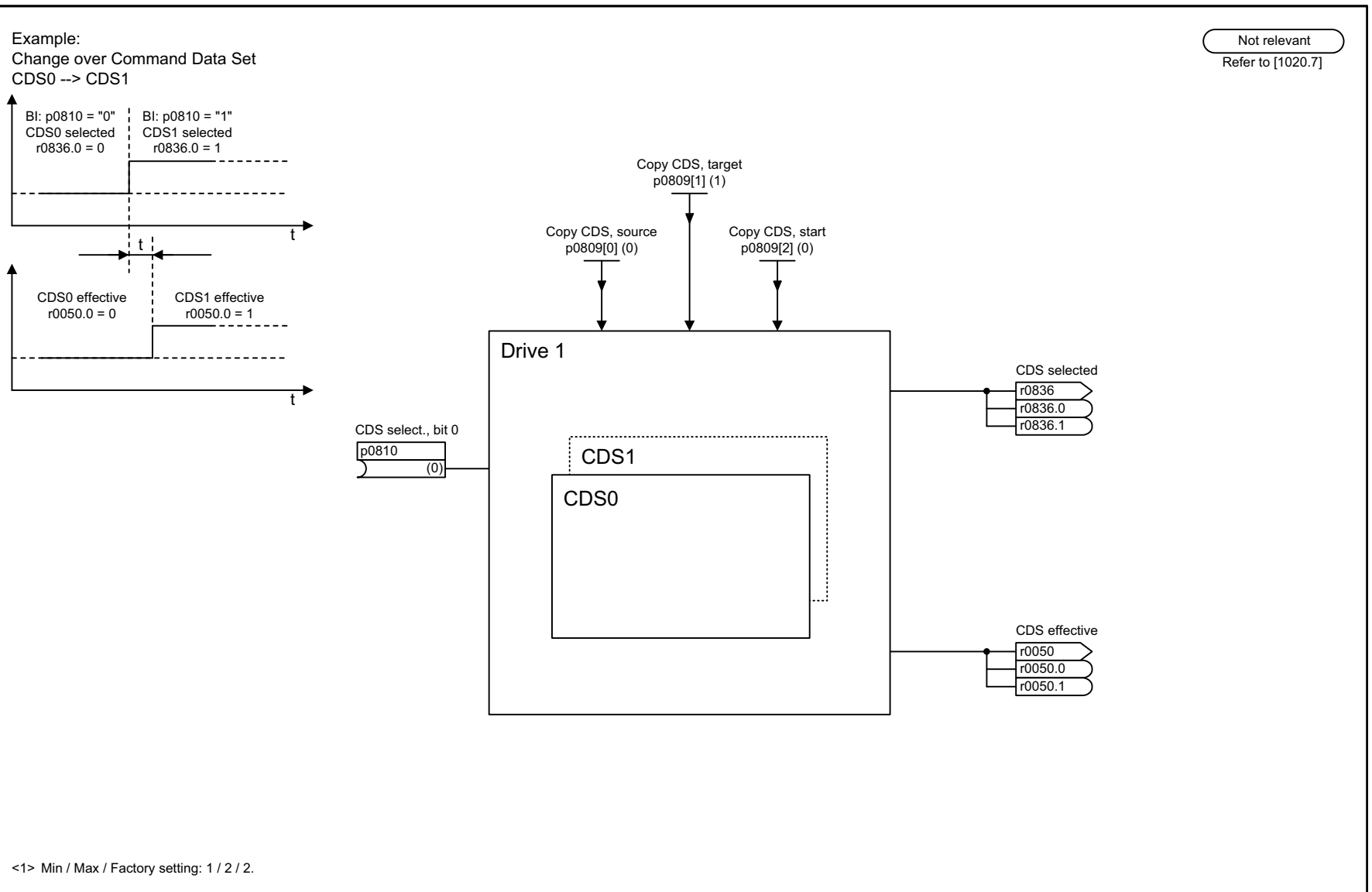

<1> Min / Max / Factory setting: 1 / 2 / 2.

1	2	3	4	5	6	7	8
DO: SERVO					fp_8560_98_eng.vsd	Function diagram	- 8560 -
Data sets - Command Data Sets (CDS)					16.06.08 V04.04.03	SINAMICS S110	

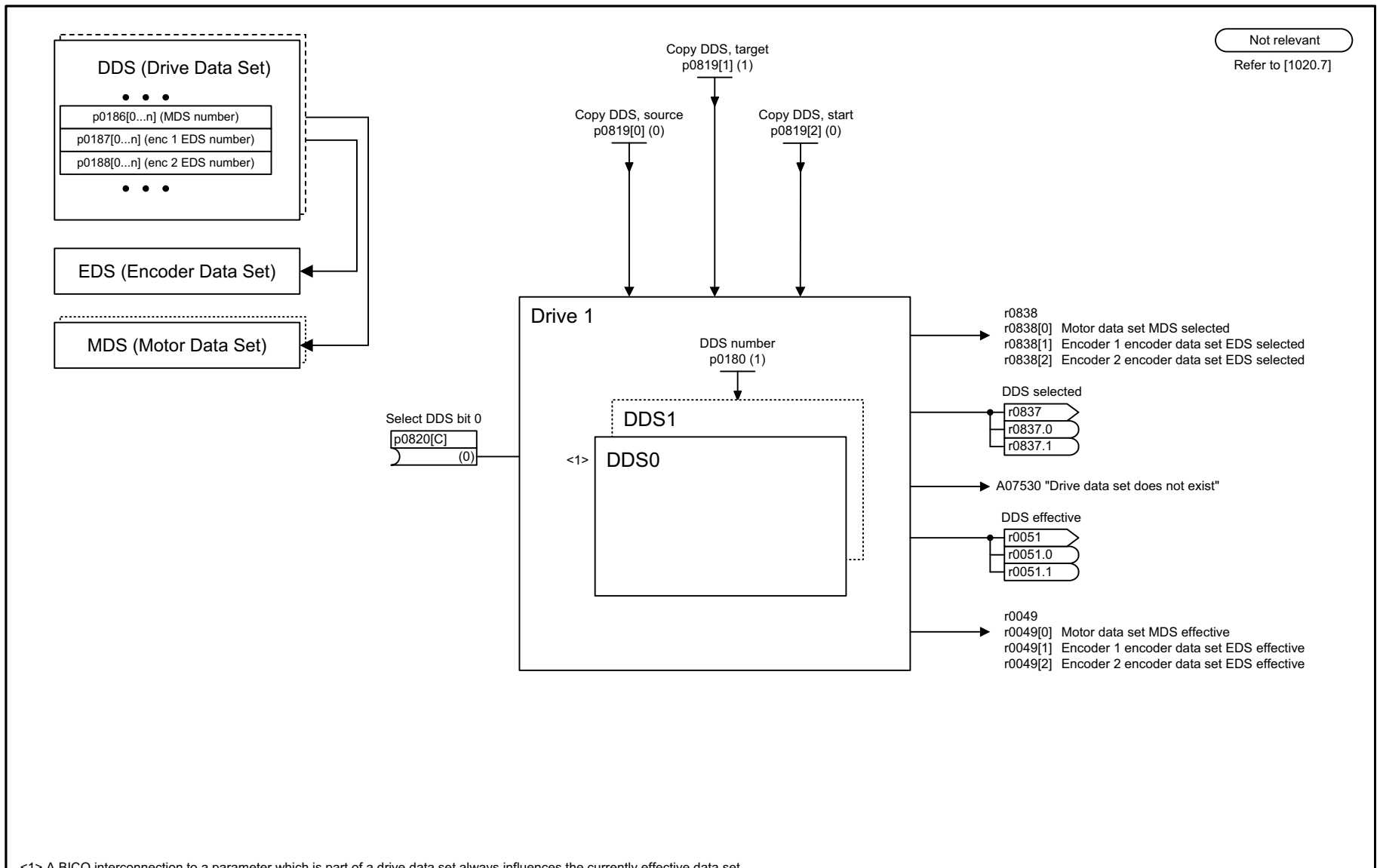

<1> A BICO interconnection to a parameter which is part of a drive data set always influences the currently effective data set.

1	2	3	4	5	6	7	8
DO: SERVO					fp_8565_98_eng.vsd	Function diagram	- 8565 -
Data sets - Drive Data Sets, DDS					07.11.11 V04.04.03	SINAMICS S110	

Fig. 3-179 8565 – Drive Data Sets (DDS)

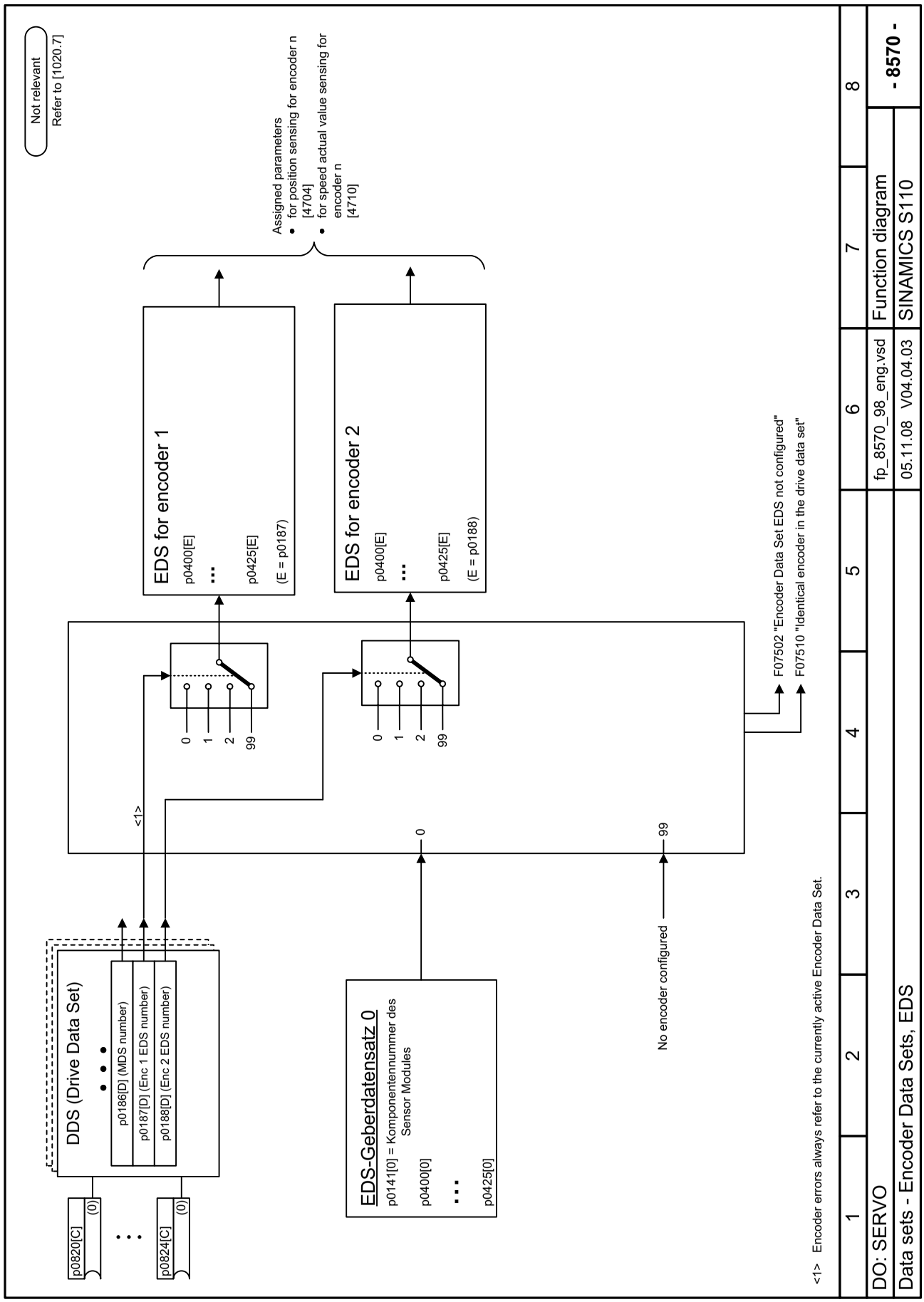

Fig. 3-180 8570 – Encoder Data Sets (EDS)

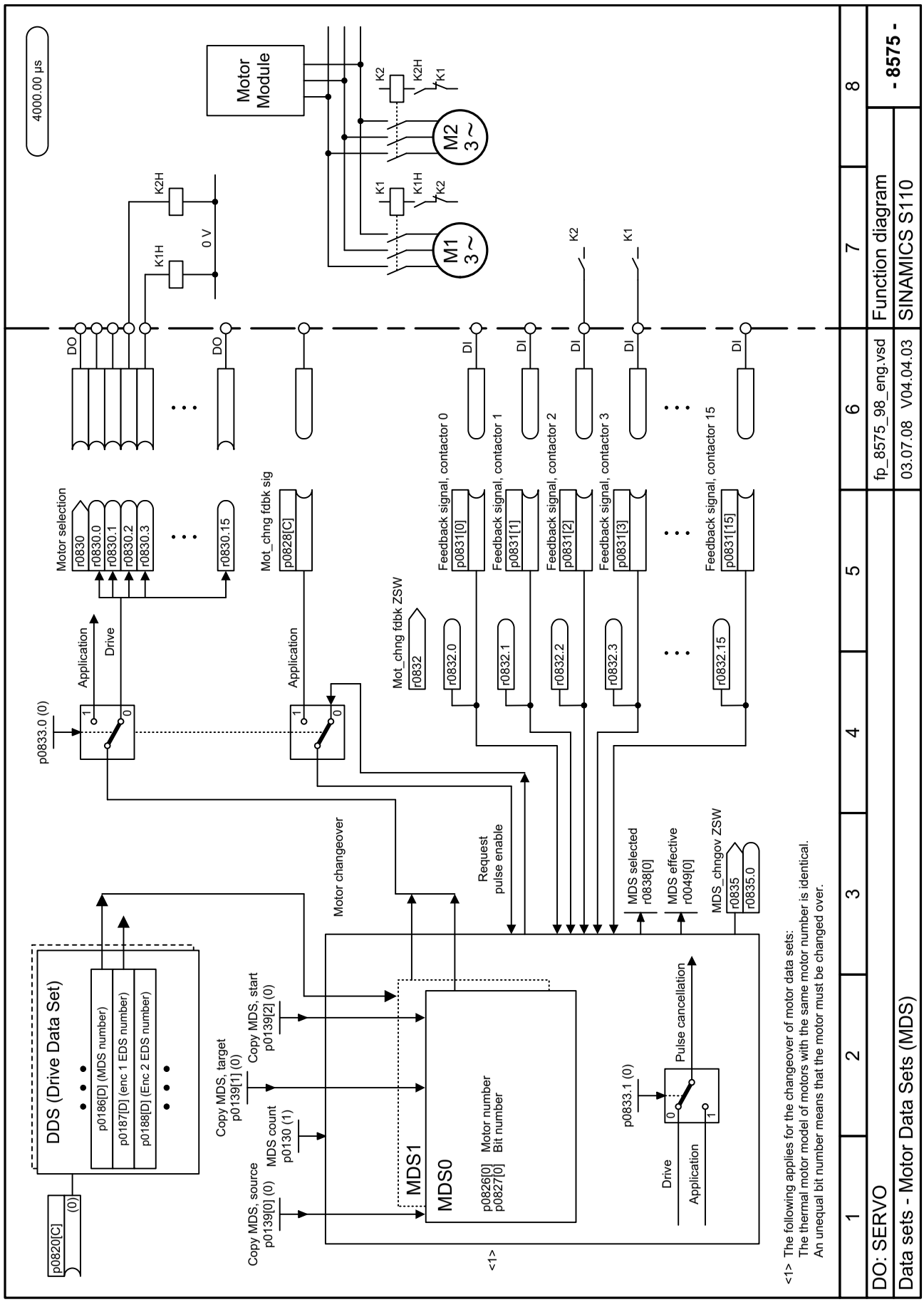

Fig. 3-181 8575 – Motor Data Sets (MDS)

3.22 CANopen interface

Function block diagrams

9204 – Receive telegram, free PDO mapping (p8744 = 2)	920
9206 – Receive telegram, Predefined Connection Set (p8744 = 1)	921
9208 – Send telegram, free PDO mapping (p8744 = 2)	922
9210 – Send telegram, Predefined Connection Set (p8744 = 1)	923
9220 – Control word, CANopen	924
9226 – Status word, CANopen	925

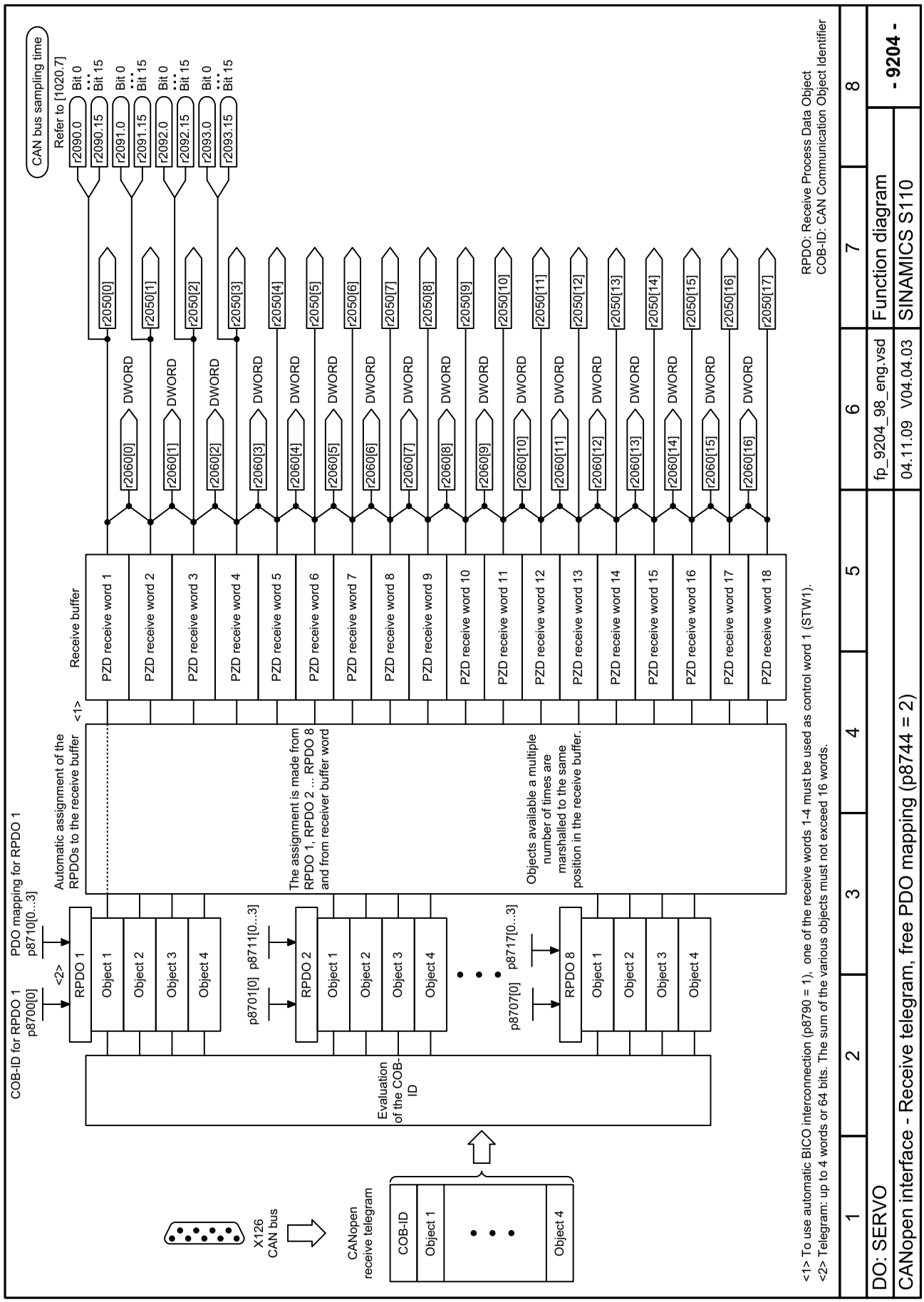

Fig. 3-182 9204 – Receive telegram, free PDO mapping (p8744 = 2)

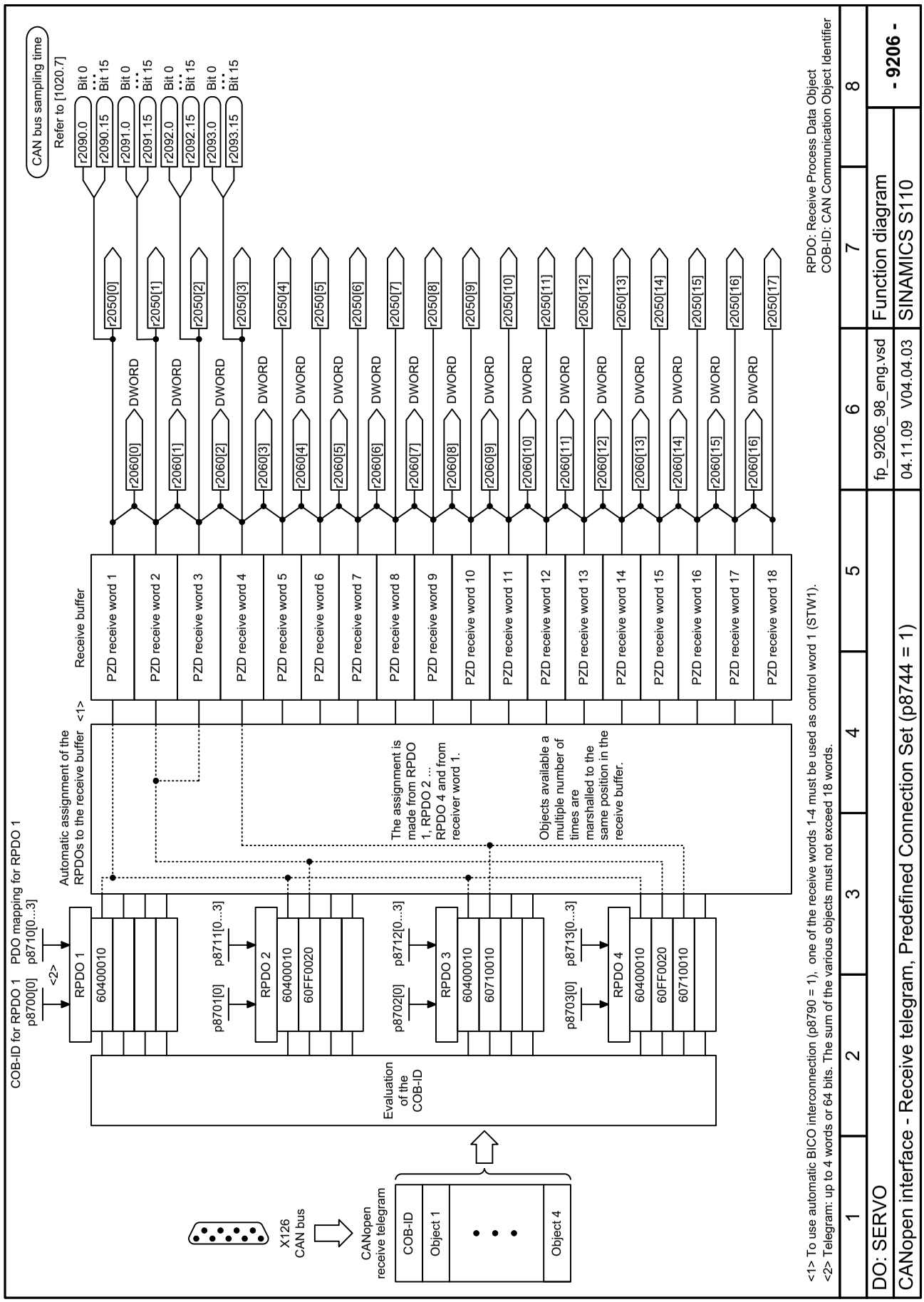

Fig. 3-183 9206 – Receive telegram, Predefined Connection Set (p8744 = 1)

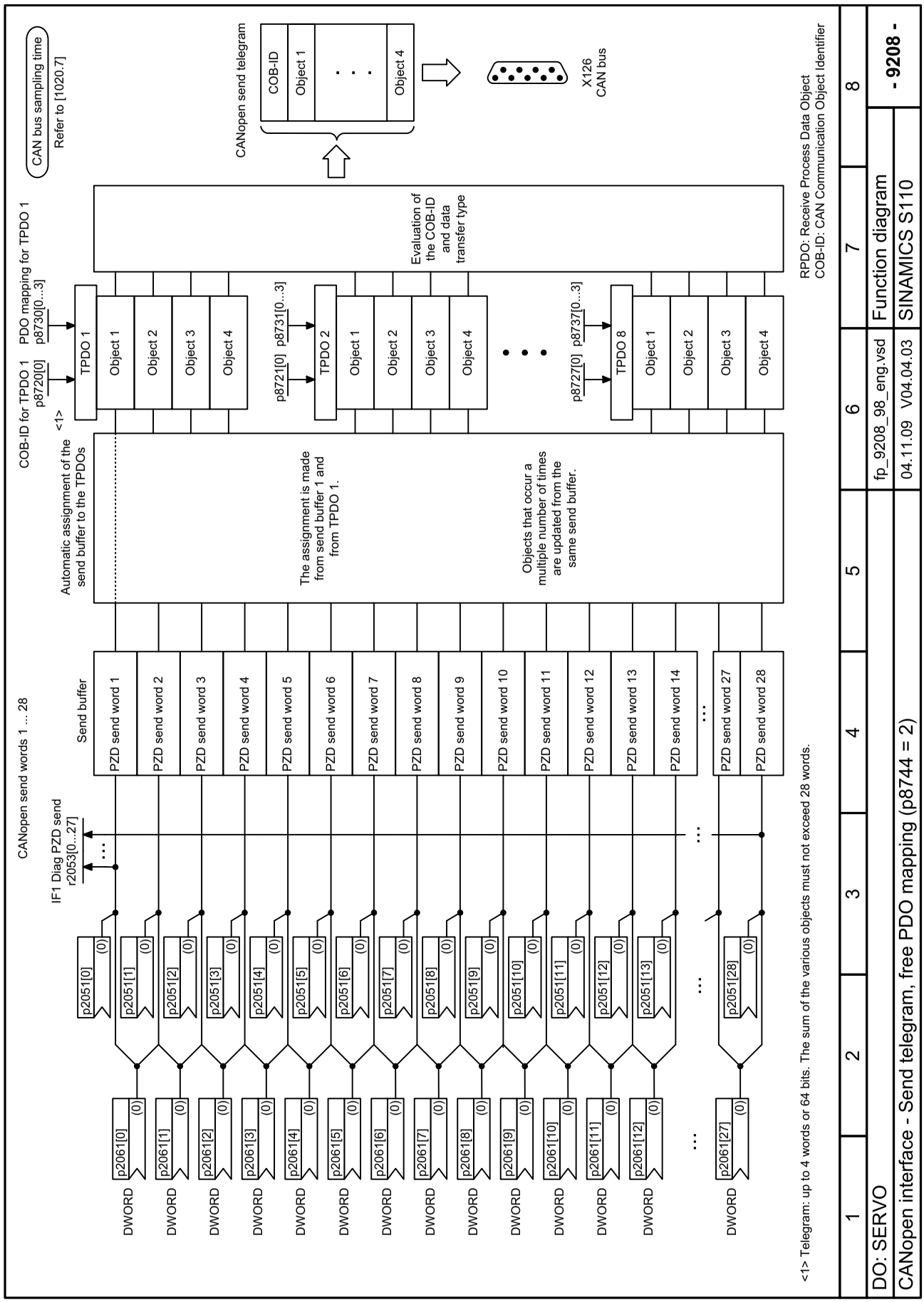

Fig. 3-184 9208 – Send telegram, free PDO mapping (p8744 = 2)

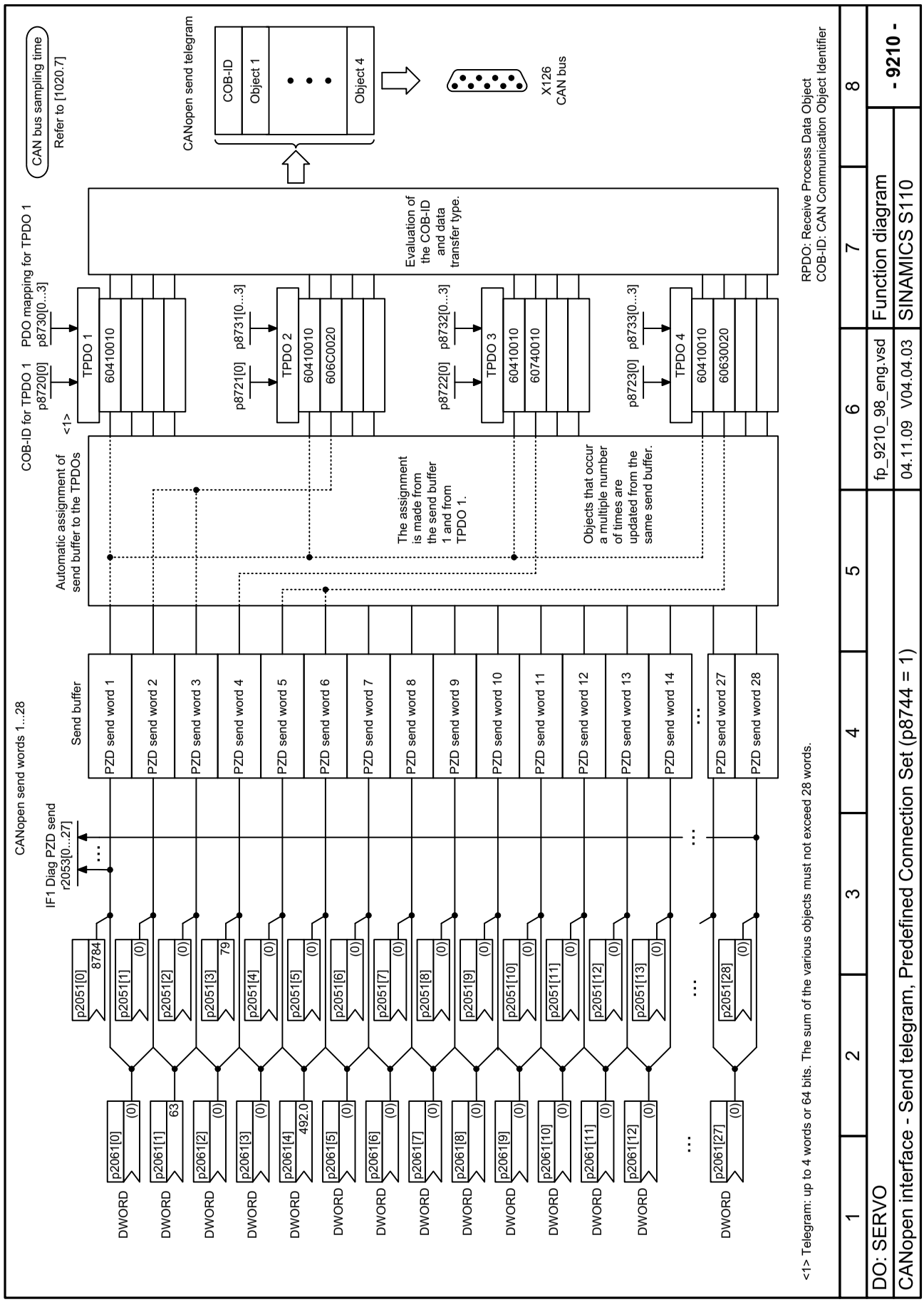

Fig. 3-185 9210 – Send telegram, Predefined Connection Set (p8744 = 1)

CAN bus sampling time
Refer to [1020.7]

Signal targets for control word CANopen

Signal	Meaning	Interconnection parameters <1>	[Function diagram] internal control word	[Function diagram] signal target	Inverted
STW1.0	↑ = ON (pulses can be enabled) **0 = OFF1** (braking with ramp-function generator, then pulse cancellation and ready-to-power-up)	p0840[0] = r2090.0	[2501.3]	[2610]	-
STW1.1	**1 = No coast-down activated** (enable possible) 0 = Activate coast-down (immediate pulse cancellation and power-on inhibit)	p0844[0] = r2090.1	[2501.3]	[2610]	-
STW1.2	**1 = No fast stop activated** (enable possible) 0 = Activate fast stop (braking along an OFF3 ramp p1135, then pulse cancellation and power-on inhibit)	p0848[0] = r2090.2	[2501.3]	[2610]	-
STW1.3	**1 = Enable operation** (pulses can be enabled) 0 = Inhibit operation (cancel pulses)	p0852[0] = r2090.3	[2501.3]	[2610]	-
STW1.4	**Reserved**	-	-	-	-
STW1.5	**Reserved**	-	-	-	-
STW1.6	**Reserved**	-	-	-	-
STW1.7	↑ **= Acknowledge fault**	p2103[0] = r2090.7	[2546.2]	[8060]	-
STW1.8	**Reserved**	-	-	-	-
STW1.9	**Reserved**	-	-	-	-
STW1.10	**Reserved**	-			-
STW1.11	**Can be freely connected**	pxxxx[y] = r2090.11			-
STW1.12	**Can be freely connected**	pxxxx[y] = r2090.12	-	-	-
STW1.13	**Can be freely connected**	pxxxx[y] = r2090.13	-	-	-
STW1.14	**Can be freely connected**	pxxxx[y] = r2090.14	-	-	-
STW1.15	**Can be freely connected**	pxxxx[y] = r2090.15	-	-	-

<1> Depending on the position of the CANopen control word in p8750, the number of the binector to be connected changes.

1	2	3	4	5	6	7	8
DO: SERVO					fp_9220_98_eng.vsd	Function diagram	- 9220 -
CANopen interface - Control word, CANopen					04.11.09 V04.04.03	SINAMICS S110	

Fig. 3-186 9220 – Control word, CANopen

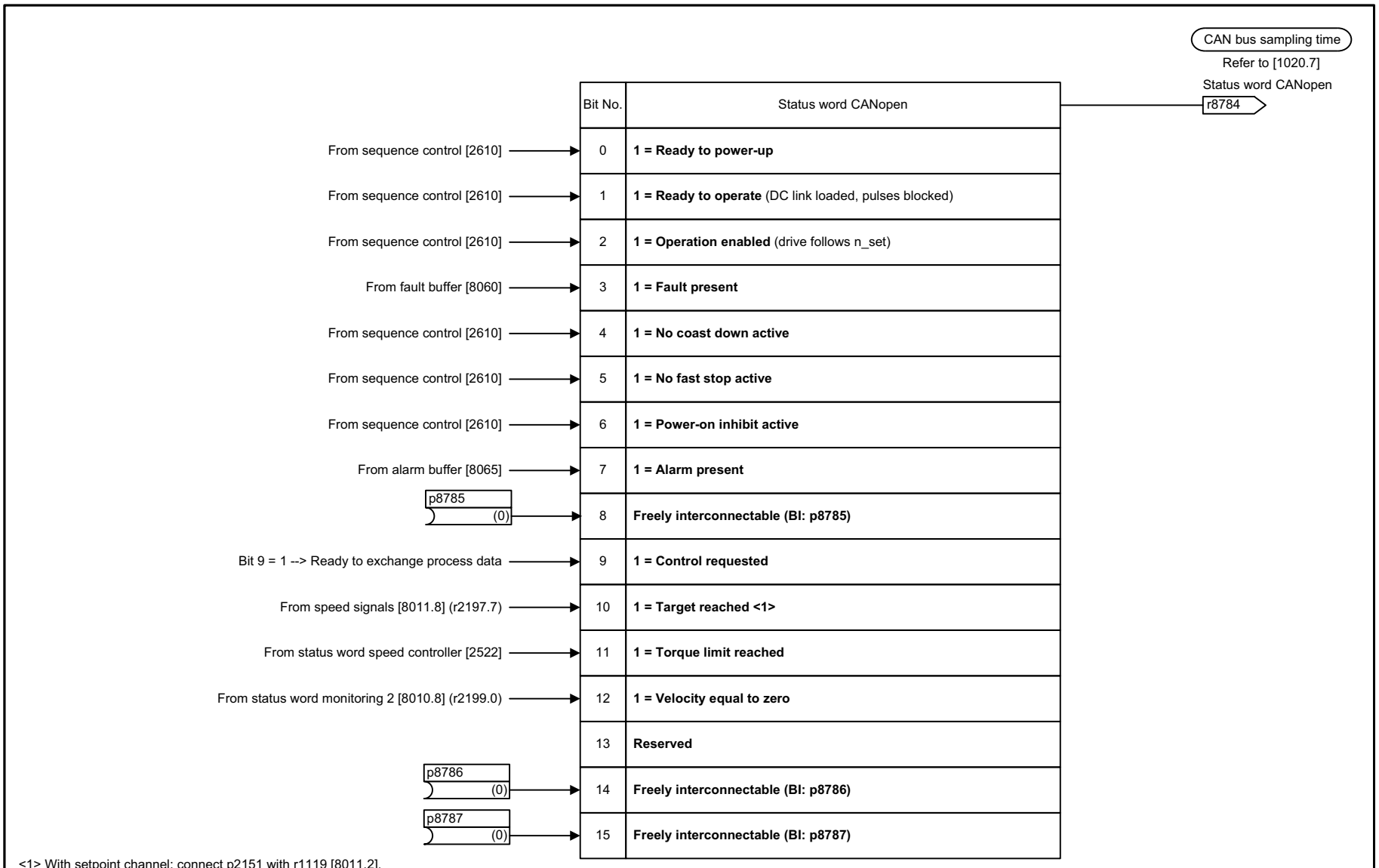

1	2	3	4	5	6	7	8
DO: SERVO					fp_9226_98_eng.vsd	Function diagram	- 9226 -
CANopen interface - Status word, CANopen					04.11.09 V04.04.03	SINAMICS S110	

Fig. 3-187 9226 – Status word, CANopen

3.23 Basic Operator Panel 20 (BOP20)

Function block diagrams

9912 – Control word interconnection 927

PROFIdrive sampling time
Refer to [1020.7]

Interconnection STW BOP (r0019)		<1>
Signal	Meaning	Interconnection parameters
STW BOP.0	**1 = On** **0 = OFF (OFF1)**	p0840[0] = r0019.0
STW BOP.1	**1 = No coast down** 0 = Coast down (OFF2)	p0844[0] = r0019.1
STW BOP.2	**1 = No fast stop** 0 = Fast stop (OFF3)	p0848[0] = r0019.2
STW BOP.3	**Reserved**	-
STW BOP.4	**Reserved**	-
STW BOP.5	**Reserved**	-
STW BOP.6	**Reserved**	-
STW BOP.7	**↑ = Acknowledge fault**	p2102[0] = r0019.7
STW BOP.8	**Reserved**	-
STW BOP.9	**Reserved**	-
STW BOP.10	**Reserved**	-
STW BOP.11	**Reserved**	-
STW BOP.12	**Reserved**	-
STW BOP.13	**1 = Motorized potentiometer, raise**	p1035[0] = r0019.13
STW BOP.14	**1 = Motorized potentiometer, lower**	p1036[0] = r0019.14
STW BOP.15	**Reserved**	-

<1> The BICO interconnection represents an example that can be be changed by the user.

1	2	3	4	5	6	7	8
DO: CU_S110					fp_9912_98_eng.vsd	Function diagram	- 9912 -
Basic Operator Panel 20 (BOP20) - Control word interconnection					27.10.08 V04.04.03	SINAMICS S110	

Fig. 3-188 9912 – Control word interconnection

Faults and alarms

4

Content

4.1	Overview of faults and alarms	930
4.2	List of faults and alarms	939

4.1 Overview of faults and alarms

4.1.1 General information on faults and alarms

Indicating faults and alarms

If a fault occurs, the drive indicates the fault and/or alarm.

The following methods are available for displaying faults and alarms:

- Display via the fault and alarm buffer for PROFIBUS.
- Display via the commissioning software in online operation.

Differences between faults and alarms

The differences between faults and alarms are as follows:

Table 4-1 Differences between faults and alarms

Type	Description
Faults	What happens when a fault occurs? • The appropriate fault reaction is initiated. • Status signal ZSW1.3 is set. • The fault is entered in the fault buffer. How are faults eliminated? • Remove the original cause of the fault. • Acknowledge the fault.
Alarms	What happens when an alarm occurs? • Status signal ZSW1.7 is set. • The alarm is entered in the alarm buffer. How are alarms eliminated? • Alarms acknowledge themselves. If the cause of the alarm is no longer present, they automatically reset themselves.

Fault reactions

The following fault reactions are defined:

Table 4-2 Fault reactions

List	PROFIdrive	Reaction	Description
NONE	-	None	No reaction when a fault occurs **Note** When the "Basic positioner" function module is activated (r0108.4 = 1), the following applies: When a fault occurs with fault reaction "NONE", an active traversing task is interrupted and the system switches to the tracking mode until the fault has been rectified and acknowledged.
OFF1	ON/ OFF	Brake along the ramp-function generator down ramp followed by pulse inhibit	**Closed-loop speed control (p1300 = 20, 21)** • n_set = 0 is input immediately to brake the drive along the ramp-function generator ramp down (p1121). • When zero speed is detected, the motor holding brake (if parameterized) is closed (p1215). The pulses are suppressed when the brake application time (p1217) expires. Zero speed is detected if the actual speed drops below the threshold (p1226) or if the monitoring time (p1227) started when the speed setpoint <= speed threshold (p1226) has expired. **Closed-loop torque control (p1300 = 23)** • The following applies to closed-loop torque control mode: Reaction as for OFF2. • When the system switches to closed-loop control with p1501, the following applies: No separate braking reaction. If the actual speed value drops below the speed threshold (p1226) or the timer stage (p1227) has expired, the motor holding brake (if one is being used) is closed. The pulses are suppressed when the brake application time (p1217) expires.
OFF1_ DELAYED	-	As for OFF1, however delayed	Faults with this fault reaction only become effective after the delay time in p3136 has expired. The remaining time up to OFF1 is displayed in r3137.
OFF2	COAST STOP	Internal/external pulse disable	**Closed-loop speed and torque control** • Immediate pulse suppression, the drive "coasts" to a standstill. • The motor holding brake (if one is being used) is closed immediately. • Switching on inhibited is activated.

Table 4-2 Fault reactions, continued

List	PROFIdrive	Reaction	Description
OFF3	QUICK STOP	Brake along the OFF3 deceleration ramp followed by pulse disable	**Closed-loop speed control (p1300 = 20, 21)** • n_set = 0 is input immediately to brake the drive along the OFF3 ramp down (p1135). • When zero speed is detected, the motor holding brake (if parameterized) is closed. The pulses are suppressed when the closing time of the holding brake (p1217) expires. Zero speed is detected if the actual speed drops below the threshold (p1226) or if the monitoring time (p1227) started when the speed setpoint <= speed threshold (p1226) has expired. • Switching on inhibited is activated. **Closed-loop torque control (p1300 = 23)** • Changeover to speed-controlled operation and other reactions as described for speed-controlled operation.
STOP1	-	-	Available soon.
STOP2	-	n_set = 0	• n_set = 0 is input immediately to brake the drive along the OFF3 ramp down (p1135). • The drive remains in closed-loop speed control.
IASC/ DCBRAKE	-	-	• For synchronous motors, the following applies: If a fault occurs with this fault reaction, an internal armature short-circuit is triggered. The conditions for p1231 = 4 must be observed. • For induction motors, the following applies: If a fault occurs with this fault reaction, DC braking is triggered. DC braking must have been commissioned (p1232, p1233, p1234).
ENCODER	-	Internal/external pulse disable (p0491)	The fault reaction ENCODER is applied as a function of the setting in p0491. Factory setting: p0491 = 0 --> Encoder fault causes OFF2 **Notice** When changing p0491, it is imperative that the information in the description of this parameter is carefully observed.

Acknowledging faults

The list of faults and alarms specifies how to acknowledge each fault after the cause has been eliminated.

Table 4-3 Acknowledging faults

Acknowledgement	Description
POWER ON	The fault is acknowledged by a POWER ON process (switch drive unit off and on again). **Note** If this action has not eliminated the fault cause, the fault is displayed again immediately after power-up.
IMMEDIATE	Faults can be acknowledged on one drive object (Points 1 to 3) or on all drive objects (Point 4) as follows: 1 Set acknowledgement by parameter: p3981 = 0 --> 1 2 Acknowledging via binector inputs: p2103 BI: 1. Acknowledge faults p2104 BI: 2. Acknowledge faults p2105 BI: 3. Acknowledge faults 3 Acknowledging using a PROFIBUS control signal: STW1.7 = 0 --> 1 (edge) 4 Acknowledge all faults p2102 BI: Acknowledge all faults All of the faults on all of the drive objects of the drive system can be acknowledged using this binector input. **Note** • These faults can also be acknowledged by a POWER ON operation. • If this action has not eliminated the fault cause, the fault will continue to be displayed after acknowledgement. • Safety Integrated faults The "Safe standstill" (SH) function must be deselected before these faults are acknowledged.
PULSE SUPPRESSION	The fault can only be acknowledged when the pulses are inhibited (r0899.11 = 0). The same options are available for acknowledging as described under acknowledgement with IMMEDIATE.

4.1.2 Explanation of the list of faults and alarms

The data in the following example has been chosen at random. The information listed below is the maximum amount of information that a description can contain. Some of the information is optional.

The "List of faults and alarms" (Page 939) has the following layout:

- - - - - - - - - - - - Start of example -

Axxxxx (F, N)	**Fault location (optional): Name**
Message value:	Component number: %1, fault cause: %2
Drive object:	List of objects.
Reaction:	NONE
Acknowledgement:	NONE
Cause:	Description of possible causes. Fault value (r0949, interpret format): or alarm value (r2124, interpret format): (optional) Information about fault or alarm values (optional).
Remedy:	Description of possible remedies.
Reaction to F:	NONE (OFF1, OFF2, OFF3)
Acknowledgement for F:	IMMEDIATELY (POWER ON)
Reaction to N:	NONE
Acknowledgement for N:	NONE

- - - - - - - - - - - - End of example -

Axxxxx	**Alarm xxxxx**
Axxxxx (F, N)	**Alarm xxxxx (message type can be changed to F or N)**
Fxxxxx	**Fault xxxxx**
Fxxxxx (A, N)	**Fault xxxxx (report type can be changed to A or N)**
Nxxxxx	**No message**
Nxxxxx (A)	**No message (message type can be changed to A)**
Cxxxxx	**Safety message (separate message buffer)**

A message comprises a letter followed by the relevant number.

The meaning of the letters is as follows:

- A means "Alarm"
- F means "Fault"
- N means "No message" or "Internal message" (or "No report")
- C means "Safety message"

The optional parentheses indicate whether the type specified for this message can be changed and which message types can be adjusted via parameters (p2118, p2119).

Information on reaction and acknowledgement is specified independently for a message with an adjustable message type (e.g. reaction to F, acknowledgement for F).

Note

You can change the default properties of a fault or alarm by setting parameters.

References: /FH3 SINAMICS S110 Function Manual
Chapter "Diagnostics"

The "List of faults and alarms" (Page 939) supplies information referred to the properties of a message set as default. If the properties of a specific message are changed, the corresponding information may have to be modified in this list.

Fault location (optional): Name

The fault location (optional), the name of the fault or alarm and the message number are all used to identify the message (e.g. with the commissioning software).

Message value:

The information provided under the message value informs you about the composition of the fault/alarm value.

Example:

Message value: Component number: %1, fault cause: %2

This message value contains information about the component number and cause of the fault. The entries %1 and %2 are placeholders, which are filled appropriately in online operation (e.g. with the commissioning software).

Drive object:

Each message (fault/alarm) specifies the drive object in which it can be found.

A message can belong to either one, several, or all drive objects.

Reaction: Default fault reaction (adjustable fault reaction)

Specifies the default reaction in the event of a fault.

The optional brackets indicate whether the default fault reactions can be changed and which fault reactions can be adjusted via parameters (p2100, p2101).

Note

See Table "Fault reactions" (Page 931)

Acknowledgement: Default acknowledgement (adjustable acknowledgement)

Specifies the default method of acknowledging faults after the cause has been eliminated.

The optional brackets indicate whether the default acknowledgement can be changed and which acknowledgement can be adjusted via parameters (p2126, p2127).

Note

See Table "Acknowledging faults" (Page 933)

Cause:

Describes the possible causes of the fault or alarm. A fault or alarm value can also be specified (optional).

Fault value (r0949, format):

The fault value is entered in the fault buffer in r0949[0..63] and specifies additional, more precise information about a fault.

Alarm value (r2124, format):

The alarm value specifies additional, more precise information about an alarm.

The alarm value is entered in the alarm buffer in r2124[0..7] and specifies additional, more precise information about an alarm.

Remedy:

Description of the methods available for eliminating the cause of the active fault/alarm

⚠ **WARNING**
In certain cases, servicing and maintenance personnel are responsible for choosing a suitable method for eliminating the cause of faults.

4.1.3 Number ranges of faults and alarms

Note

The following number ranges represent an overview of all faults and alarms used in the SINAMICS drive family.

The faults and alarms for the product described in this List Manual are described in detail in "List of faults and alarms" (Page 939).

Faults and alarms are organized into the following number ranges:

Table 4-4 Number ranges of faults and alarms

of	To	Area
1000	3999	Control Unit
4000	4999	Reserved
5000	5999	Power section
6000	6899	Infeed
6900	6999	Braking Module
7000	7999	Drive
8000	8999	Option Board
9000	12999	Reserved
13000	13020	Licensing
13021	13099	Reserved
13100	13102	Know-how protection
13103	19999	Reserved
20000	29999	OEM
30000	30999	DRIVE-CLiQ component power unit
31000	31999	DRIVE-CLiQ component encoder 1
32000	32999	DRIVE-CLiQ component encoder 2 **Note** Faults that occur are automatically output as an alarm if the encoder is parameterized as a direct measuring system and does not intervene in the motor control.
33000	33999	DRIVE-CLiQ component encoder 3 **Note** Faults that occur are automatically output as an alarm if the encoder is parameterized as a direct measuring system and does not intervene in the motor control.
34000	34999	Voltage Sensing Module (VSM)
35000	35199	Terminal Module 54F (TM54F)
35200	35999	Terminal Module 31 (TM31)
36000	36999	DRIVE-CLiQ Hub Module
37000	37999	HF Damping Module

Table 4-4 Number ranges of faults and alarms, continued

of	To	Area
40000	40999	Controller Extension 32 (CX32)
41000	48999	Reserved
49000	49999	SINAMICS GM/SM/GL
50000	50499	Communication Board (COMM BOARD)
50500	59999	OEM Siemens
60000	65535	SINAMICS DC MASTER (closed-loop DC current control)

4.2 List of faults and alarms

Product: S110, Version: 4403900, Language: eng
Objects: CU_S110-CAN, CU_S110-DP, CU_S110-PN, SERVO_S110-CAN, SERVO_S110-DP, SERVO_S110-PN

F01000 Internal software error

Message value: %1
Drive object: All objects
Reaction: OFF2
Acknowledge: POWER ON
Cause: An internal software error has occurred.
Fault value (r0949, interpret hexadecimal):
Only for internal Siemens troubleshooting.
Remedy: - evaluate fault buffer (r0945).
- carry out a POWER ON (power off/on) for all components.
- upgrade firmware to later version.
- contact the Hotline.
- replace the Control Unit.

F01001 FloatingPoint exception

Message value: %1
Drive object: All objects
Reaction: OFF2
Acknowledge: POWER ON
Cause: An exception occurred during an operation with the FloatingPoint data type.
The error may be caused by the basic system or an OA application (e.g., FBLOCKS, DCC).
Fault value (r0949, interpret hexadecimal):
Only for internal Siemens troubleshooting.
Note:
Refer to r9999 for further information about this fault.
r9999[0]: Fault number.
r9999[1]: Program counter at the time when the exception occurred.
r9999[2]: Cause of the FloatingPoint exception.
Bit 0 = 1: Operation invalid
Bit 1 = 1: Division by zero
Bit 2 = 1: Overflow
Bit 3 = 1: Underflow
Bit 4 = 1: Inaccurate result
Remedy: - carry out a POWER ON (power off/on) for all components.
- check configuration and signals of the blocks in FBLOCKS.
- check configuration and signals of DCC charts.
- upgrade firmware to later version.
- contact the Hotline.

F01002 Internal software error

Message value: %1
Drive object: All objects
Reaction: OFF2
Acknowledge: IMMEDIATELY
Cause: An internal software error has occurred.
Fault value (r0949, interpret hexadecimal):
Only for internal Siemens troubleshooting.
Remedy: - carry out a POWER ON (power off/on) for all components.
- upgrade firmware to later version.
- contact the Hotline.

F01003 Acknowledgement delay when accessing the memory

Message value: %1
Drive object: All objects
Reaction: OFF2
Acknowledge: IMMEDIATELY
Cause: A memory area was accessed that does not return a "READY".
Fault value (r0949, interpret hexadecimal):
Only for internal Siemens troubleshooting.
Remedy: - carry out a POWER ON (power off/on) for all components.
- contact the Hotline.

N01004 (F, A) Internal software error

Message value: %1
Drive object: All objects
Reaction: NONE
Acknowledge: NONE
Cause: An internal software error has occurred.
Fault value (r0949, hexadecimal):
Only for internal Siemens troubleshooting.
Remedy: - read out diagnostics parameter (r9999).
- contact the Hotline.
Reaction upon F: OFF2
Acknowl. upon F: POWER ON
Reaction upon A: NONE
Acknowl. upon A: NONE

F01005 Firmware download for DRIVE-CLiQ component unsuccessful

Message value: Component number: %1, fault cause: %2
Drive object: All objects
Reaction: NONE
Acknowledge: IMMEDIATELY
Cause: It was not possible to download the firmware to a DRIVE-CLiQ component.
Fault value (r0949, interpret hexadecimal):
yyxxxx hex: yy = component number, xxxx = fault cause
xxxx = 000B hex = 11 dec:
DRIVE-CLiQ component has detected a checksum error.
xxxx = 000F hex = 15 dec:
The selected DRIVE-CLiQ component did not accept the contents of the firmware file.
xxxx = 0012 hex = 18 dec:
Firmware version is too old and is not accepted by the component.
xxxx = 0013 hex = 19 dec:
Firmware version is not suitable for the hardware release of the component.
xxxx = 0065 hex = 101 dec:
After several communication attempts, no response from the DRIVE-CLiQ component.
xxxx = 008B hex = 139 dec:
Initially, a new boot loader is loaded (must be repeated after POWER ON).
xxxx = 008C hex = 140 dec:
Firmware file for the DRIVE-CLiQ component not available on the memory card.
xxxx = 008D hex = 141 dec:
An inconsistent length of the firmware file was signaled. The firmware download may have been caused by a loss of connection to the firmware file. This can occur during a project download/reset in the case of a SINAMICS Integrated Control Unit, for example.
xxxx = 008F hex = 143 dec:
Component has not changed to the mode for firmware download. It was not possible to delete the existing firmware.

xxxx = 0090 hex = 144 dec:
When checking the firmware that was downloaded (checksum), the component detected a fault. It is possible that the file on the memory card is defective.
xxxx = 0091 hex = 145 dec:
Checking the loaded firmware (checksum) was not completed by the component in the appropriate time.
xxxx = 009C hex = 156 dec:
Component with the specified component number is not available (p7828).
xxxx = Additional values:
Only for internal Siemens troubleshooting.

Remedy:
- check the selected component number (p7828).
- check the DRIVE-CLiQ wiring.
- save suitable firmware file for download in the directory "/siemens/sinamics/code/sac/".
- use a component with a suitable hardware version
- after POWER ON has been carried out again for the DRIVE-CLiQ component, download firmware again. Depending on p7826, the firmware will be automatically downloaded.

A01006 Firmware update for DRIVE-CLiQ component required

Message value: Component number: %1
Drive object: All objects
Reaction: NONE
Acknowledge: NONE
Cause: The firmware of a DRIVE-CLiQ component must be updated as there is no suitable firmware or firmware version in the component for operation with the Control Unit.
Alarm value (r2124, interpret decimal):
Component number of the DRIVE-CLiQ component.
Remedy: Firmware update using the commissioning software:
The firmware version of all of the components on the "Version overview" page can be read in the Project Navigator under "Configuration" of the associated drive unit and an appropriate firmware update can be carried out.
Firmware update via parameter:
- take the component number from the alarm value and enter into p7828.
- start the firmware download with p7829 = 1.

A01007 POWER ON for DRIVE-CLiQ component required

Message value: Component number: %1
Drive object: All objects
Reaction: NONE
Acknowledge: NONE
Cause: A DRIVE-CLiQ component must be powered up again (POWER ON) (e.g. due to a firmware update).
Alarm value (r2124, interpret decimal):
Component number of the DRIVE-CLiQ component.
Note:
For a component number = 1, a POWER ON of the Control Unit is required.
Remedy: Switch off the power supply of the specified DRIVE-CLiQ component and switch it on again.

A01009 (N) CU: Control module overtemperature

Message value: -
Drive object: All objects
Reaction: NONE
Acknowledge: NONE
Cause: The temperature (r0037[0]) of the control module (Control Unit) has exceeded the specified limit value.
Remedy:
- check the air intake for the Control Unit.
- check the Control Unit fan.

Note:
The alarm automatically disappears after the limit value has been undershot.

Reaction upon N: NONE
Acknowl. upon N: NONE

F01010 Drive type unknown

Message value: %1
Drive object: All objects
Reaction: NONE
Acknowledge: IMMEDIATELY
Cause: An unknown drive type was found.
Fault value (r0949, interpret decimal):
Drive object number (refer to p0101, p0107).
Remedy: - replace Power Module.
- carry out a POWER ON (power off/on) for all components.
- upgrade firmware to later version.
- contact the Hotline.

F01011 (N) Download interrupted

Message value: %1
Drive object: All objects
Reaction: NONE
Acknowledge: IMMEDIATELY
Cause: The project download was interrupted.
Fault value (r0949, interpret decimal):
1: The user prematurely interrupted the project download.
2: The communication cable was interrupted (e.g. cable breakage, cable withdrawn).
3: The project download was prematurely ended by the commissioning software (e.g. STARTER, SCOUT).
100: Different versions between the firmware version and project files "Download from card".
Note:
The response to an interrupted download is the state "first commissioning".
Remedy: - check the communication cable.
- download the project again.
- boot from previously saved files (power-down/power-up or p0976).
- when downloading from the card, use the matching version.
Reaction upon N: NONE
Acknowl. upon N: NONE

F01012 (N) Project conversion error

Message value: %1
Drive object: SERVO_S110-CAN, SERVO_S110-DP, SERVO_S110-PN
Reaction: OFF2 (NONE)
Acknowledge: IMMEDIATELY
Cause: When converting the project of an older firmware version, an error occurred.
Fault value (r0949, interpret decimal):
Parameter number of the parameter causing the error.
For fault value = 600, the following applies:
The temperature evaluation is no longer assigned to the power unit but to the encoder evaluation.
Notice:
Monitoring of the motor temperature is no longer ensured.
Remedy: Check the parameter indicated in the fault value and correctly adjust it accordingly.
For fault value = 600:
Parameter p0600 must be set to the values 1 or 2 in accordance with the assignment of the internal encoder evaluation to the encoder interface.
Value 1 means: The internal encoder evaluation is assigned to the encoder interface 1 via p0187.
Value 2 means: The internal encoder evaluation is assigned to the encoder interface 2 via p0188.
- If necessary, the internal encoder evaluation must be assigned to an encoder interface via parameters p0187 or p0188 accordingly.
- If necessary, upgrade the firmware to a later version.

Reaction upon N: NONE
Acknowl. upon N: NONE

F01015 Internal software error

Message value: %1
Drive object: All objects
Reaction: OFF2
Acknowledge: POWER ON
Cause: An internal software error has occurred.
Fault value (r0949, interpret decimal):
Only for internal Siemens troubleshooting.
Remedy: - carry out a POWER ON (power off/on) for all components.
- upgrade firmware to later version.
- contact the Hotline.

A01016 (F) Firmware changed

Message value: %1
Drive object: All objects
Reaction: NONE
Acknowledge: NONE
Cause: At least one firmware file in the directory /SIEMENS/SINAMICS/ has been changed without authorization with respect to the version shipped from the factory. No changes are permitted in this directory.
Alarm value (r2124, interpret decimal):
0: Checksum of one file is incorrect.
1: File missing.
2: Too many files.
3: Incorrect firmware version.
4: Incorrect checksum of the back-up file.
See also: r9925 (Firmware file incorrect)
Remedy: For the non-volatile memory for the firmware (memory card/device memory), restore the delivery condition.
Note:
The file involved can be read out using parameter r9925.
See also: r9926 (Firmware check status)
Reaction upon F: OFF2
Acknowl. upon F: POWER ON

A01017 Component lists changed

Message value: %1
Drive object: All objects
Reaction: NONE
Acknowledge: NONE
Cause: On the memory card, one file in the directory /SIEMENS/SINAMICS/DATA or /ADDON/SINAMICS/DATA has been illegally changed with respect to that supplied from the factory. No changes are permitted in this directory.
Alarm value (r2124, interpret decimal):
zyx dec: x = Problem, y = Directory, z = File name
x = 1: File does not exist.
x = 2: Firmware version of the file does not match the software version.
x = 3: File checksum is incorrect.
y = 0: Directory /SIEMENS/SINAMICS/DATA/
y = 1: Directory /ADDON/SINAMICS/DATA/
z = 0: File MOTARM.ACX
z = 1: File MOTSRM.ACX
z = 2: File MOTSLM.ACX
z = 3: File ENCDATA.ACX
z = 4: File FILTDATA.ACX
z = 5: File BRKDATA.ACX

z = 6: File DAT_BEAR.ACX
z = 7: File CFG_BEAR.ACX
z = 8: File ENC_GEAR.ACX

Remedy: For the file on the memory card involved, restore the status originally supplied from the factory.

F01018 Booting has been interrupted several times

Message value: -
Drive object: All objects
Reaction: NONE
Acknowledge: POWER ON
Cause: Module booting was interrupted several times.
Possible reasons for booting being interrupted:
- POWER OFF of the module.
- CPU crash.
- USER data invalid.

After this fault is output, then the module is booted with the factory settings.
Remedy: Power down the module and power it up again.
Note:
After switching on, the module reboots from the USER data (if available).
If the fault situation is repeated, then this fault is again output after several interrupted boots.

A01019 Writing to the removable data medium unsuccessful

Message value: -
Drive object: All objects
Reaction: NONE
Acknowledge: NONE
Cause: The write access to the removable data medium was unsuccessful.
Remedy: Remove and check the removable data medium. Then run the data backup again.

A01020 Write to RAM disk unsuccessful

Message value: -
Drive object: All objects
Reaction: NONE
Acknowledge: NONE
Cause: The write access to the internal RAM disk was unsuccessful.
Remedy: Adapt the size of the system logbook (p9930) to the internal RAM disk.

F01023 Software timeout (internal)

Message value: %1
Drive object: All objects
Reaction: NONE
Acknowledge: IMMEDIATELY
Cause: An internal software timeout has occurred.
Fault value (r0949, interpret decimal):
Only for internal Siemens troubleshooting.
Remedy: - carry out a POWER ON (power off/on) for all components.
- upgrade firmware to later version.
- contact the Hotline.

F01030 Sign-of-life failure for master control

Message value: -
Drive object: SERVO_S110-CAN, SERVO_S110-DP, SERVO_S110-PN
Reaction: OFF3 (ENCODER, IASC/DCBRAKE, NONE, OFF1, OFF2, STOP1, STOP2)
Acknowledge: IMMEDIATELY
Cause: For active PC master control, no sign-of-life was received within the monitoring time.
The master control was returned to the active BICO interconnection.

Remedy: Set the monitoring time higher at the PC or, if required, completely disable the monitoring function.
For the commissioning software, the monitoring time is set as follows:
<Drive> -> Commissioning -> Control panel -> Button "Fetch master control" -> A window is displayed to set the monitoring time in milliseconds.
Notice:
The monitoring time should be set as short as possible. A long monitoring time means a late response when the communication fails!

F01031 Sign-of-life failure for OFF in REMOTE

Message value: -
Drive object: SERVO_S110-CAN, SERVO_S110-DP, SERVO_S110-PN
Reaction: OFF3 (ENCODER, IASC/DCBRAKE, NONE, OFF1, OFF2, STOP1, STOP2)
Acknowledge: IMMEDIATELY
Cause: With the "OFF in REMOTE" mode active, no sign-of-life was received within 3 seconds.
Remedy: - Check the data cable connection at the serial interface for the Control Unit (CU) and operator panel.
- Check the data cable between the Control Unit and operator panel.

F01033 Units changeover: Reference parameter value invalid

Message value: Parameter: %1
Drive object: SERVO_S110-CAN, SERVO_S110-DP, SERVO_S110-PN
Reaction: NONE
Acknowledge: IMMEDIATELY
Cause: When changing over the units to the referred representation type, it is not permissible for any of the required reference parameters to be equal to 0.0
Fault value (r0949, parameter):
Reference parameter whose value is 0.0.
See also: p0349 (System of units motor equivalent circuit diagram data), p0505 (Selecting the system of units), p0595 (Selecting technological units)
Remedy: Set the value of the reference parameter to a number different than 0.0.
See also: p0304, p0305, p0310, p0596, p2000, p2001, p2002, p2003, r2004

F01034 Units changeover: Calculation parameter values after reference value change unsuccessful

Message value: Parameter: %1
Drive object: SERVO_S110-CAN, SERVO_S110-DP, SERVO_S110-PN
Reaction: NONE
Acknowledge: IMMEDIATELY
Cause: The change of a reference parameter meant that for an involved parameter the selected value was not able to be re-calculated in the per unit representation. The change was rejected and the original parameter value restored.
Fault value (r0949, parameter):
Parameter whose value was not able to be re-calculated.
See also: p0304, p0305, p0310, p0596, p2000, p2001, p2002, p2003, r2004
Remedy: Select the value of the reference parameter such that the parameter involved can be calculated in the per unit representation.
See also: p0304, p0305, p0310, p0596, p2000, p2001, p2002, p2003, r2004

A01035 (F) ACX: Boot from the back-up parameter back-up files

Message value: %1
Drive object: All objects
Reaction: NONE
Acknowledge: NONE
Cause: When the Control Unit is booted, no complete data set was found from the parameter back-up files. The last time that the parameterization was saved, it was not completely carried out. Instead, a back-up data set or a back-up parameter back-up file is downloaded.
Alarm value (r2124, interpret hexadecimal):
Only for internal Siemens troubleshooting.

Remedy: If you have saved the project using the commissioning software, carry out a new download for your project. Save using the function "Copy RAM to ROM" or with p0977 = 1 so that all of the parameter files are again completely written to the non-volatile memory.
Reaction upon F: NONE (OFF1, OFF2, OFF3)
Acknowl. upon F: IMMEDIATELY

F01036 (A) ACX: Parameter back-up file missing

Message value: %1
Drive object: All objects
Reaction: NONE (OFF1, OFF2, OFF3)
Acknowledge: IMMEDIATELY
Cause: When downloading the device parameterization, a parameter back-up file associated with a drive object cannot be found. Neither a PSxxxyyy.ACX, a PSxxxyyy.NEW nor a PSxxxyyy.BAK parameter back-up file exists in the non-volatile memory for this drive object.
Fault value (r0949, interpret hexadecimal):
Byte 1: yyy in the file name PSxxxyyy.ACX
yyy = 000 --> consistency back-up file
yyy = 001 ... 062 --> drive object number
yyy = 099 --> PROFIBUS parameter back-up file
Byte 2, 3, 4:
Only for internal Siemens troubleshooting.
Remedy: If you have saved the project data using the commissioning software, carry out a new download for your project. Save using the function "Copy RAM to ROM" or with p0977 = 1 so that all of the parameter files are again completely written to the non-volatile memory.
If you have not saved the project data, then first commissioning of the system has to be carried out again.
Reaction upon A: NONE
Acknowl. upon A: NONE

F01037 (A) ACX: Re-naming the parameter back-up file unsuccessful

Message value: %1
Drive object: All objects
Reaction: NONE (OFF1, OFF2, OFF3)
Acknowledge: IMMEDIATELY
Cause: Re-naming after saving a parameter back-up file in the non-volatile memory was unsuccessful.
One of the parameter back-up files to be re-named had the "read only" attribute. The parameter back-up files are saved in the directory \USER\SINAMICS\DATA.
It is possible that the non-volatile memory is defective.
Fault value (r0949, interpret hexadecimal):
Byte 1: yyy in the file names PSxxxyyy.* or CAxxxyyy.* or CCxxxyyy.*
yyy = 000 --> consistency back-up file
yyy = 099 --> PROFIBUS parameter back-up file PSxxx099.*
Byte 2: xxx in the file name PSxxxyyy.*
xxx = 000 --> data save started with p0977 = 1
xxx = 010 --> data save started with p0977 = 10
xxx = 011 --> data save started with p0977 = 11
xxx = 012 --> data save started with p0977 = 12
Byte 4, 3:
Only for internal Siemens troubleshooting.
Remedy: - check whether one of the files to be overwritten has the attribute "read only" and change this file attribute to "writable". Check all of the files (PSxxxyyy.*, CCxxxyyy.*, CAxxxyyy.*) that belong to drive yyy designated in the fault value.
- replace the memory card or Control Unit.
Reaction upon A: NONE
Acknowl. upon A: NONE

F01038 (A) ACX: Loading the parameter back-up file unsuccessful

Message value: %1

Drive object: All objects

Reaction: NONE (OFF1, OFF2, OFF3)

Acknowledge: IMMEDIATELY

Cause: An error has occurred when downloading PSxxxyyy.ACX or PTxxxyyy.ACX files from the non-volatile memory.
Fault value (r0949, interpret hexadecimal):
Byte 1: yyy in the file name PSxxxyyy.ACX
yyy = 000 --> consistency back-up file
yyy = 001 ... 062 --> drive object number
yyy = 099 --> PROFIBUS parameter back-up file
Byte 2:
255 = incorrect drive object type
254 = topology comparison unsuccessful -> drive object type was not able to be identified
Reasons could be:
- incorrect component type in the actual topology
- component does not exist in the actual topology
- component not active
Otherwise for internal Siemens troubleshooting.
Byte 4, 3:
Only for internal Siemens troubleshooting.

Remedy: - If you have saved the project data using the commissioning software, carry out a new download for your project. Save using the function "Copy RAM to ROM" or with p0977 = 1 so that all of the parameter files are again completely written to the non-volatile memory.
- replace the memory card or Control Unit.
- for byte 1 = 255:
Correct the drive object type (see p0107).

Reaction upon A: NONE

Acknowl. upon A: NONE

F01039 (A) ACX: Writing to the parameter back-up file was unsuccessful

Message value: %1

Drive object: All objects

Reaction: NONE (OFF1, OFF2, OFF3)

Acknowledge: IMMEDIATELY

Cause: Writing to at least one parameter back-up file PSxxxyyy.*** in the non-volatile memory was unsuccessful.
- In the directory /USER/SINAMICS/DATA/ at least one parameter back-up file PSxxxyyy.*** has the "read only" file attribute and cannot be overwritten.
- There is not sufficient free memory space available.
- The non-volatile memory is defective and cannot be written to.
Fault value (r0949, interpret hexadecimal):
dcba hex
a = yyy in the file names PSxxxyyy.***
a = 000 --> consistency back-up file
a = 001 ... 062 --> drive object number
a = 070 --> FEPROM.BIN
a = 080 --> DEL4BOOT.TXT
a = 099 --> PROFIBUS parameter back-up file
b = xxx in the file names PSxxxyyy.***
b = 000 --> data save started with p0977 = 1
b = 010 --> data save started with p0977 = 10
b = 011 --> data save started with p0977 = 11
b = 012 --> data save started with p0977 = 12
d, c:
Only for internal Siemens troubleshooting.

Remedy: - check the file attribute of the files (PSxxxyyy.***, CAxxxyyy.***, CCxxxyyy.***) and, if required, change from "read only" to "writeable".
- check the free memory space in the non-volatile memory. Approx. 80 kbyte of free memory space is required for every drive object in the system.
- replace the memory card or Control Unit.

Reaction upon A: NONE

Acknowl. upon A: NONE

F01040 Save parameter settings and carry out a POWER ON

Message value: -

Drive object: All objects

Reaction: OFF2

Acknowledge: POWER ON

Cause: A parameter was changed in the drive system which means that it is necessary to save the parameters and re-boot (e.g. p0110).

Remedy: - save the parameters (p0971/p0977).
- carry out a POWER ON (power off/on) for all components.

F01041 Parameter save necessary

Message value: %1

Drive object: All objects

Reaction: NONE

Acknowledge: IMMEDIATELY

Cause: Defective or missing files were detected on the memory card when booting.
Fault value (r0949, interpret decimal):
1: Source file cannot be opened.
2: Source file cannot be read.
3: Target directory cannot be set up.
4. Target file cannot be set up/opened.
5. Target file cannot be written to.
Additional values:
Only for internal Siemens troubleshooting.

Remedy: - save the parameters.
- download the project again to the drive unit.
- update the firmware
- if required, replace the Control Unit and/or memory card card.

F01042 Parameter error during project download

Message value: Parameter: %1, Index: %2, fault cause: %3

Drive object: All objects

Reaction: OFF2 (NONE, OFF1, OFF3)

Acknowledge: IMMEDIATELY

Cause: An error was detected when downloading a project using the commissioning software (e.g. incorrect parameter value).
For the specified parameter, it was detected that dynamic limits were exceeded that may possibly depend on other parameters.
Fault value (r0949, interpret hexadecimal):
ccbbaaaa hex
aaaa = Parameter
bb = Index
cc = fault cause
0: Parameter number illegal.
1: Parameter value cannot be changed.
2: Lower or upper value limit exceeded.
3: Sub-index incorrect.
4: No array, no sub-index.

5: Data type incorrect.
6: Setting not permitted (only resetting).
7: Descriptive element cannot be changed.
9: Descriptive data not available.
11: No master control.
15: No text array available.
17: Task cannot be executed due to operating state.
20: Illegal value.
21: Response too long.
22: Parameter address illegal.
23: Format illegal.
24: Number of values not consistent.
25: Drive object does not exist.
101: Presently de-activated.
104: Illegal value.
107: Write access not permitted when controller enabled.
108: Unit unknown.
109: Write access only in the commissioning state, encoder (p0010 = 4).
110: Write access only in the commissioning state, motor (p0010 = 3).
111: Write access only in the commissioning state, power unit (p0010 = 2).
112: Write access only in the quick commissioning mode (p0010 = 1).
113: Write access only in the ready mode (p0010 = 0).
114: Write access only in the commissioning state, parameter reset (p0010 = 30).
115: Write access only in the Safety Integrated commissioning state (p0010 = 95).
116: Write access only in the commissioning state, technological application/units (p0010 = 5).
117: Write access only in the commissioning state (p0010 not equal to 0).
118: Write access only in the commissioning state, download (p0010 = 29).
119: Parameter may not be written in download.
120: Write access only in the commissioning state, drive basic configuration (device: p0009 = 3).
121: Write access only in the commissioning state, define drive type (device: p0009 = 2).
122: Write access only in the commissioning state, data set basic configuration (device: p0009 = 4).
123: Write access only in the commissioning state, device configuration (device: p0009 = 1).
124: Write access only in the commissioning state, device download (device: p0009 = 29).
125: Write access only in the commissioning state, device parameter reset (device: p0009 = 30).
126: Write access only in the commissioning state, device ready (device: p0009 = 0).
127: Write access only in the commissioning state, device (device: p0009 not equal to 0).
129: Parameter may not be written in download.
130: Transfer of the master control is inhibited via binector input p0806.
131: Required BICO interconnection not possible because BICO output does not supply floating value
132: Free BICO interconnection inhibited via p0922.
133: Access method not defined.
200: Below the valid values.
201: Above the valid values.
202: Cannot be accessed from the Basic Operator Panel (BOP).
203: Cannot be read from the Basic Operator Panel (BOP).
204: Write access not permitted.

Remedy: - enter the correct value in the specified parameter.
- identify the parameter that restricts the limits of the specified parameter.

F01043 Fatal error at project download

Message value: Fault cause: %1

Drive object: All objects

Reaction: OFF2 (OFF1, OFF3)

Acknowledge: IMMEDIATELY

Cause: A fatal error was detected when downloading a project using the commissioning software.
Fault value (r0949, interpret decimal):
1: Device status cannot be changed to Device Download (drive object ON?).
2: Incorrect drive object number.
3: A drive object that has already been deleted is deleted again.
4: Deleting of a drive object that has already been registered for generation.
5: Deleting a drive object that does not exist.
6: Generating an undeleted drive object that already existed.
7: Regenerating a drive object already registered for generation.
8: Maximum number of drive objects that can be generated exceeded.
9: Error while generating a device drive object.
10: Error while generating target topology parameters (p9902 and p9903).
11: Error while generating a drive object (global component).
12: Error while generating a drive object (drive component).
13: Unknown drive object type.
14: Drive status cannot be changed to "ready for operation" (r0947 and r0949).
15: Drive status cannot be changed to drive download.
16: Device status cannot be changed to "ready for operation".
17: It is not possible to download the topology. The component wiring should be checked, taking into account the various messages/signals.
18: A new download is only possible if the factory settings are restored for the drive unit.
19: The slot for the option module has been configured several times (e.g. CAN and COMM BOARD)
20: The configuration is inconsistent (e.g. CAN for Control Unit, however no CAN configured for drive objects A_INF, SERVO or VECTOR).
Additional values: only for internal Siemens troubleshooting.

Remedy: - use the current version of the commissioning software.
- modify the offline project and carry out a new download (e.g. compare the number of drive objects, motor, encoder, power unit in the offline project and at the drive).
- change the drive state (is a drive rotating or is there a message/signal?).
- carefully note any other messages/signals and remove their cause.

F01044 CU: Descriptive data error

Message value: %1

Drive object: All objects

Reaction: OFF2

Acknowledge: POWER ON

Cause: An error was detected when loading the descriptive data saved in the non-volatile memory.

Remedy: Replace the memory card or Control Unit.

A01045 CU: Configuring data invalid

Message value: %1

Drive object: All objects

Reaction: NONE

Acknowledge: NONE

Cause: An error was detected when evaluating the parameter files PSxxxyyy.ACX, PTxxxyyy.ACX, CAxxxyyy.ACX, or CCxxxyyy.ACX saved in the non-volatile memory.
Alarm value (r2124, interpret hexadecimal):
Only for internal Siemens troubleshooting.

Remedy: Restore the factory setting using (p0976 = 1) and re-load the project to the drive unit. Operation without any restrictions is then possible.
After downloading the project, save the parameters in STARTER using "Copy RAM to ROM" or with p0977 = 1. This overwrites the incorrect parameter files in the non-volatile memory.

A01049 CU: It is not possible to write to file

Message value: %1
Drive object: All objects
Reaction: NONE
Acknowledge: NONE
Cause: It is not possible to write into a write-protected file (PSxxxxxx.acx). The write request was interrupted.
Alarm value (r2124, interpret decimal):
Drive object number.
Remedy: Check whether the "write protected" attribute has been set for the files in the non-volatile memory under .../USER/SINAMICS/DATA/...
When required, remove write protection and save again (e.g. set p0977 to 1).

F01050 Memory card and device incompatible

Message value: -
Drive object: All objects
Reaction: OFF2 (NONE, OFF1, OFF3)
Acknowledge: IMMEDIATELY
Cause: The memory card and the device type do not match (e.g. a memory card for SINAMICS S is inserted in SINAMICS G).
Remedy: - insert the matching memory card.
- use the matching Control Unit or power unit.

F01054 CU: System limit exceeded

Message value: %1
Drive object: All objects
Reaction: OFF2
Acknowledge: IMMEDIATELY
Cause: At least one system overload has been identified.
Fault value (r0949, interpret decimal):
1: Computing time load too high (r9976[1]).
5: Peak load too high (r9976[5]).
See also: r9976 (System utilization)
Remedy: Re fault value = 1, 5:
- reduce the computing time load of the drive unit (r9976[1] and r9976[5]) to under 100 %.
- check the sampling times and adjust if necessary (p0115, p0799, p4099).
- de-activate function modules.
- de-activate drive objects.
- remove drive objects from the target topology.
- note the DRIVE-CLiQ topology rules and if required, change the DRIVE-CLiQ topology.
When using the Drive Control Chart (DCC) or free function blocks (FBLOCKS), the following applies:
- the computing time load of the individual run-time groups on a drive object can be read out in r21005 (DCC) or r20005 (FBLOCKS).
- if necessary, the assignment of the run-time group (p21000, p20000) can be changed in order to increase the sampling time (r21001, r20001).
- if necessary, reduce the number of cyclically calculated blocks (DCC) and/or function blocks (FBLOCKS).

A01064 (F) CU: Internal error (CRC)

Message value: -
Drive object: All objects
Reaction: NONE
Acknowledge: NONE
Cause: CRC error in the Control Unit program memory

Remedy: - carry out a POWER ON (power off/on) for all components.
- upgrade firmware to later version.
- contact the Hotline.

Reaction upon F: NONE (OFF1, OFF2, OFF3, STOP2)

Acknowl. upon F: IMMEDIATELY (POWER ON)

F01068 CU: Data memory memory overflow

Message value: %1

Drive object: All objects

Reaction: OFF2

Acknowledge: IMMEDIATELY

Cause: A data memory area has been overloaded.
Fault value (r0949, interpret binary):
Bit 0 = 1: High-speed data memory 1 overloaded
Bit 1 = 1: High-speed data memory 2 overloaded
Bit 2 = 1: High-speed data memory 3 overloaded
Bit 3 = 1: High-speed data memory 4 overloaded

Remedy: - de-activate the function module.
- de-activate drive object.
- remove the drive object from the target topology.

A01069 Parameter backup and device incompatible

Message value: -

Drive object: CU_S110-CAN, CU_S110-DP, CU_S110-PN

Reaction: NONE

Acknowledge: NONE

Cause: The parameter backup on the memory card and the device type do not match (e.g. a memory card with the parameter backup of a SINAMICS DCM is inserted in SINAMICS G110).
The module boots with the factory settings.

Remedy: - insert a memory card with compatible parameter backup and carry out a POWER ON.
- insert a memory card without parameter backup and carry out a POWER ON.
- remove the memory card and carry out POWER ON.
- save the parameters (p0977 = 1).

A01069 Parameter backup and device incompatible

Message value: -

Drive object: SERVO_S110-CAN, SERVO_S110-DP, SERVO_S110-PN

Reaction: NONE

Acknowledge: NONE

Cause: The parameter backup on the memory card and the device type do not match (e.g. a memory card with the parameter backup of a SINAMICS S120 is inserted in SINAMICS G150).
The module boots with the factory settings.

Remedy: - insert a memory card with compatible parameter backup and carry out a POWER ON.
- insert a memory card without parameter backup and carry out a POWER ON.
- save the parameters (p0977 = 1).

A01099 Tolerance window of time synchronization exited

Message value: -

Drive object: All objects

Reaction: NONE

Acknowledge: NONE

Cause: The time master exited the selected tolerance window for time synchronization.
See also: p3109 (RTC real time synchronization tolerance window)

Remedy: Select the re-synchronization interval so that the synchronization deviation between the time master and drive system lies within the tolerance window.
See also: r3108 (RTC last synchronization deviation)

F01105 (A) CU: Insufficient memory

Message value: %1
Drive object: All objects
Reaction: OFF1
Acknowledge: POWER ON
Cause: Too many functions have been configured on this Control Unit (e.g. too many drives, function modules, data sets, OA applications, blocks, etc).
Fault value (r0949, interpret decimal):
Only for internal Siemens troubleshooting.
Remedy: - change the configuration on this Control Unit (e.g. fewer drives, function modules, data sets, OA applications, blocks, etc).
- use an additional Control Unit.
Reaction upon A: NONE
Acknowl. upon A: NONE

F01107 CU: Data save in the non-volatile memory unsuccessful

Message value: %1
Drive object: All objects
Reaction: NONE
Acknowledge: IMMEDIATELY
Cause: A data save in the non-volatile memory was not able to be successfully carried out.
- non-volatile memory is defective.
- insufficient space in the non-volatile memory.
Fault value (r0949, interpret decimal):
Only for internal Siemens troubleshooting.
Remedy: - try to save again.
- replace the memory card or Control Unit.

F01112 CU: Power unit not permissible

Message value: %1
Drive object: All objects
Reaction: NONE
Acknowledge: IMMEDIATELY
Cause: The connected power unit cannot be used together with this Control Unit.
Fault value (r0949, interpret decimal):
1: Power unit is not supported (e.g. PM240).
2: DC/AC power unit connected to CU310 not permissible.
Remedy: Replace the power unit that is not permissible by a component that is permissible.

F01120 (A) Terminal initialization has failed

Message value: %1
Drive object: All objects
Reaction: OFF1 (OFF2)
Acknowledge: IMMEDIATELY (POWER ON)
Cause: An internal software error occurred while the terminal functions were being initialized.
Fault value (r0949, interpret hexadecimal):
Only for internal Siemens troubleshooting.
Remedy: - carry out a POWER ON (power off/on) for all components.
- upgrade firmware to later version.
- contact the Hotline.
- replace the Control Unit.
Reaction upon A: NONE
Acknowl. upon A: NONE

F01122 (A) Frequency at the measuring probe input too high

Message value: %1
Drive object: All objects
Reaction: OFF1 (OFF2)
Acknowledge: IMMEDIATELY
Cause: The frequency of the pulses at the measuring probe input is too high.
Fault value (r0949, interpret decimal):
1: DI/DO 9 (X122.8)
2: DI/DO 10 (X122.10)
4: DI/DO 11 (X122.11)
8: DI/DO 13 (X132.8)
16: DI/DO 14 (X132.10)
32: DI/DO 15 (X132.11)
64: DI/DO 8 (X122.7)
128: DI/DO 12 (X132.7)
Remedy: Reduce the frequency of the pulses at the measuring probe input.
Reaction upon A: NONE
Acknowl. upon A: NONE

F01150 CU: Number of instances of a drive object type exceeded

Message value: Drive object type: %1, number permitted: %2, actual number: %3
Drive object: All objects
Reaction: NONE
Acknowledge: IMMEDIATELY
Cause: The maximum permissible number of instances of a drive object type was exceeded.
Fault value (r0949, interpret hexadecimal):
ddccbbaa hex:
aa: Drive object type (p0107), for which the maximum permissible number of instances was exceeded.
bb: Max. permissible number of instances for this drive object type.
cc: Actual number of instances for this drive object type.
dd: No significance.
Remedy: - power down the unit.
- suitably restrict the number of instances of a drive object type by reducing the number of inserted components.
- re-commission the unit.

F01200 CU: Time slice management internal software error

Message value: %1
Drive object: All objects
Reaction: OFF2
Acknowledge: IMMEDIATELY (POWER ON)
Cause: A time slice management error has occurred.
It is possible that the sampling times have been inadmissibly set.
Fault value (r0949, interpret hexadecimal):
998:
Too many time slices occupied by OA (e.g. DCC).
999:
Too many time slices occupied by the basic system. Too many different sampling times may have been set.
Additional values:
Only for internal Siemens troubleshooting.
Remedy: - check the sampling time setting (p0112, p0115, p4099).
- contact the Hotline.

F01205 CU: Time slice overflow

Message value: %1
Drive object: All objects
Reaction: OFF2
Acknowledge: POWER ON
Cause: Insufficient processing time is available for the existing topology.
Fault value (r0949, interpret hexadecimal):
Only for internal Siemens troubleshooting.
Remedy: - reduce the number of drives.
- increase the sampling times.

A01224 CU: Pulse frequency inconsistent

Message value: %1
Drive object: All objects
Reaction: NONE
Acknowledge: NONE
Cause: When changing the minimum pulse frequency (p0113) inconsistency between the pulse frequencies was identified.
Alarm value (r2124, interpret decimal):
1: Value lower than minimum value.
2: Value higher than maximum value.
3: Resulting sampling time is not a multiple of 1.25 µs.
4: Value does not match clock-cycle synchronous PROFIBUS operation.
10: Special restriction of the drive object violated.
99: Inconsistency of cross drive objects detected.
116: Recommended clock cycle in r0116[0...1].
Remedy: Set a valid pulse frequency.

F01250 CU: CU-EEPROM incorrect read-only data

Message value: %1
Drive object: All objects
Reaction: NONE (OFF2)
Acknowledge: POWER ON
Cause: Error when reading the read-only data of the EEPROM in the Control Unit.
Fault value (r0949, interpret decimal):
Only for internal Siemens troubleshooting.
Remedy: - carry out a POWER ON.
- replace the Control Unit.

A01251 CU: CU-EEPROM incorrect read-write data

Message value: %1
Drive object: All objects
Reaction: NONE
Acknowledge: NONE
Cause: Error when reading the read-write data of the EEPROM in the Control Unit.
Alarm value (r2124, interpret decimal):
Only for internal Siemens troubleshooting.
Remedy: For alarm value r2124 < 256, the following applies:
- carry out a POWER ON.
- replace the Control Unit.
For alarm value r2124 >= 256, the following applies:
- for the drive object with this alarm, clear the fault memory (p0952 = 0).
- as an alternative, clear the fault memory of all drive objects (p2147 = 1).
- replace the Control Unit.

F01303 DRIVE-CLiQ component does not support the required function

Message value: %1
Drive object: All objects
Reaction: OFF2
Acknowledge: IMMEDIATELY
Cause: A function requested by the Control Unit is not supported by a DRIVE-CLiQ component.
Fault value (r0949, interpret decimal):
1: The component does not support the de-activation.
101: The Motor Module does not support an internal armature short-circuit.
102: The Motor Module does not support the de-activation.
201: The Sensor Module does not support actual value inversion (p0410.0 = 1) when using a Hall sensor (p0404.6 = 1) for the commutation.
202: The Sensor Module does not support parking/unparking.
203: The Sensor Module does not support the de-activation.
204: The firmware of this Terminal Module 15 (TM15) does not support the application TM15DI/DO.
205: The Sensor Module does not support the selected temperature evaluation (r0458).
206: The firmware of this Terminal Modules TM41/TM31/TM15 refers to an old firmware version. It is urgently necessary to upgrade the firmware to ensure disturbance-free operation.
207: The power unit with this hardware version does not support operation with device supply voltages of less than 380 V.
208: The Sensor Module does not support de-selection of commutation with zero mark (via p0430.23).
211: The Sensor Module does not support single-track encoders (r0459.10).
212: The Sensor Module does not support LVDT sensors (p4677.0).
213: The Sensor Module does not support the characteristic type (p4662).
Remedy: Upgrade the firmware of the DRIVE-CLiQ component involved.
For fault value = 205:
Check parameter p0600 and p0601 and if required, adapt interpretation.
For fault value = 207:
Replace the power unit or if required set the device supply voltage higher (p0210).
For fault value = 208:
Check parameter p0430.23 and reset if necessary.

A01304 (F) Firmware version of DRIVE-CLiQ component is not up-to-date

Message value: %1
Drive object: All objects
Reaction: NONE
Acknowledge: NONE
Cause: The non-volatile memory has a more recent firmware version than the one in the connected DRIVE-CLiQ component.
Alarm value (r2124, interpret decimal):
Component number of the DRIVE-CLiQ component involved.
Remedy: Update the firmware (p7828, p7829 and commissioning software).
Reaction upon F: NONE
Acknowl. upon F: IMMEDIATELY

F01305 Topology: Component number missing

Message value: %1
Drive object: All objects
Reaction: NONE
Acknowledge: IMMEDIATELY
Cause: The component number from the topology was not parameterized (p0121 (for power unit, refer to p0107), p0131 (for servo drive, refer to p0107), p0141).
Fault value (r0949, interpret decimal):
Data set number.

Note:
The fault also occurs if speed encoders have been configured (p0187, p0188) but no component numbers exist for them.
In this case, the fault value includes the drive data set number plus 100 * encoder number (e.g. 2xx, if a component number was not entered in p0141 for the second encoder (p0188)).
See also: p0121, p0131, p0141, p0142, p0186, p0187, p0188

Remedy: Enter the missing component number or remove the component and restart commissioning.
See also: p0121, p0131, p0141, p0142, p0186, p0187, p0188

A01306 Firmware of the DRIVE-CLiQ component being updated

Message value: %1
Drive object: All objects
Reaction: NONE
Acknowledge: NONE
Cause: Firmware update is active for at least one DRIVE-CLiQ component.
Alarm value (r2124, interpret decimal):
Component number of the DRIVE-CLiQ component.
Remedy: Not necessary.
This alarm automatically disappears after the firmware has been updated.

A01314 Topology: Component must not be present

Message value: Component number: %1, Component class: %2, Connection number: %3
Drive object: All objects
Reaction: NONE
Acknowledge: NONE
Cause: For a component, "de-activate and not present" is set but this component is still in the topology.
Alarm value (r2124, interpret hexadecimal):
ddccbbaa hex:
aa = component number
bb = component class of the component
cc = connection number
Note:
Component class and connection number are described in F01375.
Remedy: - remove the corresponding component.
- change the setting "de-activate and not present".
Note:
Under "Topology --> Topology view" the commissioning software where relevant offers improved diagnostics capability (e.g. setpoint/actual value comparison).
See also: p0145 (Activate/de-activate encoder interface)

A01315 Drive object not ready for operation

Message value: -
Drive object: All objects
Reaction: NONE
Acknowledge: NONE
Cause: For the active drive object involved, at least one activated component is missing.
Note:
All other active and operational drive objects can be in the "RUN" state.
Remedy: The alarm automatically disappears again with the following actions:
- de-activate the drive object involved (p0105 = 0).
- de-activate the components involved (p0125 = 0, p0145 = 0, p0155 = 0, p0165 = 0).
- re-insert the components involved.
See also: p0145 (Activate/de-activate encoder interface)

A01316 Drive object inactive and again ready for operation

Message value: -
Drive object: All objects
Reaction: NONE
Acknowledge: NONE
Cause: If, when inserting a component of the target topology, an inactive, non-operational drive object becomes operational again. The associated parameter of the component is, in this case, set to "activate" (p0125, p0145, p0155, p0165).
Note:
This is the only message that is displayed for a de-activated drive object.
Remedy: The alarm automatically disappears again with the following actions:
- activate the drive object involved (p0105 = 1).
- again withdraw the components involved.

A01317 (N) De-activated component again present

Message value: -
Drive object: All objects
Reaction: NONE
Acknowledge: NONE
Cause: If a component of the target topology for an active drive object is inserted and the associated parameter of the component is set to "de-activate" (p0125, p0145, p0155, p0165).
Note:
This is the only message that is displayed for a de-activated component.
Remedy: The alarm automatically disappears again with the following actions:
- activate the components involved (p0125 = 1, p0145 = 1, p0155 = 1, p0165 = 1).
- again withdraw the components involved.
See also: p0145 (Activate/de-activate encoder interface)
Reaction upon N: NONE
Acknowl. upon N: NONE

A01318 BICO: De-activated interconnections present

Message value: %1
Drive object: All objects
Reaction: NONE
Acknowledge: NONE
Cause: This alarm is used in the following cases:
- If an inactive/non-operational drive object is active again/ready for operation
- If there are items in the list of BI/CI parameters (r9498[0...29], r9499[0...29])
- If the BICO interconnections saved in the list of BI/CI parameters (r9498[0...29], r9499[0...29]) have actually been changed
Remedy: Reset alarm:
- Set p9496 to 1 or 2
or
- de-activate the drive object again.

A01319 Inserted component not initialized

Message value: -
Drive object: SERVO_S110-CAN, SERVO_S110-DP, SERVO_S110-PN
Reaction: NONE
Acknowledge: NONE
Cause: Initialization is required for at least one inserted component.
This is only possible if the pulses are inhibited for all the drive objects.
Remedy: Activate pulse inhibit for all drive objects.

A01320 Topology: Drive object number does not exist in configuration

Message value: %1
Drive object: All objects
Reaction: NONE
Acknowledge: NONE
Cause: A drive object number is missing in p0978
Alarm value (r2124, interpret decimal):
Index of p0101 under which the missing drive object number can be determined.
Remedy: Set p0009 to 1 and change p0978:
Rules:
- p0978 must include all of the drive object numbers (p0101).
- it is not permissible for a drive object number to be repeated.
- by entering a 0, the drive objects with PZD are separated from those without PZD.
- only 2 partial lists are permitted. After the second 0, all values must be 0.
- dummy drive object numbers (255) are only permitted in the first partial list.

A01321 Topology: Drive object number does not exist in configuration

Message value: %1
Drive object: All objects
Reaction: NONE
Acknowledge: NONE
Cause: p0978 contains a drive object number that does not exist.
Alarm value (r2124, interpret decimal):
Index of p0978 under which the drive object number can be determined.
Remedy: Set p0009 to 1 and change p0978:
Rules:
- p0978 must include all of the drive object numbers (p0101).
- it is not permissible for a drive object number to be repeated.
- by entering a 0, the drive objects with PZD are separated from those without PZD.
- only 2 partial lists are permitted. After the second 0, all values must be 0.
- dummy drive object numbers (255) are only permitted in the first partial list.

A01322 Topology: Drive object number present twice in configuration

Message value: %1
Drive object: All objects
Reaction: NONE
Acknowledge: NONE
Cause: A drive object number is present more than once in p0978.
Alarm value (r2124, interpret decimal):
Index of p0978 under which the involved drive object number is located.
Remedy: Set parameter p0009 = 1 and change p0978:
Rules:
- p0978 must include all of the drive object numbers (p0101).
- it is not permissible for a drive object number to be repeated.
- by entering a 0, the drive objects with PZD are separated from those without PZD.
- only 2 partial lists are permitted. After the second 0, all values must be 0.
- dummy drive object numbers (255) are only permitted in the first partial list.

A01323 Topology: More than two partial lists created

Message value: %1
Drive object: All objects
Reaction: NONE
Acknowledge: NONE
Cause: Partial lists are available more than twice in p0978. After the second 0, all must be 0.

Alarm value (r2124, interpret decimal):
Index of p0978 under which the illegal value is located.

Remedy: Set p0009 to 1 and change p0978:
Rules:
- p0978 must include all of the drive object numbers (p0101).
- it is not permissible for a drive object number to be repeated.
- by entering a 0, the drive objects with PZD are separated from those without PZD.
- only 2 partial lists are permitted. After the second 0, all values must be 0.
- dummy drive object numbers (255) are only permitted in the first partial list.

A01324 Topology: Dummy drive object number incorrectly created

Message value: %1
Drive object: All objects
Reaction: NONE
Acknowledge: NONE
Cause: In p0978, dummy drive object numbers (255) are only permitted in the first partial list.
Alarm value (r2124, interpret decimal):
Index of p0978 under which the illegal value is located.
Remedy: Set p0009 to 1 and change p0978:
Rules:
- p0978 must include all of the drive object numbers (p0101).
- it is not permissible for a drive object number to be repeated.
- by entering a 0, the drive objects with PZD are separated from those without PZD.
- only 2 partial lists are permitted. After the second 0, all values must be 0.
- dummy drive object numbers (255) are only permitted in the first partial list.

F01325 Topology: Component number not present in target topology

Message value: Component number: %1
Drive object: All objects
Reaction: NONE
Acknowledge: IMMEDIATELY
Cause: The component configured in a parameter (e.g. p0121, p0131, etc.) is not present in the target topology.
Alarm value (r2124, interpret decimal):
Configured component number that is not present in target topology.
Remedy: Establish topology and DO configuration consistency.

A01330 Topology: Quick commissioning not possible

Message value: Fault cause: %1, supplementary information: %2, preliminary component number: %3
Drive object: All objects
Reaction: NONE
Acknowledge: NONE
Cause: Unable to carry out a quick commissioning. The existing actual topology does not fulfill the requirements.
Alarm value (r2124, interpret hexadecimal):
ccccbbaa hex: cccc = preliminary component number, bb = supplementary information, aa = fault cause
aa = 01 hex = 1 dec:
On one component illegal connections were detected.
- bb = 01 hex = 1 dec: For a Motor Module, more than one motor with DRIVE-CLiQ was detected.
- bb = 02 hex = 2 dec: For a motor with DRIVE-CLiQ, the DRIVE-CLiQ cable is not connected to a Motor Module.
aa = 02 hex = 2 dec:
The topology contains too many components of a particular type.
- bb = 01 hex = 1 dec: There is more than one master Control Unit.
- bb = 02 hex = 2 dec: There is more than 1 infeed (8 for a parallel circuit configuration).
- bb = 03 hex = 3 dec: There are more than 10 Motor Modules (8 for a parallel circuit configuration).
- bb = 04 hex = 4 dec: There are more than 9 encoders.
- bb = 05 hex = 5 dec: There are more than 8 Terminal Modules.

- bb = 07 hex = 7 dec: Unknown component type
- bb = 08 hex = 8 dec: There are more than 6 drive slaves.
- bb = 09 hex = 9 dec: Connection of a drive slave not permitted.
- bb = 0a hex = 10 dec: There is no drive master.
- bb = 0b hex = 11 dec: There is more than one motor with DRIVE-CLiQ for a parallel circuit.
- bb = 0c hex = 12 dec: Different power units are being used in a parallel connection.
- cccc: Not used.

aa = 03 hex = 3 dec:

More than 16 components are connected at a DRIVE-CLiQ socket of the Control Unit.

- bb = 0, 1, 2, 3 means e.g. detected at the DRIVE-CLiQ socket X100, X101, X102, X103.
- cccc: Not used.

aa = 04 hex = 4 dec:

The number of components connected one after the other is greater than 125.

- bb: Not used.
- cccc = preliminary component number of the first component and component that resulted in the fault.

aa = 05 hex = 5 dec:

The component is not permissible for SERVO.

- bb = 01 hex = 1 dec: SINAMICS G available.
- bb = 02 hex = 2 dec: Chassis available.
- cccc = preliminary component number of the first component and component that resulted in the fault.

aa = 06 hex = 6 dec:

On one component illegal EEPROM data was detected. These must be corrected before the system continues to boot.

- bb = 01 hex = 1 dec: The Order No. [MLFB] of the power unit that was replaced includes a space retainer. The space retainer (*) must be replaced by a correct character.
- cccc = preliminary component number of the component with illegal EEPROM data.

aa = 07 hex = 7 dec:

The actual topology contains an illegal combination of components.

- bb = 01 hex = 1 dec: Active Line Module (ALM) and Basic Line Module (BLM).
- bb = 02 hex = 2 dec: Active Line Module (ALM) and Smart Line Module (SLM).
- bb = 03 hex = 3 dec: SIMOTION control (e.g. SIMOTION D445) and SINUMERIK component (e.g. NX15).
- bb = 04 hex = 4 dec: SINUMERIK control (e.g. SINUMERIK 730.net) and SIMOTION component (e.g. CX32).
- cccc: Not used.

Note:

Connection type and connection number are described in F01375.

See also: p0097 (Select drive object type)

Remedy:

- adapt the output topology to the permissible requirements.
- carry out commissioning using the commissioning software.
- for motors with DRIVE-CLiQ, connect the power and DRIVE-CLiQ cable to the same Motor Module (Single Motor Module: DRIVE-CLiQ at X202, Double Motor Module: DRIVE-CLiQ from motor 1 (X1) to X202, from motor 2 (X2) to X203).

Re aa = 06 hex = 6 dec and bb = 01 hex = 1 dec:

Correct the order number when commissioning using the commissioning software.

See also: p0097 (Select drive object type)

A01331 Topology: At least one component not assigned to a drive object

Message value: Component number: %1

Drive object: All objects

Reaction: NONE

Acknowledge: NONE

Cause: At least one component is not assigned to a drive object.

- when commissioning, a component was not able to be automatically assigned to a drive object.
- the parameters for the data sets are not correctly set.

Alarm value (r2124, interpret decimal):

Component number of the unassigned component.

Remedy: This component is assigned to a drive object.
Check the parameters for the data sets.
Examples:
- power unit (p0121).
- motor (p0131, p0186).
- encoder interface (p0140, p0141, p0187, p0188).
- encoder (p0140, p0142, p0187, p0188).

F01354 Topology: Actual topology indicates an illegal component

Message value: Fault cause: %1, component number: %2
Drive object: All objects
Reaction: OFF2
Acknowledge: IMMEDIATELY
Cause: The actual topology indicates at least one illegal component.
Fault value (r0949, interpret hexadecimal):
yyxx hex: yy = component number, xx = cause.
xx = 1: Component at this Control Unit not permissible.
xx = 2: Component in combination with another component not permissible.
Note:
Pulse enable is prevented.
Remedy: Remove the illegal components and restart the system.

F01355 Topology: Actual topology changed

Message value: %1
Drive object: All objects
Reaction: NONE
Acknowledge: IMMEDIATELY
Cause: The device target topology (p0099) does not correspond to the device actual topology (r0098).
The fault only occurs if the topology was commissioned using the automatic internal device mechanism and not using the commissioning software.
Fault value (r0949, interpret decimal):
Only for internal Siemens troubleshooting.
Remedy: One of the following counter-measures can be selected if no faults have occurred in the topology detection itself:
If commissioning is still not completed:
- carry out a self-commissioning routine (starting from p0009 = 1).
In general:
Set p0099 = r0098, set p0009 = 0; for existing Motor Modules, this results in servo drives being automatically generated (p0107).
Generating servo drives: Set p0097 to 1, set p0009 to 0.
Generating vector drives: Set p0097 to 2, set p0009 to 0.
Generating vector drives with parallel circuit: Set p0097 to 12, set p0009 to 0.
In order to set configurations in p0108, before setting p0009 to 0, it is possible to first set p0009 to 2 and modify p0108. The index corresponds to the drive object (p0107).
If commissioning has already been completed:
- re-establish the original connections and re-connect power to the Control Unit.
- restore the factory setting for the complete equipment (all of the drives) and allow automatic self-commissioning again.
- change the device parameterization to match the connections (this is only possible using the commissioning software).
Notice:
Topology changes that result in this fault being generated cannot be accepted by the automatic function in the device, but must be transferred using the commissioning software and parameter download. The automatic function in the device only allows constant topology to be used. Otherwise, when the topology is changed, all of the previous parameter settings are lost and replaced by the factory setting.

F01356 Topology: Defective components in actual topology

Message value: Fault cause: %1, Component number: %2, Connection number: %3

Drive object: All objects

Reaction: OFF2

Acknowledge: IMMEDIATELY

Cause: The actual topology indicates at least one defective DRIVE-CLiQ component.
Fault value (r0949, interpret hexadecimal):
zzyyxx hex:
zz = connection number of component before the defective component
yy = component number of component before the defective component
xx = fault cause
xx = 1: Component at this Control Unit not permissible.
Note:
Pulse enable is withdrawn and prevented.

Remedy: Remove the defective components and restart the system.

F01360 Topology: Actual topology not permissible

Message value: Fault cause: %1, preliminary component number: %2

Drive object: All objects

Reaction: NONE

Acknowledge: IMMEDIATELY

Cause: The detected actual topology is not permissible.
Fault value (r0949, interpret hexadecimal):
ccccbbaa hex: cccc = preliminary component number, aa = fault cause
aa = 01 hex = 1 dec:
Too many components were detected at the Control Unit. A maximum of 199 components is permissible.
aa = 02 hex = 2 dec:
The component type of a component is not known.
aa = 03 hex = 3 dec:
It is illegal to combine ALM and BLM.
aa = 04 hex = 4 dec:
It is illegal to combine ALM and SLM.
aa = 05 hex = 5 dec:
It is illegal to combine BLM and SLM.
aa = 06 hex = 6 dec:
A CX32 was not directly connected to a permitted Control Unit.
aa = 07 hex = 7 dec:
An NX10 or NX15 was not directly connected to a permitted Control Unit.
aa = 08 hex = 8 dec:
A component was connected to a Control Unit that is not permitted for this purpose.
aa = 09 hex = 9 dec:
A component was connected to a Control Unit with out-of-date firmware.
aa = 0A hex = 10 dec:
Too many components of a particular type detected.
aa = 0B hex = 11 dec:
Too many components of a particular type detected on a single line.
Note:
The drive system is no longer booted. In this state, the drive control (closed-loop) cannot be enabled.

Remedy: Re fault cause = 1:
Change the configuration. Connect less than 199 components to the Control Unit.
Re fault cause = 2:
Remove the component with unknown component type.
Re fault cause = 3, 4, 5:
Establish a valid combination.

Re fault cause = 6, 7:
Connect the expansion module directly to a permitted Control Unit.
Re fault cause = 8:
Remove component or use a permissible component.
Re fault cause = 9:
Upgrade the firmware of the Control Unit to a later version.
Re fault cause = 10, 11:
Reduce the number of components.

A01361 Topology: Actual topology contains SINUMERIK and SIMOTION components

Message value: %1
Drive object: All objects
Reaction: NONE
Acknowledge: NONE
Cause: The detected actual topology contains SINUMERIK and SIMOTION components.
The drive system is no longer booted. In this state, the drive control (closed-loop) cannot be enabled.
Alarm value (r2124, interpret hexadecimal):
ddccbbaa hex: cc = fault cause, bb = component class of the actual topology, aa = component number of the component
cc = 01 hex = 1 dec:
An NX10 or NX15 was connected to a SIMOTION control.
cc = 02 hex = 2 dec:
A CX32 was connected to a SINUMERIK control.
Remedy: Re alarm value = 1:
Replace all NX10 or NX15 by a CX32.
Re alarm value = 2:
Replace all CX32 by an NX10 or NX15.

F01380 Topology: Actual topology, defective EEPROM

Message value: Preliminary component number: %1
Drive object: All objects
Reaction: NONE
Acknowledge: POWER ON
Cause: When detecting the actual topology, a component with a defective EEPROM was detected.
Fault value (r0949, interpret hexadecimal):
bbbbaaaa hex:
aaaa = preliminary component number of the defective components
Remedy: Output the fault value and remove the defected component.

A01416 Topology: Comparison additional component in actual topology

Message value: Component number: %1, Component class: %2, Connection number: %3
Drive object: All objects
Reaction: NONE
Acknowledge: NONE
Cause: The topology comparison has found a component in the actual topology which is not specified in the target topology.
The alarm value includes the component number and connection number of the component with which the additional component is connected.
Alarm value (r2124, interpret hexadecimal):
ddccbbaa hex:
cc = connection number
bb = component class of the additional component
aa = component number
Note:
- components that are connected to this additional component are not operational.

Remedy: Adapting the topologies:
- remove the additional component in the actual topology.
- download the target topology that matches the actual topology (commissioning software).

A01420 Topology: Comparison a component is different

Message value: Component number: %1, component class target: %2, component class actual: %3, fault cause: %4
Drive object: All objects
Reaction: NONE
Acknowledge: NONE
Cause: The topology comparison has detected differences in the actual and target topologies in relation to one component. There are differences in the electronic rating plate.
Alarm value (r2124, interpret hexadecimal):
ddccbbaa hex: aa = component number of the component, bb = component class of the target topology, cc = component class of the actual topology, dd = fault cause
dd = 01 hex = 1 dec:
Different component type.
dd = 02 hex = 2 dec:
Different Order No.
dd = 03 hex = 3 dec:
Different manufacturer.
Note:
Component class and component type are described in F01375.
The drive system is no longer booted. In this state, the drive control (closed-loop) cannot be enabled.
Remedy: Adapting the topologies:
- check the component soft-wired connections against the hardware configuration of the drive unit in the commissioning software and correct differences.

A01425 Topology: Comparison serial number of a component is different

Message value: Component number: %1, Component class: %2, Differences: %3
Drive object: All objects
Reaction: NONE
Acknowledge: NONE
Cause: The topology comparison has detected differences in the actual and target topologies in relation to one component. The serial number is different.
Alarm value (r2124, interpret hexadecimal):
ddccbbaa hex:
cc = number of differences
bb = component class
aa = component number of the component
Note:
The component class is described in F01375.
The drive system is no longer booted. In this state, the drive control (closed-loop) cannot be enabled.
Remedy: Adapting the topologies:
- change over the actual topology to match the target topology.
- download the target topology that matches the actual topology (commissioning software).
Re byte cc:
cc = 1 --> can be acknowledged using p9904 or p9905.
cc > 1 --> can be acknowledged using p9905 and can be de-activated using p9906 or p9907/p9908.
Note:
Under "Topology --> Topology view" the commissioning software where relevant offers improved diagnostics capability (e.g. setpoint/actual value comparison).
See also: p9904 (Topology comparison acknowledge differences), p9905 (Device specialization)

F01451 Topology: Target topology is invalid

Message value: %1
Drive object: All objects
Reaction: NONE
Acknowledge: IMMEDIATELY
Cause: An error was detected in the target topology.
The target topology is invalid.
Fault value (r0949, interpret hexadecimal):
ccccbbaa hex: cccc = index error, bb = component number, aa = fault cause
aa = 1B hex = 27 dec: Error not specified.
aa = 1C hex = 28 dec: Value illegal.
aa = 1D hex = 29 dec: Incorrect ID.
aa = 1E hex = 30 dec: Incorrect ID length.
aa = 1F hex = 31 dec: Too few indices left.
aa = 20 hex = 32 dec: component not connected to Control Unit.
Remedy: Reload the target topology using the commissioning software.

F01475 Topology: Target topology duplicate connection between two components

Message value: Component number: %1, Component class: %2, Connection number1: %3, Connection number2: %4
Drive object: CU_S110-CAN, CU_S110-DP, CU_S110-PN
Reaction: NONE
Acknowledge: IMMEDIATELY
Cause: When writing the target topology, a duplicate connection between two components was detected.
Fault value (r0949, interpret hexadecimal):
ddccbbaa hex:
dd = connection number 2 of the duplicate connection
cc = connection number 1 of the duplicate connection
bb = component class
aa = component number of one of the components connected twice
Note:
Component class and connection number are described in F01375.
Remedy: Read out the fault value and remove one of the two specified connections.
Then download the target topology again using the commissioning software.
Note:
Under "Topology --> Topology view" the commissioning software where relevant offers improved diagnostics capability (e.g. setpoint/actual value comparison).

A01481 Topology: Comparison power unit missing in the actual topology

Message value: Component number: %1
Drive object: All objects
Reaction: NONE
Acknowledge: NONE
Cause: The topology comparison has detected a power unit in the target topology that is not available in the actual topology.
Alarm value (r2124, interpret decimal):
Component number of the additional target components.
Remedy: - delete the drive belonging to the power unit in the commissioning software project and download the new configuration to the drive unit.
- check that the actual topology matches the target topology and if required, change over.
- check DRIVE-CLiQ cables for interruption and contact problems.
- check the 24 V supply voltage.
- check that the power unit is working properly.
Note:
Under "Topology --> Topology view" the commissioning software where relevant offers improved diagnostics capability (e.g. setpoint/actual value comparison).

A01482 Topology: Comparison Sensor Module missing in the actual topology

Message value: Component number: %1

Drive object: All objects

Reaction: NONE

Acknowledge: NONE

Cause: The topology comparison has detected a Sensor Module in the target topology that is not available in the actual topology.

Alarm value (r2124, interpret decimal):

Component number of the additional target components.

Remedy: - re-configure the drive belonging to the Sensor Module in the commissioning software project (encoder configuration) and download the new configuration to the drive unit.

- delete the drive belonging to the Sensor Module in the commissioning software project and download the new configuration to the drive unit.
- check that the actual topology matches the target topology and if required, change over.
- check DRIVE-CLiQ cables for interruption and contact problems.
- check the 24 V supply voltage.
- check that the Sensor Module is working properly.

Note:

Under "Topology --> Topology view" the commissioning software where relevant offers improved diagnostics capability (e.g. setpoint/actual value comparison).

A01483 Topology: Comparison Terminal Module missing in the actual topology

Message value: Component number: %1

Drive object: CU_S110-CAN, CU_S110-DP, CU_S110-PN

Reaction: NONE

Acknowledge: NONE

Cause: The topology comparison has detected a Terminal Module in the target topology that is not available in the actual topology.

Alarm value (r2124, interpret decimal):

Component number of the additional target components.

Remedy: - delete the Terminal Module in the commissioning software project and download the new configuration to the drive unit.

- check that the actual topology matches the target topology and if required, change over.
- check DRIVE-CLiQ cables for interruption and contact problems.
- check the 24 V supply voltage.
- check that the Terminal Module is working properly.

Note:

Under "Topology --> Topology view" the commissioning software where relevant offers improved diagnostics capability (e.g. setpoint/actual value comparison).

A01484 Topology: Comparison DRIVE-CLiQ Hub Module missing in the actual topology

Message value: Component number: %1

Drive object: CU_S110-CAN, CU_S110-DP, CU_S110-PN

Reaction: NONE

Acknowledge: NONE

Cause: The topology comparison has detected a DRIVE-CLiQ Hub Module in the target topology that does not exist in the actual topology.

Alarm value (r2124, interpret decimal):

Component number of the additional target components.

Remedy: - delete the DRIVE-CLiQ Hub Module in the commissioning software project and download the new configuration to the drive unit.

- check that the actual topology matches the target topology and if required, change over.
- check DRIVE-CLiQ cables for interruption and contact problems.
- check the 24 V supply voltage.
- test the DRIVE-CLiQ Hub Module to ensure that it functions properly.

Note:
Under "Topology --> Topology view" the commissioning software where relevant offers improved diagnostics capability (e.g. setpoint/actual value comparison).

A01486 Topology: Comparison DRIVE-CLiQ components missing in the actual topology

Message value: Component number: %1
Drive object: All objects
Reaction: NONE
Acknowledge: NONE
Cause: The topology comparison has detected a DRIVE-CLiQ component in the target topology that is not available in the actual topology.
Alarm value (r2124, interpret decimal):
Component number of the additional target components.
Remedy: - delete the drive belonging to this component in the commissioning software project and download the new configuration to the drive unit.
- re-configure the drive belonging to this component in the commissioning software project and download the new configuration to the drive unit.
- check that the actual topology matches the target topology and if required, change over.
- check DRIVE-CLiQ cables for interruption and contact problems.
- check the 24 V supply voltage.
- check that the component is working properly.
Note:
Under "Topology --> Topology view" the commissioning software where relevant offers improved diagnostics capability (e.g. setpoint/actual value comparison).

A01487 Topology: Comparison option slot components missing in the actual topology

Message value: Component number: %1
Drive object: CU_S110-CAN, CU_S110-DP, CU_S110-PN
Reaction: NONE
Acknowledge: NONE
Cause: The topology comparison has detected an option slot module in the target topology that is not available in the actual topology.
Alarm value (r2124, interpret decimal):
Component number of the additional target components.
Remedy: - delete the option board in the commissioning software project and download the new configuration to the drive unit.
- re-configure the drive unit in the commissioning software project and download the new configuration to the drive unit.
- check that the actual topology matches the target topology and if required, change over.
- check that the option board is functioning correctly
Note:
Under "Topology --> Topology view" the commissioning software where relevant offers improved diagnostics capability (e.g. setpoint/actual value comparison).

A01488 Topology: Comparison EnDat encoder missing in the actual topology

Message value: Component number: %1
Drive object: All objects
Reaction: NONE
Acknowledge: NONE
Cause: The topology comparison has detected an EnDat encoder in the target topology that is not available in the actual topology.
Alarm value (r2124, interpret decimal):
Component number of the additional target components.
Remedy: - re-configure the drive belonging to the encoder in the commissioning software project (encoder configuration) and download the new configuration to the drive unit.
- delete the drive belonging to the encoder in the commissioning software project and download the new configuration to the drive unit.
- check that the actual topology matches the target topology and if required, change over.

Note:
Under "Topology --> Topology view" the commissioning software where relevant offers improved diagnostics capability (e.g. setpoint/actual value comparison).

A01489 Topology: Comparison motor with DRIVE-CLiQ missing in the actual topology

Message value: Component number: %1
Drive object: All objects
Reaction: NONE
Acknowledge: NONE
Cause: The topology comparison has detected a motor with DRIVE-CLiQ in the target topology that is not available in the actual topology.
Alarm value (r2124, interpret decimal):
Component number of the additional target components.
Remedy: - re-configure the drive belonging to this motor in the commissioning software project and download the new configuration to the drive unit.
- re-configure the drive belonging to this motor in the commissioning software project and download the new configuration to the drive unit.
- check that the actual topology matches the target topology and if required, change over.
- check DRIVE-CLiQ cables for interruption and contact problems.
- check that the motor is working properly.
Note:
Under "Topology --> Topology view" the commissioning software where relevant offers improved diagnostics capability (e.g. setpoint/actual value comparison).

F01505 (A) BICO: Interconnection cannot be established

Message value: Parameter: %1
Drive object: All objects
Reaction: NONE
Acknowledge: IMMEDIATELY
Cause: A PROFIdrive telegram has been set (p0922).
An interconnection contained in the telegram was not able to be established.
Fault value (r0949, interpret decimal):
Parameter receiver that should be changed.
Remedy: Establish another interconnection.
Reaction upon A: NONE
Acknowl. upon A: NONE

A01507 (F, N) BICO: Interconnections to inactive objects present

Message value: %1
Drive object: All objects
Reaction: NONE
Acknowledge: NONE
Cause: There are BICO interconnections as signal sink from a drive object that is either inactive/not operational.
The BI/CI parameters involved are listed in r9498.
The associated BO/CO parameters are listed in r9499.
The list of the BICO interconnections to other drive objects is displayed in r9491 and r9492 of the de-activated drive object.
Note:
r9498 and r9499 are only written to, if p9495 is not set to 0.
Alarm value (r2124, interpret decimal):
Number of BICO interconnections found to inactive drive objects.
Remedy: - set all open BICO interconnections centrally to the factory setting with p9495 = 2.
- make the non-operational drive object active/operational again (re-insert or activate components).
Reaction upon F: OFF2 (ENCODER, IASC/DCBRAKE, NONE, OFF1, OFF3, STOP1, STOP2)
Acknowl. upon F: IMMEDIATELY

Reaction upon N: NONE
Acknowl. upon N: NONE

A01508 BICO: Interconnections to inactive objects exceeded

Message value: -
Drive object: All objects
Reaction: NONE
Acknowledge: NONE
Cause: The maximum number of BICO interconnections (signal sinks) when de-activating a drive object was exceeded.
When de-activating a drive object, all BICO interconnections (signal sinks) are listed in the following parameters:
- r9498[0...29]: List of the BI/CI parameters involved.
- r9499[0...29]: List of the associated BO/CO parameters.
Remedy: The alarm automatically disappears as soon as no BICO interconnection (value = 0) is entered in r9498[29] and r9499[29].
Notice:
When re-activating the drive object, all BICO interconnections should be checked and if required, re-established.

F01510 BICO: Signal source is not float type

Message value: Parameter: %1
Drive object: All objects
Reaction: NONE
Acknowledge: IMMEDIATELY
Cause: The requested connector output does not have the correct data type. This interconnection is not established.
Fault value (r0949, interpret decimal):
Parameter number to which an interconnection should be made (connector output).
Remedy: Interconnect this connector input with a connector output having a float data type.

F01511 (A) BICO: Interconnection with different scalings

Message value: Parameter: %1
Drive object: All objects
Reaction: NONE
Acknowledge: IMMEDIATELY
Cause: The requested BICO interconnection was established. However, a conversion is made between the BICO output and BICO input using the reference values.
- the BICO output has different normalized units than the BICO input.
- message only for interconnections within a drive object.
Example:
The BICO output has, as normalized unit, voltage and the BICO input has current.
This means that the factor p2002/p2001 is calculated between the BICO output and the BICO input.
p2002: contains the reference value for current
p2001: contains the reference value for voltage
Fault value (r0949, interpret decimal):
Parameter number of the BICO input (signal sink).
Remedy: Not necessary.
Reaction upon A: NONE
Acknowl. upon A: NONE

F01512 BICO: No scaling available

Message value: %1
Drive object: All objects
Reaction: OFF2
Acknowledge: POWER ON
Cause: An attempt was made to determine a conversion factor for a scaling that does not exist.
Fault value (r0949, interpret decimal):
Unit (e.g. corresponding to SPEED) for which an attempt was made to determine a factor.
Remedy: Apply scaling or check the transfer value.

F01513 (A) BICO: Interconnection cross DO with different scalings

Message value: Parameter: %1

Drive object: All objects

Reaction: NONE

Acknowledge: IMMEDIATELY

Cause: The requested BICO interconnection was established. However, a conversion is made between the BICO output and BICO input using the reference values.

An interconnection is made between different drive objects and the BICO output has different normalized units than the BICO input or the normalized units are the same but the reference values are different.

Example 1:

BICO output with voltage normalized unit, BICO input with current normalized unit, BICO output and BICO input lie in different drive objects. This means that the factor p2002/p2001 is calculated between the BICO output and the BICO input.

p2002: contains the reference value for current

p2001: contains the reference value for voltage

Example 2:

BICO output with voltage normalized unit in drive object 1 (DO1), BICO input with voltage normalized unit in drive object 2 (DO2). The reference values for voltage (p2001) of the two drive objects have different values. This means that the factor p2001(DO1)/p2001(DO2) is calculated between the BICO output and the BICO input.

p2001: contains the reference value for voltage, drive objects 1, 2

Fault value (r0949, interpret decimal):

Parameter number of the BICO input (signal sink).

Remedy: Not necessary.

Reaction upon A: NONE

Acknowl. upon A: NONE

A01514 (F) BICO: Error when writing during a reconnect

Message value: Parameter: %1

Drive object: All objects

Reaction: NONE

Acknowledge: NONE

Cause: During a reconnect operation (e.g. while booting or downloading - but can also occur in normal operation) a parameter was not able to be written to.

Example:

When writing to a double word BICO input in the second index, the memory areas overlap (e.g. p8861). The parameter is then reset to the factory setting.

Alarm value (r2124, interpret decimal):

Parameter number of the BICO input (signal sink).

Remedy: Not necessary.

Reaction upon F: NONE

Acknowl. upon F: IMMEDIATELY

F01515 (A) BICO: Writing to parameter not permitted as the master control is active

Message value: -

Drive object: SERVO_S110-CAN, SERVO_S110-DP, SERVO_S110-PN

Reaction: NONE

Acknowledge: IMMEDIATELY

Cause: When changing the number of CDS or when copying from CDS, the master control is active.

Remedy: If required, return the master control and repeat the operation.

Reaction upon A: NONE

Acknowl. upon A: NONE

A01590 (F) Drive: Motor maintenance interval expired

Message value: Fault cause: %1 bin
Drive object: SERVO_S110-CAN, SERVO_S110-DP, SERVO_S110-PN
Reaction: NONE
Acknowledge: NONE
Cause: The selected service/maintenance interval for this motor was reached.
Alarm value (r2124, interpret decimal):
Motor data set number.
See also: p0650 (Actual motor operating hours), p0651 (Motor operating hours maintenance interval)
Remedy: carry out service/maintenance and reset the service/maintenance interval (p0651).
Reaction upon F: NONE
Acknowl. upon F: IMMEDIATELY

F01600 SI CU: STOP A initiated

Message value: %1
Drive object: SERVO_S110-CAN, SERVO_S110-DP, SERVO_S110-PN
Reaction: OFF2
Acknowledge: IMMEDIATELY (POWER ON)
Cause: The drive-integrated "Safety Integrated" function on the Control Unit (CU) has detected a fault and initiated a STOP A (pulse suppression via the safety shutdown path of the Control Unit).
- forced checking procedure of the safety shutdown path of the Control Unit unsuccessful.
- subsequent response to fault F01611 (defect in a monitoring channel).
Fault value (r0949, interpret decimal):
0: Stop request from the Motor Module.
1005: Pulses suppressed although STO not selected and there is no internal STOP A present.
1010: Pulses enabled although STO is selected or an internal STOP A is present.
1015: Feedback of the safe pulse suppression for Motor Modules connected in parallel are different.
9999: Subsequent response to fault F01611.
Remedy: - select Safe Torque Off and de-select again.
- replace the Motor Module involved.
For fault value = 9999:
- carry out diagnostics for fault F01611.
Note:
CU: Control Unit
MM: Motor Module
SI: Safety Integrated
STO: Safe Torque Off / SH: Safe standstill

F01611 SI CU: Defect in a monitoring channel

Message value: %1
Drive object: SERVO_S110-CAN, SERVO_S110-DP, SERVO_S110-PN
Reaction: NONE (OFF1, OFF2, OFF3)
Acknowledge: IMMEDIATELY (POWER ON)
Cause: The drive-integrated "Safety Integrated" function on the Control Unit (CU) has detected a fault in the crosswise data comparison between the CU and Motor Module (MM) and initiated a STOP F.
As a result of this fault, after the parameterized transition has expired (p9658), fault F01600 (SI CU: STOP A initiated) is output.
Fault value (r0949, interpret decimal):
0: Stop request from the Motor Module.
1 ... 999:
Number of the cross-compared data that resulted in this fault. This number is also displayed in r9795.
1: SI monitoring clock cycle (r9780, r9880).
2: SI enable safety functions (p9601, p9801). Crosswise data comparison is only carried out for the supported bits.
3: SI SGE changeover tolerance time (p9650, p9850).
4: SI transition period STOP F to STOP A (p9658, p9858).

5: SI enable Safe Brake Control (p9602, p9802).
6: SI Motion enable, safety-relevant functions (p9501, internal value).
7: SI pulse suppression delay time for Safe Stop 1 (p9652, p9852).
8: SI PROFIsafe address (p9610, p9810).
9: SI debounce time for STO/SBC/SS1 (MM) (p9651, p9851).
10: SI delay time for pulse suppression for ESR (p9697, p9897).
11: SI Safe Brake Adapter mode, BICO interconnection (p9621, p9821).
12: SI Safe Brake Adapter relay ON time (p9622[0], p9822[0]).
13: SI Safe Brake Adapter relay OFF time (p9622[1], p9822[1]).
1000: Watchdog timer has expired. Within the time of approx. 5 x p9650 too many switching operations have occurred at terminal EP of the Motor Module, or STO (also as subsequent response) was initiated too frequently via PROFIsafe/TM54F.
1001, 1002: Initialization error, change timer / check timer.
1900: CRC error in the SAFETY sector.
1901: CRC error in the ITCM sector.
1902: Overloading in the ITCM sector has occurred in operation.
1950: Module temperature outside the permissible temperature range.
1951: Module temperature not plausible.
2000: Status of the STO selection on the Control Unit and Motor Module are different.
2001: Feedback signal for safe pulse suppression on the Control Unit and Motor Module are different.
2002: Status of the delay timer SS1 on the Control Unit and Motor Module are different.
2004: Status of the STO selection for Motor Modules connected in parallel are different.
2005: Feedback signal of the safe pulse suppression on the Control Unit and Motor Modules connected in parallel are different.
6000 ... 6999:
Error in the PROFIsafe control.
For these fault values, the failsafe control signals (failsafe values) are transferred to the safety functions.
The significance of the individual message values is described in safety message C01711 of the Control Unit.

Remedy:

Re fault value = 1 ... 5 and 7 ... 999:
- check the cross data comparison that resulted in a STOP F.
- carry out a POWER ON (power off/on) for all components.
- upgrade the Motor Module software.
- upgrade the Control Unit software.

For fault value = 6:
- carry out a POWER ON (power off/on) for all components.
- upgrade the Motor Module software.
- upgrade the Control Unit software.

For fault value = 1000:
- check the EP terminal at the Motor Module (contact problems).
- PROFIsafe: Remove contact problems/faults at the PROFIBUS master/PROFINET controller.
- check the wiring of the failsafe inputs at the TM54F (contact problems).

Re fault value = 1001, 1002:
- carry out a POWER ON (power off/on) for all components.
- upgrade the Motor Module software.
- upgrade the Control Unit software.

Re fault value = 1900, 1901, 1902:
- carry out a POWER ON (power off/on) for all components.
- upgrade the Control Unit software.
- replace Control Unit.

Re fault value = 2000, 2001, 2002, 2004, 2005:
- check the tolerance time SGE changeover and if required, increase the value (p9650/p9850, p9652/p9852).
- check the wiring of the safety-relevant inputs (SGE) (contact problems).
- check the causes of the STO selection in r9772. When the SMM functions are active (p9501 = 1), STO can also be selected using these functions.
- replace the Motor Module involved.

Re fault value = 6000 ... 6999:
Refer to the description of the message values in safety message C01711.
Note:
CU: Control Unit
EP: Enable Pulses (pulse enable)
MM: Motor Module
SGE: Safety-relevant input
SI: Safety Integrated
SMM: Safe Motion Monitoring
SS1: Safe Stop 1 (corresponds to Stop Category 1 acc. to EN60204)
STO: Safe Torque Off / SH: Safe standstill
ESR: Extended Stop and Retract

F01612 SI CU: STO inputs for power units connected in parallel different

Message value: Fault cause: %1 bin
Drive object: SERVO_S110-CAN, SERVO_S110-DP, SERVO_S110-PN
Reaction: NONE (OFF1, OFF2, OFF3)
Acknowledge: IMMEDIATELY (POWER ON)
Cause: The drive-integrated "Safety Integrated" function on the Control Unit (CU) has identified different states of the AND'ed STO inputs for power units connected in parallel and has initiated a STOP F.
As a result of this fault, after the parameterized transition has expired (p9658), fault F01600 (SI CU: STOP A initiated) is output.
Fault value (r0949, interpret binary):
Binary image of the digital inputs of the Control Unit that are used as signal source for the function "Safe Torque Off".
Remedy: - check the tolerance time SGE changeover and if required, increase the value (p9650).
- check the wiring of the safety-relevant inputs (SGE) (contact problems).
Note:
CU: Control Unit
SGE: Safety-relevant input
SI: Safety Integrated
STO: Safe Torque Off / SH: Safe standstill

N01620 (F, A) SI CU: Safe Torque Off active

Message value: -
Drive object: SERVO_S110-CAN, SERVO_S110-DP, SERVO_S110-PN
Reaction: NONE
Acknowledge: NONE
Cause: The "Safe Torque Off" (STO) function has been selected on the Control Unit (CU) using the input terminal and is active.
Note:
This message does not result in a safety stop response.
Remedy: Not necessary.
Note:
CU: Control Unit
SI: Safety Integrated
STO: Safe Torque Off / SH: Safe standstill
Reaction upon F: OFF2
Acknowl. upon F: IMMEDIATELY (POWER ON)
Reaction upon A: NONE
Acknowl. upon A: NONE

N01621 (F, A) SI CU: Safe Stop 1 active

Message value: -
Drive object: SERVO_S110-CAN, SERVO_S110-DP, SERVO_S110-PN
Reaction: NONE
Acknowledge: NONE
Cause: The "Safe Stop 1" (SS1) function has been selected on the Control Unit (CU) and is active.
Note:
This message does not result in a safety stop response.
Remedy: Not necessary.
Note:
CU: Control Unit
SI: Safety Integrated
SS1: Safe Stop 1 (corresponds to Stop Category 1 acc. to EN60204)
Reaction upon F: OFF3
Acknowl. upon F: IMMEDIATELY (POWER ON)
Reaction upon A: NONE
Acknowl. upon A: NONE

F01625 SI CU: Sign-of-life error in safety data

Message value: %1
Drive object: SERVO_S110-CAN, SERVO_S110-DP, SERVO_S110-PN
Reaction: OFF2
Acknowledge: IMMEDIATELY (POWER ON)
Cause: The drive-integrated "Safety Integrated" function on the Control Unit (CU) has detected an error in the sign-of-life of the safety data between the CU and Motor Module (MM) and initiated a STOP A.
- there is either a DRIVE-CLiQ communication error or communication has failed.
- a time slice overflow of the safety software has occurred.
Fault value (r0949, interpret decimal):
Only for internal Siemens troubleshooting.
Remedy: - select Safe Torque Off and de-select again.
- carry out a POWER ON (power off/on) for all components.
- check whether there is a DRIVE-CLiQ communication error between the Control Unit and the Motor Module involved and, if required, carry out a diagnostics routine for the faults identified.
- de-select all drive functions that are not absolutely necessary.
- reduce the number of drives.
- check the electrical cabinet design and cable routing for EMC compliance
Note:
CU: Control Unit
MM: Motor Module
SI: Safety Integrated

F01630 SI CU: Brake control error

Message value: %1
Drive object: SERVO_S110-CAN, SERVO_S110-DP, SERVO_S110-PN
Reaction: OFF2
Acknowledge: IMMEDIATELY (POWER ON)
Cause: The drive-integrated "Safety Integrated" function on the Control Unit (CU) has detected a brake control fault and initiated a STOP A.
Fault value (r0949, interpret decimal):
Re fault value = 10, 11:
Fault in "open holding brake" operation.
- Parameter p1278 incorrectly set.
- No brake connected or wire breakage (check whether brake releases for p1278 = 1 and p9602/p9802 = 0 (SBC de-activated)).
- Ground fault in brake cable.

For fault value = 20:
Fault in "brake open" state.
- Short-circuit in brake winding.
Re fault value = 30, 31:
Fault in "close holding brake" operation.
- No brake connected or wire breakage (check whether brake releases for p1278 = 1 and p9602/p9802 = 0 (SBC de-activated)).
- Short-circuit in brake winding.
For fault value = 40:
Fault in "brake closed" state.
For fault value = 50:
Fault in the brake control circuit of the Control Unit or communication fault between the Control Unit and Motor Module (brake control).
For fault value = 80:
SafeBrakeAdapter: Fault in the brake control circuit of the Control Unit or communication fault between Control Unit and Motor Module (brake control diagnostics).
Note:
The following causes may apply to fault values:
- motor cable is not shielded correctly.
- defect in control circuit of the Motor Module.

Remedy:
- check parameter p1278 (for SBC, only p1278 = 0 is permissible).
- select Safe Torque Off and de-select again.
- check the motor holding brake connection.
- check the function of the motor holding brake.
- check whether there is a DRIVE-CLiQ communication error between the Control Unit and the Motor Module involved and, if required, carry out a diagnostics routine for the faults identified.
- check that the electrical cabinet design and cable routing are in compliance with EMC regulations (e.g. shield of the motor cable and brake conductors are connected with the shield connecting plate and the motor connectors are tightly screwed to the housing).
- replace the Motor Module involved.

Operation with Safe Brake Module or Safe Brake Adapter:
- check the Safe Brake Module or Safe Brake Adapter connection.
- replace the Safe Brake Module or Safe Brake Adapter.

Note:
CU: Control Unit
SBC: Safe Brake Control
SI: Safety Integrated

F01649 SI CU: Internal software error

Message value: %1
Drive object: SERVO_S110-CAN, SERVO_S110-DP, SERVO_S110-PN
Reaction: OFF2
Acknowledge: IMMEDIATELY (POWER ON)
Cause: An internal error in the Safety Integrated software on the Control Unit has occurred.
Note:
This fault results in a STOP A that cannot be acknowledged.
Fault value (r0949, interpret hexadecimal):
Only for internal Siemens troubleshooting.

Remedy:
- carry out a POWER ON (power off/on) for all components.
- re-commission the "Safety Integrated" function and carry out a POWER ON.
- Upgrade the firmware of the Control Unit to a later version.
- contact the Hotline.
- replace the Control Unit.

Note:
CU: Control Unit
MM: Motor Module
SI: Safety Integrated

F01650 SI CU: Acceptance test required

Message value: %1

Drive object: All objects

Reaction: OFF2

Acknowledge: IMMEDIATELY (POWER ON)

Cause: The drive-integrated "Safety Integrated" function on the Control Unit requires an acceptance test.
Note:
This fault results in a STOP A that can be acknowledged.
Fault value (r0949, interpret decimal):
130: Safety parameters for the Motor Module not available.
Note:
This fault value is always output when Safety Integrated is commissioned for the first time.
1000: Reference and actual checksum on the Control Unit are not identical (booting).
- at least one checksum-checked piece of data is defective.
2000: Reference and actual checksum on the Control Unit are not identical (commissioning mode).
- reference checksum incorrectly entered into the Control Unit (p9799 not equal to r9798).
- when de-activating the safety functions, p9501 or p9503 were not deleted.
2001: Reference and actual checksum on the Motor Module are not identical (commissioning mode).
- reference checksum incorrectly entered into the Motor Module (p9899 not equal to r9898).
- when de-activating the safety functions, p9501 or p9503 are not deleted.
2002: Enable of safety-related functions between the Control Unit and Motor Module differ (p9601 not equal to p9801).
2003: Acceptance test is required as a safety parameter has been changed.
2004: An acceptance test is required because a project with enabled safety-functions has been downloaded.
2005: The Safety logbook has identified that a functional safety checksum has changed. An acceptance test is required.
2010: Safe Brake Control is enabled differently between the Control Unit and Motor Module (p9602 not equal to p9802).
2020: Error when saving the safety parameters for the Motor Module.
3003: Acceptance test is required as a hardware-related safety parameter has been changed.
3005: The Safety logbook has identified that a hardware-related safety checksum has changed. An acceptance test is required.
9999: Subsequent response of another safety-related fault that occurred when booting that requires an acceptance test.

Remedy: For fault value = 130:
- carry out safety commissioning routine.
For fault value = 1000:
- again carry out safety commissioning routine.
- replace the memory card or Control Unit.
For fault value = 2000:
- check the safety parameters in the Control Unit and adapt the reference checksum (p9799).
For fault value = 2001:
- check the safety parameters in the Motor Module and adapt the reference checksum (p9899).
For fault value = 2002:
- enable the safety-related functions in the Control Unit and check in the Motor Module (p9601 = p9801).
Re fault value = 2003, 2004, 2005:
- Carry out an acceptance test and generate an acceptance report.
The procedure when carrying out an acceptance test as well as an example of the acceptance report are provided in the following literature:
SINAMICS S120 Function Manual Safety Integrated
The fault with fault value 2005 can only be acknowledged when the "STO" function is de-selected.

For fault value = 2010:
- check enable of the safety-related brake control in the Control Unit and Motor Module (p9602 = p9802).

For fault value = 2020:
- again carry out safety commissioning routine.
- replace the memory card or Control Unit.

For fault value = 3003:
- carry out the function checks for the modified hardware and generate an acceptance report.

The procedure when carrying out an acceptance test as well as an example of the acceptance report are provided in the following literature:
SINAMICS S120 Function Manual Safety Integrated

For fault value = 3005:
- carry out the function checks for the modified hardware and generate an acceptance report.

The fault with fault value 3005 can only be acknowledged when the "STO" function is de-selected.

For fault value = 9999:
- carry out diagnostics for the other safety-related fault that is present.

Note:
CU: Control Unit
MM: Motor Module
SI: Safety Integrated
STO: Safe Torque Off

See also: p9799 (SI reference checksum SI parameters (Control Unit)), p9899 (SI setpoint checksum SI parameters (processor 2))

F01651 SI CU: Synchronization safety time slices unsuccessful

Message value: %1

Drive object: SERVO_S110-CAN, SERVO_S110-DP, SERVO_S110-PN

Reaction: OFF2

Acknowledge: IMMEDIATELY (POWER ON)

Cause: The "Safety Integrated" function requires a synchronization of the safety time slices between the Control Unit (CU) and Motor Module (MM) and between the Control Unit and the higher-level control. This synchronization routine was unsuccessful.

Note:
This fault results in a STOP A that cannot be acknowledged.

Fault value (r0949, interpret decimal):

121:
- with SINUMERIK Safety Integrated enabled, a drive-side warm restart was performed on the CU/NX.
- with SINUMERIK Safety Integrated enabled, the function "restore factory setting" was selected on a drive object of the CU and a drive-side warm restart was initiated.

150:
- fault in the synchronization to the PROFIBUS master.

All other values:
- only for internal Siemens troubleshooting.

See also: p9510 (SI Motion clock-cycle synchronous PROFIBUS master)

Remedy: For fault value = 121:
- carry out a common POWER ON/warm restart for the higher-level control and SINAMICS.

For fault value = 150:
- check the setting of p9510 (SI Motion clock-cycle synchronous PROFIBUS master) and if required, correct.

General:
- carry out a POWER ON (power off/on) for all components.
- upgrade the Motor Module software.
- upgrade the Control Unit software.
- upgrade the software of the higher-level control.

Note:
CU: Control Unit
MM: Motor Module
SI: Safety Integrated

F01652 SI CU: Illegal monitoring clock cycle

Message value: %1

Drive object: SERVO_S110-CAN, SERVO_S110-DP, SERVO_S110-PN

Reaction: OFF2

Acknowledge: IMMEDIATELY (POWER ON)

Cause: One of the Safety Integrated monitoring clock cycles is not permissible:

- the monitoring clock cycle integrated in the drive cannot be maintained due to the communication conditions required in the system.
- the monitoring clock cycle for safe motion monitoring functions with the higher-level control is not permissible (p9500).
- The sampling time for the current controller (p0112, p0115) cannot be supported.

Note:

This fault results in a STOP A that cannot be acknowledged.

Fault value (r0949, interpret decimal):

- for enabled SI monitoring integrated in the drive (p9601/p9801 > 0):

Minimum setting for the monitoring clock cycle (in µs).

- for enabled motion monitoring function (p9501 > 0):

100: No matching monitoring clock cycle was able to be found.

101: The monitoring clock cycle is not an integer multiple of the actual value sensing clock cycle.

102: An error has occurred when transferring the DP clock cycle to the Motor Module (MM).

103: An error has occurred when transferring the DP clock cycle to the Sensor Module.

104,105:

- four times the current controller sampling time is greater than 1 ms when operating with a non-isochronous PROFIBUS.
- four times the current controller sampling time is greater than the DP clock cycle when operating with an isochronous PROFIBUS.
- The DP clock cycle is not an integer multiple of the sampling time of the current controller.

106: The monitoring clock cycle does not match the monitoring clock cycle of the TM54F.

107: Four times the current controller sampling time is greater than the actual value sensing clock cycle (p9511) or the actual value sensing clock cycle is not an integer multiple of the current controller sampling time.

108: The parameterized actual value sensing clock cycle cannot be set on this component.

109: If the motion monitoring functions have been parameterized as encoderless (p9506), the actual value sensing clock cycle (p9511) and the current controller clock cycle must be identical.

The following applies to SINAMICS S110:

- If the motion monitoring functions have been parameterized as encoderless (p9506), the actual value sensing clock cycle p9511 must be = 250 µs.

110: The actual value sensing clock cycle (p9511) for safety with encoder (p9506 = 0) is less than 2 ms for this Control Unit (e.g. CU305).

Remedy: For enabled SI monitoring integrated in the drive (p9601/p9801 > 0):

- upgrade the Control Unit software.

For enabled motion monitoring function (p9501 > 0):

- correct the monitoring clock cycle (p9500) and carry out POWER ON.

For fault value = 101:

- actual value sensing clock cycle corresponds to position control clock cycle/DP clock cycle (factory setting).
- for motion monitoring functions integrated in the drive (p9601/p9801bit 2 = 1) the actual value sensing clock cycle can be directly parameterized in p9511/p9311.

Re fault value = 104, 105:

- set a separate actual value sensing clock cycle in p9511.
- restrict operation to a maximum of two vector drives. For the standard setting in p0112, p0115, the current controller sampling time is automatically reduced to 250 µs. If the standard values were changed, then the current controller sampling time (p0112, p0115) should be appropriately set.
- increase the DP clock cycle for operation with a clock-cycle synchronous PROFIBUS so that there is a multiple clock cycle ratio of at least 4:1 between the DP clock cycle and the current controller sampling time. A clock cycle ratio of at least 8:1 is recommended.
- With firmware version 2.5, please ensure that parameter p9510 is set to 1 in the drive (clock cycle synchronous operation).

For fault value = 106:

- set the parameters for the monitoring clock cycles the same (p10000 and p9500 / p9300).

For fault value = 107:

- set an actual value sensing clock cycle in p9511 that matches the current controller clock cycle. A clock cycle ratio of at least 8:1 is recommended.

For fault value = 108:

- set a suitable actual value sensing clock cycle in p9511.
- if the DP clock cycle is used as the actual value sensing clock cycle for operation with isochronous PROFIBUS (p9511 = 0), then a suitable DP clock cycle must be configured.

A suitable multiple of the DP clock cycle (e.g. 1, 2, 3, 4, 5, 6, 8, 10) must be parameterized on the D410. Otherwise, the clock cycle must be set to less than 8 ms.

For fault value = 109:

- set the actual value sensing clock cycle in p9511 to the same value as the current controller clock cycle (p115).

The following applies to SINAMICS S110:

- set the actual value sensing clock cycle to p9511 = 250 µs.

For fault value = 110:

- set the actual value sensing clock cycle in p9511 to 2 ms or higher.

Note:

CU: Control Unit

MM: Motor Module

SI: Safety Integrated

F01653 SI CU: PROFIBUS configuration error

Message value: %1

Drive object: SERVO_S110-CAN, SERVO_S110-DP, SERVO_S110-PN

Reaction: NONE (OFF1, OFF2, OFF3)

Acknowledge: IMMEDIATELY (POWER ON)

Cause: There is a PROFIBUS configuration error for using Safety Integrated monitoring functions with a higher-level control (SINUMERIK or F-PLC).

Note:

For safety functions that have been enabled, this fault results in a STOP A that cannot be acknowledged.

Fault value (r0949, interpret decimal):

200: A safety slot for receive data from the control has not been configured.

210, 220: The configured safety slot for the receive data from the control has an unknown format.

230: The configured safety slot for the receive data from the F-PLC has the incorrect length.

231: The configured safety slot for the receive data from the F-PLC has the incorrect length.

240: The configured safety slot for the receive data from the SINUMERIK has the incorrect length.

250: A PROFIsafe slot is configured in the higher-level F control, however PROFIsafe is not enabled in the drive.

300: A safety slot for the send data to the control has not been configured.

310, 320: The configured safety slot for the send data to the control has an unknown format.

330: The configured safety slot for the send data to the F-PLC has the incorrect length.

331: The configured safety slot for the send data to the F-PLC has the incorrect length.

340: The configured safety slot for the send data to the SINUMERIK has the incorrect length.

Remedy: The following generally applies:

- check and, if necessary, correct the PROFIBUS configuration of the safety slot on the master side.
- upgrade the Control Unit software.

For fault value = 250:

- remove the PROFIsafe configuring in the higher-level F control or enable PROFIsafe in the drive.

Re fault value = 231, 331:

- configure the PROFIsafe telegram matching the parameterization in the F-PLC.

The following applies for p9501.30 = 1 (F-DI via PROFIsafe is enabled): PROFIsafe telegram 900 must be configured.

The following applies for p9501.30 = 0 (F-DI via PROFIsafe is not enabled): PROFIsafe telegram 30 must be configured.

F01655 SI CU: Align monitoring functions

Message value: %1

Drive object: SERVO_S110-CAN, SERVO_S110-DP, SERVO_S110-PN

Reaction: OFF2

Acknowledge: IMMEDIATELY (POWER ON)

Cause: An error has occurred when aligning the Safety Integrated monitoring functions on the Control Unit (CU) and Motor Module (MM). Control Unit and Motor Module were not able to determine a common set of supported SI monitoring functions.
- there is either a DRIVE-CLiQ communication error or communication has failed.
- Safety Integrated software releases on the Control Unit and Motor Module are not compatible with one another.

Note:
This fault results in a STOP A that cannot be acknowledged.
Fault value (r0949, interpret hexadecimal):
Only for internal Siemens troubleshooting.

Remedy:
- carry out a POWER ON (power off/on) for all components.
- upgrade the Motor Module software.
- upgrade the Control Unit software.
- check the electrical cabinet design and cable routing for EMC compliance

Note:
CU: Control Unit
MM: Motor Module
SI: Safety Integrated

F01656 SI CU: Motor Module parameter error

Message value: %1

Drive object: SERVO_S110-CAN, SERVO_S110-DP, SERVO_S110-PN

Reaction: OFF2

Acknowledge: IMMEDIATELY (POWER ON)

Cause: When accessing the Safety Integrated parameters for the Motor Module (MM) in the non-volatile memory, an error has occurred.

Note:
This fault results in a STOP A that can be acknowledged.
Fault value (r0949, interpret decimal):
129:
- safety parameters for the Motor Module corrupted.
- drive with enabled safety functions was possibly copied offline using the commissioning software and the project downloaded.

131: Internal Motor Module software error.
132: Communication errors when uploading or downloading the safety parameters for the Motor Module.
255: Internal software error on the Control Unit.

Remedy:
- re-commission the safety functions.
- upgrade the Control Unit software.
- upgrade the Motor Module software.
- replace the memory card or Control Unit.

For fault value = 129:
- activate the safety commissioning mode (p0010 = 95).
- adapt the PROFIsafe address (p9610).
- start the copy function for SI parameters (p9700 = D0 hex).
- acknowledge data change (p9701 = DC hex).
- exit the safety commissioning mode (p0010 = 0).
- save all parameters (p0977 = 1 or "copy RAM to ROM").
- carry out a POWER ON (power off/on) for all components.

For fault value = 132:
- check the electrical cabinet design and cable routing for EMC compliance

Note:
CU: Control Unit
MM: Motor Module
SI: Safety Integrated

F01659 SI CU: Write request for parameter rejected

Message value: %1

Drive object: SERVO_S110-CAN, SERVO_S110-DP, SERVO_S110-PN

Reaction: OFF2

Acknowledge: IMMEDIATELY (POWER ON)

Cause: The write request for one or several Safety Integrated parameters on the Control Unit (CU) was rejected.

Note:

This fault does not result in a safety stop response.

Fault value (r0949, interpret decimal):

1: The Safety Integrated password is not set.

2: A reset of the drive parameters was selected. However, the Safety Integrated parameters were not reset, as Safety Integrated is presently enabled.

3: The interconnected STO input is in the simulation mode.

10: An attempt was made to enable the STO function although this cannot be supported.

11: An attempt was made to enable the SBC function although this cannot be supported.

12: An attempt was made to enable the SBC function although this cannot be supported for a parallel circuit configuration.

13: An attempt was made to enable the SS1 function although this cannot be supported.

14: An attempt was made to enable the PROFIsafe communication - although this cannot be supported or the version of the PROFIsafe driver used on the CU and MM is different.

15: An attempt was made to enable the motion monitoring functions integrated in the drive although these cannot be supported.

16: An attempt was made to enable the STO function although this cannot be supported when the internal voltage protection (p1231) is enabled.

17: An attempt was made to enable the PROFIsafe function although this cannot be supported for a parallel circuit configuration.

18: An attempt was made to enable the PROFIsafe function for Basic Functions although this cannot be supported.

19: An attempt was made to enable the SBA (Safe Brake Adapter), although this cannot be supported.

20: An attempt was made to enable the motion monitoring functions integrated in the drive and the STO function, both controlled via F-DI.

21: An attempt was made to enable the motion monitoring functions integrated in the drive for a parallel connection, although these cannot be supported.

22: An attempt was made to enable the Safety Integrated functions although these cannot be supported by the connected Power Module.

23: For ESR, an attempt was made to enable the delay for pulse suppression, although this cannot be supported.

See also: p0970 (Reset drive parameters), p3900 (Completion of quick commissioning), r9771 (SI common functions (processor 1)), r9871 (SI common functions (processor 2))

Remedy: For fault value = 1:

- set the Safety Integrated password (p9761).

For fault value = 2:

- Inhibit Safety Integrated (p9501, p9601) or reset safety parameters (p0970 = 5), then reset the drive parameters again.

For fault value = 3:

- end the simulation mode for the digital input (p0795).

Re fault value = 10, 11, 12, 13, 14, 15, 17, 18, 19, 21, 22 , 23:

- check whether there are faults in the safety function alignment between the Control Unit and the Motor Module involved (F01655, F30655) and if required, carry out diagnostics for the faults involved.
- use a Motor Module that supports the required function.
- upgrade the Motor Module software.
- upgrade the Control Unit software.

For fault value = 16:

- inhibit the internal voltage protection (p1231).

For fault value = 20:
- correct setting in p9601.
For fault value = 22:
- use a Power Module that supports the Safety Integrated functions.
Note:
CU: Control Unit
ESR: Extended Stop and Retract
MM: Motor Module
SBA: Safe Brake Adapter
SBC: Safe Brake Control
SI: Safety Integrated
SS1: Safe Stop 1 (corresponds to Stop Category 1 acc. to EN60204)
STO: Safe Torque Off / SH: Safe standstill
See also: p9501 (SI Motion enable safety functions (processor 1)), p9601 (SI enable functions integrated in the drive (processor 1)), p9761 (SI password input), p9801 (SI enable functions integrated in the drive (processor 2))

F01660 SI CU: Safety-related functions not supported

Message value: -
Drive object: SERVO_S110-CAN, SERVO_S110-DP, SERVO_S110-PN
Reaction: OFF2
Acknowledge: IMMEDIATELY (POWER ON)
Cause: The Motor Module (MM) does not support the safety-related functions (e.g. the Motor Module version is not the correct one). Safety Integrated cannot be commissioned.
Note:
This fault does not result in a safety stop response.
Remedy: - use a Motor Module that supports the safety-related functions.
- upgrade the Motor Module software.
Note:
CU: Control Unit
MM: Motor Module
SI: Safety Integrated

F01662 Error internal communications

Message value: %1
Drive object: All objects
Reaction: OFF2
Acknowledge: POWER ON
Cause: A module-internal communication error has occurred.
Fault value (r0949, interpret hexadecimal):
Only for internal Siemens troubleshooting.
Remedy: - carry out a POWER ON (power off/on).
- upgrade firmware to later version.
- contact the Hotline.

F01663 SI CU: Copying the SI parameters rejected

Message value: -
Drive object: SERVO_S110-CAN, SERVO_S110-DP, SERVO_S110-PN
Reaction: OFF2
Acknowledge: IMMEDIATELY (POWER ON)
Cause: One of the following values is saved in p9700 or was entered offline: 87 or 208.
This is the reason that when booting, an attempt is made to copy SI parameters from the Control Unit to the Motor Module. However, no safety-relevant function has been selected on the Control Unit (p9501 = 0, p9601 = 0). This is the reason that copying is not possible.
Note:
This fault does not result in a safety stop response.
See also: p9700 (SI Motion copy function)

Remedy: - Set p9700 to 0.
- Check p9501 and p9601 and if required, correct.
- Restart the copying function by entering the corresponding value into p9700.

F01664 SI CU: No automatic firmware update

Message value: %1
Drive object: SERVO_S110-CAN, SERVO_S110-DP, SERVO_S110-PN
Reaction: OFF2
Acknowledge: IMMEDIATELY (POWER ON)
Cause: During booting, the system detected that the "Firmware update automatic" function (p7826 = 1) was not activated.
This function must be activated for automatic firmware updates/downgrades to prevent impermissible version combinations when safety functions are enabled.
Note:
This fault does not result in a safety stop response.
Remedy: When safety functions are enabled (p9501 <> 0 and/or p9601 <> 0):
1. Activate the "Firmware update automatic" function (p7826 = 1).
2. Save the parameters (p0977 = 1) and carry out a POWER ON.
When de-activating the safety functions (p9501 = 0, p9601 = 0), the fault can be acknowledged after exiting the safety commissioning mode.

F01665 SI CU: System is defective

Message value: %1
Drive object: SERVO_S110-CAN, SERVO_S110-DP, SERVO_S110-PN
Reaction: OFF2
Acknowledge: IMMEDIATELY
Cause: A system defect was detected before the last boot or in the actual one. The system might have been rebooted (reset).
Fault value (r0949, interpret hexadecimal):
200000 hex, 400000 hex, 8000yy hex (yy any):
- Fault in the actual booting/operation.
800004 hex:
- Parameters p9500/p9300 are, under certain circumstances, not the same. In addition, Safety message C01711/C30711 is displayed.
Additional values:
- defect before the last time that the system booted.
Remedy: - carry out a POWER ON (power off/on).
- upgrade firmware to later version.
- contact the Hotline.
Re fault value = 200000 hex, 400000 hex, 8000yy hex (yy any):
- ensure that the Control Unit is connected to the Power Module.
Re fault value = 800004 hex:
- Check that parameters p9500/p9300 are the same.

A01666 (F) SI Motion CU: Steady-state (static) 1 signal at the F-DI for safe acknowledgment

Message value: -
Drive object: SERVO_S110-CAN, SERVO_S110-DP, SERVO_S110-PN
Reaction: NONE
Acknowledge: NONE
Cause: A logical 1 signal is present at the F-DI configured in p10006 for more than 10 seconds.
If, at the F-DI no acknowledgment was performed for safe acknowledgment, then a steady-state logical and 0 signal must be present. This avoids unintentional safety-relevant acknowledgement (or the "Internal Event Acknowledge" signal) if a wire breaks or one of the two digital inputs bounces.
Remedy: Set the fail-safe digital input (F-DI) to a logical 0 signal (p10006).
Note:
F-DI: Failsafe Digital Input

Reaction upon F: NONE
Acknowl. upon F: IMMEDIATELY

A01669 (F, N) SI Motion: Unfavorable combination of motor and power unit

Message value: %1
Drive object: SERVO_S110-CAN, SERVO_S110-DP, SERVO_S110-PN
Reaction: NONE
Acknowledge: NONE
Cause: The combination of motor and power unit used is not suitable for using safe motion monitoring functions without an encoder.
Alarm value (r2124, interpret decimal):
Number of the motor data set, which caused the fault.
Remedy: Use a suitable power unit with a lower power rating or a motor with a higher power rating.
Reaction upon F: NONE (OFF1, OFF2, OFF3)
Acknowl. upon F: IMMEDIATELY (POWER ON)
Reaction upon N: NONE
Acknowl. upon N: NONE

F01670 SI Motion: Invalid parameterization Sensor Module

Message value: %1
Drive object: SERVO_S110-CAN, SERVO_S110-DP, SERVO_S110-PN
Reaction: OFF2
Acknowledge: IMMEDIATELY (POWER ON)
Cause: The parameterization of a Sensor Module used for Safety Integrated is not permissible.
Note:
This fault results in a STOP A that cannot be acknowledged.
Fault value (r0949, interpret decimal):
1: No encoder was parameterized for Safety Integrated.
2: An encoder was parameterized for Safety Integrated that does not have an A/B track (sine/cosine).
3: The encoder data set selected for Safety Integrated is still not valid.
4: A communication error with the encoder has occurred.
5: Number of relevant bits in the encoder coarse position invalid.
6: DRIVE-CLiQ encoder configuration invalid.
10: For an encoder used for Safety Integrated, not all of the Drive Data Sets (DDS) are assigned to the same Encoder Data Set (EDS) (p0187, p0188).
Remedy: Re fault value = 1, 2:
- use and parameterize an encoder that Safety Integrated supports (encoder with track A/B sine-wave, p0404.4 = 1).
For fault value = 3:
- check whether the drive or drive commissioning function is active and if required, exit this (p0009 = p00010 = 0), save the parameters (p0971 = 1) and carry out a POWER ON
For fault value = 4:
- check whether there is a DRIVE-CLiQ communication error between the Control Unit and the Sensor Module involved and if required, carry out a diagnostics routine for the faults identified.
For fault value = 10:
- align the EDS assignment of all of the encoders used for Safety Integrated (p0187, p0188).
Note:
SI: Safety Integrated

F01671 SI Motion: Parameterization encoder error

Message value: %1
Drive object: SERVO_S110-CAN, SERVO_S110-DP, SERVO_S110-PN
Reaction: OFF2
Acknowledge: IMMEDIATELY (POWER ON)
Cause: The parameterization of the encoder used by Safety Integrated is different to the parameterization of the standard encoder.
Note:
This fault does not result in a safety stop response.
Fault value (r0949, interpret decimal):
Parameter number of the non-corresponding safety parameter.
Remedy: Align the encoder parameterization between the safety encoder and the standard encoder.
Note:
SI: Safety Integrated

F01672 SI CU: Motor Module software/hardware incompatible

Message value: %1
Drive object: SERVO_S110-CAN, SERVO_S110-DP, SERVO_S110-PN
Reaction: OFF2
Acknowledge: IMMEDIATELY (POWER ON)
Cause: The existing Motor Module software does not support safe motion monitoring or is not compatible to the software on the Control Unit or there is a communications error between the Control Unit and Motor Module.
Note:
This fault results in a STOP A that cannot be acknowledged.
Fault value (r0949, interpret decimal):
1: The existing Motor Module software does not support the safe motion monitoring function.
2, 3, 6, 8: There is a communications error between the Control Unit and Motor Module.
4, 5, 7: The existing Motor Module software is not compatible to the software on the Control Unit.
9,10,11,12: The actual Motor Module software does not support safe encoderless motion monitoring.
13: At least one Motor Module in parallel operation does not support the safe motion monitoring function.
Remedy: - check whether there are faults in the safety function alignment between the Control Unit and the Motor Module involved (F01655, F30655) and if required, carry out diagnostics for the faults involved.
For fault value = 1:
- use a Motor Module that supports safe motion monitoring.
Re fault value = 2, 3, 6, 8:
- check whether there is a DRIVE-CLiQ communication error between the Control Unit and the Motor Module involved and, if required, carry out a diagnostics routine for the faults identified.
Re fault value = 4, 5, 7, 9, 13:
- upgrade the Motor Module software.
Note:
SI: Safety Integrated

F01673 SI Motion: Sensor Module software/hardware incompatible

Message value: %1
Drive object: SERVO_S110-CAN, SERVO_S110-DP, SERVO_S110-PN
Reaction: OFF2
Acknowledge: IMMEDIATELY (POWER ON)
Cause: The existing Sensor Module software and/or hardware does not support the safe motion monitoring function with the higher-level control.
Note:
This fault does not result in a safety stop response.
Fault value (r0949, interpret decimal):
Only for internal Siemens troubleshooting.

Remedy: - upgrade the Sensor Module software.
- use a Sensor Module that supports the safe motion monitoring function.
Note:
SI: Safety Integrated

F01680 SI Motion CU: Checksum error safety monitoring functions

Message value: %1
Drive object: SERVO_S110-CAN, SERVO_S110-DP, SERVO_S110-PN
Reaction: OFF2
Acknowledge: IMMEDIATELY (POWER ON)
Cause: The actual checksum calculated by the drive and entered in r9728 via the safety-relevant parameters does not match the reference checksum saved in p9729 at the last machine acceptance.
Safety-relevant parameters have been changed or a fault is present.
Note:
This fault results in a STOP A that can be acknowledged.
Fault value (r0949, interpret decimal):
0: Checksum error for SI parameters for motion monitoring.
1: Checksum error for SI parameters for actual values.
2: Checksum error for SI parameters for component assignment.
Remedy: - check the safety-relevant parameters and if required, correct.
- perform a POWER ON if safety parameters requiring a POWER ON have been modified.
- carry out an acceptance test.

F01681 SI Motion CU: Incorrect parameter value

Message value: Parameter: %1
Drive object: SERVO_S110-CAN, SERVO_S110-DP, SERVO_S110-PN
Reaction: OFF2
Acknowledge: IMMEDIATELY (POWER ON)
Cause: The parameter cannot be parameterized with this value.
Note:
This fault does not result in a safety stop response.
Fault value (r0949, interpret decimal):
Parameter number with the incorrect value.
9522: The gear stage was set too high.
9500: p9500 not equal to p9300
9511: p9511 not equal to p9311
Remedy: Correct the parameter value.
For fault value = 9500:
Align parameters 9300 and 9500, backup parameters (p0971 = 1) and carry out a POWER ON.
With hysteresis/filtering enabled (p9501.16 = 1), the following applies:
- Set parameters p9546/p9346 and p9547/p9347 acc. to the following rule: p9546 >= 2 x p9547; p9346 >= 2 x p9347.
- The following rule must also be adhered to when actual value synchronization (p9501.3 = 1) is enabled: p9549 <= p9547; p9349 <= p9347.
For fault value = 9507:
- Set synchronous or induction motor according to p0300.
Re fault value = p9511:
Align parameters p9311 and p9511, backup parameters (p0971 = 1) and carry out a POWER ON.
For fault value = 9517:
- Also check p9516.0.
For fault value = 9522:
- Correct parameters.

F01682 SI Motion CU: Monitoring function not supported

Message value: %1

Drive object: SERVO_S110-CAN, SERVO_S110-DP, SERVO_S110-PN

Reaction: OFF2

Acknowledge: IMMEDIATELY (POWER ON)

Cause: The monitoring function enabled in p9501, p9601 or p9801 is not supported in this firmware version.
Note:
This fault results in a STOP A that cannot be acknowledged.
Fault value (r0949, interpret decimal):
1: Monitoring function SLP not supported (p9501.1).
2: Monitoring function SCA not supported (p9501.7 and p9501.8 ... 15 and p9503).
3: Monitoring function SLS override not supported (p9501.5).
4: Monitoring function external ESR activation not supported (p9501.4).
5: Monitoring function F-DI in PROFIsafe not supported (p9501.30).
6: Enable actual value synchronization not supported (p9501.3).
9: Monitoring function not supported, enable bit reserved (p9501.2, p9501.17 ... 29, p9501.31, if required p9501.6).
10: Monitoring functions only supported for a SERVO drive object.
11: Only encoderless monitoring functions integrated in the drive are supported.
12: Monitoring functions for ncSI are not supported on a CU305.
20: Motion monitoring functions integrated in the drive are only supported in conjunction with PROFIsafe (p9501, p9601.1 ... 2 and p9801.1 ... 2).
21: PROFIsafe only supported in conjunction with motion monitoring functions integrated in the drive (p9501, p9601.1 ... 2 and p9801.1 ... 2).
22: Encoderless monitoring functions in chassis format not supported.
23: CU240 does not support monitoring functions requiring an encoder.
24: Monitoring function SDI not supported (p9501.17).
25: Drive-integrated motion monitoring functions not supported (p9501, p9601.2).
26: hysteresis and filtering for SSM monitoring function without an encoder not supported (p9501.16).

Remedy: De-select the monitoring function involved (p9501, p9503, p9506, p9601, p9801).
Note:
ESR: Extended Stop and Retract
SCA: Safe Cam / SN: Safe software cam
SDI: Safe Direction (safe motion direction)
SI: Safety Integrated
SLP: Safely-Limited Position / SE: Safe software limit switches
SLS: Safely-Limited Speed / SG: Safely reduced speed
SDI: Safe Direction (safe motion direction)
See also: p9501 (SI Motion enable safety functions (processor 1)), p9503 (SI Motion SCA (SN) enable (Control Unit)), r9771 (SI common functions (processor 1))

F01683 SI Motion CU: SOS/SLS enable missing

Message value: -

Drive object: SERVO_S110-CAN, SERVO_S110-DP, SERVO_S110-PN

Reaction: OFF2

Acknowledge: IMMEDIATELY (POWER ON)

Cause: The safety-relevant basic function "SOS/SLS" is not enabled in p9501 although other safety-relevant monitoring functions are enabled.
Note:
This fault does not result in a safety stop response.

Remedy: Enable the function "SOS/SLS" (p9501.0) and carry out a POWER ON.
Note:
SI: Safety Integrated
SLS: Safely-Limited Speed / SG: Safely reduced speed
SOS: Safe Operating Stop / SBH: Safe operating stop
See also: p9501 (SI Motion enable safety functions (processor 1))

F01684 SI Motion: Safely limited position limit values interchanged

Message value: %1
Drive object: SERVO_S110-CAN, SERVO_S110-DP, SERVO_S110-PN
Reaction: OFF2
Acknowledge: IMMEDIATELY (POWER ON)
Cause: For the function "Safely Limited Position" (SLP), a lower value is in p9534 than in p9535.
Note:
This fault does not result in a safety stop response.
Fault value (r0949, interpret decimal):
1: Limit values SLP1 interchanged.
2: Limit values SLP2 interchanged.
Remedy: Correct the limit values in p9534 and p9535 and carry out a POWER ON.
Note:
SI: Safety Integrated
SLP: Safely-Limited Position / SE: Safe software limit switches

F01685 SI Motion CU: Safely-limited speed limit value too high

Message value: %1
Drive object: SERVO_S110-CAN, SERVO_S110-DP, SERVO_S110-PN
Reaction: OFF2
Acknowledge: IMMEDIATELY (POWER ON)
Cause: The limit value for the function "Safely-Limited Speed" (SLS) is greater than the speed that corresponds to an encoder limit frequency of 500 kHz.
Note:
This fault does not result in a safety stop response.
Fault value (r0949, interpret decimal):
Maximum permissible speed.
Remedy: Correct the limit values for SLS and carry out a POWER ON.
Note:
SI: Safety Integrated
SLS: Safely-Limited Speed / SG: Safely reduced speed
See also: p9531 (SI Motion SLS limit values (processor 1))

F01686 SI Motion: Illegal parameterization cam position

Message value: %1
Drive object: SERVO_S110-CAN, SERVO_S110-DP, SERVO_S110-PN
Reaction: OFF2
Acknowledge: IMMEDIATELY (POWER ON)
Cause: At least one enabled "Safety Cam" (SCA) is parameterized in p9536 or p9537 too close to the tolerance range around the modulo position.
The following conditions must be complied with to assign cams to a cam track:
- the cam length of cam x = p9536[x]-p9537[x] must be greater or equal to the cam tolerance + the position tolerance (= p9540 + p9542). This also means that for cams on a cam track, the minus position value must be less than the plus position value.
- the distance between 2 cams x and y (minus position value[y] - plus position value[x] = p9537[y] - p9536[x]) on a cam track must be greater than or equal to the cam tolerance + position tolerance (= p9540 + p9542).
Note:
This fault does not result in a safety stop response.
Fault value (r0949, interpret decimal):
Number of the "Safe Cam" with an illegal position.
See also: p9501 (SI Motion enable safety functions (processor 1))

Remedy: Correct the cam position and carry out a POWER ON.
Note:
SCA: Safe Cam / SN: Safe software cam
SI: Safety Integrated
See also: p9536 (SI Motion SCA plus cam position (processor 1)), p9537 (SI Motion SCA minus cam position (processor 1))

F01687 SI Motion: Illegal parameterization modulo value SCA (SN)

Message value: -
Drive object: SERVO_S110-CAN, SERVO_S110-DP, SERVO_S110-PN
Reaction: OFF2
Acknowledge: IMMEDIATELY (POWER ON)
Cause: The parameterized modulo value for the "Safe Cam" (SCA) function is not a multiple of 360 000 mDegrees.
Note:
This fault does not result in a safety stop response.
Remedy: Correct the modulo value for SCA and carry out a POWER ON.
Note:
SCA: Safe Cam / SN: Safe software cam
SI: Safety Integrated
See also: p9505 (SI Motion SCA (SN) modulo value (Control Unit))

F01688 SI Motion CU: Actual value synchronization not permissible

Message value: -
Drive object: SERVO_S110-CAN, SERVO_S110-DP, SERVO_S110-PN
Reaction: OFF2
Acknowledge: IMMEDIATELY (POWER ON)
Cause: - It is not permissible to enable actual value synchronization for a 1-encoder system.
- It is not permissible to simultaneously enable actual value synchronization and a monitoring function with absolute reference (SCA/SLP).
Note:
This fault results in a STOP A that cannot be acknowledged.
Remedy: - Either select the "actual value synchronization" function or parameterize a 2-encoder system.
- Either de-select the function "actual value synchronization" or the monitoring functions with absolute reference (SCA/SLP) and carry out a POWER ON.
Note:
SCA: Safe Cam / SN: Safe software cam
SI: Safety Integrated
SLP: Safely-Limited Position / SE: Safe software limit switches
See also: p9501 (SI Motion enable safety functions (processor 1))

C01689 SI Motion: Axis re-configured

Message value: Parameter: %1
Drive object: SERVO_S110-CAN, SERVO_S110-DP, SERVO_S110-PN
Reaction: OFF2
Acknowledge: POWER ON
Cause: The axis configuration was changed (e.g. changeover between linear axis and rotary axis).
Parameter p0108.13 is internally set to the correct value.
Note:
This fault does not result in a safety stop response.
Fault value (r0949, interpret decimal):
Parameter number of parameter that initiated the change.
See also: p9502 (SI Motion axis type (processor 1))
Remedy: The following should be carried out after the changeover:
- exit the safety commissioning mode (p0010).
- save all parameters (p0977 = 1 or "copy RAM to ROM").
- carry out a POWER ON.

Once the Control Unit has been switched on, safety message F01680 or F30680 indicates that the checksums in r9398[0] and r9728[0] have changed in the drive. The following must, therefore, be carried out:

- activate safety commissioning mode again.
- complete safety commissioning of the drive.
- exit the safety commissioning mode (p0010).
- save all parameters (p0977 = 1 or "copy RAM to ROM").
- carry out a POWER ON.

Note:

For the commissioning software, the units are only consistently displayed after a project upload.

F01690 SI Motion: Data save problem for the NVRAM

Message value: %1

Drive object: All objects

Reaction: NONE (OFF1, OFF2, OFF3)

Acknowledge: POWER ON

Cause: There is not sufficient memory space in the NVRAM on the drive to save parameters r9781 and r9782 (safety logbook).

Note:

This fault does not result in a safety stop response.

Fault value (r0949, interpret decimal):

0: There is no physical NVRAM available in the drive.

1: There is no longer any free memory space in the NVRAM.

Remedy: For fault value = 0:

- use a Control Unit NVRAM.

For fault value = 1:

- de-select functions that are not required and that take up memory space in the NVRAM.
- contact the Hotline.

Note:

NVRAM: Non-Volatile Random Access Memory (non-volatile read and write memory)

A01691 (F) SI Motion: Ti and To unsuitable for DP cycle

Message value: -

Drive object: SERVO_S110-CAN, SERVO_S110-DP, SERVO_S110-PN

Reaction: NONE

Acknowledge: NONE

Cause: The configured times for PROFIBUS communication are not permitted and the DP cycle is used as the actual value acquisition cycle for the safe movement monitoring functions:

Isochronous PROFIBUS: the total of Ti and To is too high for the set DP cycle. The DP cycle should be at least 1 current controller cycle greater than the sum of Ti and To.

Non-isochronous PROFIBUS: the DP cycle must be at least 4 x current controller cycle.

Remedy: Configure Ti and To low so that they are suitable for the DP cycle or increase the DP cycle time.

Alternative when SI monitoring integrated in the drive is enabled (p9601/p9801 > 0):

Use the actual value acquisition cycle p9511/p9311 and, in turn, set independently from DP cycle. The actual value sensing clock cycle must be at least four times the current controller clock cycle. A clock cycle ratio of at least 8:1 is recommended.

See also: p9511 (SI Motion actual value sensing clock cycle (processor 1))

Reaction upon F: NONE (OFF1, OFF2, OFF3)

Acknowl. upon F: IMMEDIATELY (POWER ON)

F01692	SI Motion CU: Parameter value not permitted for encoderless
Message value:	Parameter: %1
Drive object:	SERVO_S110-CAN, SERVO_S110-DP, SERVO_S110-PN
Reaction:	OFF2
Acknowledge:	IMMEDIATELY (POWER ON)
Cause:	The parameter cannot be set to this value if encoderless motion monitoring functions have been selected in p9506. Note: This fault does not result in a safety stop response. Fault value (r0949, interpret decimal): Parameter number with the incorrect value. See also: p9501 (SI Motion enable safety functions (processor 1))
Remedy:	- Correct the parameter specified in the fault value. - If necessary, de-select encoderless motion monitoring functions (p9506). See also: p9501 (SI Motion enable safety functions (processor 1))

A01693 (F)	SI CU: Safety parameter settings changed, warm restart/POWER ON required
Message value:	%1
Drive object:	SERVO_S110-CAN, SERVO_S110-DP, SERVO_S110-PN
Reaction:	NONE
Acknowledge:	NONE
Cause:	Safety parameters have been changed; these will only take effect following a warm restart or POWER ON. Alarm value (r2124, interpret decimal): Parameter number of the safety parameter which has changed, necessitating a warm restart or POWER ON.
Remedy:	- carry out a warm restart (p0009 = 30, p0976 = 2, 3). - carry out a POWER ON (power off/on) for all components. Note: Before performing an acceptance test, a POWER ON must be carried out for all components.
Reaction upon F:	NONE (OFF1, OFF2, OFF3)
Acknowl. upon F:	POWER ON

A01695 (F)	SI Motion: Sensor Module was replaced
Message value:	%1
Drive object:	SERVO_S110-CAN, SERVO_S110-DP, SERVO_S110-PN
Reaction:	NONE
Acknowledge:	NONE
Cause:	A Sensor Module, which is used for safe motion monitoring functions, was replaced. The hardware replacement must be acknowledged. An acceptance test must be subsequently performed. Note: This message does not result in a safety stop response.
Remedy:	Carry out the following steps using the STARTER commissioning software: - press the "Acknowledge hardware replacement" button in the safety screen form. - execute the function "Copy RAM to ROM". - carry out a POWER ON (power off/on) for all components. As an alternative, carry out the following steps in the expert list of the commissioning software: - start the copy function for the node identifier on the drive (p9700 = 1D hex). - acknowledge the hardware CRC on the drive (p9701 = EC hex). - save all parameters (p0977 = 1). - carry out a POWER ON (power off/on) for all components. Then carry out an acceptance test (refer to the Safety Integrated Function Manual). See also: p9700 (SI Motion copy function), p9701 (Acknowledge SI motion data change)
Reaction upon F:	NONE (OFF1, OFF2, OFF3)
Acknowl. upon F:	IMMEDIATELY (POWER ON)

A01696 (F) SI Motion: Testing of the motion monitoring functions selected when booting

Message value: -
Drive object: SERVO_S110-CAN, SERVO_S110-DP, SERVO_S110-PN
Reaction: NONE
Acknowledge: NONE
Cause: The test of the motion monitoring functions was already illegally active when booting.
This is the reason that the test is only carried out again after selecting the forced checking procedure parameterized in p9705.
Note:
This message does not result in a safety stop response.
See also: p9705 (SI Motion: Test stop signal source)
Remedy: De-select the forced checking procedure of the safety motion monitoring functions and then select again.
The signal source for initiation is parameterized in binector input p9705.
Note:
SI: Safety Integrated
See also: p9705 (SI Motion: Test stop signal source)
Reaction upon F: NONE (OFF1, OFF2, OFF3)
Acknowl. upon F: IMMEDIATELY (POWER ON)

A01697 (F) SI Motion: Motion monitoring functions must be tested

Message value: -
Drive object: SERVO_S110-CAN, SERVO_S110-DP, SERVO_S110-PN
Reaction: NONE
Acknowledge: NONE
Cause: The time set in p9559 for the forced checking procedure of the safety motion monitoring functions has been exceeded. A new test is required.
After next selecting the forced checking procedure parameterized in p9705, the message is withdrawn and the monitoring time is reset.
Note:
This message does not result in a safety stop response.
As the shutdown paths are not automatically checked during booting, an alarm is always issued once booting is complete.
See also: p9559 (SI Motion forced checking procedure timer (processor 1)), p9705 (SI Motion: Test stop signal source)
Remedy: Carry out the forced checking procedure of the safety motion monitoring functions.
The signal source for initiation is parameterized in binector input p9705.
Note:
SI: Safety Integrated
See also: p9705 (SI Motion: Test stop signal source)
Reaction upon F: NONE (OFF1, OFF2, OFF3)
Acknowl. upon F: IMMEDIATELY (POWER ON)

A01698 (F) SI CU: Commissioning mode active

Message value: -
Drive object: SERVO_S110-CAN, SERVO_S110-DP, SERVO_S110-PN
Reaction: NONE
Acknowledge: NONE
Cause: The commissioning of the "Safety Integrated" function is selected.
This message is withdrawn after the safety functions have been commissioned.
Note:
This message does not result in a safety stop response.
See also: p0010 (Drive commissioning parameter filter)
Remedy: Not necessary.
Note:
CU: Control Unit
SI: Safety Integrated

Reaction upon F: NONE (OFF1, OFF2, OFF3)
Acknowl. upon F: IMMEDIATELY (POWER ON)

A01699 (F) SI CU: Shutdown path must be tested

Message value: -
Drive object: SERVO_S110-CAN, SERVO_S110-DP, SERVO_S110-PN
Reaction: NONE
Acknowledge: NONE
Cause: The time set in p9659 for the forced checking procedure of the safety shutdown paths has been exceeded. The safety shutdown paths must be re-tested.
After the next time the "STO" function is de-selected, the message is withdrawn and the monitoring time is reset.
Note:
This message does not result in a safety stop response.
See also: p9659 (SI forced checking procedure timer)
Remedy: Select STO and then de-select again.
Note:
CU: Control Unit
SI: Safety Integrated
STO: Safe Torque Off / SH: Safe standstill
Reaction upon F: NONE (OFF1, OFF2, OFF3)
Acknowl. upon F: IMMEDIATELY (POWER ON)

C01700 SI Motion CU: STOP A initiated

Message value: -
Drive object: SERVO_S110-CAN, SERVO_S110-DP, SERVO_S110-PN
Reaction: OFF2
Acknowledge: IMMEDIATELY (POWER ON)
Cause: The drive is stopped via a STOP A (pulses are suppressed via the safety shutdown path of the Control Unit).
Possible causes:
- stop request from the 2nd monitoring channel.
- pulses not suppressed after a parameterized time (p9557) after test stop selection.
- subsequent response to the message C01706 "SI Motion CU: SAM/SBR limit exceeded".
- subsequent response to the message C01714 "SI Motion CU: Safely-Limited Speed exceeded".
- subsequent response to the message C01701 "SI Motion CU: STOP B initiated".
Remedy: - remove the cause of the fault on the 2nd monitoring channel.
- carry out a diagnostics routine for message C01706.
- carry out a diagnostics routine for message C01714.
- carry out a diagnostics routine for message C01701.
- check the value in p9557 (where available), increase the value if necessary, and carry out a POWER ON
- check the shutdown path of the Control Unit (check DRIVE-CLiQ communication if it has been implemented)
- replace the Motor Module/Power Module
- replace Control Unit.
This message can be acknowledged without a POWER ON as follows:
- motion monitoring functions integrated in the drive: via Terminal Module 54F (TM54F) or PROFIsafe
- motion monitoring functions with SINUMERIK: via the machine control panel in acceptance test mode only
Note:
SAM: Safe Acceleration Monitor (safe acceleration monitoring)
SBR: Safe Brake Ramp (safe brake ramp monitoring)
SI: Safety Integrated

C01701 SI Motion CU: STOP B initiated

Message value: -

Drive object: SERVO_S110-CAN, SERVO_S110-DP, SERVO_S110-PN

Reaction: OFF3

Acknowledge: IMMEDIATELY (POWER ON)

Cause: The drive is stopped via a STOP B (braking along the OFF3 deceleration ramp).
As a result of this fault, after the time parameterized in p9556 has expired, or the speed threshold parameterized in p9560 has been undershot, message C01700 "STOP A initiated" is output.
Possible causes:
- stop request from the second monitoring channel.
- subsequent response to the message C01714 "SI Motion CU: Safely-Limited Speed exceeded".
- subsequent response to the message C01711 "SI Motion CU: Defect in a monitoring channel".
- subsequent response to the message C01707 "SI Motion CU: tolerance for safe operating stop exceeded".

Remedy: - remove the cause of the fault on the second monitoring channel.
- carry out a diagnostics routine for message C01714.
- carry out a diagnostics routine for message C01711.
- carry out a diagnostics routine for message C01707.
This message can be acknowledged without a POWER ON as follows:
- motion monitoring functions integrated in the drive: via Terminal Module 54F (TM54F) or PROFIsafe
- motion monitoring functions with SINUMERIK: via the machine control panel in acceptance test mode only
Note:
SI: Safety Integrated

C01706 SI Motion CU: SAM/SBR limit exceeded

Message value: -

Drive object: SERVO_S110-CAN, SERVO_S110-DP, SERVO_S110-PN

Reaction: NONE

Acknowledge: IMMEDIATELY (POWER ON)

Cause: Motion monitoring functions with encoder (p9506 = 0) or encoderless with set acceleration monitoring (p9506 = 3):
SAM - safe acceleration monitoring. After initiating STOP B (SS1) or STOP C (SS2), the speed has exceeded the selected tolerance.
Motion monitoring functions encoderless with set brake ramp monitoring (p9506 = 1):
SBR - Safe brake ramp monitoring. After initiating STOP B (SS1) or SLS changeover to the lower speed stage, the speed has exceeded the selected tolerance.
The drive is shut down by the message C01700 "SI Motion: STOP A initiated".

Remedy: Check the braking behavior and, if necessary, adapt the tolerance for the "SAM" function or modify the parameter settings for the "SBR" function.
This message can be acknowledged without a POWER ON as follows:
- motion monitoring functions integrated in the drive: via Terminal Module 54F (TM54F) or PROFIsafe
- motion monitoring functions with SINUMERIK: via the machine control panel in acceptance test mode only
Note:
SAM: Safe Acceleration Monitor (safe acceleration monitoring)
SBR: Safe Brake Ramp (safe ramp monitoring)
SI: Safety Integrated
See also: p9548 (SI Motion SBR actual velocity tolerance (processor 1)), p9581 (SI Motion brake ramp reference value (processor 1)), p9582 (SI Motion brake ramp delay time (processor 1)), p9583 (SI Motion brake ramp monitoring time (processor 1))

C01707 SI Motion CU: Tolerance for safe operating stop exceeded

Message value: -

Drive object: SERVO_S110-CAN, SERVO_S110-DP, SERVO_S110-PN

Reaction: NONE

Acknowledge: IMMEDIATELY (POWER ON)

Cause: The actual position has distanced itself further from the target position than the standstill tolerance.
The drive is shut down by the message C01701 "SI Motion: STOP B initiated".

Remedy: - check whether safety faults are present and if required carry out the appropriate diagnostic routines for the particular faults.
- check whether the standstill tolerance matches the accuracy and control dynamic performance of the axis.
- carry out a POWER ON.
This message can be acknowledged without a POWER ON as follows:
- motion monitoring functions integrated in the drive: via Terminal Module 54F (TM54F) or PROFIsafe
- motion monitoring functions with SINUMERIK: via the machine control panel in acceptance test mode only
Note:
SI: Safety Integrated
SOS: Safe Operating Stop / SBH: Safe operating stop
See also: p9530 (SI Motion standstill tolerance (processor 1))

C01708 SI Motion CU: STOP C initiated

Message value: -
Drive object: SERVO_S110-CAN, SERVO_S110-DP, SERVO_S110-PN
Reaction: STOP2
Acknowledge: IMMEDIATELY (POWER ON)
Cause: The drive is stopped via a STOP C (braking along the OFF3 deceleration ramp).
"Safe Operating Stop" (SOS) is activated after the parameterized timer has expired.
Possible causes:
- stop request from the higher-level control.
- subsequent response to the message C01714 "SI Motion: Safely limited speed exceeded".
- subsequent response to the message C01715 "SI Motion: Safe end stop exceeded".
See also: p9552 (SI Motion transition time STOP C to SOS (processor 1))
Remedy: - remove the cause of the fault at the control.
- carry out a diagnostics routine for message C01714.
This message can be acknowledged as follows:
- motion monitoring functions integrated in the drive: Via Terminal Module 54F (TM54F) or PROFIsafe
- motion monitoring functions with SINUMERIK: Via the machine control panel
Note:
SI: Safety Integrated
SOS: Safe Operating Stop / SBH: Safe operating stop

C01709 SI Motion CU: STOP D initiated

Message value: -
Drive object: SERVO_S110-CAN, SERVO_S110-DP, SERVO_S110-PN
Reaction: NONE
Acknowledge: IMMEDIATELY (POWER ON)
Cause: The drive is stopped via a STOP D (braking along the path).
"Safe Operating Stop" (SOS) is activated after the parameterized timer has expired.
Possible causes:
- stop request from the higher-level control.
- subsequent response to the message C01714 "SI Motion: Safely limited speed exceeded".
- subsequent response to the message C01715 "SI Motion: Safe end stop exceeded".
See also: p9553 (SI Motion transition time STOP D to SOS (processor 1))
Remedy: - remove the cause of the fault at the control.
- carry out a diagnostics routine for message C01714.
This message can be acknowledged as follows:
- motion monitoring functions integrated in the drive: Via Terminal Module 54F (TM54F) or PROFIsafe
- motion monitoring functions with SINUMERIK: Via the machine control panel
Note:
SI: Safety Integrated
SOS: Safe Operating Stop / SBH: Safe operating stop

C01710 SI Motion CU: STOP E initiated

Message value: -

Drive object: SERVO_S110-CAN, SERVO_S110-DP, SERVO_S110-PN

Reaction: NONE

Acknowledge: IMMEDIATELY (POWER ON)

Cause: The drive is stopped via a STOP E (retraction motion).
"Safe Operating Stop" (SOS) is activated after the parameterized timer has expired.
Possible causes:
- stop request from the higher-level control.
- subsequent response to the message C01714 "SI Motion: Safely limited speed exceeded".
- subsequent response to the message C01715 "SI Motion: Safe end stop exceeded".

Remedy: - remove the cause of the fault at the control.
- carry out a diagnostics routine for message C01714.
This message can be acknowledged as follows:
- motion monitoring functions integrated in the drive: Via Terminal Module 54F (TM54F) or PROFIsafe
- motion monitoring functions with SINUMERIK: Via the machine control panel
Note:
SI: Safety Integrated
SOS: Safe Operating Stop / SBH: Safe operating stop

C01711 SI Motion CU: Defect in a monitoring channel

Message value: %1

Drive object: SERVO_S110-CAN, SERVO_S110-DP, SERVO_S110-PN

Reaction: NONE

Acknowledge: IMMEDIATELY (POWER ON)

Cause: When cross-comparing the two monitoring channels, the drive detected a difference between the input data or results of the monitoring functions and initiated a STOP F. One of the monitoring functions no longer reliably functions - i.e. safe operation is no longer possible.
If at least one monitoring function is active, then after the parameterized timer has expired, the message C01701 "SI Motion: STOP B initiated" is output.
The message value that resulted in a STOP F is displayed in r9725. The described message values involve the crosswise data comparison between the Control Unit and Motor Module. If the drive is operated together with a SINUMERIK, the message values are described in message 27001 of SINUMERIK.
The following message values may also occur in the following cases if the cause that is explicitly mentioned does not apply:
- cycle times not set uniformly (p9500/p9300 and p9511/p9311)
- differently parameterized axis types (p9502/p9302).
- excessively fast cycle times (p9500/p9300, p9511/p9311).
- for message values 3, 44 ... 57, 232 and 1-encoder systems, differently parameterized encoder values (p9516/p9316, p9517/p9317, p9518/p9318, p9520/p9320, p9521/p9321, p9522/p9322, p9526/p9326).
- incorrect synchronization.
Message value (r9749, interpret decimal):
0 to 999: Number of the cross-compared data that resulted in this fault.
Message values that are not subsequently listed are only for internal Siemens troubleshooting.
0: Stop request from the other monitoring channel.
1: Status image of monitoring functions SOS, SLS or SLP (result list 1) (r9710[0], r9710[1]).
2: Status image of monitoring function SCA or n < nx (result list 2) (r9711[0], r9711[1]).
3: The position actual value differential (r9713) between the two monitoring channels is greater than the tolerance in p9542/p9342. When actual value synchronization is enabled (p9501.3/p9301.3), the velocity differential (based on the position actual value) is greater than the tolerance in p9549/p9349.
4: Error when synchronizing the crosswise data comparison between the two channels.
5: Function enable signals (p9501/p9301)
6: Limit value for SLS1 (p9531[0]/p9331[0])
7: Limit value for SLS2 (p9531[1]/p9331[1])
8: Limit value for SLS3 (p9531[2]/p9331[2])
9: Limit value for SLS4 (p9531[3]/p9331[3])

10: Standstill tol. (p9530/p9330)

31: Position tolerance (p9542/p9342) or (p9549/p9349) when actual value synchronization is enabled (p9501.3/p9301.3)

33: Time, velocity changeover (p9551/p9351)

35: Delay time, pulse canc. (p9556/p9356)

36: Checking time, pulse canc. (p9557/p9357)

37: Trans. time, STOP C to SOS (p9552/p9352)

38: Trans. time STOP D to SOS (p9553/p9353)

40: Stop response for SLS (p9561/p9361)

42: Shutdown speed, pulse canc. (p9560/p9360)

43: Memory test, stop response (STOP A).

44 ... 57: General

Possible cause 1 (during commissioning or parameter modification)

The tolerance value for the monitoring function is not the same on the two monitoring channels.

Possible cause 2 (during active operation)

The limit values are based on the actual value (r9713). If the safe actual values on the two monitoring channels do not match, the limit values, which have been set at a defined interval, will also be different (i.e. corresponding to fault value 3). This can be ascertained by checking the safe actual positions.

44: Position actual value (r9713) + limit value for SLS1 (p9531[0]/p9331[0]) * Safety monitoring clock cycle

45: Position actual value (r9713) - limit value for SLS1 (p9531[0]/p9331[0]) * Safety monitoring clock cycle

46: Position actual value (r9713) + limit value for SLS2 (p9531[1]/p9331[1]) * Safety monitoring clock cycle

47: Position actual value (r9713) - limit value for SLS2 (p9531[1]/p9331[1]) * Safety monitoring clock cycle

48: Position actual value (r9713) + limit value for SLS3 (p9531[2]/p9331[2]) * Safety monitoring clock cycle

49: Position actual value (r9713) - limit value for SLS3 (p9531[2]/p9331[2]) * Safety monitoring clock cycle

50: Position actual value (r9713) + limit value for SLS4 (p9531[3]/p9331[3]) * Safety monitoring clock cycle

51: Position actual value (r9713) - limit value for SLS4 (p9531[3]/p9331[3]) * Safety monitoring clock cycle

52: Standstill position + tolerance (p9530/9330)

53: Standstill position - tolerance (p9530/9330)

54: Position actual value (r9713) + limit value nx (p9546/p9346) + tolerance (p9542/p9342)

55: Position actual value (r9713) + limit value nx (p9546/p9346)

56: Position actual value (r9713) - limit value nx (p9546/p9346)

57: Position actual value (r9713) - limit value nx (p9546/p9346) - tolerance (p9542/p9342)

58: Actual stop request.

75: Velocity limit nx (p9546, p9346).

76: Stop response for SLS1 (p9563[0]/p9363[0])

77: Stop response for SLS2 (p9563[1]/p9363[1])

78: Stop response for SLS3 (p9563[2]/p9363[2])

79: Stop response for SLS4 (p9563[3]/p9363[3])

81: Velocity tolerance for SAM (p9548/p9348)

82: SGEs for SLS correction factor.

83: Acceptance test timer (p9558/p9358)

84: Trans. time STOP F (p9555/p9355)

85: Trans. time bus failure (p9580/p9380)

86: ID 1-encoder system (p9526/p9326).

87: Encoder assignment, second channel (p9526/p9326)

89: Encoder limit freq.

230: Filter time constant for n < nx.

231: Hysteresis tolerance for n < nx.

232: Smoothed velocity actual value.

233: Limit value nx / safety monitoring clock cycle + hysteresis tolerance.

234: Limit value nx / Safety monitoring clock cycle.

235: -Limit value nx / Safety monitoring clock cycle.

236: -Limit value nx / safety monitoring clock cycle - hysteresis tolerance.

237: SGA n < nx.

238: Speed limit value for SAM (p9568/p9368).

239: Acceleration for SBR (p9581/p9381 and p9583/p9383).
240: Inverse value of acceleration for SBR (p9581/p9381 and p9583/p9383).
241: Deceleration time for SBR (p9582/p9382).
242: Encoderless safety (p9506/p9306).
243: Extended alarm acknowledgment (p9507/p9307).
244: Encoderless actual value sensing filter time (p9587/p9387).
245: Encoderless actual value sensing minimum current (p9588/p9388).
246: Voltage tolerance acceleration (p9589/p9389).
247: SDI tolerance (p9564/p9364).
248: SDI positive upper limit (0x7fffffff).
249: Position actual value (r9713) - SDI tolerance.
250: Position actual value (r9713) + SDI tolerance.
251: SDI negative lower limit (0x80000001).
252: SDI stop response (p9566/p9366).
253: SDI delay time (p9565/p9365).
254: Setting the evaluation delay for actual value sensing after pulse enable (p9586/p9386).
255: Setting, behavior during pulse suppression (p9509/p9309).
256: Status image of monitoring functions SOS, SLS, SLP, test stop, SBR, SDI (result list 1 ext) (r9710).
1000: Watchdog timer has expired. Too many signal changes have occurred at safety-relevant inputs.
1001: Initialization error of watchdog timer.
1005: Pulses already suppressed for test stop selection.
1011: Acceptance test status between the monitoring channels differ.
1012: Plausibility violation of the actual value from the encoder.
1020: Cyc. communication failure between the monit. cycles.
1021: Cyc. communication failure between the monit. channel and Sensor Module.
1022: Sign-of-life error for DRIVE-CLiQ encoder CU
1023: Error in the effectiveness test in the DRIVE-CLiQ encoder
1032: Sign-of-life error for DRIVE-CLiQ encoder MM
1033: Error checking offset between POS1 and POS2 for DRIVE-CLiQ encoder CU
1034: Error checking offset between POS1 and POS2 for DRIVE-CLiQ encoder MM
1041: Current absolute value too low (encoderless)
1042: Current/voltage plausibility error
1043: Too many acceleration phases
1044: Actual current values plausibility error.
5000 ... 5140:
PROFIsafe message values.
For these fault values, the failsafe control signals (failsafe values) are transferred to the safety functions.
5000, 5014, 5023, 5024, 5030 ... 5032, 5042, 5043, 5052, 5053, 5068, 5072, 5073, 5082 ... 5087, 5090, 5091, 5122 ... 5125, 5132 ... 5135, 5140: An internal software error has occurred (only for internal Siemens troubleshooting).
5012: Error when initializing the PROFIsafe driver.
5013: The result of the initialization is different for the two controllers.
5022: Error when evaluating the F parameters. The values of the transferred F parameters do not match the expected values in the PROFIsafe driver.
5025: The result of the F parameterization is different for the two controllers.
5026: CRC error for the F parameters. The transferred CRC value of the F parameters does not match the value calculated in the PST.
5065: A communications error was identified when receiving the PROFIsafe telegram.
5066: A time monitoring error (timeout) was identified when receiving the PROFIsafe telegram.
6000 ... 6166:
PROFIsafe message values (PROFIsafe driver for PROFIBUS DP V1/V2 and PROFINET).
For these fault values, the failsafe control signals (failsafe values) are transferred to the safety functions.
6000: A fatal PROFIsafe communication error has occurred.
6064 ... 6071: Error when evaluating the F parameters. The values of the transferred F parameters do not match the expected values in the PROFIsafe driver.
6064: Destination address and PROFIsafe address are different (F_Dest_Add).
6065: Destination address not valid (F_Dest_Add).

6066: Source address not valid (F_Source_Add).

6067: Watchdog time not valid (F_WD_Time).

6068: Incorrect SIL level (F_SIL).

6069: Incorrect F-CRC length (F_CRC_Length).

6070: Incorrect F parameter version (F_Par_Version).

6071: CRC error for the F parameters (CRC1). The transferred CRC value of the F parameters does not match the value calculated in the PROFIsafe driver.

6072: F parameterization is inconsistent.

6165: A communications error was identified when receiving the PROFIsafe telegram. The fault may also occur if an inconsistent or out-of-date PROFIsafe telegram has been received after switching the Control Unit off and on or after plugging in the PROFIBUS/PROFINET cable.

6166: A time monitoring error (timeout) was identified when receiving the PROFIsafe telegram.

See also: p9555 (SI Motion transition time STOP F to STOP B (processor 1)), r9725 (SI Motion diagnostics STOP F)

Remedy: The following generally applies:

The monitoring clock cycles in both channels and the axis types should be checked for equality and the same setting applied if necessary. If the error continues to be identified, increasing the monitoring clock cycles may resolve it.

Re message value = 0:

- no error was identified in this monitoring channel. Note the error message of the other monitoring channel (for MM: C30711).

Re message value = 3:

Commissioning phase:

Encoder evaluation for own or second channel has been set incorrectly --> Correct the encoder evaluation.

In operation:

Check the mechanical design and the encoder signals.

Re message value = 4:

The monitoring clock cycles in both channels should be checked for equality and if required, set the same. In combination with fault value 5 from the other monitoring channel (with MM: C30711), the monitoring clock cycle settings must be increased.

Re message value = 232:

-increase the hysteresis tolerance (p9547/p9347). Possibly set the filtering higher (p9545/p9345).

Re message value = 1 ... 999:

- if the message value is listed under cause: Check the crosswise-compared parameters to which the message value refers.

- copy the safety parameters.

- carry out a POWER ON (power off/on) for all components.

- upgrade the Motor Module software.

- upgrade the Control Unit software.

- correction of the encoder evaluation. The actual values differ as a result of mechanical faults (V belts, travel to a mechanical endstop, wear and window setting that is too narrow, encoder fault, ...).

Re message value = 1000:

- investigate the signal associated with the safety-relevant input (contact problems).

Re message value = 1001:

- carry out a POWER ON (power off/on) for all components.

- upgrade the Motor Module software.

- upgrade the Control Unit software.

Re message value = 1005:

- check the conditions for pulse enable.

Re message value = 1011:

- for diagnostics, refer to parameter (r9571).

Re message value = 1012:

- upgrade the Sensor Module software.

- for 1-encoder systems, check the encoder parameters for equality (p9515/p9315, p9519/p9319, p9523/p9323, p9524/p9324, p9525/p9325, p9529/p9329).

- For DQI encoders the following applies: If required, upgrade the firmware version of the Control Unit to a more recent version, which is released for DQI encoders.

Re message value = 1020, 1021:

- check the communication link.
- increase the monitoring cycle clock settings (p9500, p9511).
- carry out a POWER ON (power off/on) for all components.
- replace the hardware.

Re message value = 1033:

- If required, upgrade the firmware version of the Control Unit to a more recent version, which is released for DQI encoders.

Re message value = 1041:

- reduce the minimum current (p9588).
- for synchronous motors increase the absolute value of p9783.
- Check whether the function "Closed-loop controlled operation with HF signal injection" is activated (p1750.5 = 1) and if required, deactivate.

Re message value = 1042:

- increase the ramp-function generator ramp-up/down time (p1120/p1121).
- check that the current/speed control is set correctly (torque-generating/field-generating current and actual speed value may not fluctuate).
- reduce the dynamic response of the setpoint value.
- increase the minimum current (p9588).

Re message value = 1043:

- increase the voltage tolerance (p9589).
- increase the ramp-function generator ramp-up/down time (p1120/p1121).
- check that the current/speed control is set correctly (torque-generating/field-generating current and actual speed value may not fluctuate).
- reduce the dynamic response of the setpoint value.

Re message value = 5000, 5014, 5023, 5024, 5030, 5031, 5032, 5042, 5043, 5052, 5053, 5068, 5072, 5073, 5082 ... 5087, 5090, 5091, 5122 ... 5125, 5132 ... 5135, 5140:

- carry out a POWER ON (power off/on) for all components.
- check whether there is a DRIVE-CLiQ communication error between the Control Unit and the Motor Module involved and, if required, carry out a diagnostics routine for the faults identified.
- upgrade firmware to later version.
- contact the Hotline.
- replace the Control Unit.

Re message value = 5012:

- check the setting of the PROFIsafe address of the Control Unit (p9610) and that of the Motor Module (p9810). It is not permissible for the PROFIsafe address to be 0 or FFFF!

Re message value = 5013, 5025:

- carry out a POWER ON (power off/on) for all components.
- check the setting of the PROFIsafe address of the Control Unit (p9610) and that of the Motor Module (p9810).
- check whether there is a DRIVE-CLiQ communication error between the Control Unit and the Motor Module involved and, if required, carry out a diagnostics routine for the faults identified.

Re message value = 5022:

- check the setting of the values of the F parameters at the PROFIsafe slave (F_SIL, F_CRC_Length, F_Par_Version, F_Source_Add, F_Dest_add, F_WD_Time).

Re message value = 5026:

- check the settings of the values of the F parameters and the F parameter CRC (CRC1) calculated from these at the PROFIsafe slave and update.

Re message value = 5065:

- check the configuration and communication at the PROFIsafe slave (cons. No. / CRC).
- check the setting of the value for F parameter F_WD_Time on the PROFIsafe slave and increase if necessary.
- check whether there is a DRIVE-CLiQ communication error between the Control Unit and the Motor Module involved and, if required, carry out a diagnostics routine for the faults identified.

Re message value = 5066:

- check the setting of the value for F parameter F_WD_Time on the PROFIsafe slave and increase if necessary.
- evaluate diagnostic information in the F host.
- check PROFIsafe connection.

Re message value = 6000:

- carry out a POWER ON (power off/on) for all components.
- check whether there is a DRIVE-CLiQ communication error between the Control Unit and the Motor Module involved and, if required, carry out a diagnostics routine for the faults identified.
- increase the monitoring cycle clock settings (p9500, p9511).
- upgrade firmware to later version.
- contact the Hotline.
- replace the Control Unit.

Re message value = 6064:

- check the setting of the value in the F parameter F_Dest_Add at the PROFIsafe slave.
- check the setting of the PROFIsafe address of the Control Unit (p9610) and that of the Motor Module (p9810).

Re message value = 6065:

- check the setting of the value in the F parameter F_Dest_Add at the PROFIsafe slave. It is not permissible for the destination address to be either 0 or FFFF!

Re message value = 6066:

- check the setting of the value in the F parameter F_Source_Add at the PROFIsafe slave. It is not permissible for the source address to be either 0 or FFFF!

Re message value = 6067:

- check the setting of the value in the F parameter F_WD_Time at the PROFIsafe slave. It is not permissible for the watch time to be 0!

Re message value = 6068:

- check the setting of the value in the F parameter F_SIL at the PROFIsafe slave. The SIL level must correspond to SIL2!

Re message value = 6069:

- check the setting of the value in the F parameter F_CRC_Length at the PROFIsafe slave. The setting of the CRC2 length is 2-byte CRC in the V1 mode and 3-byte CRC in the V2 mode!

Re message value = 6070:

- check the setting of the value in the F parameter F_Par_Version at the PROFIsafe slave. The value for the F parameter version is 0 in the V1 mode and 1 in the V2 mode!

Re message value = 6071:

- check the settings of the values of the F parameters and the F parameter CRC (CRC1) calculated from these at the PROFIsafe slave and, if required, update.

Re message value = 6072:

- check the settings of the values for the F parameters and, if required, correct.

The following combinations are permissible for F parameters F_CRC_Length and F_Par_Version:

F_CRC_Length = 2-byte CRC and F_Par_Version = 0

F_CRC_Length = 3-byte CRC and F_Par_Version = 1

Re message value = 6165:

- if the fault occurs after powering up the Control Unit or after plugging in the PROFIBUS/PROFINET cable, acknowledge the fault.
- check the configuration and communication at the PROFIsafe slave.
- check the setting of the value for F parameter F_WD_Time on the PROFIsafe slave and increase if necessary.
- check whether there is a DRIVE-CLiQ communication error between the Control Unit and the Motor Module involved and, if required, carry out a diagnostics routine for the faults identified.

Re message value = 6166:

- check the configuration and communication at the PROFIsafe slave.
- check the setting of the value for F parameter F_WD_Time on the PROFIsafe slave and increase if necessary.
- evaluate diagnostic information in the F host.
- check PROFIsafe connection.

This message can be acknowledged as follows:

- motion monitoring functions integrated in the drive: Via Terminal Module 54F (TM54F) or PROFIsafe
- motion monitoring functions with SINUMERIK: Via the machine control panel

See also: p9300 (SI Motion monitoring clock cycle (processor 2)), p9500 (SI Motion monitoring clock cycle (processor 1))

C01712 SI Motion CU: Defect in F-IO processing

Message value: %1

Drive object: SERVO_S110-CAN, SERVO_S110-DP, SERVO_S110-PN

Reaction: NONE

Acknowledge: IMMEDIATELY (POWER ON)

Cause: When cross checking and comparing the two monitoring channels, the drive detected a difference between parameters or results of the F-IO processing and initiated a STOP F. One of the monitoring functions no longer reliably functions - i.e. safe operation is no longer possible.

The safety message C01711 with message value 0 is also displayed due to initiation of STOP F.

If at least one monitoring function is active, the safety message C01701 "SI Motion: STOP B initiated" is output after the parameterized timer has expired.

Message value (r9749, interpret decimal):

Number of the cross-compared data that resulted in this message.

1: SI discrepancy monitoring time inputs (p10002, p10102).

2: SI acknowledgement internal event input terminal (p10006, p10106).

3: SI STO input terminal (p10022, p10122).

4: SI SS1 input terminal (p10023, p10123).

5: SI SS2 input terminal (p10024, p10124).

6: SI SOS input terminal (p10025, p10125).

7: SI SLS input terminal (p10026, p10126).

8: SI SLS_Limit(1) input terminal (p10027, p10127).

9: SI SLS_Limit(2) input terminal (p10028, p10128).

10: SI Safe State signal selection (p10039, p10139).

11 SI F-DI input mode (p10040, p10140).

12: SI F-DO 0 signal sources (p10042, p10142).

13: Different states for static inactive signal sources (p10006, p10022 ... p10028).

14: SI discrepancy monitoring time outputs (p10002, p10102).

15: SI acknowledgment internal event (p10006, p10106).

16: SI test sensor feedback signal test mode selected for test stop (p10046, p10146, p10047, p10147).

17: SI delay time for test stop at DOs (p10001).

18 ... 25: SI test sensor feedback signal (p10046, p10146, p10047, p10147). Expected state of internal readback signal, generated from the selected test stop mode.

26 ... 33: SI test sensor feedback signal (p10046, p10146, p10047, p10147). Expected state of external readback signal, generated from the selected test stop mode.

34 ... 41: SI test sensor feedback signal (p10046, p10146, p10047, p10147). Expected state of second internal readback signal, generated from the selected test stop mode.

42: Internal data for processing the second internal readback signal, generated from the selected test stop mode (p10047, p10147).

43: Internal data for processing the internal readback signal, generated from the selected test stop mode (p10047, p10147).

44: Internal data for processing the external readback signal, generated from the selected test stop mode (p10047, p10147).

45: Internal data for initialization state of test stop mode, dependent upon test stop parameters.

46: SI digital inputs debounce time (p10017, p10117)

47: Selection F-DI for PROFIsafe (p10050, p10150)

48: Selection F-DI for PROFIsafe (p10050, p10150)

49: SI SDI positive input terminal (p10030, p10130).

50: SI SDI negative input terminal (p10031, p10131).

Remedy: - check parameterization in the parameters involved and correct if required.

- ensure equality by copying the SI data to the second channel and then carry out an acceptance test.

- check monitoring clock cycle in p9500 and p9300 for equality.

Note:

This message can be acknowledged via F-DI or PROFIsafe.

See also: p9300 (SI Motion monitoring clock cycle (processor 2)), p9500 (SI Motion monitoring clock cycle (processor 1))

C01714 SI Motion CU: Safely-Limited Speed exceeded

Message value: %1

Drive object: SERVO_S110-CAN, SERVO_S110-DP, SERVO_S110-PN

Reaction: NONE

Acknowledge: IMMEDIATELY (POWER ON)

Cause: The drive has moved faster than that specified by the velocity limit value (p9531). The drive is stopped as a result of the configured stop response (p9563).
Message value (r9749, interpret decimal):
100: SLS1 exceeded.
200: SLS2 exceeded.
300: SLS3 exceeded.
400: SLS4 exceeded.
1000: Encoder limit frequency exceeded.

Remedy: - check the traversing/motion program in the control.
- check the limits for "Safely-Limited Speed (SLS) and if required, adapt (p9531).
This message can be acknowledged as follows:
- motion monitoring functions integrated in the drive: Via Terminal Module 54F (TM54F) or PROFIsafe
- motion monitoring functions with SINUMERIK: Via the machine control panel
Note:
SI: Safety Integrated
SLS: Safely-Limited Speed / SG: Safely reduced speed
See also: p9531 (SI Motion SLS limit values (processor 1)), p9563 (SI Motion SLS-specific stop response (processor 1))

C01716 SI Motion CU: Tolerance for safe motion direction exceeded

Message value: %1

Drive object: SERVO_S110-CAN, SERVO_S110-DP, SERVO_S110-PN

Reaction: NONE

Acknowledge: IMMEDIATELY (POWER ON)

Cause: The tolerance for the "safe motion direction" function was exceeded. The drive is stopped as a result of the configured stop response (p9566).
Message value (r9749, interpret decimal):
0: Tolerance for the "safe motion direction positive" function exceeded.
1: Tolerance for the "safe motion direction negative" function exceeded.

Remedy: - check the traversing/motion program in the control.
- check the tolerance for "SDI" function and if required, adapt (p9564).
This message can be acknowledged as follows:
Via F-DI or PROFIsafe
Note:
SDI: Safe Direction (safe motion direction)
SI: Safety Integrated
See also: p9564 (SI Motion SDI tolerance (processor 1)), p9565 (SI Motion SDI delay time (processor 1)), p9566 (SI Motion SDI stop response (processor 1))

C01745 SI Motion CU: Checking braking torque for the brake test

Message value: -

Drive object: SERVO_S110-CAN, SERVO_S110-DP, SERVO_S110-PN

Reaction: NONE

Acknowledge: POWER ON (IMMEDIATELY)

Cause: The scaling of the brake torque for the brake test can be changed using parameter p2003.
An acceptance test must be carried out again for the braking test. This determines whether the braking test is still carried out with the correct braking torque.

Remedy: - carry out a POWER ON (power off/on) for all components.
- repeat the acceptance test for the safe brake test if the brake test is used.
See also: p2003 (Reference torque)

C01750 SI Motion CU: Hardware fault safety-relevant encoder

Message value: %1
Drive object: SERVO_S110-CAN, SERVO_S110-DP, SERVO_S110-PN
Reaction: NONE
Acknowledge: IMMEDIATELY (POWER ON)
Cause: The encoder that is used for the safety-relevant motion monitoring functions signals a hardware fault.
Message value (r9749, interpret decimal):
Encoder status word 1, encoder status word 2 that resulted in the message.
Remedy: - check the encoder connection.
- replace encoder.
This message can be acknowledged as follows:
- motion monitoring functions integrated in the drive: Via Terminal Module 54F (TM54F) or PROFIsafe
- motion monitoring functions with SINUMERIK: Via the machine control panel.

C01751 SI Motion CU: Effectivity test error safety-relevant encoder

Message value: %1
Drive object: SERVO_S110-CAN, SERVO_S110-DP, SERVO_S110-PN
Reaction: NONE
Acknowledge: IMMEDIATELY (POWER ON)
Cause: The DRIVE-CLiQ encoder for safe motion monitoring signals an error for the effectivity tests.
Message value (r9749, interpret decimal):
Only for internal Siemens troubleshooting.
Remedy: - check the encoder connection.
- replace encoder.
This message can be acknowledged as follows:
- motion monitoring functions integrated in the drive: Via Terminal Module 54F (TM54F) or PROFIsafe
- motion monitoring functions with SINUMERIK: Via the machine control panel

C01770 SI Motion CU: Discrepancy error of the failsafe inputs or outputs

Message value: %1
Drive object: SERVO_S110-CAN, SERVO_S110-DP, SERVO_S110-PN
Reaction: NONE
Acknowledge: IMMEDIATELY (POWER ON)
Cause: The fail-safe digital inputs/digital outputs (F-DI/F-DO) show a different state longer than that parameterized in p10002 / p10102.
Fault value (r0949, interpret bitwise binary):
yyyyxxxx bin
xxxx: Discrepancy error for fail-safe digital inputs (F-DI).
Bit 0: Discrepancy error for F-DI 0
Bit 1: Discrepancy error for F-DI 1
...
yyyy: Discrepancy error for fail-safe digital outputs (F-DO).
Bit 0: Discrepancy error for F-DO 0
...
Note:
If several discrepancy errors occur consecutively, then this fault is only signaled for the first error that occurs.
Remedy: - check the wiring of the F-DI (contact problems).
Note:
This message can be acknowledged via F-DI or PROFIsafe.
Discrepancy errors of an F-DI can only be completely acknowledged if safe acknowledgement was carried out once the cause of the error was resolved (p10006 or acknowledgment via PROFIsafe). As long as safety acknowledgement was not carried out, the corresponding F-DI stays in the safe state internally.
For cyclic switching operations at the F-DI, it may be necessary to adapt the discrepancy time to the switching frequency.

If the period of a cyclic switching pulse has the order of magnitude of double the value of p10002, then the following formulas must be checked.

p10002 < (tp / 2) - td (discrepancy time must be less than half the period minus the actual discrepancy time)

p10002 >= p9500 (discrepancy time must be no less than P9500)

p10002 > td (discrepancy time must be greater than the switch discrepancy time which may actually apply)

td = possible actual discrepancy time (in ms) that can occur with a switching operation. This must correspond to at least 1 SI sampling cycle (see p9500).

tp = period for a switching operation in ms.

When debounce p10017 is active, the discrepancy time is directly specified by the debounce time.

If the period of a cyclic switching pulse has the order of magnitude of twice the debounce time, then the following formulas should be checked.

p10002 < p10017 + 1 ms - td

p10002 > td

p10002 >= p9500

Example:

For a 12 ms SI sampling cycle and a switching frequency of 110 ms (p10017 = 0), the maximum discrepancy time which can be set is as follows:

p10002 <= (110/2 ms) - 12 ms = 43 ms

Rounded-off, p10002 <= 36 ms is obtained (since the discrepancy time can only be accepted as a whole SI sampling cycle, the value will need to be rounded up or down to a whole SI sampling time value if the result is not an exact multiple of an SI sampling cycle).

Note:

F-DI: Failsafe Digital Input

F-DO: Failsafe Digital Output

A01772 SI Motion CU: Test stop fail-safe digital output active

Message value: -

Drive object: SERVO_S110-CAN, SERVO_S110-DP, SERVO_S110-PN

Reaction: NONE

Acknowledge: NONE

Cause: The test stop for the fail-safe digital output (F-DO) is currently in progress.

Note:

F-DO: Failsafe Digital Output

Remedy: The alarm is automatically withdraw after successfully ending or canceling (when a fault condition occurs) the test stop.

F01773 SI Motion CU: Test stop error

Message value: %1

Drive object: SERVO_S110-CAN, SERVO_S110-DP, SERVO_S110-PN

Reaction: NONE

Acknowledge: IMMEDIATELY (POWER ON)

Cause: A fault has occurred on the CU side during the test stop for the fail-safe outputs.

Fault value (r0949, interpret hexadecimal):

RRRVWXYZ hex:

R: Reserved.

V: Actual state of the DO channel concerned (see X) on the CU (corresponds to the states read back from the hardware, bit 0 = DO 0, bit 1 = DO 1, etc.).

W: Required state of the DO channel concerned (see X, bit 0 = DO 0, bit 1 = DO 1, etc.).

X: DO channels involved, which indicate an error (bit 0 = DO 0, bit 1 = DO 1, etc.).

Y: Reason for the test stop fault.

Z: State of the test stop in which the fault has occurred.

Y: Reason for the test stop fault
Y = 1: MM side in incorrect test stop state (internal fault).
Y = 2: Expected states of the DOs were not fulfilled (CU305: readback via DI 22 / CU240 readback DI 2).
Y = 3: Incorrect timer state on CU side (internal fault)
Y = 4: Expected states of the diag DOs were not fulfilled (CU305: internal readback on MM channel).
Y = 5: Expected states of the second diag DOs were not fulfilled (CU305: internal readback on CU channel).
X and V indicate the DI or Diag-DO state dependent upon the reason for the fault (2, 4 or 5).
In the event of multiple test stop faults, the first one that occurred is shown.

Z: Test stop state and associated test actions
Z = 0 ... 3: Synchronization phase of test stop between CU and Motor Module no switching operations
Z = 4: DO + OFF and DO - OFF
Z = 5: Check to see if states are as expected
Z = 6: DO + ON and DO - ON
Z = 7: Check to see if states are as expected
Z = 8: DO + OFF and DO - ON
Z = 9: Check to see if states are as expected
Z = 10: DO + ON and DO - OFF
Z = 11: Check to see if states are as expected
Z = 12: DO + OFF and DO - OFF
Z = 13: Check to see if states are as expected
Z = 14: End of test stop

Diag expected states in table format:
Test stop state: Expectation Mode 1 / Mode 2 / Mode 3 / Mode 4
5: 0/-/-/1
7: 0/-/-/0
9: 0/-/-/0
11: 1/-/-/1
13: 0/-/-/1
Second diag expected states in table format:
Test stop state: Expectation Mode 1 / Mode 2 / Mode 3 / Mode 4
5: -/-/-/1
7: -/-/-/0
9: -/-/-/1
11: -/-/-/0
13: -/-/-/1
DI expected states in table format:
Test stop state: Expectation Mode 1 / Mode 2 / Mode 3 / Mode 4
5: -/1/1/-
7: -/0/0/-
9: -/0/1/-
11: -/0/1/-
13: -/1/1/-

Example:
Fault F01773 (CU) is signaled with fault value = 0001_0127 and fault F30773 (MM) is signaled with fault value 0000_0127.
This means that in state 7 (Z = 7) the state of the external readback signal was not set correctly (Y = 2) after DO-0 (X = 1) was switched to ON/ON.
Fault value 0001_0127 indicates that 0 was expected (W = 0) and 1 (V = 1) was read back from the hardware.
Fault value 0000_0127 on the MM indicates that the states were as expected.
In the case of fault F30773, W and V are always identical; a value of 0 always means that 0 was expected at the readback input but was not present on the other channel (CU).

Remedy: Check the wiring of the F-DOs and restart the test stop.
Note:
The fault is withdrawn if the test stop is successfully completed.
In the event of multiple test stop faults, the first one that occurred is shown.
Once the test stop has been restarted the next queued test stop fault will be signaled (if there is one).

A01774 SI Motion CU: Test stop necessary

Message value: -
Drive object: SERVO_S110-CAN, SERVO_S110-DP, SERVO_S110-PN
Reaction: NONE
Acknowledge: NONE
Cause: - after powering up the drive, a test stop has still not been carried out.
- a new test stop is required after commissioning.
- the time to carry out the forced checking procedure (test stop) has expired (p10003).
Remedy: Initiate test stop (BI: p10007).

A01796 (F, N) SI Motion CU: Wait for communication

Message value: -
Drive object: SERVO_S110-CAN, SERVO_S110-DP, SERVO_S110-PN
Reaction: NONE
Acknowledge: NONE
Cause: The drive waits for communication to be established with SINUMERIK or TM54F to execute the safety-relevant motion monitoring functions.
Note:
In this state, the pulses are safely suppressed.
Remedy: If, after a longer period of time, the message is not automatically withdrawn, the following checks have to be made as appropriate:
For communication with SINUMERIK, the following applies:
- check any other PROFIBUS messages/signals present and remove their cause.
- check that assignment of the axes on the higher-level control to the drives in the drive unit is correct.
- check enable signal of the safety-relevant motion monitoring functions for the corresponding axis on the higher-level control and if required, set it.
For communication with TM54F, the following applies:
- check any other messages/signals present for DRIVE-CLiQ communication with the TM54F and remove their cause.
- check the setting of p10010. All the drive objects controlled by the TM54F must be listed.
See also: p9601 (SI enable functions integrated in the drive (processor 1)), p9801 (SI enable functions integrated in the drive (processor 2))
Reaction upon F: NONE (OFF1, OFF2, OFF3)
Acknowl. upon F: IMMEDIATELY
Reaction upon N: NONE
Acknowl. upon N: NONE

C01798 SI Motion CU: Test stop running

Message value: -
Drive object: SERVO_S110-CAN, SERVO_S110-DP, SERVO_S110-PN
Reaction: NONE
Acknowledge: IMMEDIATELY (POWER ON)
Cause: The test stop is active.
Remedy: Not necessary.
The message is withdrawn when the test stop is finished.
Note:
SI: Safety Integrated

C01799 SI Motion CU: Acceptance test mode active

Message value: -

Drive object: SERVO_S110-CAN, SERVO_S110-DP, SERVO_S110-PN

Reaction: NONE

Acknowledge: IMMEDIATELY (POWER ON)

Cause: The acceptance test mode is active. The POWER ON signals of the safety-relevant motion monitoring functions can be acknowledged during the acceptance test using the RESET button of the higher-level control.

Remedy: Not necessary.

The message is withdrawn when exiting the acceptance test mode.

Note:

SI: Safety Integrated

F01800 DRIVE-CLiQ: Hardware/configuration error

Message value: %1

Drive object: All objects

Reaction: NONE (ENCODER, IASC/DCBRAKE, OFF1, OFF2, OFF3, STOP1, STOP2)

Acknowledge: IMMEDIATELY (POWER ON)

Cause: A DRIVE-CLiQ connection fault has occurred.

Fault value (r0949, interpret decimal):

100 ... 107:

Communication via DRIVE-CLiQ socket X100 ... X107 has not been switched to cyclic operation. The cause may be an incorrect structure or a configuration that results in an impossible bus timing.

10:

Loss of the DRIVE-CLiQ connection. The cause may be, for example, that the DRIVE-CLiQ cable was withdrawn from the Control Unit or as a result of a short-circuit for motors with DRIVE-CLiQ. This fault can only be acknowledged in cyclic communication.

11:

Repeated faults when detecting the connection. This fault can only be acknowledged in cyclic communication.

12:

A connection was detected but the node ID exchange mechanism does not function. The reason is probably that the component is defective. This fault can only be acknowledged in cyclic communication.

Remedy: Re fault value = 100 ... 107:

- ensure that the DRIVE-CLiQ components have the same firmware versions.
- avoid longer topologies for short current controller clock cycles.

For fault value = 10:

- check the DRIVE-CLiQ cables at the Control Unit.
- remove any short-circuit for motors with DRIVE-CLiQ.
- carry out a POWER ON.

For fault value = 11:

- check the electrical cabinet design and cable routing for EMC compliance

For fault value = 12:

- replace the component involved.

A01840 SMI: Component found without motor data

Message value: Component number: %1

Drive object: All objects

Reaction: NONE

Acknowledge: NONE

Cause: An SMI/DQI without motor data has been found (e.g. SMI installed as replacement part).

Alarm value (r2124, interpret decimal):

Component number from target topology.

Remedy: 1. Download the SMI/DQI data (motor/encoder data) from the data backup again (p4690, p4691).
2. Carry out a POWER ON (power off/on) for this component.
Note:
DQI: DRIVE-CLiQ Sensor Integrated
SMI: SINAMICS Sensor Module Integrated
See also: p4690 (SMI spare part component number), p4691 (SMI spare part save/download data)

A01900 (F) PB/PN: Configuration telegram error

Message value: %1
Drive object: All objects
Reaction: NONE
Acknowledge: NONE
Cause: A controller attempts to establish a connection using an incorrect configuring telegram.
Alarm value (r2124, interpret decimal):
1: Connection established to more drive objects than configured in the device. The drive objects for process data exchange and their sequence are defined in p0978.
2: Too many PZD data words for output or input to a drive object. The number of possible PZD items in a drive object is specified by the number of indices in r2050/p2051.
3: Uneven number of bytes for input or output.
4: Setting data for synchronization not accepted. For more information, see A01902.
223: Illegal clock synchronization for the PZD interface set in p8815[0].
253: PN Shared Device: illegal mixed configuration of PROFIsafe and PZD.
254: PN Shared Device: Illegal double assignment of a slot/subslot.
255: PN: Configured drive object and existing drive object do not match.
501: PROFIsafe parameter error (e.g. F_dest).
Remedy: Check the bus configuration on the master and slave sides.
Re alarm value = 1:
Check the list of the drive objects with process data exchange (p0978).
With p0978[x] = 0, all of the following drive objects in the list are excluded from the process data exchange.
Re alarm value = 2:
Check the number of data words for output and input to a drive object.
Re alarm value = 255:
Check the drive objects to be configured.
Re alarm value = 501:
Check the set PROFIsafe address (p9610).
Reaction upon F: NONE (OFF1)
Acknowl. upon F: IMMEDIATELY

A01902 PB/PN clock cycle synchronous operation parameterization not permissible

Message value: %1
Drive object: CU_S110-CAN, CU_S110-DP, CU_S110-PN
Reaction: NONE
Acknowledge: NONE
Cause: Parameterization for isochronous operation is not permissible.
Alarm value (r2124, interpret decimal):
0: Bus cycle time Tdp < 0.5 ms.
1: Bus cycle time Tdp > 32 ms.
2: Bus cycle time Tdp is not an integer multiple of the current controller sampling time.
3: Instant of the actual value sensing Ti > Bus cycle time Tdp or Ti = 0.
4: Instant of the actual value sensing Ti is not an integer multiple of the current controller sampling time.
5: Instant of the setpoint acceptance To >= Bus cycle time Tdp or To = 0.
6: Instant of the setpoint acceptance To is not an integer multiple of the current controller sampling time.
7: Master application cycle time Tmapc is not an integer multiple of the speed controller sampling time.
8: Bus reserve bus cycle time Tdp - data exchange time Tdx less than two current controller sampling times.
10: Instant of the setpoint acceptance To <= data exchange time Tdx + current controller sampling time
11: Master application cycle time Tmapc > 14 x Tdp or Tmapc = 0.

12: PLL tolerance window Tpll_w > Tpll_w_max.
16: Instant of the actual value sensing Ti is less than two current controller sampling times.

Remedy: - Adapt the bus parameterization Tdp, Ti, To.
Re alarm value = 10:
- Reduce Tdx by using fewer bus participants or shorter telegrams.
Note:
PB: PROFIBUS
PN: PROFINET

F01910 (N, A) Fieldbus: setpoint timeout

Message value: -
Drive object: All objects
Reaction: OFF3 (IASC/DCBRAKE, NONE, OFF1, OFF2, STOP1, STOP2)
Acknowledge: IMMEDIATELY
Cause: The reception of setpoints from the fieldbus interface (onboard, PROFIBUS/PROFINET/USS) has been interrupted.
- bus connection interrupted.
- controller switched off.
- controller set into the STOP state.
See also: p2047 (PROFIBUS additional monitoring time)
Remedy: Restore the bus connection and set the controller to RUN.
PROFIBUS slave redundancy:
For operation on a Y link, it must be ensured that "DP alarm mode = DPV1" is set in the slave parameterization.
See also: p2047 (PROFIBUS additional monitoring time)
Reaction upon N: NONE
Acknowl. upon N: NONE
Reaction upon A: NONE
Acknowl. upon A: NONE

F01911 (N, A) PB/PN clock cycle synchronous operation clock cycle failure

Message value: -
Drive object: All objects
Reaction: OFF1 (OFF3)
Acknowledge: IMMEDIATELY
Cause: The global control telegram to synchronize the clock cycles has failed - in cyclic operation - for several DP clock cycles or has violated the time grid specified in the parameterizing telegram over several consecutive DP clock cycles (refer to the bus cycle time, Tdp and Tpllw).
Remedy: - check the physical bus configuration (cable,connector, terminating resistor, shielding, etc.).
- check whether communication was briefly or permanently interrupted.
- check the bus and controller for utilization level (e.g. bus cycle time Tdp was set too short).
Note:
PB: PROFIBUS
PN: PROFINET
Reaction upon N: NONE
Acknowl. upon N: NONE
Reaction upon A: NONE
Acknowl. upon A: NONE

F01912 (N, A) PB/PN clock cycle synchronous operation sign-of-life failure

Message value: -
Drive object: All objects
Reaction: OFF1 (OFF3)
Acknowledge: IMMEDIATELY
Cause: The maximum permissible number of errors in the controller sign-of-life (clock synchronous operation) has been exceeded in cyclic operation.

Remedy: - physically check the bus (cables, connectors, terminating resistor, shielding, etc.).
- correct the interconnection of the controller sign-of-life (p2045).
- check whether the controller correctly sends the sign-of-life (e.g. create a trace with STW2.12 ... STW2.15 and trigger signal ZSW1.3).
- check the permissible telegram failure rate (p0925).
- check the bus and controller for utilization level (e.g. bus cycle time Tdp was set too short).
Note:
PB: PROFIBUS
PN: PROFINET

Reaction upon N: NONE
Acknowl. upon N: NONE
Reaction upon A: NONE
Acknowl. upon A: NONE

F01915 (N, A) PB/PN clock cycle synchronous operation sign-of-life failure drive object 1

Message value: -
Drive object: All objects
Reaction: NONE
Acknowledge: IMMEDIATELY
Cause: Group display for problems with the sign-of-life of the master (clock-cycle synchronous operation) on the drive object 1 (Control Unit).
For central measurements, synchronism with the central master is lost.
Remedy: Note:
PB: PROFIBUS
PN: PROFINET

Reaction upon N: NONE
Acknowl. upon N: NONE
Reaction upon A: NONE
Acknowl. upon A: NONE

A01920 (F) PROFIBUS: Interruption cyclic connection

Message value: -
Drive object: All objects
Reaction: NONE
Acknowledge: NONE
Cause: The cyclic connection to the PROFIBUS master is interrupted.
Remedy: Establish the PROFIBUS connection and activate the PROFIBUS master in the cyclic mode.
Reaction upon F: NONE (OFF1)
Acknowl. upon F: IMMEDIATELY

A01921 (F) PROFIBUS: Receive setpoints after To

Message value: -
Drive object: All objects
Reaction: NONE
Acknowledge: NONE
Cause: Output data of PROFIBUS master (setpoints) received at the incorrect instant in time within the PROFIBUS clock cycle.
Remedy: - check bus configuration.
- check parameters for clock cycle synchronization (ensure To > Tdx).
Note:
To: Time of setpoint acceptance
Tdx: Data exchange time

Reaction upon F: NONE (OFF1)
Acknowl. upon F: IMMEDIATELY

A01930 PB/PN current controller clock cycle clock cycle synch. not equal

Message value: %1
Drive object: All objects
Reaction: NONE
Acknowledge: NONE
Cause: The current controller clock cycle of all drives must be set the same for the clock cycle synchronous operation.
Alarm value (r2124, interpret decimal):
Number of the drive object with different current controller clock cycle.
Remedy: Set current controller clock cycles to identical values (p0115[0]).
Note:
PB: PROFIBUS
PN: PROFINET
See also: p0115 (Sampling times for internal control loops)

A01931 PB/PN speed controller clock cycle clock cycle synch. not equal

Message value: %1
Drive object: All objects
Reaction: NONE
Acknowledge: NONE
Cause: The speed controller clock cycle of all drives must be set the same for the clock cycle synchronous operation.
Alarm value (r2124, interpret decimal):
Number of the drive object with the different speed controller clock cycle.
Remedy: Set the speed controller clock cycles the same (p0115[1]).
Note:
PB: PROFIBUS
PN: PROFINET
See also: p0115 (Sampling times for internal control loops)

A01932 PB/PN clock cycle synchronization missing for DSC

Message value: -
Drive object: SERVO_S110-CAN, SERVO_S110-DP, SERVO_S110-PN
Reaction: NONE
Acknowledge: NONE
Cause: There is no clock synchronization or clock synchronous sign of life and DSC is selected.
Note:
DSC: Dynamic Servo Control
See also: p0922, p1190, p1191
Remedy: Set clock synchronization across the bus configuration and transfer clock synchronous sign-of-life.
See also: r2064 (PROFIdrive diagnostics clock synchronous mode)

A01940 PB/PN clock cycle synchronism not reached

Message value: -
Drive object: All objects
Reaction: NONE
Acknowledge: NONE
Cause: The bus is in the data exchange state and clock synchronous operation has been selected using the parameterizing telegram. It was not possible to synchronize to the clock cycle specified by the master.
- the master does not send a clock synchronous global control telegram although clock synchronous operation was selected when configuring the bus.
- the master is using another clock synchronous DP clock cycle than was transferred to the slave in the parameterizing telegram.
- at least one drive object has a pulse enable (not controlled from PROFIBUS/PROFINET either).

Remedy: - check the master application and bus configuration.
- check the consistency between the clock cycle input when configuring the slave and clock cycle setting at the master.
- check that no drive object has a pulse enable. Only enable the pulses after synchronizing the PROFIBUS/PROFINET drives.

Note:
PB: PROFIBUS
PN: PROFINET

A01941 PB/PN clock cycle signal missing when establishing bus communication

Message value: -
Drive object: All objects
Reaction: NONE
Acknowledge: NONE
Cause: The bus is in the data exchange state and clock synchronous operation has been selected using the parameterizing telegram. The global control telegram for synchronization is not being received.
Remedy: Check the master application and bus configuration.

Note:
PB: PROFIBUS
PN: PROFINET

A01943 PB/PN clock cycle signal error when establishing bus communication

Message value: -
Drive object: All objects
Reaction: NONE
Acknowledge: NONE
Cause: The bus is in the data exchange state and clock synchronous operation has been selected using the parameterizing telegram. The global control telegram for synchronization is being irregularly received.
-.the master is sending an irregular global control telegram.
- the master is using another clock synchronous DP clock cycle than was transferred to the slave in the parameterizing telegram.
Remedy: - check the master application and bus configuration.
- check the consistency between the clock cycle input when configuring the slave and clock cycle setting at the master.

Note:
PB: PROFIBUS
PN: PROFINET

A01944 PB/PN sign-of-life synchronism not reached

Message value: -
Drive object: All objects
Reaction: NONE
Acknowledge: NONE
Cause: The bus is in the data exchange state and clock synchronous operation has been selected using the parameterizing telegram. Synchronization with the master sign-of-life (STW2.12 ... STW2.15) could not be completed because the sign-of-life is changing differently to how it was configured in the Tmapc time grid.
Remedy: - ensure that the master correctly increments the sign-of-life in the master application clock cycle Tmapc.
- correct the interconnection of the master sign-of-life (p2045).

Note:
PB: PROFIBUS
PN: PROFINET

A01945 PROFIBUS: Connection to the Publisher failed

Message value: Fault cause: %1 bin
Drive object: All objects
Reaction: NONE
Acknowledge: NONE
Cause: For PROFIBUS peer-to-peer data transfer, the connection to at least one Publisher has failed.
Alarm value (r2124, interpret binary):
Bit 0 = 1: Publisher with address in r2077[0], connection failed.
...
Bit 15 = 1: Publisher with address in r2077[15], connection failed.
Remedy: - check the PROFIBUS cables.
- carry out a first commissioning of the Publisher that has the failed connection.
See also: r2077 (PROFIBUS diagnostics peer-to-peer data transfer addresses)

F01946 (A) PROFIBUS: Connection to the Publisher aborted

Message value: Fault cause: %1 bin
Drive object: All objects
Reaction: OFF1 (NONE, OFF2, OFF3)
Acknowledge: IMMEDIATELY (POWER ON)
Cause: At this drive object, the connection to at least one Publisher for PROFIBUS peer-to-peer data transfer in cyclic operation has been aborted.
Fault value (r0949, interpret binary):
Bit 0 = 1: Publisher with address in r2077[0], connection aborted.
...
Bit 15 = 1: Publisher with address in r2077[15], connection aborted.
Remedy: - check the PROFIBUS cables.
- check the state of the Publisher that has the aborted connection.
See also: r2077 (PROFIBUS diagnostics peer-to-peer data transfer addresses)
Reaction upon A: NONE
Acknowl. upon A: NONE

F01950 (N, A) PB/PN clock cycle synchronous operation synchronization unsuccessful

Message value: -
Drive object: All objects
Reaction: OFF1 (NONE)
Acknowledge: IMMEDIATELY (POWER ON)
Cause: Synchronization of the internal clock cycle to the global control telegram has failed. The internal clock cycle exhibits an unexpected shift.
Remedy: Only for internal Siemens troubleshooting.
Note:
PB: PROFIBUS
PN: PROFINET
Reaction upon N: NONE
Acknowl. upon N: NONE
Reaction upon A: NONE
Acknowl. upon A: NONE

A01990 (F) USS: PZD configuration error

Message value: %1
Drive object: All objects
Reaction: NONE
Acknowledge: NONE
Cause: The configuration of the process data (PZD) for the USS protocol is incorrect.
Alarm value (r2124, interpret decimal):
2: PZD amount (p2022) too great for the first drive object (p978[0]).
The number of possible PZD items in a drive object is determined by the number of indices in r2050/p2051.
Remedy: Re alarm value = 2:
Check the amount of USS PZD (p2022) and the maximum PZD amount (r2050/p2051) for the first drive object (p0978[0]).
Reaction upon F: NONE (OFF1)
Acknowl. upon F: IMMEDIATELY

A02000 Function generator: Start not possible

Message value: -
Drive object: All objects
Reaction: NONE
Acknowledge: NONE
Cause: The function generator has already been started.
Remedy: Stop the function generator and restart again if necessary.
Note:
The alarm is reset as follows:
- remove the cause of this alarm.
- restart the function generator.
See also: p4800 (Function generator control)

A02005 Function generator: Drive does not exist

Message value: %1
Drive object: All objects
Reaction: NONE
Acknowledge: NONE
Cause: The drive object specified for connection does not exist.
See also: p4815 (Function generator drive number)
Remedy: Use the existing drive object with the corresponding number.
Note:
The alarm is reset as follows:
- remove the cause of this alarm.
- restart the function generator.
See also: p4815 (Function generator drive number)

A02006 Function generator: No drive specified for connection

Message value: -
Drive object: All objects
Reaction: NONE
Acknowledge: NONE
Cause: No drive specified for connection in p4815.
See also: p4815 (Function generator drive number)
Remedy: At least one drive to be connected must be specified in p4815.
Note:
The alarm is reset as follows:
- remove the cause of this alarm.
- restart the function generator.
See also: p4815 (Function generator drive number)

A02007 Function generator: Drive not SERVO / VECTOR / DC_CTRL

Message value: %1
Drive object: All objects
Reaction: NONE
Acknowledge: NONE
Cause: The drive object specified for connection is not a SERVO / VECTOR or DC_CTRL.
See also: p4815 (Function generator drive number)
Remedy: Use a SERVO / VECTOR / DC_CTRL drive object with the corresponding number.
Note:
The alarm is reset as follows:
- remove the cause of this alarm.
- restart the function generator.

A02008 Function generator: Drive specified a multiple number of times

Message value: %1
Drive object: All objects
Reaction: NONE
Acknowledge: NONE
Cause: The drive object specified for connection is already specified.
Alarm value (r2124, interpret decimal):
Drive object number of the drive object that is specified a multiple number of times.
Remedy: Specify a different drive object.
Note:
The alarm is reset as follows:
- remove the cause of this alarm.
- restart the function generator.

A02009 Function generator: Illegal mode

Message value: %1
Drive object: All objects
Reaction: NONE
Acknowledge: NONE
Cause: The set operating mode (p1300) of the drive object is not permissible when using the function generator.
Alarm value (r2124, interpret decimal):
Number of the drive object involved.
Remedy: Change the operating mode for this drive object to p1300 = 20 (encoderless speed control) or p1300 = 21 (speed control with encoder).
Note:
The alarm is reset as follows:
- remove the cause of this alarm.
- restart the function generator.

A02010 Function generator: Speed setpoint from the drive is not zero

Message value: -
Drive object: All objects
Reaction: NONE
Acknowledge: NONE
Cause: The speed setpoint of a drive selected for connection is greater than the value for the standstill detection set using p1226.
Remedy: For all of the drives specified for connection, set the speed setpoints to zero.
Note:
The alarm is reset as follows:
- remove the cause of this alarm.
- restart the function generator.

A02011 Function generator: The actual drive speed is not zero

Message value: -
Drive object: All objects
Reaction: NONE
Acknowledge: NONE
Cause: The speed actual value of a drive selected for connection is greater than the value for the standstill detection set using p1226.
Remedy: Set the relevant drives to zero speed before starting the function generator.
Note:
The alarm is reset as follows:
- remove the cause of this alarm.
- restart the function generator.

A02015 Function generator: Drive enable signals missing

Message value: -
Drive object: All objects
Reaction: NONE
Acknowledge: NONE
Cause: The master control and/or enable signals are missing to connect to the specified drive.
See also: p4815 (Function generator drive number)
Remedy: Fetch the master control to the specified drive object and set all enable signals.
Note:
The alarm is reset as follows:
- remove the cause of this alarm.
- restart the function generator.

A02016 Function generator: Magnetizing running

Message value: %1
Drive object: All objects
Reaction: NONE
Acknowledge: NONE
Cause: Magnetizing has not yet been completed on a drive object specified for connection.
Alarm value (r2124, interpret decimal):
Number of the drive object involved.
See also: p4815 (Function generator drive number)
Remedy: Wait for magnetizing of the motor (r0056.4).
Note:
The alarm is reset as follows:
- restart the function generator.
See also: r0056 (Status word, closed-loop control)

A02020 Function generator: Parameter cannot be changed

Message value: -
Drive object: All objects
Reaction: NONE
Acknowledge: NONE
Cause: This parameter setting cannot be changed when the function generator is active (p4800 = 1).
See also: p4810, p4812, p4813, p4815, p4820, p4821, p4822, p4823, p4824, p4825, p4826, p4827, p4828, p4829
Remedy: - stop the function generator before parameterizing (p4800 = 0).
- if required, start the function generator (p4800 = 1).
Note:
The alarm is reset as follows:
- remove the cause of this alarm.
- restart the function generator.
See also: p4800 (Function generator control)

A02025 Function generator: Period too short

Message value: -
Drive object: All objects
Reaction: NONE
Acknowledge: NONE
Cause: The value for the period is too short.
See also: p4821 (Function generator period)
Remedy: Check and adapt the value for the period.
Note:
The alarm is reset as follows:
- remove the cause of this alarm.
- restart the function generator.
See also: p4821 (Function generator period)

A02026 Function generator: Pulse width too high

Message value: -
Drive object: All objects
Reaction: NONE
Acknowledge: NONE
Cause: The selected pulse width is too high.
The pulse width must be less than the period duration.
See also: p4822 (Function generator pulse width)
Remedy: Reduce pulse width.
Note:
The alarm is reset as follows:
- remove the cause of this alarm.
- restart the function generator.
See also: p4821 (Function generator period), p4822 (Function generator pulse width)

A02030 Function generator: Physical address equals zero

Message value: -
Drive object: All objects
Reaction: NONE
Acknowledge: NONE
Cause: The specified physical address is zero.
See also: p4812 (Function generator physical address)
Remedy: Set a physical address with a value other than zero.
Note:
The alarm is reset as follows:
- remove the cause of this alarm.
- restart the function generator.
See also: p4812 (Function generator physical address)

A02040 Function generator: Illegal value for offset

Message value: -
Drive object: All objects
Reaction: NONE
Acknowledge: NONE
Cause: The value for the offset is higher than the value for the upper limit or lower than the value for the lower limit.
See also: p4826 (Function generator offset)

Remedy: Adjust the offset value accordingly.
Note:
The alarm is reset as follows:
- remove the cause of this alarm.
- restart the function generator.
See also: p4826 (Function generator offset), p4828 (Function generator lower limit), p4829 (Function generator upper limit)

A02041 Function generator: Illegal value for bandwidth

Message value: -
Drive object: All objects
Reaction: NONE
Acknowledge: NONE
Cause: The bandwidth referred to the time slice clock cycle of the function generator has either been set too low or too high.
Depending on the time slice clock cycle, the bandwidth is defined as follows:
Bandwidth_max = 1 / (2 x time slice clock cycle)
Bandwidth_min = Bandwidth_max / 100000
Example:
Assumption: p4830 = 125 µs
--> Bandwidth_max = 1 / (2 x 125 µs) = 4000 Hz
--> Bandwidth_min = 4000 Hz / 100000 = 0.04 Hz
Note:
p4823: Function generator bandwidth
p4830: Function generator time slice clock cycle
See also: p4823 (Function generator bandwidth), p4830 (Function generator time slice cycle)
Remedy: Check the value for the bandwidth and adapt accordingly.
Note:
The alarm is reset as follows:
- remove the cause of this alarm.
- restart the function generator.

A02047 Function generator: Time slice clock cycle invalid

Message value: -
Drive object: All objects
Reaction: NONE
Acknowledge: NONE
Cause: The time slice clock cycle selected does not match any of the existing time slices.
See also: p4830 (Function generator time slice cycle)
Remedy: Enter an existing time slice clock cycle. The existing time slices can be read out via p7901.
Note:
The alarm is reset as follows:
- remove the cause of this alarm.
- restart the function generator.
See also: r7901 (Sampling times)

A02050 Trace: Start not possible

Message value: -
Drive object: All objects
Reaction: NONE
Acknowledge: NONE
Cause: The trace has already been started.
See also: p4700 (Trace control)
Remedy: Stop the trace and, if necessary, start again.

A02055 Trace: Recording time too short

Message value: -
Drive object: All objects
Reaction: NONE
Acknowledge: NONE
Cause: The trace duration is too short.
The minimum is twice the value of the trace clock cycle.
See also: p4721 (Trace recording time)
Remedy: Check the selected recording time and, if necessary, adjust.

A02056 Trace: Recording cycle too short

Message value: -
Drive object: All objects
Reaction: NONE
Acknowledge: NONE
Cause: The selected recording cycle is shorter than the selected basic clock cycle 0 (p0110[0]).
See also: p4720 (Trace recording cycle)
Remedy: Increase the value for the trace cycle.

A02057 Trace: Time slice clock cycle invalid

Message value: -
Drive object: All objects
Reaction: NONE
Acknowledge: NONE
Cause: The time slice clock cycle selected does not match any of the existing time slices.
See also: p4723 (Trace time slice cycle)
Remedy: Enter an existing time slice clock cycle. The existing time slices can be read out via p7901.
See also: r7901 (Sampling times)

A02058 Trace: Time slice clock cycle for endless trace not valid

Message value: -
Drive object: All objects
Reaction: NONE
Acknowledge: NONE
Cause: The selected time slice clock cycle cannot be used for the endless trace
See also: p4723 (Trace time slice cycle)
Remedy: Enter the clock cycle of an existing time slice with a cycle time >= 2 ms for up to 4 recording channels or >= 4 ms from 5 recording channels per trace.
The existing time slices can be read out via p7901.
See also: r7901 (Sampling times)

A02059 Trace: Time slice clock cycle for 2 x 8 recording channels not valid

Message value: -
Drive object: All objects
Reaction: NONE
Acknowledge: NONE
Cause: The selected time slice clock cycle cannot be used for more than 4 recording channels.
See also: p4723 (Trace time slice cycle)
Remedy: Enter the clock cycle of an existing time slice with a cycle time >= 4 ms or reduce the number of recording channels to 4 per trace.
The existing time slices can be read out via p7901.
See also: r7901 (Sampling times)

A02060 Trace: Signal to be traced missing

Message value: -
Drive object: All objects
Reaction: NONE
Acknowledge: NONE
Cause: - a signal to be traced was not specified.
- the specified signals are not valid.
See also: p4730 (Trace record signal 0), p4731 (Trace record signal 1), p4732 (Trace record signal 2), p4733 (Trace record signal 3)
Remedy: - specify the signal to be traced.
- check whether the relevant signal can be traced.

A02061 Trace: Invalid signal

Message value: -
Drive object: All objects
Reaction: NONE
Acknowledge: NONE
Cause: - the specified signal does not exist.
- the specified signal can no longer be traced (recorded).
See also: p4730 (Trace record signal 0), p4731 (Trace record signal 1), p4732 (Trace record signal 2), p4733 (Trace record signal 3)
Remedy: - specify the signal to be traced.
- check whether the relevant signal can be traced.

A02062 Trace: Invalid trigger signal

Message value: -
Drive object: All objects
Reaction: NONE
Acknowledge: NONE
Cause: - a trigger signal was not specified.
- the specified signal does not exist.
- the specified signal is not a fixed-point signal.
- the specified signal cannot be used as a trigger signal for the trace.
See also: p4711 (Trace trigger signal)
Remedy: Specify a valid trigger signal.

A02063 Trace: Invalid data type

Message value: %1
Drive object: All objects
Reaction: NONE
Acknowledge: NONE
Cause: The specified data type to select a signal using a physical address is invalid.
See also: p4711 (Trace trigger signal), p4730 (Trace record signal 0), p4731 (Trace record signal 1), p4732 (Trace record signal 2), p4733 (Trace record signal 3)
Remedy: Use a valid data type.

A02070 Trace: Parameter cannot be changed

Message value: -
Drive object: All objects
Reaction: NONE
Acknowledge: NONE
Cause: The trace parameter settings cannot be changed when the trace is active.
See also: p4700, p4710, p4711, p4712, p4713, p4714, p4715, p4716, p4720, p4721, p4722, p4730, p4731, p4732, p4733, p4780, p4781, p4782, p4783, p4789, p4795
Remedy: - stop the trace before parameterization.
- if required, start the trace.

A02075 Trace: Pretrigger time too long

Message value: -
Drive object: All objects
Reaction: NONE
Acknowledge: NONE
Cause: The selected pretrigger time must be shorter than the trace time.
See also: p4721 (Trace recording time), p4722 (Trace trigger delay)
Remedy: Check the pretrigger time setting and change if necessary.

F02080 Trace: Parameterization deleted due to unit changeover

Message value: -
Drive object: All objects
Reaction: NONE
Acknowledge: IMMEDIATELY
Cause: The trace parameterization in the drive unit was deleted due to a unit changeover or a change in the reference parameters.
Remedy: Restart trace.

A02099 Trace: Insufficient Control Unit memory

Message value: -
Drive object: All objects
Reaction: NONE
Acknowledge: NONE
Cause: The memory space still available on the Control Unit is no longer sufficient for the trace function.
Remedy: Reduce the memory required, e.g. as follows:
- reduce the trace time.
- increase the trace clock cycle.
- reduce the number of signals to be traced.
See also: r4708 (Trace memory space required), r4799 (Trace memory location free)

A02100 Drive: Computing dead time current controller too short

Message value: %1
Drive object: SERVO_S110-CAN, SERVO_S110-DP, SERVO_S110-PN
Reaction: NONE
Acknowledge: NONE
Cause: The value in p0118 produces a dead time of one clock cycle because it is prior to setpoint availability.
Possible causes:
- A parameter backup with a version higher than 4.3 was loaded to a version less than or equal to 4.3.
- The system properties after replacing a component no longer match the parameter assignment.
Alarm value (r2134, floating point):
The minimum value for p0118 where a dead time no longer occurs.
Remedy:
- set p0118 to zero.
- set p0118 to a value greater than or equal to the alarm value (for p1810.11 = 1)
- set p0117 to an automatic setting (p0117 = 1).
- check the firmware versions of the components involved.

A02150 OA: Application cannot be loaded

Message value: %1
Drive object: All objects
Reaction: NONE
Acknowledge: NONE
Cause: The system was not able to load an OA application.
Alarm value (r2124, interpret hexadecimal):
Only for internal Siemens troubleshooting.

Remedy: - carry out a POWER ON (power off/on) for all components.
- upgrade firmware to later version.
- contact the Hotline.
Note:
OA: Open Architecture

F02151 (A) OA: Internal software error

Message value: %1
Drive object: All objects
Reaction: OFF2 (NONE, OFF1, OFF3)
Acknowledge: IMMEDIATELY (POWER ON)
Cause: An internal software error has occurred within an OA application.
Fault value (r0949, interpret hexadecimal):
Only for internal Siemens troubleshooting.
Remedy: - carry out a POWER ON (power off/on) for all components.
- upgrade firmware to later version.
- contact the Hotline.
- replace the Control Unit.
Note:
OA: Open Architecture
Reaction upon A: NONE
Acknowl. upon A: NONE

F02152 (A) OA: Insufficient memory

Message value: %1
Drive object: All objects
Reaction: OFF1
Acknowledge: IMMEDIATELY (POWER ON)
Cause: Too many functions have been configured on this Control Unit (e.g. too many drives, function modules, data sets, OA applications, blocks, etc).
Fault value (r0949, interpret decimal):
Only for internal Siemens troubleshooting.
Remedy: - change the configuration on this Control Unit (e.g. fewer drives, function modules, data sets, OA applications, blocks, etc).
- use an additional Control Unit.
Note:
OA: Open Architecture
Reaction upon A: NONE
Acknowl. upon A: NONE

F03000 NVRAM fault on action

Message value: %1
Drive object: CU_S110-CAN, CU_S110-DP, CU_S110-PN
Reaction: NONE
Acknowledge: IMMEDIATELY
Cause: A fault occurred during execution of action p7770 = 1, 2 for the NVRAM data.
Fault value (r0949, interpret hexadecimal):
yyxx hex: yy = fault cause, xx = application ID
yy = 1:
The action p7770 = 1 is not supported by this version if Drive Control Chart (DCC) is activated for the drive object concerned.
yy = 2:
The data length of the specified application is not the same in the NVRAM and the backup.
yy = 3:
The data checksum in p7774 is not correct.

yy = 4:
No data available to load.

Remedy: Perform the remedy according to the results of the troubleshooting.
If necessary, start the action again.

F03001 NVRAM checksum incorrect

Message value: %1
Drive object: All objects
Reaction: NONE
Acknowledge: IMMEDIATELY
Cause: A checksum error occurred when evaluating the non-volatile data (NVRAM) on the Control Unit.
The NVRAM data affected was deleted.
Remedy: Carry out a POWER ON (power off/on) for all components.

A03507 (F, N) Digital output not set

Message value: %1
Drive object: All objects
Reaction: NONE
Acknowledge: NONE
Cause: Despite specification by the signal source the digital output has not been set.
Possible causes:
- power supply missing.
- the digital output is in current limiting (e.g. due to short-circuit).
- The digital output is being used for Safety Extended Functions.
- The control has authority to access the digital output by means of direct access (see also r0729).

Alarm value (r2124, interpret bitwise binary):
Digital output involved (structured the same as r0747).
Remedy:
- check the 24 V power supply (e.g. X131.7 for CU305 (ground is X131.8)).
- check the output terminals for short-circuits.
- reset the signal source of the digital output for use by Safety Extended functions.
- carry out a POWER ON (power off/on).

Reaction upon F: NONE
Acknowl. upon F: IMMEDIATELY (POWER ON)
Reaction upon N: NONE
Acknowl. upon N: NONE

A03510 (F, N) CU: Calibration data not plausible

Message value: %1
Drive object: CU_S110-CAN, CU_S110-DP, CU_S110-PN
Reaction: NONE
Acknowledge: NONE
Cause: During booting, the calibration data for the analog inputs is read and checked with respect to plausibility.
At least one calibration data point was determined to be invalid.
Remedy:
- power down/power up the power supply for the Control Unit.
- check the DRIVE-CLiQ wiring.

If it reoccurs, replace the module.
In principle, operation could continue.
The analog channel involved possibly does not achieve the specified accuracy.

Reaction upon F: NONE
Acknowl. upon F: IMMEDIATELY (POWER ON)
Reaction upon N: NONE
Acknowl. upon N: NONE

A03510 (F, N) TM: Calibration data not plausible

Message value: %1
Drive object: SERVO_S110-CAN, SERVO_S110-DP, SERVO_S110-PN
Reaction: NONE
Acknowledge: NONE
Cause: During ramp-up, the Terminal Module 31 (TM31) calibration data is read in and checked for plausibility.
At least one calibration data point was determined to be invalid.
Alarm value (r2124, interpret binary):
Bit 1: 10 V value, analog input 0 invalid.
Bit 3: 10 V value, analog input 1 invalid.
Bit 4: Offset, analog output 0 invalid.
Bit 5: 10 V value, analog output 0 invalid.
Bit 6: Offset, analog output 1 invalid.
Bit 7: 10 V value, analog input 1 invalid.
Remedy: - power down/power up the power supply for the Control Unit.
- check the DRIVE-CLiQ wiring.
If it reoccurs, replace the module.
In principle, operation could continue.
The analog channel involved possibly does not achieve the specified accuracy.
Reaction upon F: NONE (OFF1, OFF2)
Acknowl. upon F: IMMEDIATELY (POWER ON)
Reaction upon N: NONE
Acknowl. upon N: NONE

A05000 (N) Power unit: Overtemperature heat sink AC inverter

Message value: -
Drive object: SERVO_S110-CAN, SERVO_S110-DP, SERVO_S110-PN
Reaction: NONE
Acknowledge: NONE
Cause: The alarm threshold for overtemperature at the inverter heat sink has been reached. The response is set using p0290.
If the temperature of the heat sink increases by an additional 5 K, then fault F30004 is initiated.
Remedy: Check the following:
- is the ambient temperature within the defined limit values?
- have the load conditions and the load duty cycle been appropriately dimensioned?
- has the cooling failed?
Reaction upon N: NONE
Acknowl. upon N: NONE

A05001 (N) Power unit: Overtemperature depletion layer chip

Message value: -
Drive object: SERVO_S110-CAN, SERVO_S110-DP, SERVO_S110-PN
Reaction: NONE
Acknowledge: NONE
Cause: Alarm threshold for overtemperature of the power semiconductor in the AC converter has been reached.
Note:
- The response is set using p0290.
- If the depletion layer temperature increases by an additional 15 K, then fault F30025 is triggered.
Remedy: Check the following:
- is the ambient temperature within the defined limit values?
- have the load conditions and the load duty cycle been appropriately dimensioned?
- has the cooling failed?
- pulse frequency too high?
See also: r0037, p0290 (Power unit overload response)

Reaction upon N: NONE
Acknowl. upon N: NONE

A05002 (N) Power unit: Air intake overtemperature

Message value: -
Drive object: SERVO_S110-CAN, SERVO_S110-DP, SERVO_S110-PN
Reaction: NONE
Acknowledge: NONE
Cause: The alarm threshold for the air intake overtemperature has been reached. For air-cooled power units, the threshold is 42 °C (hysteresis 2 K). The response is set using p0290.
If the air intake temperature increases by an additional 13 K, then fault F30035 is output.
Remedy: Check the following:
- is the ambient temperature within the defined limit values?
- has the fan failed? Check the direction of rotation.

Reaction upon N: NONE
Acknowl. upon N: NONE

A05003 (N) Power unit: Internal overtemperature

Message value: -
Drive object: SERVO_S110-CAN, SERVO_S110-DP, SERVO_S110-PN
Reaction: NONE
Acknowledge: NONE
Cause: The alarm threshold for internal overtemperature has been reached.
If the temperature inside the power unit increases by an additional 5 K, then fault F30036 is triggered.
Remedy: Check the following:
- is the ambient temperature within the defined limit values?
- has the fan failed? Check the direction of rotation.

Reaction upon N: NONE
Acknowl. upon N: NONE

A05004 (N) Power unit: Rectifier overtemperature

Message value: -
Drive object: SERVO_S110-CAN, SERVO_S110-DP, SERVO_S110-PN
Reaction: NONE
Acknowledge: NONE
Cause: The alarm threshold for the overtemperature of the rectifier has been reached. The response is set using p0290.
If the temperature of the rectifier increases by an additional 5 K, then fault F30037 is triggered.
Remedy: Check the following:
- is the ambient temperature within the defined limit values?
- have the load conditions and the load duty cycle been appropriately dimensioned?
- has the fan failed? Check the direction of rotation.
- has a phase of the line supply failed?
- is an arm of the supply (incoming) rectifier defective?

Reaction upon N: NONE
Acknowl. upon N: NONE

A05006 (N) Power unit: Overtemperature thermal model

Message value: -
Drive object: SERVO_S110-CAN, SERVO_S110-DP, SERVO_S110-PN
Reaction: NONE
Acknowledge: NONE
Cause: The temperature difference between the chip and heat sink has exceeded the permissible limit value (blocksize power units only).
Depending on p0290, an appropriate overload response is initiated.
See also: r0037

Remedy: Not necessary.
The alarm disappears automatically once the limit value is undershot.
Note:
If the alarm does not disappear automatically and the temperature continues to rise, this can result in fault F30024.
See also: p0290 (Power unit overload response)
Reaction upon N: NONE
Acknowl. upon N: NONE

N05007 (A) Power unit: Overtemperature thermal model (chassis PU)

Message value: -
Drive object: SERVO_S110-CAN, SERVO_S110-DP, SERVO_S110-PN
Reaction: NONE
Acknowledge: NONE
Cause: The temperature difference between the chip and heat sink has exceeded the permissible limit value (r0293) (chassis power units only).
Depending on p0290, an appropriate overload response is initiated.
See also: r0037
Remedy: Not necessary.
The alarm disappears automatically once the limit value is undershot.
See also: p0290 (Power unit overload response)
Reaction upon A: NONE
Acknowl. upon A: NONE

F06310 (A) Supply voltage (p0210) incorrectly parameterized

Message value: -
Drive object: SERVO_S110-CAN, SERVO_S110-DP, SERVO_S110-PN
Reaction: NONE (OFF1, OFF2)
Acknowledge: IMMEDIATELY (POWER ON)
Cause: For AC/AC drive units, the measured DC voltage lies outside the tolerance range after pre-charging has been completed. The following applies for the tolerance range: 1.16 * p0210 < r0070 < 1.6 * p0210.
The fault can only be acknowledged when the drive is powered down.
See also: p0210 (Drive unit line supply voltage)
Remedy: - check the parameterized supply voltage and if required change (p0210).
- check the line supply voltage.
See also: p0210 (Drive unit line supply voltage)
Reaction upon A: NONE
Acknowl. upon A: NONE

F07011 Drive: Motor overtemperature

Message value: %1
Drive object: SERVO_S110-CAN, SERVO_S110-DP, SERVO_S110-PN
Reaction: OFF2 (NONE, OFF1, OFF3, STOP1, STOP2)
Acknowledge: IMMEDIATELY
Cause: KTY:
The motor temperature has exceeded the fault threshold (p0605) or the timer (p0606) after the alarm threshold was exceeded (p0604) has expired.
PTC, bimetallic NC contact:
The response threshold of 1650 ohms was exceeded (in SME p4600..p4603 or in TM120 p4610..p4613 = 10 or 30), or the timer (p0606) has expired after 1650 ohms was exceeded (in SME p4600..p4603 or in TM120 p4610..p4613 = 12 or 32).
Possible causes:
- Motor is overloaded
- motor ambient temperature too high.
- PTC / bimetallic NC contact: Wire breakage or sensor not connected.

Fault value (r0949, interpret decimal):
200: The I2t motor model signals an overtemperature (p0612.0 = 1, p0611 > 0).
Number of the temperature channel leading to the message (for SME/TM120 (p0601 = 10, 11)).
See also: p0604 (Motor temperature alarm threshold), p0605 (Motor temperature fault threshold), p0606 (Motor temperature timer)

Remedy: - Reduce the motor load.
- check the ambient temperature and the motor ventilation.
- check the wiring and the connection of the PTC or bimetallic NC contact.
See also: p0604 (Motor temperature alarm threshold), p0605 (Motor temperature fault threshold), p0606 (Motor temperature timer)

A07012 (N) Drive: I2t motor model overtemperature

Message value: %1
Drive object: SERVO_S110-CAN, SERVO_S110-DP, SERVO_S110-PN
Reaction: NONE
Acknowledge: NONE
Cause: The thermal I2t motor model (for synchronous motors) identified that the temperature alarm threshold was exceeded.
See also: r0034 (Motor utilization), p0605 (Motor temperature fault threshold), p0611 (I2t motor model thermal time constant)
Remedy: - check the motor load and if required, reduce.
- check the motor ambient temperature.
- check the thermal time constant p0611.
- check the overtemperature fault threshold p0605 (= alarm threshold for the I2t motor model, see p0612)
Reaction upon N: NONE
Acknowl. upon N: NONE

A07015 Drive: Motor temperature sensor alarm

Message value: %1
Drive object: SERVO_S110-CAN, SERVO_S110-DP, SERVO_S110-PN
Reaction: NONE
Acknowledge: NONE
Cause: An error was detected when evaluating the temperature sensor set in p0600 and p0601.
With the fault, the time in p0607 is started. If the fault is still present after this time has expired, then fault F07016 is output; however, at the earliest, 50 ms after alarm A07015.
Possible causes:
- wire breakage or sensor not connected (KTY: R > 1630 Ohm).
- measured resistance too low (PTC: R < 20 Ohm, KTY: R < 50 Ohm).
Alarm value (r2124, interpret decimal):
- if SME/TM120 is selected (p0601 = 10, 11),
this is the number of the temperature channel leading to the message.
Remedy: - make sure that the sensor is connected correctly.
- check the parameterization (p0600, p0601).
See also: r0035 (Motor temperature), p0600 (Motor temperature sensor for monitoring), p0601 (Motor temperature sensor type), p0607 (Temperature sensor fault timer)

F07016 Drive: Motor temperature sensor fault

Message value: %1
Drive object: SERVO_S110-CAN, SERVO_S110-DP, SERVO_S110-PN
Reaction: OFF1 (NONE, OFF2, OFF3, STOP1, STOP2)
Acknowledge: IMMEDIATELY
Cause: An error was detected when evaluating the temperature sensor set in p0600 and p0601.
Possible causes:
- wire breakage or sensor not connected (KTY: R > 1630 Ohm).
- measured resistance too low (PTC: R < 20 Ohm, KTY: R < 50 Ohm).

Note:
If alarm A07015 is present, the time in p0607 is started. If the fault is still present after this time has expired, then fault F07016 is output; however, at the earliest, 50 ms after alarm A07015.
Fault value (r0949, interpret decimal):
- if SME/TM120 is selected (p0601 = 10, 11),
this is the number of the temperature channel leading to the message.
See also: p0607 (Temperature sensor fault timer)

Remedy:
- make sure that the sensor is connected correctly.
- check the parameterization (p0600, p0601).
- induction motors: De-activate temperature sensor fault (p0607 = 0).
See also: r0035 (Motor temperature), p0600 (Motor temperature sensor for monitoring), p0601 (Motor temperature sensor type), p0607 (Temperature sensor fault timer)

F07080 Drive: Incorrect control parameter

Message value: Parameter: %1
Drive object: All objects
Reaction: NONE
Acknowledge: IMMEDIATELY (POWER ON)
Cause: The closed-loop control parameters have been parameterized incorrectly (e.g. p0356 = L_spread = 0).
Fault value (r0949, interpret decimal):
The fault value includes the parameter number involved.
See also: p0310, p0311, p0341, p0344, p0350, p0354, p0356, p0358, p0360, p0400, p0404, p0408, p0640, p1082, p1300
Remedy: Modify the parameter indicated in the fault value (r0949) (e.g. p0640 = current limit > 0).
See also: p0311, p0341, p0344, p0350, p0354, p0356, p0358, p0360, p0400, p0404, p0408, p0640, p1082

F07082 Macro: Execution not possible

Message value: Fault cause: %1, supplementary information: %2, preliminary parameter number: %3
Drive object: All objects
Reaction: NONE
Acknowledge: IMMEDIATELY
Cause: The macro cannot be executed.
Fault value (r0949, interpret hexadecimal):
ccccbbaa hex:
cccc = preliminary parameter number, bb = supplementary information, aa = fault cause
Fault causes for the trigger parameter itself:
19: Called file is not valid for the trigger parameter.
20: Called file is not valid for parameter 15.
21: Called file is not valid for parameter 700.
22: Called file is not valid for parameter 1000.
23: Called file is not valid for parameter 1500.
24: Data type of a TAG is incorrect (e.g. Index, number or bit is not U16).
Fault causes for the parameters to be set:
25: Error level has an undefined value.
26: Mode has an undefined value.
27: A value was entered as string in the tag value that is not "DEFAULT".
31: Entered drive object type unknown.
32: A device was not able to be found for the determined drive object number.
34: A trigger parameter was recursively called.
35: It is not permissible to write to the parameter via macro.
36: Check, writing to a parameter unsuccessful, parameter can only be read, not available, incorrect data type, value range or assignment incorrect.
37: Source parameter for a BICO interconnection was not able to be determined.
38: An index was set for a non-indexed (or CDS-dependent) parameter.
39: No index was set for an indexed parameter.
41: A bit operation is only permissible for parameters with the parameter format DISPLAY_BIN.

42: A value not equal to 0 or 1 was set for a BitOperation.
43: Reading the parameter to be changed by the BitOperation was unsuccessful.
51: Factory setting for DEVICE may only be executed on the DEVICE.
61: The setting of a value was unsuccessful.

Remedy: - check the parameter involved.
- check the macro file and BICO interconnection.
See also: p0015

F07083 Macro: ACX file not found

Message value: Parameter: %1
Drive object: All objects
Reaction: NONE
Acknowledge: IMMEDIATELY
Cause: The ACX file (macro) to be executed was not able to be found in the appropriate directory.
Fault value (r0949, interpret decimal):
Parameter number with which the execution was started.
See also: p0015
Remedy: - check whether the file is saved in the appropriate directory on the memory card.
Example:
If p0015 is set to 1501, then the selected ACX file must be located in the following directory:
... /PMACROS/DEVICE/P15/PM001501.ACX

F07084 Macro: Condition for WaitUntil not fulfilled

Message value: Parameter: %1
Drive object: All objects
Reaction: NONE
Acknowledge: IMMEDIATELY
Cause: The WaitUntil condition set in the macro was not fulfilled in a certain number of attempts.
Fault value (r0949, interpret decimal):
Parameter number for which the condition was set.
Remedy: Check and correct the conditions for the WaitUntil loop.

F07085 Drive: Open-loop/closed-loop control parameters changed

Message value: Parameter: %1
Drive object: SERVO_S110-CAN, SERVO_S110-DP, SERVO_S110-PN
Reaction: NONE
Acknowledge: IMMEDIATELY (POWER ON)
Cause: Open-loop/closed-loop control parameters have had to be changed for the following reasons:
1. As a result of other parameters, they have exceeded the dynamic limits.
2. They cannot be used due to the fact that the hardware detected not having certain features.
Fault value (r0949, interpret decimal):
Changed parameter number.
See also: p0640 (Current limit), p1082 (Maximum speed), p1300 (Open-loop/closed-loop control operating mode), p1800 (Pulse frequency setpoint)
Remedy: Not necessary.
It is not necessary to change the parameters as they have already been correctly limited.

F07086 Units changeover: Parameter limit violation due to reference value change

Message value: Parameter: %1
Drive object: SERVO_S110-CAN, SERVO_S110-DP, SERVO_S110-PN
Reaction: NONE
Acknowledge: IMMEDIATELY
Cause: A reference parameter was changed in the system. This resulted in the fact that for the parameters involved, the selected value was not able to be written in the per unit representation (cause: e.g. the steady-state minimum/maximum limit or that defined in the application was violated). The values of the parameters were set to the corresponding violated minimum/maximum limit or to the factory setting.

Fault value (r0949, parameter):
Diagnostics parameter r9450 to display the parameters that were not able to be re-calculated.
See also: p0304, p0305, p0310, p0596, p2000, p2001, p2002, p2003, r2004

Remedy: Check the adapted parameter value and if required correct.
See also: r9450 (Reference value change parameter with unsuccessful calculation)

F07087 Drive: Encoderless operation not possible for the selected pulse frequency

Message value: Parameter: %1
Drive object: SERVO_S110-CAN, SERVO_S110-DP, SERVO_S110-PN
Reaction: NONE
Acknowledge: IMMEDIATELY
Cause: Encoderless operation is not possible for the selected pulse frequency (p1800).
Encoderless operation is activated under the following conditions:
- the changeover speed for encoderless operation (p1404) is less than the maximum speed (p0322).
- a control type with encoderless operation has been selected (p1300).
- encoder faults of the motor encoder result in a fault response with encoderless operation (p0491).
See also: p0491 (Motor encoder fault response ENCODER), p1300 (Open-loop/closed-loop control operating mode), p1404 (Encoderless operation changeover speed), p1800 (Pulse frequency setpoint)

Remedy: Increase the pulse frequency (p1800).
Note:
In encoderless operation, the pulse frequency must be at least as high as half the current controller clock cycle (1/p0115[0]).

F07088 Units changeover: Parameter limit violation due to units changeover

Message value: Parameter: %1
Drive object: SERVO_S110-CAN, SERVO_S110-DP, SERVO_S110-PN
Reaction: NONE
Acknowledge: IMMEDIATELY
Cause: A changeover of units was initiated.
Possible causes for the violation of a parameter limit are:
- when rounding off a parameter corresponding to its decimal places, the steady-state minimum or maximum limit was violated.
- inaccuracies for the data type "FloatingPoint".
In these cases, when the minimum limit is violated then the parameter value is rounded up and when the maximum limited is violated the parameter value is rounded down.
Fault value (r0949, interpret decimal):
Diagnostics parameter r9451 to display all parameters whose value had to be adapted.
See also: p0100 (IEC/NEMA mot stds), p0349 (System of units motor equivalent circuit diagram data), p0505 (Selecting the system of units), p0595 (Selecting technological units)

Remedy: Check the adapted parameter values and if required correct.
See also: r9451 (Units changeover adapted parameters)

A07089 Changing over units: Function module activation is blocked because the units have been changed over

Message value: -
Drive object: All objects
Reaction: NONE
Acknowledge: NONE
Cause: An attempt was made to activate a function module. This is not permissible if the units have already been changed over.
See also: p0100 (IEC/NEMA mot stds), p0349 (System of units motor equivalent circuit diagram data), p0505 (Selecting the system of units)

Remedy: Restore units that have been changed over to the factory setting.

F07090 Drive: Upper torque limit less than the lower torque limit

Message value: -
Drive object: SERVO_S110-CAN, SERVO_S110-DP, SERVO_S110-PN
Reaction: OFF2 (NONE, OFF1, OFF3)
Acknowledge: IMMEDIATELY
Cause: The upper torque limit is lower than the lower torque limit.
Remedy: P1 must be >= P2 if parameter P1 is connected to p1522 and parameter P2 to p1523.

A07200 Drive: Master control ON command present

Message value: -
Drive object: SERVO_S110-CAN, SERVO_S110-DP, SERVO_S110-PN
Reaction: NONE
Acknowledge: NONE
Cause: The ON/OFF1 command is present (no 0 signal).
The command is either influenced via binector input p0840 (current CDS) or control word bit 0 via the master control.
Remedy: Switch the signal via binector input p0840 (current CDS) or control word bit 0 via the master control to 0.

F07220 (N, A) Drive: Master control by PLC missing

Message value: -
Drive object: SERVO_S110-CAN, SERVO_S110-DP, SERVO_S110-PN
Reaction: OFF1 (NONE, OFF2, OFF3, STOP1, STOP2)
Acknowledge: IMMEDIATELY
Cause: The "master control by PLC" signal was missing in operation.
- interconnection of the binector input for "master control by PLC" is incorrect (p0854).
- the higher-level control has withdrawn the "master control by PLC" signal.
- data transfer via the fieldbus (master/drive) was interrupted.

Remedy: - check the interconnection of the binector input for "master control by PLC" (p0854).
- check the "master control by PLC" signal and, if required, switch in.
- check the data transfer via the fieldbus (master/drive).

Note:
If the drive should continue to operate after withdrawing "master control by PLC" then fault response must be parameterized to NONE or the message type should be parameterized as alarm.

Reaction upon N: NONE
Acknowl. upon N: NONE
Reaction upon A: NONE
Acknowl. upon A: NONE

F07300 (A) Drive: Line contactor feedback signal missing

Message value: -
Drive object: SERVO_S110-CAN, SERVO_S110-DP, SERVO_S110-PN
Reaction: OFF2 (NONE)
Acknowledge: IMMEDIATELY
Cause: - the line contactor was not able to be closed within the time in p0861.
- the line contactor was not able to be opened within the time in p0861.
- the line contactor dropped out during operation
- the line contactor has closed although the drive converter is powered down.

Remedy: - check the setting of p0860.
- check the feedback circuit from the line contactor.
- increase the monitoring time in p0861.

See also: p0860 (Line contactor feedback signal), p0861 (Line contactor monitoring time)

Reaction upon A: NONE
Acknowl. upon A: NONE

F07320 Drive: Automatic restart interrupted

Message value: %1
Drive object: SERVO_S110-CAN, SERVO_S110-DP, SERVO_S110-PN
Reaction: OFF2
Acknowledge: IMMEDIATELY
Cause:
- The specified number of restart attempts (p1211) has been completely used up because within the monitoring time (p1213) the faults were not able to be acknowledged. The number of restart attempts (p1211) is decremented at each new start attempt.
- there is no active ON command.
- the monitoring time for the power unit has expired (p0857).
- when exiting commissioning or at the end of the motor identification routine or the speed controller optimization, the drive unit is not automatically powered up again.

Fault value (r0949, interpret hexadecimal):
Only for internal Siemens troubleshooting.

Remedy:
- increase the number of restart attempts (p1211). The actual number of starting attempts is displayed in r1214.
- increase the delay time in p1212 and/or the monitoring time in p1213.
- issue an ON command (p0840).
- either increase or disable the monitoring time of the power unit (p0857).

A07321 Drive: Automatic restart active

Message value: -
Drive object: SERVO_S110-CAN, SERVO_S110-DP, SERVO_S110-PN
Reaction: NONE
Acknowledge: NONE
Cause: The automatic restart (AR) is active. When the line supply returns and/or the causes of the existing faults are removed the drive is automatically restarted. The pulses are enabled and the motor starts to rotate.
Remedy:
- the automatic restart (AR) should, if required, be inhibited (p1210 = 0).
- an automatic restart can be directly interrupted by withdrawing the power-on command (BI: p0840).

A07350 (F) Drive: Measuring probe parameterized to a digital output

Message value: %1
Drive object: All objects
Reaction: NONE
Acknowledge: NONE
Cause: The measuring probe is connected to a bi-directional digital input/output and the terminal is set as output.

Alarm value (r2124, interpret decimal):
8: DI/DO 8 (X122.9/X132.1)
9: DI/DO 9 (X122.10/X132.2)
10: DI/DO 10 (X122.12/X132.3)
11: DI/DO 11 (X122.13/X132.4)
12: DI/DO 12 (X132.9)
13: DI/DO 13 (X132.10)
14: DI/DO 14 (X132.12)
15: DI/DO 15 (X132.13)
To the terminal designation:
The first designation is valid for CU320, the second for CU305.

Remedy:
- set the terminal as input (p0728).
- de-select the measuring probe (p0488, p0489, p0580).

Reaction upon F: OFF1
Acknowl. upon F: IMMEDIATELY

A07400 (N) Drive: DC link voltage maximum controller active

Message value: -
Drive object: SERVO_S110-CAN, SERVO_S110-DP, SERVO_S110-PN
Reaction: NONE
Acknowledge: NONE
Cause: The DC link voltage controller has been activated because of the upper switch-in threshold (p1244).
A system deviation can occur between the setpoint and actual speed.
See also: r0056 (Status word, closed-loop control), p1240 (Vdc controller or Vdc monitoring configuration)
Remedy: Not necessary.
This alarm automatically disappears after the upper threshold has been distinctly undershot.
Otherwise, apply the following measures:
- use a Braking Module or regenerative feedback unit.
- increase the ramp-down times (p1121, p1135).
- shut down the Vdc_max controller (p1240 = 0).
Reaction upon N: NONE
Acknowl. upon N: NONE

A07402 (N) Drive: DC link voltage minimum controller active

Message value: -
Drive object: SERVO_S110-CAN, SERVO_S110-DP, SERVO_S110-PN
Reaction: NONE
Acknowledge: NONE
Cause: The DC link voltage controller has been activated due to the lower switch-in threshold (p1248).
A system deviation can occur between the setpoint and actual speed.
A possible cause can be e.g. that the line supply has failed.
See also: r0056 (Status word, closed-loop control), p1240 (Vdc controller or Vdc monitoring configuration), p1248 (DC link voltage threshold lower)
Remedy: Not necessary.
This alarm automatically disappears after the lower threshold has been distinctly exceeded.
Otherwise, apply the following measures:
- check the line supply and infeed.
- increase the ramp-up times (p1120).
- shut down the Vdc_min controller (p1240 = 0).
Reaction upon N: NONE
Acknowl. upon N: NONE

F07403 (N, A) Drive: Lower DC link voltage threshold reached

Message value: -
Drive object: SERVO_S110-CAN, SERVO_S110-DP, SERVO_S110-PN
Reaction: OFF1 (NONE, OFF2, OFF3)
Acknowledge: IMMEDIATELY
Cause: The DC link voltage monitoring is active (p1240 = 5, 6) and the lower DC link voltage threshold (p1248) was reached in the "Operation" state.
Remedy: - check the line supply voltage.
- check the infeed.
- reduce the lower DC link threshold (p1248).
- switch out (disable) the DC link voltage monitoring (p1240 = 0).
Reaction upon N: NONE
Acknowl. upon N: NONE
Reaction upon A: NONE
Acknowl. upon A: NONE

F07404 Drive: Upper DC link voltage threshold reached

Message value: -
Drive object: SERVO_S110-CAN, SERVO_S110-DP, SERVO_S110-PN
Reaction: OFF2 (NONE, OFF1, OFF3)
Acknowledge: IMMEDIATELY
Cause: The DC link voltage monitoring is active (p1240 = 4, 6) and the upper DC link voltage threshold (p1244) was reached in the "Operation" state.
Remedy:
- check the line supply voltage.
- check the infeed module or the Braking Module.
- increase the upper DC link voltage threshold (p1244).
- switch out (disable) the DC link voltage monitoring (p1240 = 0).

F07410 Drive: Current controller output limited

Message value: -
Drive object: SERVO_S110-CAN, SERVO_S110-DP, SERVO_S110-PN
Reaction: OFF2 (NONE, OFF1)
Acknowledge: IMMEDIATELY
Cause: The condition "I_act = 0 and Uq_set_1 longer than 16 ms at its limit" is present and can be caused by the following:
- motor not connected or motor contactor open.
- no DC link voltage present.
- Motor Module defective.

Remedy:
- connect the motor or check the motor contactor.
- check the DC link voltage (r0070).
- check the Motor Module.

F07411 Drive: Flux controller output limited

Message value: -
Drive object: SERVO_S110-CAN, SERVO_S110-DP, SERVO_S110-PN
Reaction: OFF2 (NONE, OFF1)
Acknowledge: IMMEDIATELY
Cause: The specified flux setpoint cannot be reached although 90% of the maximum current has been specified.
- incorrect motor data.
- motor data and motor configuration (star-delta) do not match.
- the current limit has been set too low for the motor.
- induction motor (encoderless, open-loop controlled) in I2t limiting.
- the Motor Module is too small.

Remedy:
- correct the motor data.
- check the motor configuration.
- correct the current limits (p0640, p0323).
- reduce the induction motor load.
- if required, use a larger Motor Module.

F07412 Drive: Commutation angle incorrect (motor model)

Message value: -
Drive object: SERVO_S110-CAN, SERVO_S110-DP, SERVO_S110-PN
Reaction: ENCODER (NONE, OFF2)
Acknowledge: IMMEDIATELY
Cause: An incorrect commutation angle was detected that can result in a positive coupling in the speed controller.
Possible causes:
- the motor encoder is incorrectly adjusted with respect to the magnet position.
- the motor encoder is damaged.
- the angular commutation offset is incorrectly set (p0431).
- data to calculate the motor model has been incorrectly set (p0356 (motor-stator leakage inductance) and/or p0350 (motor-stator resistance) and/or p0352 (cable resistance).

- the changeover speed for the motor model is too low (p1752). The monitoring function only becomes effective above the changeover speed.
- pole position identification might have calculated an incorrect value when activated (p1982 = 1).
- the motor encoder speed signal is faulted.
- the control loop is instable due to incorrect parameterization.

Fault value (r0949, interpret decimal):

0: The comparison of the pole position angle from the encoder and motor model resulted in an excessively high value (> 80 ° electrical).

Remedy:

- if the encoder mounting was changed - re-adjust the encoder.
- replace the defective motor encoder.
- correctly set the angular commutation offset (p0431). If required, determine using p1990.
- correctly set the motor stator resistance, cable resistance and motor-stator leakage inductance (p0350, p0352, p0356).

Calculate the cable resistance from the cross-section and length, check the inductance and stator resistance using the motor data sheet, measure the stator resistance, e.g. using a multimeter - and if required, again identify the values using the stationary motor data identification (p1910).

- increase the changeover speed for the motor model (p1752). The monitoring is completely de-activated for p1752 > p1082 (maximum speed).
- with pole position identification activated (p1982 = 1) check the procedure for pole position identification (p1980) and force a new pole position identification procedure by means of de-selection followed by selection (p1982 = 0 -> 1).

Note:

For High Dynamic Motors (1FK7xxx-7xxx), for applications with a higher current, if necessary, the monitoring should be disabled.

F07413 Drive: Commutation angle incorrect (pole position identification)

Message value: -

Drive object: SERVO_S110-CAN, SERVO_S110-DP, SERVO_S110-PN

Reaction: ENCODER (NONE, OFF2)

Acknowledge: IMMEDIATELY

Cause: An incorrect commutation angle was detected that can result in a positive coupling in the speed controller.

Within the pole position identification routine (p1982 = 2):

- a difference of > 45 ° electrical to the encoder angle was determined.

Remedy:

- correctly set the angular commutation offset (p0431).
- re-adjust the motor encoder after the encoder has been replaced.
- replace the defective motor encoder.
- check the pole position identification routine. If the pole position identification routine is not suitable for this motor type, then disable the plausibility check (p1982 = 0).

F07414 (N, A) Drive: Encoder serial number changed

Message value: -

Drive object: SERVO_S110-CAN, SERVO_S110-DP, SERVO_S110-PN

Reaction: ENCODER (NONE, OFF2)

Acknowledge: IMMEDIATELY

Cause: The serial number of the motor encoder of a synchronous motor has changed. The change was only checked for encoders with serial number (e.g. EnDat encoders) and build-in motors (e.g. p0300 = 401) or third-party motors (p0300 = 2).

Cause 1:

The encoder was replaced.

Cause 2:

A third-party, built-in or linear motor was re-commissioned.

Cause 3:

The motor with integrated and adjusted encoder was replaced.

Cause 4:

The firmware was updated to a version that checks the encoder serial number.

Remedy: Re causes 1, 2:
Carry out an automatic adjustment using the pole position identification routine. Acknowledge fault. Initiate the pole position identification routine with p1990 = 1. Then check that the pole position identification routine is correctly executed.
SERVO:
If a pole position identification technique is selected in p1980, and if p0301 does not contain a motor type with an encoder adjusted in the factory, then p1990 is automatically activated.
or
Set the adjustment via p0431. In this case, the new serial number is automatically accepted.
or
Mechanically adjust the encoder. Accept the new serial number with p0440 = 1.
Re causes 3, 4:
Accept the new serial number with p0440 = 1.
Reaction upon N: NONE
Acknowl. upon N: NONE
Reaction upon A: NONE
Acknowl. upon A: NONE

N07415 (F) Drive: Angular commutation offset transfer running

Message value: -
Drive object: SERVO_S110-CAN, SERVO_S110-DP, SERVO_S110-PN
Reaction: OFF2
Acknowledge: NONE
Cause: The angular commutation offset was automatically determined using p1990 = 1.
This fault causes the pulses to be suppressed - this is necessary to transfer the angular commutation offset to p0431.
See also: p1990 (Encoder adjustment determine angular commutation offset)
Remedy: The fault can be acknowledged without any additional measures.
Reaction upon F: OFF2
Acknowl. upon F: IMMEDIATELY

F07420 Drive: Current setpoint filter natural frequency > Shannon frequency

Message value: %1
Drive object: SERVO_S110-CAN, SERVO_S110-DP, SERVO_S110-PN
Reaction: NONE (OFF1, OFF2, OFF3)
Acknowledge: IMMEDIATELY (POWER ON)
Cause: One of the filter natural frequencies is greater than the Shannon frequency.
The Shannon frequency is calculated according to the following formula: 0.5 / p0115[0]
Fault value (r0949, interpret hexadecimal):
Bit 0: Filter 1 (p1658, p1660)
Bit 1: Filter 2 (p1663, p1665)
Bit 2: Filter 3 (p1668, p1670)
Bit 3: Filter 4 (p1673, p1675)
Bit 8 ... 15: Data set number (starting from zero)
Remedy: - reduce the numerator or denominator natural frequency of the current setpoint filter involved.
- reduce the current controller sampling time (p0115[0]).
- switch out the filter involved (p1656).

F07421 Drive: Speed filter natural frequency > Shannon frequency

Message value: %1
Drive object: SERVO_S110-CAN, SERVO_S110-DP, SERVO_S110-PN
Reaction: NONE (OFF1, OFF2, OFF3)
Acknowledge: IMMEDIATELY (POWER ON)
Cause: One of the filter natural frequencies is greater than the Shannon frequency.
The Shannon frequency is calculated according to the following formula: 0.5 / p0115[1]

Fault value (r0949, interpret hexadecimal):
Bit 0: Filter 1 (p1417, p1419)
Bit 1: Filter 2 (p1423, p1425)
Bit 8 ... 15: Data set number (starting from zero)

Remedy: - reduce the numerator or denominator natural frequency of the speed setpoint filter involved.
- reduce the speed controller sampling time (p0115[1]).
- switch out the filter involved (p1414).

F07422 Drive: Reference model natural frequency > Shannon frequency

Message value: -
Drive object: SERVO_S110-CAN, SERVO_S110-DP, SERVO_S110-PN
Reaction: NONE (OFF1, OFF2, OFF3)
Acknowledge: IMMEDIATELY (POWER ON)
Cause: The natural filter frequency of the PT2 element for the reference model (p1433) is greater than the Shannon frequency.
The Shannon frequency is calculated according to the following formula: 0.5 / p0115[1]
Remedy: - reduce the natural frequency of PT2 element for reference model (p1433).
- reduce the speed controller sampling time (p0115[1]).

F07426 (A) Technology controller actual value limited

Message value: %1
Drive object: SERVO_S110-CAN, SERVO_S110-DP, SERVO_S110-PN
Reaction: OFF1 (IASC/DCBRAKE, NONE, OFF2, OFF3)
Acknowledge: IMMEDIATELY
Cause: The actual value for the technology controller, interconnected via connector input p2264, has reached a limit.
Fault value (r0949, interpret decimal):
1: upper limit reached.
2: lower limit reached.
Remedy: - adapt the limits to the signal level (p2267, p2268).
- check the scaling of the actual value (p2264).
See also: p2264 (Technology controller actual value), p2267 (Technology controller upper limit actual value), p2268 (Technology controller lower limit actual value)
Reaction upon A: NONE
Acknowl. upon A: NONE

F07429 Drive: DSC without encoder not possible

Message value: -
Drive object: SERVO_S110-CAN, SERVO_S110-DP, SERVO_S110-PN
Reaction: OFF2
Acknowledge: IMMEDIATELY (POWER ON)
Cause: The function DSC (Dynamic Servo Control) was activated although there is no encoder.
See also: p1191 (DSC position controller gain KPC)
Remedy: If there is no encoder and connector input p1191 (DSC position controller gain) is interconnected, then connector input p1191 must have a 0 signal.

F07430 Drive: Changeover to open-loop torque controlled operation not possible

Message value: -
Drive object: SERVO_S110-CAN, SERVO_S110-DP, SERVO_S110-PN
Reaction: OFF2 (NONE, OFF1, OFF3)
Acknowledge: IMMEDIATELY
Cause: For encoderless operation, the converter cannot change over to closed-loop torque-controlled operation (BI: p1501).
Remedy: Do not attempt to cover over to closed-loop torque-controlled operation.

F07431 Drive: Changeover to encoderless operation not possible

Message value: -
Drive object: SERVO_S110-CAN, SERVO_S110-DP, SERVO_S110-PN
Reaction: OFF2 (OFF1)
Acknowledge: IMMEDIATELY
Cause: For closed-loop torque control, the converter cannot change over to encoderless operation (p1404).
Remedy: Do not attempt to change over to encoderless operation.

F07432 Drive: Motor without overvoltage protection

Message value: %1
Drive object: SERVO_S110-CAN, SERVO_S110-DP, SERVO_S110-PN
Reaction: OFF2 (OFF1)
Acknowledge: IMMEDIATELY
Cause: In the case of a fault at maximum speed, the motor can generate an overvoltage that can destroy the drive system.
Fault value (r0949, interpret hexadecimal):
Associated Drive Data Set (DDS).
Remedy: Overvoltage protection can be implemented in the following ways:
- limit the maximum speed (p1082) without any additional protection.
The maximum speed without protection is calculated as follows:
Rotary synchronous motors: p1082 [rpm] <= 11.695 * p0297/p0316 [Nm/A]
Linear motors: p1082 [m/min] <= 73.484 * p0297/p0316 [N/A]
Rotary synchronous motors connected to a high-frequency converter: p1082 [rpm] <= 4.33165 * (-p0316 + square root(p0316^2 + 4.86E-9 * (p0297 * r0313)^2 * (r0377 - r0233) [mH] * r0234 [µF]) / (p0297 * r0313^2 * (r0377 - r0233) [mH] * r0234 [µF])
Linear motor connected to a high-frequency converter: p1082 [m/min] <= 0.6894 * (-p0316 + square root(p0316^2 + 1.91865E-7 * (p0297 * r0313 * 3.1415)^2 * (r0377 - r0233) [mH] * r0234 [µF]) / (p0297 * r0313^2 * (r0377 - r0233) [mH] * r0234 [µF])
Rotary induction motor connected to a high-frequency converter: p1082 [rpm] <= Maximum (2.11383E5 / (r313 * square root((r0377 [mH] + r0382 [mH]) * r0234 [µF])) ; 0.6364*p0297*p0311[rpm] / p0304)
- use a Voltage Protection Module (VPM) in conjunction with the function "Safe Torque Off" (p9601, p9801) (only for synchronous motors).
When using a synchronous motor with VPM connected to a high-frequency converter, the following must apply: p1082 [rpm] <= p0348 * (r0377 + p0233) / p0233
When a fault condition exists, the VPM short-circuits the motors. During the short-circuit, the pulses must be suppressed - this means that the terminals for the function "Safe Torque Off" (STO) must be connected to the VPM.
When using a VPM, p0643 must be set to 1.
- activating the internal voltage protection (IVP) with p1231 = 3 (only for synchronous motors).
See also: p0643 (Overvoltage protection for synchronous motors), p1231 (Armature short-circuit / DC braking configuration)

F07433 Drive: Closed-loop control with encoder is not possible as the encoder has not been unparked

Message value: %1
Drive object: SERVO_S110-CAN, SERVO_S110-DP, SERVO_S110-PN
Reaction: NONE (OFF1, OFF2, OFF3)
Acknowledge: IMMEDIATELY
Cause: The changeover to closed-loop control with encoder is not possible as the encoder has not been unparked.
Remedy: - check whether the encoder firmware supports the "parking" function (r0481.6 = 1).
- upgrade the firmware.
Note:
For long-stator motors (p3870.0 = 1), the following applies:
The encoder must have completed the unparking procedure (r3875.0 = 1) before a changeover can be made to closed-loop control with encoder. The encoder is unparked using binector input p3876 = 0/1 signal and remains until a 0 signal in this state.

F07434 Drive: It is not possible to change the direction of rotation with the pulses enabled

Message value: -

Drive object: SERVO_S110-CAN, SERVO_S110-DP, SERVO_S110-PN

Reaction: OFF2

Acknowledge: IMMEDIATELY

Cause: A drive data set was selected - with the pulses enabled - which has a different parameterized direction of rotation (p1821).

It is only possible to change the motor direction of rotation using p1821 when the pulses are inhibited.

Remedy: - change over the drive data set with the pulses inhibited.

- ensure that the changeover to a drive data set does not result in the motor direction of rotation being changed (i.e. for these drive data sets, the same value must be in p1821).

See also: p1821 (Dir of rot)

F07439 Drive: Higher current controller dynamic performance not possible

Message value: %1

Drive object: SERVO_S110-CAN, SERVO_S110-DP, SERVO_S110-PN

Reaction: OFF2 (NONE)

Acknowledge: IMMEDIATELY

Cause: The function "Current controller dynamics higher" (p1810.11 = 1) is selected, however is not supported by the power unit (r0192.27 = 0) or by the safety technology without encoder (9506 = 1).

Fault value (r0949, interpret decimal):

1:

- firmware of the booksize power unit is not up-to-date.
- blocksize or S120 combi power unit was used.

2:

- a sine-cosine encoder with encoderless safety technology is used.

Remedy: In general:

- Deselect the function "Current controller dynamics higher" (p1810.11 = 0) and if required, set the current, speed and position controller again or calculate (p0340 = 4).

For fault value = 1:

- If necessary, upgrade the firmware of the booksize power unit to a later version (version >= 4.4).
- Use a booksize power unit (version >= 4.4).

For fault value = 2:

- Re-parameterize encoderless safety technology (9506 = 1) to safety technology with an encoder (p9506 = 0).

See also: r0192 (Power unit firmware properties), p1810 (Modulator configuration), p9506 (SI Motion function specification (processor 1))

A07440 EPOS: Jerk time is limited

Message value: -

Drive object: SERVO_S110-CAN, SERVO_S110-DP, SERVO_S110-PN

Reaction: NONE

Acknowledge: NONE

Cause: The calculation of the jerk time Tr = max(p2572, p2573) / p2574 resulted in an excessively high value so that the jerk time is internally limited to 1000 ms.

Note:

The alarm is also output if jerk limiting is not active.

Remedy: - increase the jerk limiting (p2574).

- reduce maximum acceleration or maximum deceleration (p2572, p2573).

See also: p2572 (EPOS maximum acceleration), p2573 (EPOS maximum deceleration), p2574 (EPOS jerk limiting)

A07441 LR: Save the position offset of the absolute encoder adjustment

Message value: -
Drive object: SERVO_S110-CAN, SERVO_S110-DP, SERVO_S110-PN
Reaction: NONE
Acknowledge: NONE
Cause: The status of the absolute encoder adjustment has changed.
In order to permanently save the determined position offset (p2525) it must be saved in a non-volatile fashion (p0971, p0977).
Remedy: Not necessary.
This alarm automatically disappears after the offset has been saved.
See also: p2507 (LR absolute encoder adjustment status), p2525 (LR encoder adjustment offset)

F07442 (A) LR: Multiturn does not match the modulo range

Message value: -
Drive object: SERVO_S110-CAN, SERVO_S110-DP, SERVO_S110-PN
Reaction: OFF1 (OFF2, OFF3)
Acknowledge: IMMEDIATELY
Cause: The ratio between the multiturn resolution and the modulo range (p2576) is not an integer number.
This results in the adjustment being set back, as the position actual value cannot be reproduced after power-off/power-on.
Remedy: Make the ration between the multiturn resolution and the modulo range an integer number.
The ratio v is calculated as follows:
1. Motor encoder without position tracking:
v = (p0421 * p2506 * p0433 * p2505) / (p0432 * p2504 * p2576)
2. Motor encoder with position tracking for the measuring gear:
v = (p0412 * p2506 * p2505) / (p2504 * p2576)
3. Motor encoder with position tracking for the load gear:
v = (p2721 * p2506 * p0433) / (p0432 * p2576)
4. Motor encoder with position tracking for the load and measuring gear:
v = (p2721 * p2506) / p2576
5. Direct encoder without position tracking:
v = (p0421 * p2506 * p0433) / (p0432 * p2576)
6. Direct encoder with position tracking for the measuring gear:
v = (p0412 * p2506) / p2576
Note:
With position tracking, it is recommended that p0412 and p2721 are changed
See also: p0432, p0433, p2504, p2505, p2506, p2576, p2721
Reaction upon A: NONE
Acknowl. upon A: NONE

F07443 (A) LR: Reference point coordinate not in the permissible range

Message value: %1
Drive object: SERVO_S110-CAN, SERVO_S110-DP, SERVO_S110-PN
Reaction: OFF1 (OFF2, OFF3)
Acknowledge: IMMEDIATELY
Cause: The reference point coordinate received when adjusting the encoder via connector input p2599 lies outside the half of the encoder range and cannot be set as actual axis position.
Fault value (r0949, interpret decimal):
Maximum permissible value for the reference point coordinate.
Remedy: Set the reference point coordinate to a lower value than specified in the fault value.
See also: p2598 (EPOS reference point coordinate signal source), p2599 (EPOS reference point coordinate value)
Reaction upon A: NONE
Acknowl. upon A: NONE

F07446 (A) Load gear: Position tracking cannot be reset

Message value: %1
Drive object: SERVO_S110-CAN, SERVO_S110-DP, SERVO_S110-PN
Reaction: OFF1 (OFF2, OFF3)
Acknowledge: IMMEDIATELY
Cause: The position tracking cannot be reset.
Remedy: Reset the position tracking as follows:
- select encoder commissioning (p0010 = 4).
- reset position tracking, position (p2720.2 = 1).
- de-select encoder commissioning (p0010 = 0).

The fault should then be acknowledged and, if necessary, the absolute encoder adjusted (p2507).
Reaction upon A: NONE
Acknowl. upon A: NONE

F07447 Load gear: Position tracking, maximum actual value exceeded

Message value: Component number: %1, encoder data set: %2, drive data set: %3
Drive object: SERVO_S110-CAN, SERVO_S110-DP, SERVO_S110-PN
Reaction: NONE
Acknowledge: IMMEDIATELY
Cause: When the position tracking of the load gear is configured, the drive/encoder (motor encoder) identifies a maximum possible absolute position actual value (r2723) that can no longer be represented within 32 bits.
Maximum value: p0408 * p2721 * 2^p0419
Fault value (r0949, interpret hexadecimal):
ccbbaa hex
aa = encoder data set
bb = component number
cc = drive data set
See also: p0408 (Rotary encoder pulse number), p0419 (Fine resolution absolute value Gx_XIST2 (in bits)), p2721 (Load gear rotary absolute encoder revolutions virtual)
Remedy: - reduce the fine resolution (p0419).
- reduce the multiturn resolution (p2721).

See also: p0419 (Fine resolution absolute value Gx_XIST2 (in bits)), p2721 (Load gear rotary absolute encoder revolutions virtual)

F07448 (A) Load gear: Position tracking, linear axis has exceeded the maximum range

Message value: -
Drive object: SERVO_S110-CAN, SERVO_S110-DP, SERVO_S110-PN
Reaction: OFF1 (NONE, OFF2, OFF3)
Acknowledge: IMMEDIATELY
Cause: For a configured linear axis/no modulo axis, the currently effective motor encoder (encoder 1) has exceeded the maximum possible traversing range.
For the configured linear axis, the maximum traversing range is defined to be 64x (+/- 32x) of p0421. It should be read in p2721 and interpreted as the number of load revolutions.
Note:
Only the motor encoder in the currently effective drive data set is monitored here. The actual effective drive data set is displayed in x = r0051 and the corresponding motor encoder is specified in in p0187[x].
Remedy: The fault should be resolved as follows:
- select encoder commissioning (p0010 = 4).
- reset position tracking, position (p2720.2 = 1).
- de-select encoder commissioning (p0010 = 0).

The fault should then be acknowledged and the absolute encoder adjusted.
Reaction upon A: NONE
Acknowl. upon A: NONE

F07449 (A) Load gear: Position tracking actual position outside tolerance window

Message value: %1

Drive object: SERVO_S110-CAN, SERVO_S110-DP, SERVO_S110-PN

Reaction: OFF1 (NONE, OFF2, OFF3)

Acknowledge: IMMEDIATELY

Cause: When powered down, the currently effective motor encoder was moved through a distance greater than was parameterized in the tolerance window. It is possible that there is no longer any reference between the mechanical system and encoder.

Note:

Only the motor encoder in the currently effective drive data set is monitored here. The actual effective drive data set is displayed in x = r0051 and the corresponding motor encoder is specified in in p0187[x].

Fault value (r0949, interpret decimal):

Deviation (difference) to the last encoder position in increments of the absolute value after the measuring gear - if one is being used. The sign designates the traversing direction.

Note:

The deviation (difference) found is also displayed in r2724.

See also: p2722 (Load gear position tracking tolerance window), r2724 (Load gear position difference)

Remedy: Reset the position tracking as follows:

- select encoder commissioning (p0010 = 4).
- reset position tracking, position (p2720.2 = 1).
- de-select encoder commissioning (p0010 = 0).

The fault should then be acknowledged and, if necessary, the absolute encoder adjusted (p2507).

See also: p0010 (Drive commissioning parameter filter), p2507 (LR absolute encoder adjustment status)

Reaction upon A: NONE

Acknowl. upon A: NONE

F07450 (A) LR: Standstill monitoring has responded

Message value: -

Drive object: SERVO_S110-CAN, SERVO_S110-DP, SERVO_S110-PN

Reaction: OFF1 (OFF2, OFF3)

Acknowledge: IMMEDIATELY

Cause: After the standstill monitoring time (p2543) expired, the drive left the standstill window (p2542).

- position actual value inversion incorrectly set (p0410).
- standstill window set too small (p2542).
- standstill monitoring time set too low (p2543).
- position loop gain too low (p2538).
- position loop gain too high (instability/oscillation, p2538).
- mechanical overload.
- check the connecting cable, motor/drive converter (phase missing, interchange).
- when selecting motor identification, select tracking mode (BI: p2655[0] = 1 signal).
- when selecting function generator, select tracking mode (BI: p2655[0] = 1 signal) and de-activate position control (BI:p2550 = 0 signal).

Remedy: Check the causes and resolve.

Reaction upon A: NONE

Acknowl. upon A: NONE

F07451 (A) LR: Position monitoring has responded

Message value: -

Drive object: SERVO_S110-CAN, SERVO_S110-DP, SERVO_S110-PN

Reaction: OFF1 (OFF2, OFF3)

Acknowledge: IMMEDIATELY

Cause: When the position monitoring time (p2545) expired, the drive had still not reached the positioning window (p2544).

- positioning window parameterized too small (p2544).
- position monitoring time parameterized too short (p2545).
- position loop gain too low (p2538).

- position loop gain too high (instability/oscillation, p2538).
- drive mechanically locked.

Remedy: Check the causes and resolve.
Reaction upon A: NONE
Acknowl. upon A: NONE

F07452 (A) LR: Following error too high

Message value: -
Drive object: SERVO_S110-CAN, SERVO_S110-DP, SERVO_S110-PN
Reaction: OFF1 (OFF2, OFF3)
Acknowledge: IMMEDIATELY
Cause: The difference between the position setpoint position actual value (following error dynamic model, r2563) is higher than the tolerance (p2546).
- the drive torque or accelerating capacity exceeded.
- position measuring system fault.
- position control sense incorrect.
- mechanical system locked.
- excessively high traversing velocity or excessively high position reference value (setpoint) differences

Remedy: Check the causes and resolve.
Reaction upon A: NONE
Acknowl. upon A: NONE

F07453 LR: Position actual value preprocessing error

Message value: -
Drive object: SERVO_S110-CAN, SERVO_S110-DP, SERVO_S110-PN
Reaction: OFF1 (OFF2, OFF3)
Acknowledge: IMMEDIATELY
Cause: An error has occurred during the position actual value preprocessing.
Remedy: Check the encoder for the position actual value preprocessing.
See also: p2502 (LR encoder assignment)

A07454 LR: Position actual value preprocessing does not have a valid encoder

Message value: -
Drive object: SERVO_S110-CAN, SERVO_S110-DP, SERVO_S110-PN
Reaction: NONE
Acknowledge: NONE
Cause: One of the following problems has occurred with the position actual value preprocessing:
- an encoder is not assigned for the position actual value preprocessing (p2502 = 0).
- an encoder is assigned, but no encoder data set (p0187 = 99 or p0188 = 99).
- an encoder an an encoder data set have been assigned, however, the encoder data set does not contain any encoder data (p0400 = 0) or invalid data (e.g. p0408 = 0).

Remedy: Check the drive data sets, encoder data sets and encoder assignment.
See also: p0187 (Encoder 1 encoder data set number), p0188 (Encoder 2 encoder data set number), p0400 (Encoder type selection), p2502 (LR encoder assignment)

A07455 EPOS: Maximum velocity limited

Message value: -
Drive object: SERVO_S110-CAN, SERVO_S110-DP, SERVO_S110-PN
Reaction: NONE
Acknowledge: NONE
Cause: The maximum velocity (p2571) is too high to correctly calculate the modulo correction.
Within the sampling time for positioning (p0115[5]), with the maximum velocity, a maximum of the half modulo length must be moved through. p2571 was limited to this value.
Remedy:
- reduce the maximum velocity (p2571).
- increase the sampling time for positioning (p0115[5]).

A07456 EPOS: Setpoint velocity limited

Message value: -
Drive object: SERVO_S110-CAN, SERVO_S110-DP, SERVO_S110-PN
Reaction: NONE
Acknowledge: NONE
Cause: The actual setpoint velocity is greater than the parameterized maximum velocity (p2571) and is therefore limited.
Remedy: - check the entered setpoint velocity.
- reduce the velocity override (CI: p2646).
- increase the maximum velocity (p2571).
- check the signal source for the externally limited velocity (CI: p2594).

A07457 EPOS: Combination of input signals illegal

Message value: %1
Drive object: SERVO_S110-CAN, SERVO_S110-DP, SERVO_S110-PN
Reaction: NONE
Acknowledge: NONE
Cause: An illegal combination of input signals that are simultaneously set was identified.
Alarm value (r2124, interpret decimal):
0: Jog 1 and jog 2 (p2589, p2590).
1: Jog 1 or jog 2 and direct setpoint input/MDI (p2589, p2590, p2647).
2: Jog 1 or jog 2 and start referencing (p2589, p2590, p2595).
3: Jog 1 or jog 2 and activate traversing task (p2589, p2590, p2631).
4: Direct setpoint input/MDI and starting referencing (p2647, p2595).
5: Direct setpoint input/MDI and activate traversing task (p2647, p2631).
6: Start referencing and activate traversing task (p2595, p2631).
Remedy: Check the appropriate input signals and correct.

F07458 EPOS: Reference cam not found

Message value: -
Drive object: SERVO_S110-CAN, SERVO_S110-DP, SERVO_S110-PN
Reaction: OFF1 (OFF2, OFF3)
Acknowledge: IMMEDIATELY
Cause: After starting the search for reference, the axis moved through the maximum permissible distance to search for the reference cam without actually finding the reference cam.
Remedy: - check the "reference cam" binector input (BI: p2612).
- check the maximum permissible distance to the reference cam (p2606).
- if axis does not have any reference cam, then set p2607 to 0.
See also: p2606 (EPOS search for reference reference cam maximum distance), p2607 (EPOS search for reference reference cam present), p2612 (EPOS search for reference reference cam)

F07459 EPOS: No zero mark

Message value: -
Drive object: SERVO_S110-CAN, SERVO_S110-DP, SERVO_S110-PN
Reaction: OFF1 (OFF2, OFF3)
Acknowledge: IMMEDIATELY
Cause: After leaving the reference cam, the axis has traversed the maximum permissible distance between the reference cam and zero mark without finding the zero mark.
Remedy: - check the encoder regarding the zero mark
- check the maximum permissible distance between the reference cam and zero mark (p2609).
- use an external encoder zero mark (equivalent zero mark) (p0495).
See also: p0495 (Equivalent zero mark input terminal), p2609 (EPOS search for reference max distance ref cam and zero mark)

F07460 EPOS: End of reference cam not found

Message value: -
Drive object: SERVO_S110-CAN, SERVO_S110-DP, SERVO_S110-PN
Reaction: OFF1 (OFF2, OFF3)
Acknowledge: IMMEDIATELY
Cause: During the search for reference, when the axis reached the zero mark it also reached the end of the traversing range without detecting an edge at the binector input "reference cam" (BI: p2612).
Maximum traversing range: -2147483648 [LU] ... -2147483647 [LU]
Remedy: - check the "reference cam" binector input (BI: p2612).
- repeat the search for reference.
See also: p2612 (EPOS search for reference reference cam)

A07461 EPOS: Reference point not set

Message value: -
Drive object: SERVO_S110-CAN, SERVO_S110-DP, SERVO_S110-PN
Reaction: NONE
Acknowledge: NONE
Cause: When starting a traversing block/direct setpoint input, a reference point is not set (r2684.11 = 0).
Remedy: Reference the system (search for reference, flying referencing, set reference point).

A07462 EPOS: Selected traversing block number does not exist

Message value: %1
Drive object: SERVO_S110-CAN, SERVO_S110-DP, SERVO_S110-PN
Reaction: NONE
Acknowledge: NONE
Cause: A traversing block selected via BI: p2625 to BI: p2630 was started via BI: p2631 = 0/1 edge "Activate traversing task".
- the number of the started traversing block is not contained in p2616[0...n].
- the started traversing block is suppressed.
Alarm value (r2124, interpret decimal):
Number of the selected traversing block that is also not available.
Remedy: - correct the traversing program.
- select an available traversing block number.

A07463 (F) EPOS: External block change not requested in the traversing block

Message value: %1
Drive object: SERVO_S110-CAN, SERVO_S110-DP, SERVO_S110-PN
Reaction: NONE
Acknowledge: NONE
Cause: For a traversing block with the block change enable CONTINUE_EXTERNAL_ALARM, the external block change was not requested.
Alarm value (r2124, interpret decimal):
Number of the traversing block.
Remedy: Resolve the reason as to why the edge is missing at binector input (BI: p2632).
Reaction upon F: OFF1
Acknowl. upon F: IMMEDIATELY

F07464 EPOS: Traversing block is inconsistent

Message value: %1
Drive object: SERVO_S110-CAN, SERVO_S110-DP, SERVO_S110-PN
Reaction: OFF1 (OFF2, OFF3)
Acknowledge: IMMEDIATELY
Cause: The traversing block does not contain valid information.
Alarm value (r2124, interpret decimal):
Number of the traversing block with invalid information.
Remedy: Check the traversing block and where relevant, take into consideration alarms that are present.

A07465 EPOS: Traversing block does not have a subsequent block

Message value: %1
Drive object: SERVO_S110-CAN, SERVO_S110-DP, SERVO_S110-PN
Reaction: NONE
Acknowledge: NONE
Cause: There is no subsequent block in the traversing block.
Alarm value (r2124, interpret decimal):
Number of the traversing block with the missing subsequent block.
Remedy: - parameterize this traversing block with the block change enable END.
- parameterize additional traversing blocks with a higher block number and for the last block, using the block change enable END.

A07466 EPOS: Traversing block number assigned a multiple number of times

Message value: %1
Drive object: SERVO_S110-CAN, SERVO_S110-DP, SERVO_S110-PN
Reaction: NONE
Acknowledge: NONE
Cause: The same traversing block number was assigned a multiple number of times.
Alarm value (r2124, interpret decimal):
Number of the traversing block that was assigned a multiple number of times.
Remedy: Correct the traversing blocks.

A07467 EPOS: Traversing block has illegal task parameters

Message value: %1
Drive object: SERVO_S110-CAN, SERVO_S110-DP, SERVO_S110-PN
Reaction: NONE
Acknowledge: NONE
Cause: The task parameter in the traversing block contains an illegal value.
Alarm value (r2124, interpret decimal):
Number of the traversing block with an illegal task parameter.
Remedy: Correct the task parameter in the traversing block.

A07468 EPOS: Traversing block jump destination does not exist

Message value: %1
Drive object: SERVO_S110-CAN, SERVO_S110-DP, SERVO_S110-PN
Reaction: NONE
Acknowledge: NONE
Cause: In a traversing block, a jump was programmed to a non-existent block.
Alarm value (r2124, interpret decimal):
Number of the traversing block with a jump destination that does not exist.
Remedy: - correct the traversing block.
- add the missing traversing block.

A07469 EPOS: Traversing block < target position < software limit switch minus

Message value: %1
Drive object: SERVO_S110-CAN, SERVO_S110-DP, SERVO_S110-PN
Reaction: NONE
Acknowledge: NONE
Cause: In the traversing block the specified absolute target position lies outside the range limited by the software limit switch minus.
Alarm value (r2124, interpret decimal):
Number of the traversing block with illegal target position.
Remedy: - correct the traversing block.
- change software limit switch minus (CI: p2578, p2580).

A07470 EPOS: Traversing block> target position > software limit switch plus

Message value: %1
Drive object: SERVO_S110-CAN, SERVO_S110-DP, SERVO_S110-PN
Reaction: NONE
Acknowledge: NONE
Cause: In the traversing block the specified absolute target position lies outside the range limited by the software limit switch plus.
Alarm value (r2124, interpret decimal):
Number of the traversing block with illegal target position.
Remedy: - correct the traversing block.
- change software limit switch plus (CI: p2579, p2581).

A07471 EPOS: Traversing block target position outside the modulo range

Message value: %1
Drive object: SERVO_S110-CAN, SERVO_S110-DP, SERVO_S110-PN
Reaction: NONE
Acknowledge: NONE
Cause: In the traversing block the target position lies outside the modulo range.
Alarm value (r2124, interpret decimal):
Number of the traversing block with illegal target position.
Remedy: - in the traversing block, correct the target position.
- change the modulo range (p2576).

A07472 EPOS: Traversing block ABS_POS/ABS_NEG not possible

Message value: %1
Drive object: SERVO_S110-CAN, SERVO_S110-DP, SERVO_S110-PN
Reaction: NONE
Acknowledge: NONE
Cause: In the traversing block the positioning mode ABS_POS or ABS_NEG were parameterized with the modulo correction not activated.
Alarm value (r2124, interpret decimal):
Number of the traversing block with the illegal positioning mode.
Remedy: Correct the traversing block.

A07473 (F) EPOS: Beginning of traversing range reached

Message value: -
Drive object: SERVO_S110-CAN, SERVO_S110-DP, SERVO_S110-PN
Reaction: NONE
Acknowledge: NONE
Cause: When traversing, the axis has moved to the traversing range limit.
Remedy: Move away in the positive direction.
Reaction upon F: OFF1 (OFF2, OFF3)
Acknowl. upon F: IMMEDIATELY

A07474 (F) EPOS: End of traversing range reached

Message value: -
Drive object: SERVO_S110-CAN, SERVO_S110-DP, SERVO_S110-PN
Reaction: NONE
Acknowledge: NONE
Cause: When traversing, the axis has moved to the traversing range limit.
Remedy: Move away in the negative direction.
Reaction upon F: OFF1 (OFF2, OFF3)
Acknowl. upon F: IMMEDIATELY

F07475 (A) EPOS: Target position < start of traversing range

Message value: -
Drive object: SERVO_S110-CAN, SERVO_S110-DP, SERVO_S110-PN
Reaction: OFF1 (OFF2, OFF3)
Acknowledge: IMMEDIATELY
Cause: The target position for relative traversing lies outside the traversing range.
Remedy: Correct the target position.
Reaction upon A: NONE
Acknowl. upon A: NONE

F07476 (A) EPOS: Target position > end of the traversing range

Message value: -
Drive object: SERVO_S110-CAN, SERVO_S110-DP, SERVO_S110-PN
Reaction: OFF1 (OFF2, OFF3)
Acknowledge: IMMEDIATELY
Cause: The target position for relative traversing lies outside the traversing range.
Remedy: Correct the target position.
Reaction upon A: NONE
Acknowl. upon A: NONE

A07477 (F) EPOS: Target position < software limit switch minus

Message value: -
Drive object: SERVO_S110-CAN, SERVO_S110-DP, SERVO_S110-PN
Reaction: NONE
Acknowledge: NONE
Cause: In the actual traversing operation, the target position is less than the software limit switch minus.
Remedy: - correct the target position.
- change software limit switch minus (CI: p2578, p2580).
See also: p2578 (EPOS software limit switch minus signal source), p2580 (EPOS software limit switch minus), p2582 (EPOS software limit switch activation)
Reaction upon F: OFF1 (OFF2, OFF3)
Acknowl. upon F: IMMEDIATELY

A07478 (F) EPOS: Target position > software limit switch plus

Message value: -
Drive object: SERVO_S110-CAN, SERVO_S110-DP, SERVO_S110-PN
Reaction: NONE
Acknowledge: NONE
Cause: In the actual traversing operation, the target position is greater than the software limit switch plus.
Remedy: - correct the target position.
- change software limit switch plus (CI: p2579, p2581).
See also: p2579 (EPOS software limit switch plus signal source), p2581 (EPOS software limit switch plus), p2582 (EPOS software limit switch activation)
Reaction upon F: OFF1 (OFF2, OFF3)
Acknowl. upon F: IMMEDIATELY

A07479 EPOS: Software limit switch minus reached

Message value: -
Drive object: SERVO_S110-CAN, SERVO_S110-DP, SERVO_S110-PN
Reaction: NONE
Acknowledge: NONE
Cause: The axis is at the position of the software limit switch minus. An active traversing block was interrupted.
Remedy: - correct the target position.
- change software limit switch minus (CI: p2578, p2580).
See also: p2578 (EPOS software limit switch minus signal source), p2580 (EPOS software limit switch minus), p2582 (EPOS software limit switch activation)

A07480 EPOS: Software limit switch plus reached

Message value: -
Drive object: SERVO_S110-CAN, SERVO_S110-DP, SERVO_S110-PN
Reaction: NONE
Acknowledge: NONE
Cause: The axis is at the position of the software limit switch plus. An active traversing block was interrupted.
Remedy: - correct the target position.
- change software limit switch plus (CI: p2579, p2581).
See also: p2579 (EPOS software limit switch plus signal source), p2581 (EPOS software limit switch plus), p2582 (EPOS software limit switch activation)

F07481 (A) EPOS: Axis position < software limit switch minus

Message value: -
Drive object: SERVO_S110-CAN, SERVO_S110-DP, SERVO_S110-PN
Reaction: OFF1 (OFF2, OFF3)
Acknowledge: IMMEDIATELY
Cause: The actual position of the axis is less than the position of the software limit switch minus.
Remedy: - correct the target position.
- change software limit switch minus (CI: p2578, p2580).
See also: p2578 (EPOS software limit switch minus signal source), p2580 (EPOS software limit switch minus), p2582 (EPOS software limit switch activation)
Reaction upon A: NONE
Acknowl. upon A: NONE

F07482 (A) EPOS: Axis position > software limit switch plus

Message value: -
Drive object: SERVO_S110-CAN, SERVO_S110-DP, SERVO_S110-PN
Reaction: OFF1 (OFF2, OFF3)
Acknowledge: IMMEDIATELY
Cause: The actual position of the axis is greater than the position of the software limit switch plus.
Remedy: - correct the target position.
- change software limit switch plus (CI: p2579, p2581).
See also: p2579 (EPOS software limit switch plus signal source), p2581 (EPOS software limit switch plus), p2582 (EPOS software limit switch activation)
Reaction upon A: NONE
Acknowl. upon A: NONE

A07483 EPOS: Travel to fixed stop clamping torque not reached

Message value: -
Drive object: SERVO_S110-CAN, SERVO_S110-DP, SERVO_S110-PN
Reaction: NONE
Acknowledge: NONE
Cause: The fixed stop in the traversing block was reached without the clamping torque/clamping force having been achieved.
Remedy: - Check the maximum torque-generating current (r1533).
- check the torque limits (p1520, p1521).
- check the power limits (p1530, p1531).
- check the BICO interconnections of the torque limits (p1522, p1523, p1528, p1529).

F07484 EPOS: Fixed stop outside the monitoring window

Message value: -
Drive object: SERVO_S110-CAN, SERVO_S110-DP, SERVO_S110-PN
Reaction: OFF3 (OFF1, OFF2)
Acknowledge: IMMEDIATELY
Cause: In the "fixed stop reached" state, the axis has moved outside the defined monitoring window (p2635).
Remedy: - check the monitoring window (p2635).
- check the mechanical system.

F07485 (A) EPOS: Fixed stop not reached

Message value: -
Drive object: SERVO_S110-CAN, SERVO_S110-DP, SERVO_S110-PN
Reaction: OFF1 (OFF2, OFF3)
Acknowledge: IMMEDIATELY
Cause: In a traversing block with the task FIXED STOP, the end position was reached without detecting a fixed stop.
Remedy: - check the traversing block and locate the target position further into the workpiece.
- check the "fixed stop reached" control signal (p2637).
- if required, reduce the maximum following error window to detect the fixed stop (p2634).

Reaction upon A: NONE
Acknowl. upon A: NONE

A07486 EPOS: Intermediate stop missing

Message value: -
Drive object: SERVO_S110-CAN, SERVO_S110-DP, SERVO_S110-PN
Reaction: NONE
Acknowledge: NONE
Cause: In the modes "traversing blocks" or "direct setpoint input/MDI" at the start of motion, the binector input "no intermediate stop/intermediate stop" (BI: p2640) did not have a 1 signal.
Remedy: Connect a 1 signal to the binector input "no intermediate stop/intermediate stop" (BI: p2640) and re-start motion.
See also: p2640 (EPOS intermediate stop (0 signal))

A07487 EPOS: Reject traversing task missing

Message value: -
Drive object: SERVO_S110-CAN, SERVO_S110-DP, SERVO_S110-PN
Reaction: NONE
Acknowledge: NONE
Cause: In the modes "traversing blocks" or "direct setpoint input/MDI" at the start of motion, the binector input "do not reject traversing task/reject traversing task" (BI: p2641) does not have a 1 signal.
Remedy: Connect a 1 signal to the binector input "do not reject traversing task/reject traversing task" (BI: p2641) and restart motion.
See also: p2641 (EPOS reject traversing task (0 signal))

F07488 EPOS: Relative positioning not possible

Message value: -
Drive object: SERVO_S110-CAN, SERVO_S110-DP, SERVO_S110-PN
Reaction: OFF1 (OFF2, OFF3)
Acknowledge: IMMEDIATELY
Cause: In the mode "direct setpoint input/MDI", for continuous transfer (p2649 = 1) relative positioning was selected (BI: p2648 = 0 signal).
Remedy: Check the control.

A07489 EPOS: Reference point correction outside the window

Message value: -
Drive object: SERVO_S110-CAN, SERVO_S110-DP, SERVO_S110-PN
Reaction: NONE
Acknowledge: NONE
Cause: For the function "flying referencing" the difference between the measured position at the measuring probe and the reference point coordinate lies outside the parameterized window.
Remedy: - check the mechanical system.
- check the parameterization of the window (p2602).

F07490 EPOS: Enable signal withdrawn while traversing

Message value: -
Drive object: SERVO_S110-CAN, SERVO_S110-DP, SERVO_S110-PN
Reaction: OFF1 (OFF2, OFF3)
Acknowledge: IMMEDIATELY
Cause: - for a standard assignment, another fault may have occurred as a result of withdrawing the enable signals.
- the drive is in the "switching on inhibited" state (for a standard assignment).
Remedy: - set the enable signals or check the cause of the fault that first occurred and then result (for a standard assignment).
- check the assignment to enable the basic positioning function.

F07491 (A) EPOS: STOP cam minus reached

Message value: -
Drive object: SERVO_S110-CAN, SERVO_S110-DP, SERVO_S110-PN
Reaction: OFF3
Acknowledge: IMMEDIATELY
Cause: A 0 signal was detected at binector input BI: p2569, i.e. the STOP cam minus was reached.
For a positive traversing direction, the STOP cam minus was reached - i.e. the wiring of the STOP cam is incorrect.
See also: p2569 (EPOS STOP cam minus)
Remedy: - leave the STOP cam minus in the positive traversing direction and return the axis to the valid traversing range.
- check the wiring of the STOP cam.
Reaction upon A: NONE
Acknowl. upon A: NONE

F07492 (A) EPOS: STOP cam plus reached

Message value: -
Drive object: SERVO_S110-CAN, SERVO_S110-DP, SERVO_S110-PN
Reaction: OFF3
Acknowledge: IMMEDIATELY
Cause: A 0 signal was detected at binector input BI: p2570, i.e. the STOP cam plus was reached.
For a negative traversing direction, the STOP cam plus was reached - i.e. the wiring of the STOP cam is incorrect.
See also: p2570 (EPOS STOP cam plus)
Remedy: - leave the STOP cam plus in the negative traversing direction and return the axis to the valid traversing range.
- check the wiring of the STOP cam.
Reaction upon A: NONE
Acknowl. upon A: NONE

F07493 LR: Overflow of the value range for position actual value

Message value: %1
Drive object: SERVO_S110-CAN, SERVO_S110-DP, SERVO_S110-PN
Reaction: OFF1 (OFF2, OFF3)
Acknowledge: IMMEDIATELY
Cause: The value range (-2147483648 ... 2147483647) for the position actual value representation was exceeded.
When the overflow occurs, the "referenced" or "adjustment absolute measuring system" status is reset.
Fault value (r0949, interpret decimal):
1: The position actual value (r2521) has exceeded the value range.
2: The encoder position actual value Gn_XIST2 (r0483) or the absolute value after the load gear (r2723) has exceeded the value range.
3: The maximum encoder value times the factor to convert the absolute position (r0483 and/or r2723) from increments to length units (LU) has exceeded the value range for displaying the position actual value.
Note:
For a linear encoder, the following must be maintained:
- p0407 * p2503 / (2^p0418*10^7) < 1
- p0407 * p2503 / (2^p0419*10^7) < 1

Remedy: If required, reduce the traversing range or position resolution (p2506).
Increase the fine resolution of absolute position actual value (p0419).
Note for fault value = 3:
If the value for the maximum possible absolute position (LU) is greater than 4294967296, then it is not possible to make an adjustment due to an overflow.
For rotary encoders, the maximum possible absolute position (LU) is calculated as follows:
1. Motor encoder without position tracking
p2506 * p0433 * p2505 / (p0432 * p2504)
p2506 * p0433 * p2505 * p0421 / (p0432 * p2504) for multiturn encoders
2. Motor encoder with position tracking for measuring gear:
p2506 * p0412 * p2505 / p2504
3. Motor encoder with position tracking for load gear
p2506 * p2721 * p0433 / p0432
4. Motor encoder with position tracking for load and measuring gear
p2506 * p2721
5. Direct encoder without position tracking
p2506 * p0433 / p0432
p2506 * p0433 * p0421 / p0432 for multiturn encoders
6. Direct encoder with position tracking for measuring gear
p2506 * p0412

F07494 LR: Drive Data Set changeover in operation

Message value: -
Drive object: SERVO_S110-CAN, SERVO_S110-DP, SERVO_S110-PN
Reaction: OFF1 (OFF2, OFF3)
Acknowledge: IMMEDIATELY
Cause: A Drive Data Set changeover (DDS) with a change of the mechanical relationships (p2503 ... 2506), direction of rotation (p1821) or the encoder assignment (p2502) was requested in operation.
Note:
DDS: Drive Data Set
Remedy: To changeover the drive data set, initially, exit the "operation" mode.

A07495 (F) LR: Reference function interrupted

Message value: -
Drive object: SERVO_S110-CAN, SERVO_S110-DP, SERVO_S110-PN
Reaction: NONE
Acknowledge: NONE
Cause: An activated reference function (reference mark search or measuring probe evaluation) was interrupted.
- an encoder fault has occurred (Gn_ZSW.15 = 1).
- position actual value was set during an activated reference function.
- simultaneously activate reference mark search and measuring probe evaluation (BI: p2508 and BI: p2509 = 1 signal).
- activated reference function (reference mark search or measuring probe evaluation) was de-activated (BI: p2508 and BI: p2509 = 0 signal).

Remedy: - check the causes and resolve.
- reset the control (BI: p2508 and BI: p2509 = 0 signal) and activate the requested function.

Reaction upon F: OFF1 (OFF2, OFF3)
Acknowl. upon F: IMMEDIATELY

A07496 EPOS: Enable not possible

Message value: %1
Drive object: SERVO_S110-CAN, SERVO_S110-DP, SERVO_S110-PN
Reaction: NONE
Acknowledge: NONE
Cause: It is not possible to enable the basic positioner because at least one signal is missing.

Alarm value (r2124, interpret decimal):
1: EPOS enable missing (BI: p2656).
2: Position actual value, valid feedback signal missing (BI: p2658).
See also: p2656 (EPOS enable basic positioner), p2658 (EPOS pos. actual value valid feedback signal)

Remedy: Check the appropriate binector inputs and signals.

A07497 LR: Position setting value activated

Message value: -
Drive object: SERVO_S110-CAN, SERVO_S110-DP, SERVO_S110-PN
Reaction: NONE
Acknowledge: NONE
Cause: The position actual value is set to the value received via CI: p2515while BI: p2514 = 1 signal. A possible system deviation cannot be corrected.
Remedy: Not necessary.
The alarm automatically disappears with BI: p2514 = 0 signal.

A07498 (F) LR: Measuring probe evaluation not possible

Message value: %1
Drive object: SERVO_S110-CAN, SERVO_S110-DP, SERVO_S110-PN
Reaction: NONE
Acknowledge: NONE
Cause: When evaluating the measuring probe, an error occurred.
Alarm value (r2124, interpret decimal):
6: The input terminal for the measuring probe is not set.
4098: Error when initializing the measuring probe.
4100: The measuring pulse frequency is too high.
> 50000: The measuring clock cycle is not a multiple integer of the position controller clock cycle.
Remedy: De-activate the measuring probe evaluation (BI: p2509 = 0 signal).
Re alarm value = 6:
Set the input terminal for the measuring probe (p0488, p0489 or p2517, p2518).
Re alarm value = 4098:
Check the Control Unit hardware.
Re alarm value = 4100:
Reduce the frequency of the measuring pulses at the measuring probe.
Re alarm value > 50000:
Set the clock cycle ratio of the measuring clock cycle to the position controller clock cycle to an integer multiple.
To do this, the currently effective measuring clock cycle can be determined from the alarm value as follows:
Tmeas [125 µs] = alarm value - 50000
With PROFIBUS, the measuring clock cycle corresponds to the PROFIBUS clock cycle (r2064[1]).
Without PROFIBUS, the measuring clock cycle is an internal cycle time that cannot be influenced.
Reaction upon F: OFF1
Acknowl. upon F: IMMEDIATELY

F07499 (A) EPOS: Reversing cam approached with the incorrect traversing direction

Message value: -
Drive object: SERVO_S110-CAN, SERVO_S110-DP, SERVO_S110-PN
Reaction: OFF3
Acknowledge: IMMEDIATELY
Cause: The reversing cam MINUS was approached in the positive traversing direction or the reversing cam PLUS was approached in the negative traversing direction.
See also: p2613 (EPOS search for reference reversing cam minus), p2614 (EPOS search for reference reversing cam plus)
Remedy: - check the wiring of the reversing cam (BI: p2613, BI: p2614).
- check the traversing direction to approach the reversing cam.
Reaction upon A: NONE
Acknowl. upon A: NONE

F07500 Drive: Power unit data set PDS not configured

Message value: Drive data set: %1
Drive object: All objects
Reaction: NONE
Acknowledge: IMMEDIATELY
Cause: Only for controlled line supply infeed/regenerative feedback units:
The power unit data set was not configured - this means that a data set number was not entered into the drive data set.
Fault value (r0949, interpret decimal):
Drive data set number of p0185.
Remedy: The index of the power unit data set associated with the drive data set should be entered into p0185.

F07501 Drive: Motor Data Set MDS not configured

Message value: Drive data set: %1
Drive object: All objects
Reaction: OFF2
Acknowledge: IMMEDIATELY
Cause: Only for power units:
The motor data set was not configured - this means that a data set number was not entered into the associated drive data set.
Fault value (r0949, interpret decimal):
The fault value includes the drive data set number of p0186.
Remedy: The index of the motor data set associated with the drive data set should be entered into p0186.
See also: p0186 (Motor Data Sets (MDS) number)

F07502 Drive: Encoder Data Set EDS not configured

Message value: Drive data set: %1
Drive object: All objects
Reaction: OFF2
Acknowledge: IMMEDIATELY
Cause: Only for power units:
The encoder data set was not configured - this means that a data set number was not entered into the associated drive data set.
Fault value (r0949, interpret decimal):
The fault value includes the drive data set number of p0187 or p0188.
The fault value is increased by 100 * encoder number (e.g. for p0188: Fault value 2xx with xx = data set number).
Remedy: The index of the encoder data set associated with the drive data set should be entered into p0187 (1st encoder) or p0188 (2nd encoder).

F07503 EPOS: STOP cam approached with the incorrect traversing direction

Message value: %1
Drive object: SERVO_S110-CAN, SERVO_S110-DP, SERVO_S110-PN
Reaction: NONE (OFF1, OFF2, OFF3)
Acknowledge: IMMEDIATELY
Cause:
Remedy:

A07504 Drive: Motor data set is not assigned to a drive data set

Message value: %1
Drive object: SERVO_S110-CAN, SERVO_S110-DP, SERVO_S110-PN
Reaction: NONE
Acknowledge: NONE
Cause: A motor data set is not assigned to a drive object.
All of the existing motor data sets in the drive data sets must be assigned using the MDS number (p0186[0...n]). There must be at least as many drive data sets as motor data sets.

Alarm value (r2124, interpret decimal):
Number of the motor data set that has not been assigned.

Remedy: In the drive data sets, assign the non-assigned motor data set using the MDS number (p0186[0...n]).
- check whether all of the motor data sets are assigned to drive data sets.
- if required, delete superfluous motor data sets.
- if required, set up new drive data sets and assign to the corresponding motor data sets.

See also: p0186 (Motor Data Sets (MDS) number)

A07505 EPOS: Travel to fixed stop not possible in the U/f control mode

Message value: %1
Drive object: SERVO_S110-CAN, SERVO_S110-DP, SERVO_S110-PN
Reaction: NONE
Acknowledge: NONE
Cause: The traversing task "travel to fixed stop" is not possible in the U/f control mode.
Alarm value (r2124, interpret decimal):
Number of the traversing block with an illegal task parameter.
See also: p1300 (Open-loop/closed-loop control operating mode), p2621 (EPOS traversing block task)
Remedy: Change the EPOS traversing block task type or change the open-loop/closed-loop control mode.
See also: p1300 (Open-loop/closed-loop control operating mode), p2621 (EPOS traversing block task)

F07509 Drive: Component number missing

Message value: %1
Drive object: SERVO_S110-CAN, SERVO_S110-DP, SERVO_S110-PN
Reaction: OFF2
Acknowledge: IMMEDIATELY
Cause: A Drive Data Set (DDS) is assigned to a Motor Data Set (MDS) or Encoder Data Set (EDS) that does not have a component number.
Alarm value (r2124, interpret decimal):
nnmmmxxyyy
nn: Number of the MDS/EDS.
mmm: Parameter number of the missing component number.
xx: Number of the DDS that is assigned to the MDS/EDS.
yyy: Parameter number that references the MDS/EDS.
Example:
p0186[7] = 5: DDS 7 is assigned MDS 5.
p0131[5] = 0: There is no component number set in MDS 5.
Alarm value = 0513107186
Remedy: In the drive data sets, no longer assign MDS/EDS using p0186, p0187, p0188 or set a valid component number.
See also: p0131 (Motor component number), p0141 (Encoder interface (Sensor Module) component number), p0142 (Encoder component number), p0186 (Motor Data Sets (MDS) number), p0187 (Encoder 1 encoder data set number), p0188 (Encoder 2 encoder data set number)

F07511 Drive: Encoder used a multiple number of times

Message value: %1
Drive object: All objects
Reaction: NONE
Acknowledge: IMMEDIATELY
Cause: Each encoder may only be assigned to one drive and within a drive must - in each drive data set - must always either be encoder 1 or always encoder 2. This unique assignment has been violated.
Fault value (r0949, interpret decimal):
The two parameters in coded form, that refer to the same component number.
First parameter:
Index: First and second decimal place (99 for EDS, not assigned DDS)
Parameter number: Third decimal place (1 for p0187, 2 for p0188, 3 reserved, 4 for EDS not assigned DDS)
Drive number: Fourth and fifth decimal place

Second parameter:
Index: Sixth and seventh decimal place (99 for EDS, not assigned DDS)
Parameter number: eighth decimal place (1 for p0187, 2 for p0188, 3 reserved, 4 for EDS not assigned DDS)
Drive number: Ninth and tenth decimal place
See also: p0141 (Encoder interface (Sensor Module) component number)

Remedy: Correct the double use of a component number using the two parameters coded in the fault value.

A07514 (N) Drive: Data structure does not correspond to the interface module

Message value: -

Drive object: SERVO_S110-CAN, SERVO_S110-DP, SERVO_S110-PN

Reaction: NONE

Acknowledge: NONE

Cause: The interface mode "SIMODRIVE 611 universal" was set (p2038 = 1) and the data structure does not correspond to this mode.
For the data structure, the following rule must be complied with.
Within the group of 8 drive data sets, the assignment to the motor data set must be set the same:
p0186[0] = p0186[1] = ... = p0186[7]
p0186[8] = p0186[9] = ... = p0186[15]
p0186[16] = p0186[17] = ... = p0186[23]
p0186[24] = p0186[25] = ... = p0186[31]
See also: p0180 (Number of Drive Data Sets (DDS)), p0186 (Motor Data Sets (MDS) number), p2038 (IF1 PROFIdrive STW/ZSW interface mode)

Remedy: - structure the data according to the rules of the "SIMODRIVE 611 universal" interface mode.
- check the interface mode (p2038).

Reaction upon N: NONE

Acknowl. upon N: NONE

F07515 Drive: Power unit and motor incorrectly connected

Message value: %1

Drive object: SERVO_S110-CAN, SERVO_S110-DP, SERVO_S110-PN

Reaction: OFF2

Acknowledge: IMMEDIATELY

Cause: A power unit (via PDS) was assigned to a motor (via MDS) in a drive data set that is not connected in the target topology.
Alarm value (r2124, interpret decimal):
Number of the incorrectly parameterized drive data set.

Remedy: - assign the drive data set to a combination of motor and power unit permitted by the target topology.
- adapt the target topology.
See also: p0121 (Power unit component number), p0131 (Motor component number), p0186 (Motor Data Sets (MDS) number)

F07516 Drive: Re-commission the data set

Message value: %1

Drive object: SERVO_S110-CAN, SERVO_S110-DP, SERVO_S110-PN

Reaction: NONE

Acknowledge: IMMEDIATELY

Cause: The assignment between the drive data set and motor data set (p0186) or between the drive data set and the encoder data set was modified (p0187). This is the reason that the drive data set must re-commissioned.
Fault value (r0949, interpret decimal):
Drive data set to be re-commissioned.

Remedy: Commission the drive data set specified in the fault value (r0949).

F07518 Drive: Motor data set changeover incorrectly parameterized

Message value: %1
Drive object: SERVO_S110-CAN, SERVO_S110-DP, SERVO_S110-PN
Reaction: NONE
Acknowledge: IMMEDIATELY
Cause: The system has identified that two motor data sets were incorrectly parameterized.
Parameter r0313 (calculated from p0314, p0310, p0311), r0315 and p1982 may only have different values if the motor data sets are assigned different motors. p0827 is used to assign the motors and/contactors.
It is not possible to toggle between motor data sets.
Alarm value (r2124, interpret hexadecimal):
xxxxyyyy:
xxxx: First DDS with assigned MDS, yyyy: Second DDS with assigned MDS
Remedy: Correct the parameterization of the motor data sets.

A07519 Drive: Motor changeover incorrectly parameterized

Message value: %1
Drive object: SERVO_S110-CAN, SERVO_S110-DP, SERVO_S110-PN
Reaction: NONE
Acknowledge: NONE
Cause: With the setting p0833.0 = 1, a motor changeover via the application is selected. This is the reason that p0827 must have different values in the appropriate motor data set.
Alarm value (r2124, interpret hexadecimal):
xxxxyyyy:
xxxx: First MDS, yyyy: Second MDS
Remedy: - parameterize the appropriate motor data sets differently (p0827).
- select the setting p0833.0 = 0 (motor changeover via the drive).

A07520 Drive: Motor cannot be changed over

Message value: %1
Drive object: SERVO_S110-CAN, SERVO_S110-DP, SERVO_S110-PN
Reaction: NONE
Acknowledge: NONE
Cause: The motor cannot be changed over.
Alarm value (r2124, interpret decimal):
1:
The contactor for the motor that is presently active cannot be opened, because for a synchronous motor, the speed (r0063) is greater than the speed at the start of field weakening (p3048). As long as r0063 > p0348, the current in the motor does not decay in spite of the pulses being suppressed.
2:
The "contactor opened" feedback signal was not detected within 1 s.
3:
The "contactor closed" feedback signal was not detected within 1 s.
Remedy: Re alarm value = 1:
Set the speed lower than the speed at the start of field weakening (r0063 < p0348).
Re alarm value = 2, 3:
Check the feedback signals of the contactor involved.

A07530 Drive: Drive Data Set DDS not present

Message value: -
Drive object: SERVO_S110-CAN, SERVO_S110-DP, SERVO_S110-PN
Reaction: NONE
Acknowledge: NONE
Cause: The selected drive data set is not available (p0837 > p0180). The drive data set was not changed over.
See also: p0180 (Number of Drive Data Sets (DDS)), p0820 (Drive Data Set selection DDS bit 0), r0837 (Drive Data Set DDS selected)

Remedy: - select the existing drive data set.
- set up additional drive data sets.

A07531 Drive: Command Data Set CDS not present

Message value: -
Drive object: All objects
Reaction: NONE
Acknowledge: NONE
Cause: The selected command data set is not available (p0836 > p0170). The command data set was not changed over.
See also: p0810 (Command data set selection CDS bit 0), r0836 (Command Data Set CDS selected)
Remedy: - select the existing command data set.
- set up additional command data sets.

A07541 Drive: Data set changeover not possible

Message value: -
Drive object: SERVO_S110-CAN, SERVO_S110-DP, SERVO_S110-PN
Reaction: NONE
Acknowledge: NONE
Cause: The selected drive data set changeover and the assigned motor changeover are not possible and are not carried out.
For synchronous motors, the motor contactor may only be switched for actual speeds less than the speed at the start of field weakening (r0063 < p0348).
See also: r0063 (Actual speed smoothed), p0348 (Speed at the start of field weakening Vdc = 600 V)
Remedy: Reduce the speed below the speed at the start of field weakening.

F07545 Drive: Pulse encoder interface parameterized incorrectly

Message value: %1
Drive object: SERVO_S110-CAN, SERVO_S110-DP, SERVO_S110-PN
Reaction: OFF2
Acknowledge: IMMEDIATELY
Cause: The pulse encoder interface has been parameterized incorrectly.
Fault value (r0949, interpret decimal):
1:
The encoder type setting for encoder interface 1 or 2 is not the same for all data sets.
Accordingly, the following parameter assignment, for example, would generate a fault:
p0187[0] = 0: Encoder data set 0 is assigned to drive data set 0.
p0187[1] = 1: Encoder data set 1 is assigned to drive data set 1.
p0400[0] = 9000: A value of 9000 (pulse encoder) is set in encoder data set 0.
p0400[1] = 2001: A value of 2001 (sin/cos encoder) is set in encoder data set 1.
2:
The setting in p0400 is not compatible with the telegram selection made in p0922 and p2079.
3:
A second encoder interface can only be used for pulse encoders (p0184 > 0).
Remedy: For fault value = 1:
- make the encoder type setting for encoder interface 1 or 2 the same for all data sets.
For fault value = 2:
- if applicable, do not set parameter p0400 to 9000 or 9001
- if you are using the pulse encoder interface (p0400 = 9000, 9001), set up a free telegram configuration first (p0922 = 999 and p2079 = 999)
For fault value = 3:
- Check the setting for the second encoder interface (p0184).

A07550 (F, N) Drive: Not possible to reset encoder parameters

Message value: %1

Drive object: SERVO_S110-CAN, SERVO_S110-DP, SERVO_S110-PN

Reaction: NONE

Acknowledge: NONE

Cause: When carrying out a factory setting (e.g. using p0970 = 1), it was not possible to reset the encoder parameters. The encoder parameters are directly read out of the encoder via DRIVE-CLiQ.

Alarm value (r2124, interpret decimal):

Component number of the encoder involved.

Remedy: - repeat the operation.

- check the DRIVE-CLiQ connection.

Reaction upon F: NONE (IASC/DCBRAKE, OFF1, OFF2, OFF3, STOP1, STOP2)

Acknowl. upon F: IMMEDIATELY (POWER ON)

Reaction upon N: NONE

Acknowl. upon N: NONE

F07551 Drive encoder: No commutation angle information

Message value: Fault cause: %1, drive data set: %2

Drive object: SERVO_S110-CAN, SERVO_S110-DP, SERVO_S110-PN

Reaction: OFF2 (IASC/DCBRAKE)

Acknowledge: IMMEDIATELY (POWER ON)

Cause: The commutation angle information is missing. This means that synchronous motors cannot be controlled (closed-loop control)

Fault value (r0949, interpret decimal):

yyyyxxxx dec: yyyy = fault cause, xxxx = drive data set

yyyy = 1 dec:

The motor encoder used does not supply an absolute commutation angle.

yyyy = 2 dec:

The selected ratio of the measuring gear does not match the motor pole pair number.

Remedy: Re fault cause = 1:

- check the encoder parameterization (p0404).

- use an encoder with track C/D, EnDat interface of Hall sensors.

- use an encoder with sinusoidal A/B track for which the motor pole pair number (r0313) is an integer multiple of the encoder pulse number (p0408).

- activate the pole position identification routine (p1982 = 1).

Re fault cause = 2:

- the quotient of the pole pair number divided by the ratio of the measuring gear must be an integer number: (p0314 * p0433) / p0432.

Note:

For operation with track C/D, this quotient must be less than 8.

See also: p0404 (Encoder configuration effective), p0432 (Gearbox factor encoder revolutions), p0433 (Gearbox factor motor/load revolutions)

F07552 (A) Drive encoder: Encoder configuration not supported

Message value: Fault cause: %1, component number: %2, encoder data set: %3

Drive object: SERVO_S110-CAN, SERVO_S110-DP, SERVO_S110-PN

Reaction: OFF2 (IASC/DCBRAKE, NONE, OFF1, OFF3, STOP1, STOP2)

Acknowledge: IMMEDIATELY (POWER ON)

Cause: The requested encoder configuration is not supported. Only bits may be requested in p0404 that are signaled as being supported by the encoder evaluation in r0456.

Fault value (r0949, interpret decimal):

ccccbbaa hex: cccc = fault cause, bb = component number, aa = encoder data set

cccc = 1: encoder sin/cos with absolute track (is supported by SME25).

cccc = 3: Squarewave encoder (this is supported by SMC30).

cccc = 4: sin/cos encoder (this is supported by SMC20, SMI20, SME20, SME25).

cccc = 10: DRIVE-CLiQ encoder (is supported by DQI).

cccc = 12: sin/cos encoder with reference mark (this is supported by SME20).
cccc = 15: Commutation with zero mark for separately-excited synchronous motors with VECTORMV.
cccc = 23: Resolver (this is supported by SMC10, SMI10).
cccc = 65535: Other function (compare r0456 and p0404).
See also: p0404 (Encoder configuration effective), r0456 (Encoder configuration supported)

Remedy: - check the encoder parameterization (p0400, p0404).
- use the matching encoder evaluation (r0456).

Reaction upon A: NONE
Acknowl. upon A: NONE

F07553 (A) Drive encoder: Sensor Module configuration not supported

Message value: Encoder data set: %1, first incorrect bit: %2, incorrect parameter: %3
Drive object: SERVO_S110-CAN, SERVO_S110-DP, SERVO_S110-PN
Reaction: OFF2 (IASC/DCBRAKE, NONE, OFF1, OFF3, STOP1, STOP2)
Acknowledge: IMMEDIATELY (POWER ON)
Cause: The Sensor Module does not support the requested configuration.
For incorrect p0430 (cc = 0), the following applies:
- In p0430 (requested functions), at least 1 bit was set that is not set in r0458 (supported functions) (exception: Bit 19, 28, 29, 30, 31).
- p1982 > 0 (pole position identification requested), but r0458.16 = 0 (pole position identification not supported).
For incorrect p0437 (cc = 1), the following applies:
- In p0437 (requested functions), at least 1 bit was set that is not set in r0459 (supported functions).
Fault value (r0949, interpret hexadecimal):
ddccbbaa hex
aa: encoder data set number
bb: first incorrect bit
cc: incorrect parameter
cc = 0: incorrect parameter is p0430
cc = 1: incorrect parameter is p0437
cc = 2: incorrect parameter is r0459
dd: reserved (always 0)

Remedy: - check the encoder parameterization (p0430, p0437).
- check the pole position identification routine (p1982).
- use the matching encoder evaluation (r0458, r0459).
See also: p0430 (Sensor Module configuration), p0437 (Sensor Module configuration extended), r0458 (Sensor Module properties), r0459 (Sensor Module properties extended), p1982 (PolID selection)

Reaction upon A: NONE
Acknowl. upon A: NONE

F07555 (A) Drive encoder: Configuration position tracking

Message value: Component number: %1, encoder data set: %2, drive data set: %3, fault cause: %4
Drive object: SERVO_S110-CAN, SERVO_S110-DP, SERVO_S110-PN
Reaction: OFF2 (IASC/DCBRAKE, NONE, OFF1, OFF3, STOP1, STOP2)
Acknowledge: IMMEDIATELY (POWER ON)
Cause: For position tracking, the configuration is not supported.
Position tracking can only be activated for absolute encoders.
For linear axes, it is not possible to simultaneously activate the position tracking for load and measuring gears.
Fault value (r0949, interpret hexadecimal):
ddccbbaa hex
aa = encoder data set
bb = component number
cc = drive data set
dd = fault cause
dd = 00 hex = 0 dec
An absolute encoder is not being used.

dd = 01 hex = 1 dec
Position tracking cannot be activated because the memory of the internal NVRAM is not sufficient or a Control Unit does not have an NVRAM.
dd = 02 hex = 2 dec
For a linear axis, the position tracking was activated for the load and measuring gear.
dd = 03 hex = 3 dec
Position tracking cannot be activated because position tracking with another gear ratio, axis type or tolerance window has already been detected for this encoder data set.
dd = 04 hex = 4 dec
A linear encoder is being used.
See also: p0404 (Encoder configuration effective)

Remedy: - use an absolute encoder.
- if necessary, de-select the position tracking (p0411 for the measuring gear, p2720 for the load gear).
- use a Control Unit with sufficient NVRAM.
- Only activate position tracking of the load gear in the same encoder data set if the gear ratio (p2504, p2505), axis type (p2720.1) and tolerance window (p2722) are also the same.

Reaction upon A: NONE
Acknowl. upon A: NONE

A07557 (F) Encoder 1: Reference point coordinate not in the permissible range

Message value: %1
Drive object: SERVO_S110-CAN, SERVO_S110-DP, SERVO_S110-PN
Reaction: NONE
Acknowledge: NONE
Cause: The reference point coordinate received when adjusting the encoder via connector input CI:p2599 lies outside the half of the encoder range and cannot be set as actual axis position. The maximum permissible value is displayed in the supplementary information.
Remedy: Set the reference point coordinate less than the value from the supplementary information.
See also: p2598 (EPOS reference point coordinate signal source)
Reaction upon F: OFF1 (OFF2, OFF3)
Acknowl. upon F: IMMEDIATELY

A07558 (F) Encoder 2: Reference point coordinate not in the permissible range

Message value: %1
Drive object: SERVO_S110-CAN, SERVO_S110-DP, SERVO_S110-PN
Reaction: NONE
Acknowledge: NONE
Cause: The reference point coordinate received when adjusting the encoder via connector input CI:p2599 lies outside the half of the encoder range and cannot be set as actual axis position. The maximum permissible value is displayed in the supplementary information.
Remedy: Set the reference point coordinate less than the value from the supplementary information.
See also: p2598 (EPOS reference point coordinate signal source)
Reaction upon F: OFF1 (OFF2, OFF3)
Acknowl. upon F: IMMEDIATELY

F07560 Drive encoder: Number of pulses is not to the power of two

Message value: Encoder data set: %1
Drive object: SERVO_S110-CAN, SERVO_S110-DP, SERVO_S110-PN
Reaction: OFF2 (IASC/DCBRAKE, NONE, OFF1, OFF3, STOP1, STOP2)
Acknowledge: IMMEDIATELY (POWER ON)
Cause: For rotary absolute encoders, the pulse number in p0408 must be to the power of two.
Fault value (r0949, interpret decimal):
The fault value includes the encoder data set number involved.
Remedy: - check the parameterization (p0408, p0404.1, r0458.5).
- upgrade the Sensor Module firmware if necessary

F07561 Drive encoder: Number of multiturn pulses is not to the power of two

Message value: Encoder data set: %1
Drive object: SERVO_S110-CAN, SERVO_S110-DP, SERVO_S110-PN
Reaction: OFF2 (IASC/DCBRAKE, NONE, OFF1, OFF3, STOP1, STOP2)
Acknowledge: IMMEDIATELY (POWER ON)
Cause: The multiturn resolution in p0421 must be to the power of two.
Fault value (r0949, interpret decimal):
The fault value includes the encoder data set number involved.
Remedy: - check the parameterization (p0421, p0404.1, r0458.5).
- upgrade the Sensor Module firmware if necessary

F07562 (A) Drive, encoder: Position tracking, incremental encoder not possible

Message value: Fault cause: %1, component number: %2, encoder data set: %3
Drive object: SERVO_S110-CAN, SERVO_S110-DP, SERVO_S110-PN
Reaction: OFF2 (IASC/DCBRAKE, NONE, OFF1, OFF3, STOP1, STOP2)
Acknowledge: IMMEDIATELY (POWER ON)
Cause: The requested position tracking for incremental encoders is not supported.
Fault value (r0949, interpret hexadecimal):
ccccbbaa hex
aa = encoder data set
bb = component number
cccc = fault cause
cccc = 00 hex = 0 dec
The encoder type does not support the "Position tracking incremental encoder" function.
cccc = 01 hex = 1 dec
Position tracking cannot be activated because the memory of the internal NVRAM is not sufficient or a Control Unit does not have an NVRAM.
cccc = 04 hex = 4 dec
A linear encoder is used that does not support the "position tracking" function.
See also: p0404 (Encoder configuration effective), r0456 (Encoder configuration supported)
Remedy: - check the encoder parameterization (p0400, p0404).
- use a Control Unit with sufficient NVRAM.
- if required, de-select position tracking for the incremental encoder (p0411.3 = 0).
Reaction upon A: NONE
Acknowl. upon A: NONE

A07565 (F, N) Drive: Encoder error in PROFIdrive encoder interface 1

Message value: %1
Drive object: SERVO_S110-CAN, SERVO_S110-DP, SERVO_S110-PN
Reaction: NONE
Acknowledge: NONE
Cause: An encoder error was signaled for encoder 1 via the PROFIdrive encoder interface (G1_ZSW.15).
Alarm value (r2124, interpret decimal):
Error code from G1_XIST2, refer to the description regarding r0483.
Note:
This alarm is only output if p0480[0] is not equal to zero.
Remedy: Acknowledge the encoder error using the encoder control word (G1_STW.15 = 1).
Reaction upon F: NONE (OFF1, OFF2, OFF3)
Acknowl. upon F: IMMEDIATELY
Reaction upon N: NONE
Acknowl. upon N: NONE

A07566 (F, N) Drive: Encoder error in PROFIdrive encoder interface 2

Message value: %1
Drive object: SERVO_S110-CAN, SERVO_S110-DP, SERVO_S110-PN
Reaction: NONE
Acknowledge: NONE
Cause: An encoder error was signaled for encoder 2 via the PROFIdrive encoder interface (G2_ZSW.15).
Alarm value (r2124, interpret decimal):
Error code from G2_XIST2, refer to the description regarding r0483.
Note:
This alarm is only output if p0480[1] is not equal to zero.
Remedy: Acknowledge the encoder error using the encoder control word (G2_STW.15 = 1).
Reaction upon F: NONE (OFF1, OFF2, OFF3)
Acknowl. upon F: IMMEDIATELY
Reaction upon N: NONE
Acknowl. upon N: NONE

A07569 (F) Encoder could not be identified

Message value: -
Drive object: SERVO_S110-CAN, SERVO_S110-DP, SERVO_S110-PN
Reaction: NONE
Acknowledge: NONE
Cause: During encoder identification (waiting) with p0400 = 10100, the encoder could not be identified.
Either the wrong encoder has been installed or no encoder has been installed, the wrong encoder cable has been connected or no encoder cable has been connected to the Sensor Module, or the DRIVE-CLiQ component has not been connected to DRIVE-CLiQ.
Note:
Encoder identification must be supported by the encoder and is possible in the following cases:
- Encoder with EnDat interface
- Motor with DRIVE-CLiQ
Remedy: - check and, if necessary, connect the encoder and/or encoder cable.
- check and, if necessary, establish the DRIVE-CLiQ connection.
- in the case of encoders that cannot be identified (e.g. encoders without EnDat interface), the correct encoder type must be entered in p0400.
Reaction upon F: NONE (OFF1, OFF2, OFF3)
Acknowl. upon F: IMMEDIATELY

F07575 Drive: Motor encoder not ready

Message value: -
Drive object: SERVO_S110-CAN, SERVO_S110-DP, SERVO_S110-PN
Reaction: OFF2 (ENCODER)
Acknowledge: IMMEDIATELY
Cause: The motor encoder signals that it is not ready.
- initialization of encoder 1 (motor encoder) was unsuccessful.
- the function "parking encoder" is active (encoder control word G1_STW.14 = 1).
- the encoder interface (Sensor Module) is de-activated (p0145).
- the Sensor Module is defective.
Remedy: Evaluate other queued faults via encoder 1.

A07576 Drive: Encoderless operation due to a fault active

Message value: -
Drive object: SERVO_S110-CAN, SERVO_S110-DP, SERVO_S110-PN
Reaction: NONE
Acknowledge: NONE
Cause: Encoderless operation is active due to a fault (r1407.13 = 1).

Note:
The behavior for faults has been set to ENCODER fault response in p0491.
See also: p0491 (Motor encoder fault response ENCODER)

Remedy:
- remove the cause of a possible encoder fault.
- carry out a POWER ON (power off/on) for all components.

A07577 (F) Encoder 1: Measuring probe evaluation not possible

Message value: %1
Drive object: SERVO_S110-CAN, SERVO_S110-DP, SERVO_S110-PN
Reaction: NONE
Acknowledge: NONE
Cause: When evaluating the measuring probe, an error occurred.
Alarm value (r2124, interpret decimal):
6: The input terminal for the measuring probe is not set.
4098: Error when initializing the measuring probe.
4100: The measuring pulse frequency is too high.
4200: The PROFIBUS clock cycle is not a multiple of integer of the position controller clock cycle.
Remedy: De-activate the measuring probe evaluation (BI: p2509 = 0 signal).
Re alarm value = 6:
Set the input terminal for the measuring probe (p0488, p0489 or p2517, p2518).
Re alarm value = 4098:
Check the Control Unit hardware.
Re alarm value = 4100:
Reduce the frequency of the measuring pulses at the measuring probe.
Re alarm value = 4200:
Set the clock cycle ratio between the PROFIBUS clock cycle and the position controller clock cycle to an integer multiple.
Reaction upon F: OFF1
Acknowl. upon F: IMMEDIATELY

A07578 (F) Encoder 2: Measuring probe evaluation not possible

Message value: %1
Drive object: SERVO_S110-CAN, SERVO_S110-DP, SERVO_S110-PN
Reaction: NONE
Acknowledge: NONE
Cause: When evaluating the measuring probe, an error occurred.
Alarm value (r2124, interpret decimal):
6: The input terminal for the measuring probe is not set.
4098: Error when initializing the measuring probe.
4100: The measuring pulse frequency is too high.
4200: The PROFIBUS clock cycle is not a multiple of integer of the position controller clock cycle.
Remedy: De-activate the measuring probe evaluation (BI: p2509 = 0 signal).
Re alarm value = 6:
Set the input terminal for the measuring probe (p0488, p0489 or p2517, p2518).
Re alarm value = 4098:
Check the Control Unit hardware.
Re alarm value = 4100:
Reduce the frequency of the measuring pulses at the measuring probe.
Re alarm value = 4200:
Set the clock cycle ratio between the PROFIBUS clock cycle and the position controller clock cycle to an integer multiple.
Reaction upon F: OFF1
Acknowl. upon F: IMMEDIATELY

A07580 (F, N) Drive: No Sensor Module with matching component number

Message value: Encoder data set: %1
Drive object: SERVO_S110-CAN, SERVO_S110-DP, SERVO_S110-PN
Reaction: NONE
Acknowledge: NONE
Cause: A Sensor Module with the component number specified in p0141 was not found.
Alarm value (r2124, interpret decimal):
Encoder data set involved (index of p0141).
Remedy: Correct parameter p0141.
Reaction upon F: OFF1 (IASC/DCBRAKE, NONE, OFF2, OFF3, STOP1, STOP2)
Acknowl. upon F: IMMEDIATELY (POWER ON)
Reaction upon N: NONE
Acknowl. upon N: NONE

A07581 (F) Encoder 1: Position actual value preprocessing error

Message value: -
Drive object: SERVO_S110-CAN, SERVO_S110-DP, SERVO_S110-PN
Reaction: NONE
Acknowledge: NONE
Cause: An error has occurred during the position actual value preprocessing.
Remedy: Check the encoder for the position actual value preprocessing.
See also: p2502 (LR encoder assignment)
Reaction upon F: OFF1 (OFF2, OFF3)
Acknowl. upon F: IMMEDIATELY

A07582 (F) Encoder 2: Position actual value preprocessing error

Message value: -
Drive object: SERVO_S110-CAN, SERVO_S110-DP, SERVO_S110-PN
Reaction: NONE
Acknowledge: NONE
Cause: An error has occurred during the position actual value preprocessing.
Remedy: Check the encoder for the position actual value preprocessing.
See also: p2502 (LR encoder assignment)
Reaction upon F: OFF1 (OFF2, OFF3)
Acknowl. upon F: IMMEDIATELY

A07584 Encoder 1: Position setting value activated

Message value: -
Drive object: SERVO_S110-CAN, SERVO_S110-DP, SERVO_S110-PN
Reaction: NONE
Acknowledge: NONE
Cause: The position actual value is set to the value received via CI: p2515while BI: p2514 = 1 signal. A possible system deviation cannot be corrected.
Remedy: Not necessary.
The alarm automatically disappears with BI: p2514 = 0 signal.

A07585 Encoder 2: Position setting value activated

Message value: -
Drive object: SERVO_S110-CAN, SERVO_S110-DP, SERVO_S110-PN
Reaction: NONE
Acknowledge: NONE
Cause: The position actual value is set to the value received via CI: p2515while BI: p2514 = 1 signal. A possible system deviation cannot be corrected.
Remedy: Not necessary.
The alarm automatically disappears with BI: p2514 = 0 signal.

A07587 Encoder 1: Position actual value preprocessing does not have a valid encoder

Message value: -
Drive object: SERVO_S110-CAN, SERVO_S110-DP, SERVO_S110-PN
Reaction: NONE
Acknowledge: NONE
Cause: The following problem has occurred during the position actual value preprocessing.
- an encoder data set has been assigned, however, the encoder data set does not contain any encoder data (p0400 = 0) or invalid data (e.g. p0408 = 0).
Remedy: Check the drive data sets, encoder data sets.
See also: p0187 (Encoder 1 encoder data set number), p0188 (Encoder 2 encoder data set number), p0400 (Encoder type selection), p2502 (LR encoder assignment)

A07588 Encoder 2: Position actual value preprocessing does not have a valid encoder

Message value: -
Drive object: SERVO_S110-CAN, SERVO_S110-DP, SERVO_S110-PN
Reaction: NONE
Acknowledge: NONE
Cause: The following problem has occurred during the position actual value preprocessing.
- an encoder data set has been assigned, however, the encoder data set does not contain any encoder data (p0400 = 0) or invalid data (e.g. p0408 = 0).
Remedy: Check the drive data sets, encoder data sets.
See also: p0187 (Encoder 1 encoder data set number), p0188 (Encoder 2 encoder data set number), p0400 (Encoder type selection), p2502 (LR encoder assignment)

A07590 (F) Encoder 1: Drive Data Set changeover in operation

Message value: -
Drive object: SERVO_S110-CAN, SERVO_S110-DP, SERVO_S110-PN
Reaction: NONE
Acknowledge: NONE
Cause: A Drive Data Set changeover (DDS) with a change of the mechanical relationships and the encoder assignment (p2502) was requested in operation.
Remedy: To changeover the drive data set, initially, exit the "operation" mode.
Reaction upon F: OFF1 (OFF2, OFF3)
Acknowl. upon F: IMMEDIATELY

A07591 (F) Encoder 2: Drive Data Set changeover in operation

Message value: -
Drive object: SERVO_S110-CAN, SERVO_S110-DP, SERVO_S110-PN
Reaction: NONE
Acknowledge: NONE
Cause: A Drive Data Set changeover (DDS) with a change of the mechanical relationships and the encoder assignment (p2502) was requested in operation.
Remedy: To changeover the drive data set, initially, exit the "operation" mode.
Reaction upon F: OFF1 (OFF2, OFF3)
Acknowl. upon F: IMMEDIATELY

A07593 (F, N) Encoder 1: Value range for position actual value exceeded

Message value: %1
Drive object: SERVO_S110-CAN, SERVO_S110-DP, SERVO_S110-PN
Reaction: NONE
Acknowledge: NONE
Cause: The value range (-2147483648 ... 2147483647) for the position actual value representation was exceeded.
When the overflow occurs, the "referenced" or "adjustment absolute measuring system" status is reset.

Fault value (r0949, interpret decimal):
1: The position actual value (r2521) has exceeded the value range.
2: The encoder position actual value Gn_XIST2 (r0483) or the absolute value after the load gear (r2723) has exceeded the value range.
3: The maximum encoder value times the factor to convert the absolute position (r0483 and/or r2723) from increments to length units (LU) has exceeded the value range for displaying the position actual value.

Remedy: If required, reduce the traversing range or position resolution.
Re alarm value = 3:
Reducing the position resolution and conversion factor:
- reduce the length unit (LU) per load revolution for rotary encoders (p2506).
- increase the fine resolution of absolute position actual values (p0419).

Reaction upon F: OFF1 (OFF2, OFF3)
Acknowl. upon F: IMMEDIATELY
Reaction upon N: NONE
Acknowl. upon N: NONE

A07594 (F, N) Encoder 2: Value range for position actual value exceeded

Message value: %1
Drive object: SERVO_S110-CAN, SERVO_S110-DP, SERVO_S110-PN
Reaction: NONE
Acknowledge: NONE
Cause: The value range (-2147483648 ... 2147483647) for the position actual value representation was exceeded.
When the overflow occurs, the "referenced" or "adjustment absolute measuring system" status is reset.
Fault value (r0949, interpret decimal):
1: The position actual value (r2521) has exceeded the value range.
2: The encoder position actual value Gn_XIST2 (r0483) or the absolute value after the load gear (r2723) has exceeded the value range.
3: The maximum encoder value times the factor to convert the absolute position (r0483 and/or r2723) from increments to length units (LU) has exceeded the value range for displaying the position actual value.
Remedy: If required, reduce the traversing range or position resolution.
Re alarm value = 3:
Reducing the position resolution and conversion factor:
- reduce the length unit (LU) per load revolution for rotary encoders (p2506).
- increase the fine resolution of absolute position actual values (p0419).

Reaction upon F: OFF1 (OFF2, OFF3)
Acknowl. upon F: IMMEDIATELY
Reaction upon N: NONE
Acknowl. upon N: NONE

A07596 (F) Encoder 1: Reference function interrupted

Message value: -
Drive object: SERVO_S110-CAN, SERVO_S110-DP, SERVO_S110-PN
Reaction: NONE
Acknowledge: NONE
Cause: An activated reference function (reference mark search or measuring probe evaluation) was interrupted.
- an encoder fault has occurred (Gn_ZSW.15 = 1).
- position actual value was set during an activated reference function.
- simultaneously activate reference mark search and measuring probe evaluation (BI: p2508 and BI: p2509 = 1 signal).
- activated reference function (reference mark search or measuring probe evaluation) was de-activated (BI: p2508 and BI: p2509 = 0 signal).

Remedy: - check the causes and resolve.
- reset the control (BI: p2508 and BI: p2509 = 0 signal) and activate the requested function.

Reaction upon F: OFF1 (OFF2, OFF3)
Acknowl. upon F: IMMEDIATELY

A07597 (F) Encoder 2: Reference function interrupted

Message value: -

Drive object: SERVO_S110-CAN, SERVO_S110-DP, SERVO_S110-PN

Reaction: NONE

Acknowledge: NONE

Cause: An activated reference function (reference mark search or measuring probe evaluation) was interrupted.
- an encoder fault has occurred (Gn_ZSW.15 = 1).
- position actual value was set during an activated reference function.
- simultaneously activate reference mark search and measuring probe evaluation (BI: p2508 and BI: p2509 = 1 signal).
- activated reference function (reference mark search or measuring probe evaluation) was de-activated (BI: p2508 and BI: p2509 = 0 signal).

Remedy:
- check the causes and resolve.
- reset the control (BI: p2508 and BI: p2509 = 0 signal) and activate the requested function.

Reaction upon F: OFF1 (OFF2, OFF3)

Acknowl. upon F: IMMEDIATELY

F07599 (A) Encoder 1: Adjustment not possible

Message value: Drive data set: %1

Drive object: SERVO_S110-CAN, SERVO_S110-DP, SERVO_S110-PN

Reaction: OFF1 (NONE, OFF2, OFF3)

Acknowledge: IMMEDIATELY

Cause: The maximum encoder value times the factor to convert the absolute position (r0483 and/or r2723) from increments to length units (LU) has exceeded the value range (-2147483648 ... 2147483647) for displaying the position actual value.

Remedy: If the value for the maximum possible absolute position (LU) is greater than 4294967296, then it is not possible to make an adjustment due to an overflow.

For rotary encoders, the maximum possible absolute position (LU) is calculated as follows:

1. Motor encoder without position tracking:

p2506 * p0433 * p2505 / (p0432 * p2504)

p2506 * p0433 * p2505 * p0421 / (p0432 * p2504) for multiturn encoders

2. Motor encoder with position tracking for measuring gear:

p2506 * p0412 * p2505 / p2504

3. Motor encoder with position tracking for load gear:

p2506 * p2721 * p0433 / p0432

4. Motor encoder with position tracking for load and measuring gear:

p2506 * p2721

5. Direct encoder without position tracking:

p2506 * p0433 / p0432

p2506 * p0433 * p0421 / p0432 for multiturn encoders

6. Direct encoder with position tracking for measuring gear:

p2506 * p0412

Reaction upon A: NONE

Acknowl. upon A: NONE

F07600 (A) Encoder 2: Adjustment not possible

Message value: Drive data set: %1

Drive object: SERVO_S110-CAN, SERVO_S110-DP, SERVO_S110-PN

Reaction: OFF1 (NONE, OFF2, OFF3)

Acknowledge: IMMEDIATELY

Cause: The maximum encoder value times the factor to convert the absolute position (r0483 and/or r2723) from increments to length units (LU) has exceeded the value range (-2147483648 ... 2147483647) for displaying the position actual value.

Remedy: If the value for the maximum possible absolute position (LU) is greater than 4294967296, then it is not possible to make an adjustment due to an overflow.
For rotary encoders, the maximum possible absolute position (LU) is calculated as follows:
1. Motor encoder without position tracking:
p2506 * p0433 * p2505 / (p0432 * p2504)
p2506 * p0433 * p2505 * p0421 / (p0432 * p2504) for multiturn encoders
2. Motor encoder with position tracking for measuring gear:
p2506 * p0412 * p2505 / p2504
3. Motor encoder with position tracking for load gear:
p2506 * p2721 * p0433 / p0432
4. Motor encoder with position tracking for load and measuring gear:
p2506 * p2721
5. Direct encoder without position tracking:
p2506 * p0433 / p0432
p2506 * p0433 * p0421 / p0432 for multiturn encoders
6. Direct encoder with position tracking for measuring gear:
p2506 * p0412
Reaction upon A: NONE
Acknowl. upon A: NONE

F07800 Drive: No power unit present

Message value: -
Drive object: SERVO_S110-CAN, SERVO_S110-DP, SERVO_S110-PN
Reaction: NONE
Acknowledge: IMMEDIATELY
Cause: The power unit parameters cannot be read or no parameters are stored in the power unit.
Connection between Control Unit and power unit was interrupted or is defective.
Note:
This fault also occurs if an incorrect topology was selected in the commissioning software and this parameterization is then downloaded to the Control Unit.
See also: r0200 (Power unit code number actual)
Remedy: - connect the data line to power unit and restart the CU (POWER ON).
- check or replace the CU.
- Check the cable between the CU and power unit.
- after correcting the topology, the parameters must be again downloaded using the commissioning software.

F07801 Drive: Motor overcurrent

Message value: -
Drive object: SERVO_S110-CAN, SERVO_S110-DP, SERVO_S110-PN
Reaction: OFF2 (NONE, OFF1, OFF3)
Acknowledge: IMMEDIATELY
Cause: The permissible motor limit current was exceeded.
- effective current limit set too low.
- current controller not correctly set.
- motor was braked with an excessively high stall torque correction factor.
- U/f operation: Up ramp was set too short or the load is too high.
- U/f operation: Short-circuit in the motor cable or ground fault.
- U/f operation: Motor current does not match the current of Motor Module.
Note:
Synchronous motor: Limit current= 1.3 x p0323
Induction motor: Limit current= 1.3 x r0209

Remedy: - check the current limits (p0323, p0640).
- check the current controller (p1715, p1717).
- reduce the stall torque correction factor (p0326).
- increase the up ramp (p1318) or reduce the load.
- check the motor and motor cables for short-circuit and ground fault.
- check the Motor Module and motor combination.

F07802 Drive: Infeed or power unit not ready

Message value: -
Drive object: SERVO_S110-CAN, SERVO_S110-DP, SERVO_S110-PN
Reaction: OFF2 (NONE)
Acknowledge: IMMEDIATELY
Cause: After an internal power-on command, the infeed or drive does not signal ready.
- monitoring time is too short.
- DC link voltage is not present.
- associated infeed or drive of the signaling component is defective.
- supply voltage incorrectly set.

Remedy: - increase the monitoring time (p0857).
- ensure that there is a DC link voltage. Check the DC link busbar. Enable the infeed.
- replace the associated infeed or drive of the signaling component.
- check the line supply voltage setting (p0210).

See also: p0857 (Power unit monitoring time)

A07805 (N) Drive: Power unit overload I2t

Message value: -
Drive object: SERVO_S110-CAN, SERVO_S110-DP, SERVO_S110-PN
Reaction: NONE
Acknowledge: NONE
Cause: Alarm threshold for I2t overload (p0294) of the power unit exceeded.
The response parameterized in p0290 becomes active.
See also: p0290 (Power unit overload response)
Remedy: - reduce the continuous load.
- adapt the load duty cycle.
- check the assignment of the rated currents of the motor and Motor Module.

Reaction upon N: NONE
Acknowl. upon N: NONE

F07810 Drive: Power unit EEPROM without rated data

Message value: -
Drive object: SERVO_S110-CAN, SERVO_S110-DP, SERVO_S110-PN
Reaction: NONE
Acknowledge: IMMEDIATELY
Cause: No rated data are stored in the power unit EEPROM.
See also: r0206 (Rated power unit power), r0207 (Rated power unit current), r0208 (Rated power unit line supply voltage), r0209 (Power unit maximum current)
Remedy: Replace the power unit or inform Siemens Customer Service.

F07815 Drive: Power unit has been changed

Message value: Parameter: %1
Drive object: SERVO_S110-CAN, SERVO_S110-DP, SERVO_S110-PN
Reaction: NONE
Acknowledge: IMMEDIATELY
Cause: The code number of the actual power unit does not match the saved number. This only occurs if the comparator in p9906 or p9908 is not at 2 (low) or 3 (minimum).

Fault value (r0949, interpret decimal):
Number of the incorrect parameter.
See also: r0200 (Power unit code number actual), p0201 (Power unit code number)

Remedy: Connect the original power unit and power up the Control Unit again (POWER ON) or set p0201 to r0200 and exit commissioning with p0010 = 0.
For infeeds, the following applies:
Line reactors or line filters must be used that are specified for the new power unit. A line supply and DC link identification routine (p3410 = 5) must then be carried out. It is not possible to change the power unit without re-commissioning the system if the type of infeed (A_Infeed, B_Infeed, S_Infeed), the type of construction/design (booksize, chassis) or the voltage class differ between the old and new power units.
For inverters, the following applies:
If the new power unit is accepted, then if required, the current limit (p0640) can be reduced by a lower maximum current of the power unit (r0209) (torque limits stay the same).
If not only the power unit is changed, but also the motor, then the motor must be re-commissioned (e.g. using p0010 = 1). This is also necessary if motor data is still to be downloaded via DRIVE-CLiQ.
If the comparison stage in p9906 is set to 2, 3, then commissioning can be exited (p0010 = 0) and the fault acknowledged.
See also: r0200 (Power unit code number actual)

A07820 Drive: Temperature sensor not connected

Message value: %1
Drive object: SERVO_S110-CAN, SERVO_S110-DP, SERVO_S110-PN
Reaction: NONE
Acknowledge: NONE
Cause: The temperature sensor for monitoring the motor temperature, specified in p0600, is not available.
Alarm value (r2124, interpret decimal):
1: p0601 = 10 (SME), but in p0600 - not evaluated via encoder is selected.
2: p0600 = 10 (BICO), but the signal source (p0603) is not interconnected.
3: p0601 = 11 (BICO), but in p0600 - not evaluated via BICO interconnection is selected (20 or 21).
4: p0601 = 11 (BICO) and p4610-p4613 > 0, but the associated signal source (p0608, p0609) is not interconnected.
5: Component with sensor evaluation not present or has been removed in the meantime.
6: Evaluation via Motor Module not possible (r0192.21).
Remedy: Re alarm value = 1:
- In p0600 set an encoder with temperature sensor.
Re alarm value = 2:
- interconnect p0603 with the temperature signal.
Re alarm value = 3, 4:
- set the available temperature sensor (p0600, p0601).
- set p4610 ... p4613 = 0 (no sensor), or interconnect p0608 or p0609 with an external temperature signal.
Re alarm value = 5:
- connect the component with the temperature sensor. Check the DRIVE-CLiQ connection.
Re alarm value = 6:
- update the Motor Module firmware. Connect temperature sensor via encoder.
See also: p0600 (Motor temperature sensor for monitoring), p0601 (Motor temperature sensor type)

A07850 (F) External alarm 1

Message value: -
Drive object: All objects
Reaction: NONE
Acknowledge: NONE
Cause: The BICO signal for "external alarm 1" was triggered.
The condition for this external alarm is fulfilled.
See also: p2112 (External alarm 1)
Remedy: Eliminate the causes of this alarm.
Reaction upon F: NONE (IASC/DCBRAKE, OFF1, OFF2, OFF3, STOP1, STOP2)
Acknowl. upon F: IMMEDIATELY (POWER ON)

A07851 (F) External alarm 2

Message value: -
Drive object: All objects
Reaction: NONE
Acknowledge: NONE
Cause: The BICO signal for "external alarm 2" was triggered.
The condition for this external alarm is fulfilled.
See also: p2116 (External alarm 2)
Remedy: Eliminate the causes of this alarm.
Reaction upon F: NONE (IASC/DCBRAKE, OFF1, OFF2, OFF3, STOP1, STOP2)
Acknowl. upon F: IMMEDIATELY (POWER ON)

A07852 (F) External alarm 3

Message value: -
Drive object: All objects
Reaction: NONE
Acknowledge: NONE
Cause: The BICO signal for "external alarm 3" was triggered.
The condition for this external alarm is fulfilled.
See also: p2117 (External alarm 3)
Remedy: Eliminate the causes of this alarm.
Reaction upon F: NONE (IASC/DCBRAKE, OFF1, OFF2, OFF3, STOP1, STOP2)
Acknowl. upon F: IMMEDIATELY (POWER ON)

F07860 (A) External fault 1

Message value: -
Drive object: All objects
Reaction: OFF2 (IASC/DCBRAKE, NONE, OFF1, OFF3, STOP1, STOP2)
Acknowledge: IMMEDIATELY (POWER ON)
Cause: The BICO signal "external fault 1" was triggered.
See also: p2106 (External fault 1)
Remedy: Eliminate the causes of this fault.
Reaction upon A: NONE
Acknowl. upon A: NONE

F07861 (A) External fault 2

Message value: -
Drive object: All objects
Reaction: OFF2 (IASC/DCBRAKE, NONE, OFF1, OFF3, STOP1, STOP2)
Acknowledge: IMMEDIATELY (POWER ON)
Cause: The BICO signal "external fault 2" was triggered.
See also: p2107 (External fault 2)
Remedy: Eliminate the causes of this fault.
Reaction upon A: NONE
Acknowl. upon A: NONE

F07862 (A) External fault 3

Message value: -
Drive object: All objects
Reaction: OFF2 (IASC/DCBRAKE, NONE, OFF1, OFF3, STOP1, STOP2)
Acknowledge: IMMEDIATELY (POWER ON)
Cause: The BICO signal "external fault 3" was triggered.
See also: p2108 (External fault 3)
Remedy: Eliminate the causes of this fault.

Reaction upon A: NONE
Acknowl. upon A: NONE

F07890 Internal voltage protection / internal armature short-circuit with STO active

Message value: -
Drive object: SERVO_S110-CAN, SERVO_S110-DP, SERVO_S110-PN
Reaction: OFF2
Acknowledge: IMMEDIATELY
Cause: The internal armature short-circuit (p1231 = 4) is not possible as Safe Torque Off (STO) is enabled. The pulses cannot be enabled.
Remedy: Switch out the internal armature short-circuit (p1231=0) or de-activate Safe Torque Off (p9501 = p9561 = 0).
Note:
STO: Safe Torque Off / SH: Safe standstill

F07900 (N, A) Drive: Motor blocked/speed controller at its limit

Message value: -
Drive object: SERVO_S110-CAN, SERVO_S110-DP, SERVO_S110-PN
Reaction: OFF2 (NONE, OFF1, OFF3, STOP1, STOP2)
Acknowledge: IMMEDIATELY
Cause: Motor has been operating at the torque limit longer than the time specified in p2177 and below the speed threshold in p2175.
This signal can also be initiated if the speed actual value is oscillating and the speed controller output repeatedly goes to its limit.
See also: p2175 (Motor blocked speed threshold), p2177 (Motor blocked delay time)
Remedy: - check that the motor can rotate freely.
- check the torque limit: For a positive direction of rotation r1538, for a negative direction of rotation r1539.
- check the parameter, message "Motor blocked" and if required, correct (p2175, p2177).
- check the inversion of the actual value (p0410).
- check the motor encoder connection.
- check the encoder pulse number (p0408).
- for SERVO with encoderless operation and motors with low power ratings (< 300 W), increase the pulse frequency (p1800).
- after de-selecting the "Basic positioner" (EPOS) function mode, check the motoring (p1528) and regenerative (p1529) torque limit and modify again.
Reaction upon N: NONE
Acknowl. upon N: NONE
Reaction upon A: NONE
Acknowl. upon A: NONE

F07901 Drive: Motor overspeed

Message value: -
Drive object: SERVO_S110-CAN, SERVO_S110-DP, SERVO_S110-PN
Reaction: OFF2 (IASC/DCBRAKE)
Acknowledge: IMMEDIATELY
Cause: The maximum permissible speed was either positively or negatively exceeded.
The maximum permissible positive speed is formed as follows: Minimum (p1082, CI: p1085) + p2162
The maximum permissible negative speed is formed as follows: Maximum (-p1082, CI: 1088) - p2162
Remedy: The following applies for a positive direction of rotation:
- check r1084 and if required, correct p1082, CI:p1085 and p2162.
The following applies for a negative direction of rotation:
- check r1087 and if required, correct p1082, CI:p1088 and p2162.

F07902 (N, A) Drive: Motor stalled

Message value: %1

Drive object: SERVO_S110-CAN, SERVO_S110-DP, SERVO_S110-PN

Reaction: OFF2 (IASC/DCBRAKE, NONE, OFF1, OFF3, STOP1, STOP2)

Acknowledge: IMMEDIATELY

Cause: For a vector drive the system has identified that the motor has stall for a time longer than is set in p2178.

Fault value (r0949, interpret decimal):

1: Stall detection using r1408.11 (p1744 or p0492).

2: Stall detection using r1408.12 (p1745).

3: Stall detection using r0056.11 (only for separately excited synchronous motors).

Remedy: For closed-loop speed and torque control with speed encoder, the following applies:

- check the speed signal (interrupted cable, polarity, pulse number, broken encoder shaft).
- check the speed encoder, if another speed encoder was selected using the data set changeover. This must be connected to the same motor that is controlled for the data set changeover.

If there is no fault, then the fault tolerance (p1744 and p0492) can be increased.

For closed-loop speed and torque control without speed encoder, the following applies:

- check whether the drive in the open-loop controlled mode (r1750.0) stalls under load. If yes, then increase the current setpoint using p1610.
- check whether the drive stalls due to the load if the speed setpoint is still zero. If yes, then increase the current setpoint using p1610.
- if the motor excitation (magnetizing) time (r0346) was significantly reduced, then it should be increased again.
- check the current limits (p0640, r0067). If the current limits are too low, then the drive cannot be magnetized.
- check the current controller (p1715, p1717) and the speed adaptation controller (p1764, p1767). If the dynamic response was significantly reduced, then this should be increased again.
- check the speed encoder, if another speed encoder was selected using the data set changeover. This must be connected to the motor that is controlled for the data set changeover.

If there is no fault, then the fault tolerance (p1745) or the delay time (p2178) can be increased.

For separately-excited synchronous motors (closed-loop control with speed encoder), the following applies:

- check the speed signal (interrupted cable, polarity, pulse number).
- ensure the correct motor parameterization (rating plate and equivalent circuit diagram parameters).
- check the excitation equipment and the interface to the closed-loop control.
- encoder the highest possible dynamic response of the closed-loop excitation current control.
- check the speed control for any tendency to oscillate and if resonance effects occur, use a bandstop filter.
- do not exceed the maximum speed (p2162).

If there is no fault, then the delay time can be increased (p2178).

Reaction upon N: NONE

Acknowl. upon N: NONE

Reaction upon A: NONE

Acknowl. upon A: NONE

A07903 Drive: Motor speed deviation

Message value: -

Drive object: SERVO_S110-CAN, SERVO_S110-DP, SERVO_S110-PN

Reaction: NONE

Acknowledge: NONE

Cause: The absolute value of the speed difference from the two setpoints (p2151, p2154) and the speed actual value (r2169) exceeds the tolerance threshold (p2163) longer than tolerated (p2164, p2166).

The alarm is only enabled for p2149.0 = 1.

Possible causes could be:

- the load torque is greater than the torque setpoint.
- when accelerating, the torque/current/power limit is reached. If the limits are not sufficient, then it is possible that the drive has been dimensioned too small.
- for closed-loop torque control, the speed setpoint does not track the speed actual value.
- for active Vdc controller.

For U/f control, the overload condition is detected as the Imax controller is active.

See also: p2149 (Monitoring configuration)

Remedy: - increase p2163 and/or p2166.
- increase the torque/current/power limits.
- for closed-loop torque control: The speed setpoint should track the speed actual value.
- de-activate alarm with p2149.0 = 0.

A07904 (N) External armature short-circuit: Contactor feedback signal "Closed" missing

Message value: -
Drive object: SERVO_S110-CAN, SERVO_S110-DP, SERVO_S110-PN
Reaction: NONE
Acknowledge: NONE
Cause: When closing, the contactor feedback signal (p1235) did not issue the signal "Closed" (r1239.1 = 1) within the monitoring time (p1236).
Remedy: - check that the contactor feedback signal is correctly connected (p1235).
- check the logic of the contactor feedback signal (r1239.1 = 1: "Closed", r1239.1 = 0: "Open").
- increase the monitoring time (p1236).
- if required, set the external armature short-circuit without contactor feedback signal (p1231 = 2).

Reaction upon N: NONE
Acknowl. upon N: NONE

F07905 (N, A) External armature short-circuit: Contactor feedback signal "Open" missing

Message value: -
Drive object: SERVO_S110-CAN, SERVO_S110-DP, SERVO_S110-PN
Reaction: OFF2 (NONE)
Acknowledge: IMMEDIATELY
Cause: When opening, the contactor feedback signal (p1235) did not issue the signal "Open" (r1239.1 = 0) within the monitoring time (p1236).
Remedy: - check that the contactor feedback signal is correctly connected (p1235).
- check the logic of the contactor feedback signal (r1239.1 = 1: "Closed", r1239.1 = 0: "Open").
- increase the monitoring time (p1236).
- if required, set the external armature short-circuit without contactor feedback signal (p1231 = 2).

Reaction upon N: NONE
Acknowl. upon N: NONE
Reaction upon A: NONE
Acknowl. upon A: NONE

F07906 Armature short-circuit / internal voltage protection: Parameterization error

Message value: Fault cause: %1, motor data set: %2
Drive object: SERVO_S110-CAN, SERVO_S110-DP, SERVO_S110-PN
Reaction: OFF2
Acknowledge: IMMEDIATELY
Cause: The armature short-circuit is incorrectly parameterized.
Fault value (r0949, interpret decimal):
zzzzyyxx: zzzz = fault cause, xx = motor data set
zzzz = 1: A permanent-magnet synchronous motor has not been selected.
zzzz = 2: An induction motor has not been selected.
zzzz = 101: External armature short-circuit: Output (r1239.0) not connected up.
zzzz = 102: External armature short-circuit with contactor feedback signal: No feedback signal connected (BI:p1235).
zzzz = 103: External armature short-circuit without contactor feedback signal: Delay time when opening (p1237) is 0.
zzzz = 201: Internal voltage protection: The maximum output current of the Motor Module (r0209) is less than 1.8 x motor short-circuit current (r0331).
zzzz = 202: Internal voltage protection: A Motor Module in booksize or chassis format is not being used.
zzzz = 203: Internal voltage protection: The motor short-circuit current (p0320) is greater than the maximum motor current (p0323).
zzzz = 204: Internal voltage protection: The activation (p1231 = 4) is not given for all motor data sets with synchronous motors (p0300 = 2xx, 4xx).

Remedy: For fault value = 1:

- an armature short-circuit / voltage protection is only permissible for permanent-magnetic synchronous motors. The highest position of the motor type in p0300 must either be 2 or 4.

For fault value = 101:

- the contactor for the external armature short-circuit configuration should be controlled using output signal r1239.0. The signal can, e.g. be connected to an output terminal via binector input p0738. Before this fault can be acknowledged, p1231 must be set again.

For fault value = 102:

- if the external armature short-circuit with contactor feedback signal (p1231 = 1) is selected, this feedback signal must be connected to an input terminal (e.g. r722.x) and then connected to BI: p1235.
- alternatively, the external armature short-circuit without contactor feedback signal (p1231 = 2) can be selected.

For fault value = 103:

- if the external armature short-circuit without contactor feedback signal (p1231 = 2) is selected, then a delay time must be parameterized in p1237. This time must always be greater than the actual contactor opening time, as otherwise the Motor Module would be short-circuited!

For fault value = 201:

- a Motor Module with a higher maximum current or a motor with a lower short-circuit current must be used. The maximum Motor Module current must be higher than 1.8 x short-circuit current of the motor.

For fault value = 202:

- for internal voltage protection, use a Motor Module in booksize or chassis format.

For fault value = 203:

- for internal voltage protection, only use short-circuit proof motors.

For fault value = 204:

- The internal voltage protection must either be activated for all motor data sets with synchronous motors (p0300 = 2xx, 4xx) (p1231 = 3) or it must be de-activated for all motor data sets (p1231 not equal to 3). This therefore ensures that the protection cannot be accidentally withdrawn as a result of a data set changeover. The fault can only be acknowledged if this condition is fulfilled.

F07907 Internal armature short-circuit: Motor terminals are not at zero potential after pulse suppression

Message value: -

Drive object: SERVO_S110-CAN, SERVO_S110-DP, SERVO_S110-PN

Reaction: NONE

Acknowledge: IMMEDIATELY

Cause: The function "Internal voltage protection" (p1231 = 3) was activated.

The following must be observed:

- when the internal voltage protection is active, after pulse suppression, all of the motor terminals are at half of the DC link voltage (without an internal voltage protection, the motor terminals are at zero potential)!
- it is only permissible to use motors that are short-circuit proof (p0320 < p0323).
- the Motor Module must be able to continually conduct 180% short-circuit current (r0331) of the motor (r0289).
- the internal voltage protection cannot be interrupted due to a fault response. If an overcurrent condition occurs during the active, internal voltage protection, then this can destroy the Motor Module and/or the motor.
- if the Motor Module does not support the autonomous, internal voltage protection (r0192.10 = 0), in order to ensure safe, reliable functioning when the line supply fails, an external 24 V power supply (UPS) must be used for the components.
- if the Motor Module does support the autonomous, internal voltage protection (r0192.10 = 1), in order to ensure safe, reliable functioning when the line supply fails, the 24 V power supply for the components must be provided through a Control Supply Module.
- if the internal voltage protection is active, it is not permissible that the motor is driven by the load for a longer period of time (e.g. as a result of loads that move the motor or another coupled motor).

Remedy: Not necessary.

This a note for the user.

A07908 Internal armature short-circuit active

Message value: -
Drive object: SERVO_S110-CAN, SERVO_S110-DP, SERVO_S110-PN
Reaction: NONE
Acknowledge: NONE
Cause: The Motor Module signals that the motor is short-circuited through the power semiconductors (r1239.5 = 1). The pulses cannot be enabled. The internal armature short-circuit is selected (p1231 = 4):
Remedy: For synchronous motors, the armature short-circuit braking is activated with binector input p1230 = 1 signal.
See also: p1230 (Armature short-circuit / DC braking activation), p1231 (Armature short-circuit / DC braking configuration)

F07909 Internal voltage protection: De-activation only effective after POWER ON

Message value: -
Drive object: SERVO_S110-CAN, SERVO_S110-DP, SERVO_S110-PN
Reaction: NONE
Acknowledge: POWER ON
Cause: The de-activation of the internal voltage protection (p1231 not equal to 3) only becomes effective after POWER ON.
The status signal r1239.6 = 1 indicates that the internal voltage protection is ready.
Remedy: Not necessary.
This a note for the user.

A07910 (N) Drive: Motor overtemperature

Message value: %1
Drive object: SERVO_S110-CAN, SERVO_S110-DP, SERVO_S110-PN
Reaction: NONE
Acknowledge: NONE
Cause: KTY:
The motor temperature has exceeded the alarm threshold (p0604 or p0616).
PTC:
The response threshold of 1650 Ohm was exceeded.
Alarm value (r2124, interpret decimal):
this is the number of the temperature channel leading to the message.
See also: p0604 (Motor temperature alarm threshold)
Remedy: - check the motor load.
- check the motor ambient temperature and cooling.
- check PTC or bimetallic NC contact.
Reaction upon N: NONE
Acknowl. upon N: NONE

F07913 Excitation current outside the tolerance range

Message value: -
Drive object: SERVO_S110-CAN, SERVO_S110-DP, SERVO_S110-PN
Reaction: OFF2
Acknowledge: IMMEDIATELY
Cause: The difference between the excitation current actual value and setpoint has exceeded the tolerance:
abs(r1641 - r1626) > p3201 + p3202
The cause of this fault is again reset for abs(r1641 - r1626) < p3201.
Remedy: - check the parameterization (p1640, p3201, p3202).
- check the interfaces to the excitation equipment (r1626, p1640).
- check the excitation equipment.

F07914 Flux out of tolerance

Message value: -
Drive object: SERVO_S110-CAN, SERVO_S110-DP, SERVO_S110-PN
Reaction: OFF2
Acknowledge: IMMEDIATELY
Cause: The difference between the flux actual value and setpoint has exceeded the tolerance:
abs(r0084 - r1598) > p3204 + p3205
The cause of this fault is again reset for abs(r0084 - r1598) < p3204.
The fault is only issued after the delay time in p3206 has expired.
Remedy: - check the parameterization (p3204, p3205).
- check the interfaces to the excitation equipment (r1626, p1640).
- check the excitation equipment.
- check the flux control (p1590, p1592, p1597).
- check the control for oscillation and take the appropriate counter measures (e.g. optimize the speed control loop, parameterize a bandstop filter).

A07918 (N) Three-phase setpoint generator operation selected/active

Message value: -
Drive object: SERVO_S110-CAN, SERVO_S110-DP, SERVO_S110-PN
Reaction: NONE
Acknowledge: NONE
Cause: Only for separately excited synchronous motors (p0300 = 5):
The actual open-loop/closed-loop control mode is I/f control (open-loop) with a fixed current (p1300 = 18).
The speed is entered via the setpoint channel and the current setpoint is given by the minimum current (p1620).
It must be ensured that in this mode, the control dynamic performance is very limited. This is the reason that longer ramp-up times should be set for the setpoint speed than for normal operation.
Remedy: Select another open-loop/closed-loop control mode
See also: p1300 (Open-loop/closed-loop control operating mode)
Reaction upon N: NONE
Acknowl. upon N: NONE

A07920 Drive: Torque/speed too low

Message value: -
Drive object: SERVO_S110-CAN, SERVO_S110-DP, SERVO_S110-PN
Reaction: NONE
Acknowledge: NONE
Cause: The torque deviates from the torque/speed envelope characteristic (too low).
See also: p2181 (Load monitoring response)
Remedy: - check the connection between the motor and load.
- adapt the parameterization corresponding to the load.

A07921 Drive: Torque/speed too high

Message value: -
Drive object: SERVO_S110-CAN, SERVO_S110-DP, SERVO_S110-PN
Reaction: NONE
Acknowledge: NONE
Cause: The torque deviates from the torque/speed envelope characteristic (too high).
Remedy: - check the connection between the motor and load.
- adapt the parameterization corresponding to the load.

A07922 Drive: Torque/speed out of tolerance

Message value: -
Drive object: SERVO_S110-CAN, SERVO_S110-DP, SERVO_S110-PN
Reaction: NONE
Acknowledge: NONE
Cause: The torque deviates from the torque/speed envelope characteristic.
Remedy: - check the connection between the motor and load.
- adapt the parameterization corresponding to the load.

F07923 Drive: Torque/speed too low

Message value: -
Drive object: SERVO_S110-CAN, SERVO_S110-DP, SERVO_S110-PN
Reaction: OFF1 (NONE, OFF2, OFF3)
Acknowledge: IMMEDIATELY
Cause: The torque deviates from the torque/speed envelope characteristic (too low).
Remedy: - check the connection between the motor and load.
- adapt the parameterization corresponding to the load.

F07924 Drive: Torque/speed too high

Message value: -
Drive object: SERVO_S110-CAN, SERVO_S110-DP, SERVO_S110-PN
Reaction: OFF1 (NONE, OFF2, OFF3)
Acknowledge: IMMEDIATELY
Cause: The torque deviates from the torque/speed envelope characteristic (too high).
Remedy: - check the connection between the motor and load.
- adapt the parameterization corresponding to the load.

F07925 Drive: Torque/speed out of tolerance

Message value: -
Drive object: SERVO_S110-CAN, SERVO_S110-DP, SERVO_S110-PN
Reaction: OFF1 (NONE, OFF2, OFF3)
Acknowledge: IMMEDIATELY
Cause: The torque deviates from the torque/speed envelope characteristic.
Remedy: - check the connection between the motor and load.
- adapt the parameterization corresponding to the load.

A07926 Drive: Envelope curve parameter invalid

Message value: Parameter: %1
Drive object: SERVO_S110-CAN, SERVO_S110-DP, SERVO_S110-PN
Reaction: NONE
Acknowledge: NONE
Cause: Invalid parameter values were entered for the envelope characteristic of the load monitoring.
The following rules apply for the speed thresholds:
p2182 < p2183 < p2184
The following rules apply for the torque thresholds:
p2185 > p2186
p2187 > p2188
p2189 > p2190
Alarm value (r2124, interpret decimal):
Number of the parameter with the invalid value.
Remedy: Set the parameters for the load monitoring according to the applicable rules or de-activate load monitoring (p2181 = 0, p2193 = 0).

A07927 DC braking active

Message value: -

Drive object: SERVO_S110-CAN, SERVO_S110-DP, SERVO_S110-PN

Reaction: NONE

Acknowledge: NONE

Cause: The motor is braked with DC current. DC braking is active.

1)

A message with response DCBRK is active. The motor is braked with the braking current set in p1232 for the duration set in in p1233. If the standstill threshold p1226 is undershot, then braking is prematurely canceled.

2)

DC braking has been activated at binector input p1230 with the DC braking set (p1230 = 4). Braking current p1232 is injected until this binector input becomes inactive.

Remedy: Not necessary.

The alarm automatically disappears once DC braking has been executed.

F07928 Internal voltage protection initiated

Message value: -

Drive object: SERVO_S110-CAN, SERVO_S110-DP, SERVO_S110-PN

Reaction: OFF2

Acknowledge: IMMEDIATELY

Cause: The Motor Module signals that the motor is short-circuited through the power semiconductors (r1239.5 = 1). The pulses cannot be enabled. The internal voltage protection is selected (p1231 = 3).

Remedy: If the Motor Module supports the autonomous internal voltage protection (r0192.10 = 1), then the Motor Module automatically decides - using the DC link voltage - as to whether the armature short-circuit should be activated.

The armature short-circuit is activated and response OFF2 is initiated if the DC link voltage exceeds 800 V. If the DC link voltage falls below 450 V, then the armature short-circuit is withdrawn.

If the motor is still in a critical speed range, the armature short-circuit is re-activated once the DC link voltage exceeds the threshold of 800 V.

If the autonomous (independent) internal voltage protection is active (r1239.5 = 1) and the line supply returns (450 V < DC link voltage < 800 V), the armature short-circuit is withdrawn after 3 minutes.

F07930 Drive: Brake control error

Message value: %1

Drive object: SERVO_S110-CAN, SERVO_S110-DP, SERVO_S110-PN

Reaction: OFF1 (NONE, OFF2, OFF3)

Acknowledge: IMMEDIATELY

Cause: The Control Unit has detected a brake control error.

Fault value (r0949, interpret decimal):

10, 11: Fault in "open holding brake" operation.

- No brake connected or wire breakage (check whether brake releases for p1278 = 1).
- Ground fault in brake cable.

20: Fault in "brake open" state.

- Short-circuit in brake winding.

30, 31: Fault in "close holding brake" operation.

- No brake connected or wire breakage (check whether brake releases for p1278 = 1).
- Short-circuit in brake winding.

40: Fault in "brake closed" state.

50: Fault in the brake control circuit of the Control Unit or communication fault between Control Unit and Motor Module (brake control diagnostics).

80: When using the Safe Brake Adaptor (SBA), a fault has occurred in the brake control of the Control Unit.

Note:

The following causes may apply to fault values:

- motor cable is not shielded correctly.
- defect in control circuit of the Motor Module.

See also: p1278 (Brake control diagnostics evaluation)

Remedy: - check the motor holding brake connection.
- check the function of the motor holding brake.
- check whether there is a DRIVE-CLiQ communication error between the Control Unit and the Motor Module involved and, if required, carry out a diagnostics routine for the faults identified.
- check that the electrical cabinet design and cable routing are in compliance with EMC regulations (e.g. shield of the motor cable and brake conductors are connected with the shield connecting plate and the motor connectors are tightly screwed to the housing).
- replace the Motor Module involved.

Operation with Safe Brake Module:
- check the Safe Brake Modules connection.
- replace the Safe Brake Module.

Operation with Safe Brake Module (SBA):
- check the SBA connection and if required, replace the SBA.

See also: p1215 (Motor holding brake configuration), p1278 (Brake control diagnostics evaluation)

A07931 (F, N) Brake does not open

Message value: -
Drive object: SERVO_S110-CAN, SERVO_S110-DP, SERVO_S110-PN
Reaction: NONE
Acknowledge: NONE
Cause: This alarm is output for r1229.4 = 1.
See also: p1216 (Motor holding brake opening time), r1229 (Motor holding brake status word)
Remedy: - check the functionality of the motor holding brake.
- check the feedback signal (p1223).

Reaction upon F: NONE (OFF1, OFF2, OFF3)
Acknowl. upon F: IMMEDIATELY
Reaction upon N: NONE
Acknowl. upon N: NONE

A07932 Brake does not close

Message value: -
Drive object: SERVO_S110-CAN, SERVO_S110-DP, SERVO_S110-PN
Reaction: NONE
Acknowledge: NONE
Cause: This alarm is output for r1229.5 = 1.
For r1229.5 = 1, OFF1/OFF3 are suppressed to prevent the drive accelerating by a load that drives the motor - whereby OFF2 remains effective.
See also: p1217 (Motor holding brake closing time), r1229 (Motor holding brake status word)
Remedy: - check the functionality of the motor holding brake.
- check the feedback signal (p1222).

F07934 (N) Drive: S120 Combi motor holding brake configuration

Message value: %1
Drive object: SERVO_S110-CAN, SERVO_S110-DP, SERVO_S110-PN
Reaction: NONE (OFF1, OFF2, OFF3)
Acknowledge: IMMEDIATELY (POWER ON)
Cause: A connected motor holding brake has been detected with an S120 Combi. However, this brake has not been assigned to just one Combi feed drive and, therefore, brake control is not configured (correctly). It is also not permitted to assign the brake to the spindle.
Fault value (r0949, interpret decimal):
0: No motor holding brake is assigned (p1215 = 0 or 3 on all S120 Combi feed drives).
1: More than one motor holding brake has been assigned (p1215 = 1 or 2 on more than one S120 Combi feed drive) - or there is more than one DRIVE-CLiQ motor with motor holding brake.
2: Brake was accidentally assigned to the spindle (p1215 = 1); this is not permitted.
3: An attempt was made to enable the function "Safe brake control" (SBC, p9602 = p9802 = 1) for the spindle. This is not permitted.

Remedy: Check whether the motor holding brake has been assigned to one S120 Combi feed drive exclusively (p1215 = 1 or 2) and not the spindle.
The fault will only be withdrawn once the motor holding brake has been assigned to just one of the S120 Combi feed drives and not the spindle (p1215 = 1 or 2 for this one drive). From this point, the motor holding brake will be controlled by this drive.
See also: p1215 (Motor holding brake configuration)
Reaction upon N: NONE
Acknowl. upon N: NONE

F07935 (N) Drive: Motor holding brake detected

Message value: %1
Drive object: SERVO_S110-CAN, SERVO_S110-DP, SERVO_S110-PN
Reaction: NONE (OFF1, OFF2, OFF3)
Acknowledge: IMMEDIATELY
Cause: A motor holding brake was detected where the brake control has not been configured (p1215 = 0).
Fault value (r0949, interpret decimal):
0:
The brake control configuration was set to "motor holding brake the same as sequence control" (p1215 = 1) (only when commissioning for the first time).
1:
The brake control configuration was left at "No motor holding brake available" (p1215 = 0).
Remedy: For fault value = 0:
- No remedy required.
For fault value = 1:
- If required change the motor holding brake configuration (p1215 = 1, 2).
- If this fault value unexpectedly occurs, then the motor connections should be checked in order to rule out that they have been interchanged.
See also: p1215 (Motor holding brake configuration)
Reaction upon N: NONE
Acknowl. upon N: NONE

F07950 (A) Drive: Incorrect motor parameter

Message value: Parameter: %1
Drive object: SERVO_S110-CAN, SERVO_S110-DP, SERVO_S110-PN
Reaction: NONE
Acknowledge: IMMEDIATELY
Cause: - the motor parameters were incorrectly entered while commissioning (e.g. p0300 = 0, no motor)
- The braking resistor (p6811) has still not been parameterized - commissioning cannot be completed.
Fault value (r0949, interpret decimal):
Parameter number involved.
The following motor parameters can be incorrect for fault value 307:
p0304, p0305, p0307, p0308, p0309
See also: p0300, p0301, p0304, p0305, p0307, p0310, p0311, p0314, p0316, p0320, p0322, p0323
Remedy: Compare the motor data with the rating plate data and if required, correct.
See also: p0300, p0301, p0304, p0305, p0307, p0310, p0311, p0314, p0316, p0320, p0322, p0323
Reaction upon A: NONE
Acknowl. upon A: NONE

F07955 Drive: Motor has been changed

Message value: Parameter: %1
Drive object: SERVO_S110-CAN, SERVO_S110-DP, SERVO_S110-PN
Reaction: NONE
Acknowledge: IMMEDIATELY
Cause: The code number of the actual motor with DRIVE-CLiQ does not match the saved number.

Fault value (r0949, interpret decimal):
Number of the incorrect parameter.
See also: p0301 (Motor code number selection), r0302 (Motor code number of motor with DRIVE-CLiQ)

Remedy: Connect the original motor, power up the Control Unit again (POWER ON) and exit quick commissioning with p0010 = 0.
Or set p0300 = 10000 (load the parameters from the motor with DRIVE-CLiQ) and re-commission.
Quick commissioning (p0010 = 1) is automatically exited with p3900 > 0.
If quick commissioning was exited with p0010 = 0, then an automatic controller calculation (p0340 = 1) is not carried out.

F07956 (A) Drive: Motor code does not match the list (catalog) motor

Message value: %1
Drive object: SERVO_S110-CAN, SERVO_S110-DP, SERVO_S110-PN
Reaction: NONE
Acknowledge: IMMEDIATELY
Cause: The motor code of the connected motor with DRIVE-CLiQ does not match the possible list motor types (see selection in p0300).
The connected motor with DRIVE-CLiQ might not be supported by this firmware version.
Fault value (r0949, interpret decimal):
Motor code of the connected motor with DRIVE-CLiQ.
Note:
The first three digits of the motor code generally correspond to the list motor type.
Remedy: Use a motor with DRIVE-CLiQ and the matching motor code.
Reaction upon A: NONE
Acknowl. upon A: NONE

A07965 (N) Drive: Save required

Message value: -
Drive object: SERVO_S110-CAN, SERVO_S110-DP, SERVO_S110-PN
Reaction: NONE
Acknowledge: NONE
Cause: The angular commutation offset (p0431) was re-defined and has still not been saved.
In order to permanently accept the new value, it must be saved in a non-volatile fashion (p0971, p0977).
See also: p0431 (Angular commutation offset), p1990 (Encoder adjustment determine angular commutation offset)
Remedy: Not necessary.
This alarm automatically disappears after the data has been saved.
See also: p0971 (Save drive object parameters), p0977 (Save all parameters)
Reaction upon N: NONE
Acknowl. upon N: NONE

F07966 Drive: Check the commutation angle

Message value: -
Drive object: SERVO_S110-CAN, SERVO_S110-DP, SERVO_S110-PN
Reaction: OFF2 (NONE)
Acknowledge: IMMEDIATELY
Cause: The speed actual value was inverted and the associated angular commutation offset is not equal to zero and is therefore possibly incorrect.
Remedy: Angular commutation offset after the actual value inversion or determine it again (p1990=1).

A07971 (N) Drive: Angular commutation offset determination activated

Message value: -
Drive object: SERVO_S110-CAN, SERVO_S110-DP, SERVO_S110-PN
Reaction: NONE
Acknowledge: NONE
Cause: The automatic determination of the angular commutation offset (encoder adjustment) is activated (p1990 = 1).
The automatic determination is carried out at the next power-on command.

For SERVO and fault F07414 present, the following applies:
The determination of the angular commutation offset is automatically activated (p1990 = 1), if a pole position identification technique is set in p1980.
See also: p1990 (Encoder adjustment determine angular commutation offset)

Remedy: Not necessary.
The alarm automatically disappears after determination or for the setting p1990 = 0.

Reaction upon N: NONE
Acknowl. upon N: NONE

A07980 Drive: Rotating measurement activated

Message value: -
Drive object: SERVO_S110-CAN, SERVO_S110-DP, SERVO_S110-PN
Reaction: NONE
Acknowledge: NONE
Cause: The rotating measurement is activated. For the rotating measurement, the motor can accelerate up to the maximum speed and with maximum torque. Only the parameterized current limit (p0640) and the maximum speed (p1082) are effective. The behavior of the motor can be influenced using the direction inhibit (p1959.14, p1959.15) and the ramp-up/ramp-down time (p1958).
The rotating measurement is carried out at the next power-on command.
See also: p1960 (Rotating measurement selection)
Remedy: Not necessary.
The alarm automatically disappears after the rotating measurement has been successfully completed or for the setting p1960 = 0.
Note:
If a POWER ON or a warm restart is performed with motor data identification selected, the motor data identification request will be lost. If motor data identification is required, it will need to be selected again manually following ramp-up.

F07990 Drive: Incorrect motor data identification

Message value: %1
Drive object: SERVO_S110-CAN, SERVO_S110-DP, SERVO_S110-PN
Reaction: OFF2 (NONE, OFF1)
Acknowledge: IMMEDIATELY
Cause: A fault has occurred during the identification routine.
Fault value (r0949, interpret decimal):
1: Current limit value reached.
2: Identified stator resistance lies outside the expected range 0.1 ... 100% of Zn.
3: Identified rotor resistance lies outside the expected range 0.1 ... 100% of Zn.
4: Identified stator reactance lies outside the expected range 50 ... 500 % of Zn.
5: Identified magnetizing reactance lies outside the expected range 50 ... 500 % of Zn.
6: Identified rotor time constant lies outside the expected range 10 ms ... 5 s.
7: Identified total leakage reactance lies outside the expected range 4 ... 50 % of Zn.
8: Identified stator leakage reactance lies outside the expected range 2 ... 50% of Zn.
9: Identified rotor leakage reactance lies outside the expected range 2 ... 50% of Zn.
10: Data set changeover during motor data identification.
11: Motor shaft rotates.
20: Identified threshold voltage of the semiconductor devices lies outside the expected range 0 ... 10 V.
30: Current controller in voltage limiting.
40: At least one identification contains errors. The identified parameters are not saved to prevent inconsistencies.
50: With the selected current controller sampling rate, the pulse frequency cannot be implemented.
Note:
Percentage values are referred to the rated motor impedance:
Zn = Vmot.nom / sqrt(3) / Imot,nom
101: Voltage amplitude even at 30% maximum current amplitude is too low to measure the inductance.
102, 104: Voltage limiting while measuring the inductance.
103: Maximum frequency exceeded during the rotating inductance measurement.

110: Motor not finely synchronized before the rotating measurement.
111: The zero mark is not received within 2 revolutions.
112:Fine synchronization is not realized within 8 seconds after the zero mark has been passed.
113: The power, torque or current limit is zero.
115: U/f control is active.
120: Error when evaluating the magnetizing inductance.
125: Cable resistance greater than the total resistance.
126: Series inductance greater than the total leakage inductance.
127: Identified leakage inductance negative.
128: Identified stator resistance negative.
129: Identified rotor resistance negative.
130: Drive data set changeover during the motor data identification routine.
140: The setpoint channel inhibits both directions.
160: Accelerating when determining kT, moment of inertia or reluctance torque too short or the accelerating time is too long.
173: Internal problem.
180: Identification speed (maximum speed, rated speed, 0.9 x p0348) less than p1755.
190: Speed setpoint not equal to zero.
191: An actual speed of zero is not reached.
192: Speed setpoint not reached.
193: Inadmissible motion of the motor when identifying the voltage emulation error.
194: Supplementary torque (r1515) not equal to zero.
195: Closed-loop torque control active.
200, 201: Not possible to identify the voltage emulation error characteristic of the drive converter (p1952, p1953).

Remedy:

For fault value = 0:
- check whether the motor is correctly connected. Observe configuration (star-delta).

Re fault value = 1 ... 40:
- check whether motor data have been correctly entered in p0300, p0304 ... p0311.
- is there an appropriate relationship between the motor power rating and that of the Motor Module? The ratio of the Motor Module to the rated motor current should not be less than 0.5 and not be greater than 4.
- check configuration (star-delta).

For fault value = 2:
- for parallel circuits, check the motor winding system in p7003. If, for power units connected in parallel, a motor is specified with a single-winding system (p7003 = 0), although a multi-winding system is being used, then a large proportion of the stator resistance is interpreted as feeder cable resistance and entered in p0352.

Re fault value = 4, 7:
- check whether inductances are correctly entered in p0233 and p0353.
- check whether motor has been correctly connected (star-delta).

For fault value = 50:
- reduce the current controller sampling rate.

For fault value = 101:
- increase current limit (p0640) or torque limit (p1520, p1521).
- check current controller gain (p1715).
- reduce current controller sampling time (p0115).

It may be impossible to completely identify the L characteristic, as required current amplitude is too high.
- suppress meas. (p1909, p1959).

Re fault value = 102, 104:
- reduce current limit (p0640).
- check current controller P gain.
- suppress meas. (p1909, p1959).

For fault value = 103:
- increase external moment of inertia (if possible).
- reduce current controller sampling time (p0115).
- suppress meas. (p1909, p1959).

For fault value = 110:
- before rotating measurement, traverse motor over zero mark.

For fault value = 111:
- it is possible that encoder does not have zero mark. Correct setting in p0404.15.
- encoder pulse number was incorrectly entered. Correct setting in p0408.
- if zero mark signal is defective, replace encoder.

For fault value = 112:
- upgrade encoder software.

For fault value = 113:
- check the limits (p0640, p1520, p1521, p1530, p1531), correct the zero values.

For fault value = 115:
- de-select U/f control (p1317 = 0).

For fault value = 120:
- check current controller P gain (p1715) and if required, reduce.
- increase the pulse frequency (p1800).

For fault value = 125:
- reduce cable resistance (p0352).

For fault value = 126:
- reduce series inductance (p0353).

Re fault = 127, 128, 129:
- it is possible that current controller is oscillating. Reduce p1715 before next measurement.

For fault value = 130:
- do not initiate a drive data set changeover during motor ident. routine.

For fault value = 140:
- before the measurement, enable at least one direction (p1110 = 0 or p1111 = 0 or p1959.14 = 1 or p1959.15 = 1).

For fault value = 160:
- extend accelerating time when determining kT, moment of inertia and reluctance torque, e.g. by increasing max. speed (p1082), increasing moment of inertia or reducing max. current (p0640).
- in encoderless operation with load moment of inertia, parameterize the load moment of inertia (p1498).
- reduce the ramp-up time (p1958).
- increase speed controller P-gain (p1460).
- suppress meas. (p1959).

For fault value = 173:
-

For fault value = 180:
- increase max. speed (p1082).
- reduce p1755.
- suppress meas. (p1909, p1959).

For fault value = 190:
- set speed setpoint to zero.

For fault value = 191:
- do not start motor data identification routine while motor is still rotating.

For fault value = 192:
- check closed-loop speed control (motor rotor may be locked or closed-loop speed control is not functioning).
- for p1215 = 1, 3 (brake the same as the sequence control) check the control sense (p0410.0).
- ensure that enable signals are present during measurement.
- remove any pulling loads from motor.
- increase max. current (p0640).
- reduce max. speed (p1082).
- suppress meas. (p1959).

For fault value = 193:
- the motor has moved through more than 5 ° electrical (r0093). Lock motor rotor at one of these pole position angles (r0093): 90 °, 210 ° or 330 ° (+/-5 °) and then start identification.

For fault value = 194:
- switch out all supplementary torques (e.g. CI: p1511).
- for hanging/suspended axes: Lock motor rotor at one of these pole position angles (r0093): 90 °, 210 ° or 330 ° (+/-1 °) and then start identification.

For fault value = 195:
- de-select closed-loop torque control (p1300 = 21 or 20, or set the signal source in p1501 to a 0 signal).

Re fault value = 200, 201:
- set pulse frequency to 0.5 x current controller frequency (e.g. 4 kHz for a current controller clock cycle of 125 us).
- reduce cable length between Motor Module and motor.
- read-out measured values (r1950, r1951) and therefore determine suitable values for p1952, p1953 according to your own estimation.

A07991 (N) Drive: Motor data identification activated

Message value: -
Drive object: SERVO_S110-CAN, SERVO_S110-DP, SERVO_S110-PN
Reaction: NONE
Acknowledge: NONE
Cause: The motor data identification routine is activated.
The motor data identification routine is carried out at the next power-on command.
See also: p1910 (Motor data identification routine stationary (standstill)), p1960 (Rotating measurement selection)
Remedy: Not necessary.
The alarm automatically disappears after the motor data identification routine has been successfully completed or for the setting p1910 = 0 or p1960 = 0.
If a POWER ON or a warm restart is performed with motor data identification selected, the motor data identification request will be lost. If motor data identification is required, it will need to be selected again manually following ramp-up.
Reaction upon N: NONE
Acknowl. upon N: NONE

F07993 Drive: Incorrect direction of rotation of the field or encoder actual value inversion

Message value: -
Drive object: SERVO_S110-CAN, SERVO_S110-DP, SERVO_S110-PN
Reaction: OFF2 (NONE)
Acknowledge: IMMEDIATELY
Cause: Either the direction of the rotating field or the encoder actual value has an incorrect sign. The motor data identification automatically changed the actual value inversion (p0410) in order to correct the control sense. This can result in a direction of rotation change.
Note:
To acknowledge this fault, the correctness of the direction of rotation must first be acknowledged with p1910 = -2.
Remedy: Check the direction of rotation (also for the position controller, if one is being used).
If the direction of rotation is correct, the following applies:
No additional measures are required (except set p1910 = -2 and acknowledge fault).
If the direction of rotation is incorrect, the following applies:
To change the direction of rotation, two phases must be interchanged and the motor identification routine must be repeated.

F07995 Drive: Pole position identification not successful

Message value: %1
Drive object: SERVO_S110-CAN, SERVO_S110-DP, SERVO_S110-PN
Reaction: OFF2
Acknowledge: IMMEDIATELY
Cause: The pole position identification routine was unsuccessful.
Fault value (r0949, interpret decimal):
1: No current is established.
2: The starting current is not zero.
3: The selected max. distance was exceeded (p1981).
4x: The measuring signal does not permit a clear evaluation.
5: The max. current was exceeded during the measurement.
6: The current measurement must be re-calibrated.
7x: The Sensor Module does not support the pole position identification routine.
8: The pole position identification routine current required is greater than the max. current.

9: The set pole position identification routine current is zero.

10: Data set changeover during the pole position identification.

11: The encoder adjustment to determine the commutation angle is active (p1990 = 1) and the encoder without zero mark is not finely synchronized or does not have any valid data.

100: Motion-based pole position identification, 1st and 2nd measurement different. Motor blocked or current (p1993) too low.

101: Motion-based position position identification, insufficient motion, motor blocked or current (p1993) too low.

102: Motion-based pole position identification, brake is being used and is closed. The motion-based position position identification in conjunction with the brake is not permitted.

103: Motion-based pole position identification without encoder.

104: Motion-based pole position identification, speed actual value not zero after stabilizing time.

200: Elasticity-based pole position identification, internal error in the arctan calculation (0/0).

201: Elasticity-based pole position identification, too few measuring points that can be evaluated.

202: Elasticity-based pole position identification, outliers in the measurement series.

203: Elasticity-based pole position identification, maximum rotation without current.

204: Elasticity-based pole position identification, no positive edge found.

205: Elasticity-based pole position identification, the result of the Fourier transformation differs by more than 480 ° electrical / p3093 from the rough estimate.

206: Elasticity-based pole position identification, plausibility test unsuccessful.

207: Elasticity-based pole position identification, no negative measured value found.

It is possible that all measured values are identical. The expected deflection was not able to be reached, either because the expectation is too high or not enough current was able to be established.

208: Elasticity-based pole position identification, measuring current is 0.

209: Elasticity-based pole position identification, the selected max. distance was exceeded (p3095).

210: Elasticity-based pole position identification without encoder.

250 ... 260:

Elasticity-based pole position identification, more than 3 attempts have been made and fault value 200 ... 210 output.

Example:

Fault value= 253 --> more than 3 attempts have been made and fault value 203 output.

Remedy:

For fault value = 1:

- check the motor connection and DC link voltage.
- for the following parameters, set practical values that are not zero (p0325, p0329).

Re fault value = 1, 2:

- in the case of a large computing time load (e.g., 6 drives with Safety Integrated), set the computing dead time of the current controller to late transfers (p0117 = 3).

For fault value = 3:

- increase the max. distance (p1981).
- reduce the currents for the pole position identification routine (p0325, p0329).
- stop the motor in order to carry out the pole position identification routine.

For fault value = 5:

- reduce the currents for the pole position identification routine (p0325, p0329).

For fault value = 6:

- re-calibrate the Motor Module.

For fault value = 8:

- reduce the currents for the pole position identification routine (p0329, p0325, p1993).
- the power unit cannot provide the necessary pole position identification routine current (p0209 < p0329, p0325, p1993), replace the power unit with a power unit with a higher max. current.

For fault value = 9:

- enter a value not equal to zero in the pole position identification routine current (p0329, p0325, p1993).

For fault value = 10:

- do not initiate a data set changeover during the pole position identification.

For fault value = 11:

- for incremental encoders without commutation with zero mark (p0404.15 = 0), it does not make sense to adjust the encoder to determine the commutation angle (p1990 = 1). In this case, the function should be de-selected (p1990 = 0) or, for an encoder with suitable zero mark, commutation with zero mark should be selected (p0404.15 = 1).
- for absolute encoders, only adjust the encoder to determine the commutation angle (p1990 = 1) if the encoder supplies commutation information and is finely synchronized (p1992.8 = 1 and p1992.10 = 1). The encoder is possibly parked, de-activated (p0145), not ready for operation or signals a fault condition.
- de-select the encoder adjustment to determine the commutation angle (set p1990 to 0).

Re fault value = 40 ... 49:

- increase the currents for the pole position identification routine (p0325, p0329).
- stop the motor in order to carry out the pole position identification routine.
- select another technique for pole position identification routine (p1980).
- use another motor, absolute encoder or Hall sensors.

Re fault value = 70 ... 79:

- upgrade the software in the Sensor Module.

Re fault value = 100, 101:

- check and ensure that the motor is free to move.
- increase the current for motion-based pole position identification (p1993).

For fault value = 102:

- if the motor is to be operated with a brake: Select a different technique to identify the pole position (p1980).
- if the motor can be operated without a brake: Open the brake (p1215 = 2).

For fault value = 103:

- the motion-based pole position identification can only be carried out using an encoder. Connect an encoder or select another technique for pole position identification routine (p1980).

For fault value = 104:

- pole position identification, increase the smoothing time, motion-based (p1997).
- pole position identification, increase the rise time, motion-based (p1994).
- pole position identification, check the gain, motion-based (p1995).
- pole position identification, check the integral time, motion-based (p1996).
- for motor encoders with track A/B sq-wave (p0404.3 = 1) and flank time measurement (p0430.20 = 0), disable the integral time (p1996 = 0).

For fault value = 200:

- check parameter setting (p3090 ... p3096).

For fault value = 201:

- check parameter setting (p3090 ... p3096).
- reduce p3094.

For fault value = 202:

- check parameter setting (p3090 ... p3096).
- fault has occurred during the identification. Repeat the measurement.
- check the brake or brake control.

For fault value = 203:

- check the brake or brake control.
- check the measuring current (p3096).
- increase p3094.

For fault value = 204:

- check parameter setting (p3090 ... p3096).

For fault value = 205:

- check parameter setting (p3090 ... p3096).

For fault value = 206:

- check parameter setting (p3090 ... p3096).
- fault has occurred during the identification. Repeat the measurement.
- check the brake or brake control.

For fault value = 207:

- reduce the expected deflection (p3094).
- increase the measuring current (p3096).

For fault value = 208:
- set the measuring current (p3096).
For fault value = 209:
- check parameter setting p3095.
- check the brake or brake control.
For fault value = 210:
- the elasticity-based pole position identification can only be carried out using an encoder. Connect an encoder or select another technique for pole position identification routine (p1980).
Re fault value = 250 ... 260:
- check parameter setting (p3090 ... p3096, p1980).

F07996 Drive: Pole position identification routine not carried out

Message value: -
Drive object: SERVO_S110-CAN, SERVO_S110-DP, SERVO_S110-PN
Reaction: ENCODER (OFF2)
Acknowledge: IMMEDIATELY
Cause: In operation, the operating mode that requires a pole position identification was changed over, which is not possible in this state.
- the drive was changed over, flying, from encoderless operation to operation with encoder without having previously carried out a pole position identification for the encoder. p1404 is then at a value between zero and the max. speed and the pulses in the speed range above p1404 were enabled without a pole position ident. routine having been previously carried out in operation with encoder.
- in operation, an EDS changeover was made to an encoder where it is necessary to carry out a pole position identification. However, this has still not been carried out (p1982 = 1 or 2 and p1992.7 = 0).

Remedy:
- for a flying changeover between operation with and without encoder with pole position identification after POWER ON or commissioning (p0010 not equal to zero) enable the pulses once at zero speed. This means that the pole position identification routine is carried out and the result is available for operation.
- carry out the EDS changeover with the pulses inhibited, or, before the changeover, carry out a pole position identification using this data set.

A07999 Drive: Motor data identification cannot be activated

Message value: %1
Drive object: SERVO_S110-CAN, SERVO_S110-DP, SERVO_S110-PN
Reaction: NONE
Acknowledge: NONE
Cause: Closed-loop control is enabled on a SERVO drive object type. To select motor data identification, pulses must be suppressed for all SERVO drive objects.
Fault value (r0949, interpret decimal):
Drive object with enabled closed-loop control.
Remedy: Withdraw the pulse enable on all drives and re-activate the motor data identification.

F08501 (N, A) PROFINET: Setpoint timeout

Message value: -
Drive object: CU_S110-CAN, CU_S110-DP, CU_S110-PN
Reaction: NONE
Acknowledge: IMMEDIATELY
Cause: The reception of setpoints from PROFINET has been interrupted.
- bus connection interrupted.
- controller switched off.
- controller set into the STOP state.

Remedy: Restore the bus connection and set the controller to RUN.
Reaction upon N: NONE
Acknowl. upon N: NONE
Reaction upon A: NONE
Acknowl. upon A: NONE

A08511 (F) PROFINET: Receive configuration data invalid

Message value: %1
Drive object: CU_S110-CAN, CU_S110-DP, CU_S110-PN
Reaction: NONE
Acknowledge: NONE
Cause: The drive unit did not accept the receive configuration data.
Alarm value (r2124, interpret decimal):
Return value of the receive configuration data check.
1: Connection established to more than two drive objects.
2: Too many PZD data words for output or input to a drive object. The number of possible PZD items in a drive object is determined by the number of indices in r2050/p2051.
3: Uneven number of bytes for input or output.
4: Setting data for synchronization not accepted. For more information, see A01902.
5: Cyclic operation not active.
17: Shared Device: Configuration of the F-CPU has been changed.
501: PROFIsafe parameter error (e.g. F_dest).
Remedy: Check the receive configuration data.
Re alarm value = 2:
Check the number of data words for output and input to a drive object.
Re alarm value = 17:
Shared Device: Unplug/plug A-CPU.
Re alarm value = 501:
Check the set PROFIsafe address (p9610).
Reaction upon F: NONE
Acknowl. upon F: IMMEDIATELY

A08526 (F) PROFINET: No cyclic connection

Message value: -
Drive object: CU_S110-CAN, CU_S110-DP, CU_S110-PN
Reaction: NONE
Acknowledge: NONE
Cause: There is no connection to a PROFINET controller.
Remedy: Establish the cyclic connection and activate the controller with cyclic operation.
Check the parameters "Name of Station" and "IP of Station" (r61000, r61001).
Reaction upon F: NONE
Acknowl. upon F: IMMEDIATELY

A08565 PROFINET: Consistency error affecting adjustable parameters

Message value: -
Drive object: CU_S110-CAN, CU_S110-DP, CU_S110-PN
Reaction: NONE
Acknowledge: NONE
Cause: A consistency error was detected when activating the configuration (p8925 = 1) for the PROFINET interface.
The currently set configuration has not been activated.
Possible causes:
- IP address, subnet mask or default gateway is not correct
- IP address or station name used twice in the network
- station name contains invalid characters, etc.
See also: p8920 (PN Name of Station), p8921 (PN IP address of station), p8922 (PN Default Gateway of Station), p8923 (PN Subnet Mask of Station)
Remedy: Check the required interface configuration (p8920 and following), correct if necessary, and activate (p8925 = 1).
See also: p8925 (PN interface configuration)

F08700 (A) CAN: Communications error

Message value: %1

Drive object: All objects

Reaction: OFF3 (NONE, OFF1, OFF2)

Acknowledge: IMMEDIATELY

Cause: A CAN communications error has occurred.

Fault value (r0949, interpret decimal):

1: The error counter for the send telegrams has exceeded the BUS OFF value 255. The bus disables the CAN controller.

- bus cable short circuit.
- incorrect baud rate.
- incorrect bit timing.

2: The master no longer interrogated the CAN node status longer than for its "life time". The "life time" is obtained from the "guard time" (p8604[0]) multiplied by the "life time factor" (p8604[1]).

- bus cable interrupted.
- bus cable not connected.
- incorrect baud rate.
- incorrect bit timing.
- master fault.

Note:

The fault response can be set as required using p8641.

See also: p8604 (CAN node guarding), p8641 (CAN Abort Connection Option Code)

Remedy:

- check the bus cable
- check the baud rate (p8622).
- check the bit timing (p8623).
- check the master.

The CAN controller must be manually restarted with p8608 = 1 after the cause of the fault has been resolved!

See also: p8608 (CAN Clear Bus Off Error), p8622 (CAN bit rate), p8623 (CAN Bit Timing selection)

Reaction upon A: NONE

Acknowl. upon A: NONE

F08701 CAN: NMT state change

Message value: %1

Drive object: All objects

Reaction: OFF3

Acknowledge: IMMEDIATELY

Cause: A CANopen NMT state transition from "operational" to "pre-operational" or after "stopped".

Fault value (r0949, interpret decimal):

1: CANopen NMT state transition from "operational" to "pre-operational".

2: CANopen NMT state transition from "operational" to "stopped".

Note:

In the NMT state "pre-operational", process data cannot be transferred and in the NMT state "stopped", no process data and no service data can be transferred.

Remedy: Not necessary.

Acknowledge the fault and continue operation.

F08702 (A) CAN: RPDO Timeout

Message value: -

Drive object: All objects

Reaction: OFF3 (NONE, OFF1, OFF2)

Acknowledge: IMMEDIATELY

Cause: The monitoring time of the CANopen RPDO telegram has expired because the bus connection was either interrupted or the CANopen Master was switched-off.

See also: p8699 (CAN: RPDO monitoring time)

Remedy: - check the bus cable
- check the master.
- If required, increase the monitoring time (p8699).

Reaction upon A: NONE
Acknowl. upon A: NONE

A08751 CAN: Telegram loss

Message value: -
Drive object: All objects
Reaction: NONE
Acknowledge: NONE
Cause: The CAN controller has lost a receive message (telegram).
Remedy: Reduce the cycle times of the receive messages.

A08752 CAN: Error counter for error passive exceeded

Message value: -
Drive object: All objects
Reaction: NONE
Acknowledge: NONE
Cause: The error counter for the send or receive telegrams has exceeded the value 127.
Remedy: - check the bus cable
- set a higher baud rate (p8622).
- check the bit timing and if required optimize (p8623).
See also: p8622 (CAN bit rate), p8623 (CAN Bit Timing selection)

A08753 CAN: Message buffer overflow

Message value: %1
Drive object: All objects
Reaction: NONE
Acknowledge: NONE
Cause: A message buffer overflow.
Alarm value (r2124, interpret decimal):
1: Non-cyclic send buffer (SDO response buffer) overflow.
2: Non-cyclic receive buffer (SDO receive buffer) overflow.
3: Cyclic send buffer (PDO send buffer) overflow.
Remedy: - check the bus cable.
- set a higher baud rate (p8622).
- check the bit timing and if required optimize (p8623).
Re alarm value = 2:
- reduce the cycle times of the SDO receive messages.
- SDO request from master only after SDO feedback for previous SDO request.
See also: p8622 (CAN bit rate), p8623 (CAN Bit Timing selection)

A08754 CAN: Incorrect communications mode

Message value: -
Drive object: All objects
Reaction: NONE
Acknowledge: NONE
Cause: In the "operational" mode, an attempt was made to change parameters p8700 ... p8737.
Remedy: Change to the "pre-operational" or "stopped" mode.

A08755 CAN: Obj cannot be mapped

Message value: -
Drive object: All objects
Reaction: NONE
Acknowledge: NONE
Cause: The CANopen object is not provided for the Process Data Object (PDO) Mapping.
Remedy: Use a CANopen object intended for the PDO mapping or enter 0.
The following objects can be mapped in the Receive Process Data Object (RPDO) or Transmit Process Data Object (TPDO):
- RPDO: 6040 hex, 6060 hex, 60FF hex, 6071 hex; 5800 hex - 580F hex; 5820 hex - 5827 hex
- TPDO: 6041 hex, 6061 hex, 6063 hex, 6069 hex, 606B hex, 606C hex, 6074 hex; 5810 hex - 581F hex; 5830 hex - 5837 hex
Only sub-index 0 of the specified objects can be mapped.
Note:
As long as A08755 is present, the COB-ID cannot be set to valid.

A08756 CAN: Number of mapped bytes exceeded

Message value: -
Drive object: All objects
Reaction: NONE
Acknowledge: NONE
Cause: The number of bytes of the mapped objects exceeds the telegram size for net data. A max. of 8 bytes is permissible.
Remedy: Map fewer objects or objects with a smaller data type.
See also: p8710, p8711, p8712, p8713, p8714, p8715, p8716, p8717, p8730, p8731, p8732, p8733, p8734, p8735, p8736, p8737

A08757 CAN: Set COB-ID invalid

Message value: -
Drive object: All objects
Reaction: NONE
Acknowledge: NONE
Cause: For online operation, the appropriate COB-ID must be set invalid before mapping.
Example:
Mapping for RPDO 1 should be changed (p8710[0]).
--> set p8700[0] = C00006E0 hex (invalid COB-ID)
--> set p8710[0] as required.
--> p8700[0] enter a valid COB-ID
Remedy: Set the COB-ID to invalid.

A08759 CAN: PDO COB-ID already available

Message value: -
Drive object: All objects
Reaction: NONE
Acknowledge: NONE
Cause: An existing PDO COB-ID was allocated.
Remedy: Select another PDO COB-ID.

A13000 License not adequate

Message value: %1
Drive object: All objects
Reaction: NONE
Acknowledge: NONE
Cause: - for the drive unit, the options that require a license are being used but the licenses are not sufficient.
- an error occurred when checking the existing licenses.

Alarm value (r2124, interpret decimal):
0:
The existing license is not sufficient.
1:
An adequate license was not able to be determined as the memory card with the required licensing data was withdrawn in operation.
2:
An adequate license was not able to be determined as there is no licensing data available on the memory card.
3:
An adequate license was not able to be determined as there is a checksum error in the license key.
4:
An internal error occurred when checking the license.

Remedy: Re alarm value = 0:
Additional licenses are required and these must be activated (p9920, p9921).
Re alarm value = 1:
With the system powered down, re-insert the memory card that matches the system.
Re alarm value = 2:
Enter and activate the license key (p9920, p9921).
Re alarm value = 3:
Compare the license key (p9920) entered with the license key on the certificate of license.
Re-enter the license key and activate (p9920, p9921).
Re alarm value = 4:
- carry out a POWER ON.
- upgrade firmware to later version.
- contact the Hotline.

A13001 Error in license checksum

Message value: -
Drive object: All objects
Reaction: NONE
Acknowledge: NONE
Cause: When checking the checksum of the license key, an error was detected.
Remedy: Compare the license key (p9920) entered with the license key on the certificate of license.
Re-enter the license key and activate (p9920, p9921).

F13010 Licensing function module not licensed

Message value: %1
Drive object: All objects
Reaction: OFF1
Acknowledge: IMMEDIATELY
Cause: At least one function module which is under license does not have a license.
Fault value (r0949, interpret hexadecimal):
Bit x = 1: The corresponding function module does not have a license.
Note:
Refer to p0108 or r0108 for the assignment between the bit number and function module.
Remedy: - enter and activate the license key for function modules under license (p9920, p9921).
- if necessary, de-activate unlicensed function modules (p0108, r0108).
See also: p9920 (Licensing enter license key), p9921 (Licensing activate license key)

F30001 Power unit: Overcurrent

Message value: Fault cause: %1 bin

Drive object: SERVO_S110-CAN, SERVO_S110-DP, SERVO_S110-PN

Reaction: OFF2

Acknowledge: IMMEDIATELY

Cause: The power unit has detected an overcurrent condition.
- closed-loop control is incorrectly parameterized.
- motor has a short-circuit or fault to ground (frame).
- U/f operation: Up ramp set too low.
- U/f operation: Rated motor current is significantly greater than that of the Motor Module.
- infeed: High discharge and post-charging currents for voltage dip.
- infeed: High post-charging currents for overload when motoring and DC link voltage dip.
- infeed: Short-circuit currents at power-up due to the missing line reactor.
- power cables are not correctly connected.
- power cables exceed the maximum permissible length.
- power unit defective.
- line phase interrupted.

Additional causes for a parallel switching device (r0108.15 = 1):
- a power unit has tripped (powered down) due to a ground fault.
- the closed-loop circulating current control is either too slow or has been set too fast.

Fault value (r0949, interpret bitwise binary):
Bit 0: Phase U.
Bit 1: Phase V.
Bit 2: Phase W.
Bit 3: Overcurrent in the DC link.
Note:
Fault value = 0 means that the phase with overcurrent is not recognized (e.g. for blocksize device).

Remedy:
- check the motor data - if required, carry out commissioning.
- check the motor circuit configuration (star-delta)
- U/f operation: Increase up ramp.
- U/f operation: Check the assignment of the rated currents of the motor and Motor Module.
- infeed: Check the line supply quality.
- infeed: Reduce the motor load.
- infeed: Correct connection of the line reactor.
- check the power cable connections.
- check the power cables for short-circuit or ground fault.
- check the length of the power cables.
- replace power unit.
- check the line supply phases.

For a parallel switching device (r0108.15 = 1) the following additionally applies:
- check the ground fault monitoring thresholds (p0287).
- check the setting of the closed-loop circulating current control (p7036, p7037).

F30002 Power unit: DC link voltage overvoltage

Message value: %1

Drive object: SERVO_S110-CAN, SERVO_S110-DP, SERVO_S110-PN

Reaction: OFF2

Acknowledge: IMMEDIATELY

Cause: The power unit has detected overvoltage in the DC link.
- motor regenerates too much energy.
- device connection voltage too high.
- when operating with a Voltage Sensing Module (VSM), the phase assignment L1, L2, L3 at the VSM differs from the phase assignment at the power unit.
- line phase interrupted.

Fault value (r0949, interpret decimal):
DC link voltage at the time of trip [0.1 V].

Remedy:
- increase the ramp-down time
- activate the DC link voltage controller
- use a brake resistor or Active Line Module
- increase the current limit of the infeed or use a larger module (for the Active Line Module)
- check the device supply voltage
- check and correct the phase assignment at the VSM and at the power unit
- check the line supply phases.

See also: p0210 (Drive unit line supply voltage), p1240 (Vdc controller or Vdc monitoring configuration)

F30003 Power unit: DC link voltage undervoltage

Message value: -
Drive object: SERVO_S110-CAN, SERVO_S110-DP, SERVO_S110-PN
Reaction: OFF2
Acknowledge: IMMEDIATELY
Cause: The power unit has detected an undervoltage condition in the DC link.
- line supply failure
- line supply voltage below the permissible value.
- line supply infeed failed or interrupted.
- line phase interrupted.

Note:
The monitoring threshold for undervoltage in the DC link is indicated in r0296.

Remedy:
- check the line supply voltage
- check the line supply infeed and observe the fault messages relating to it (if there are any)
- check the line supply phases.
- check the line supply voltage setting (p0210).
- booksize units: check the setting of p0278.

Note:
The ready signal for the infeed (r0863) must be interconnected to the associated drive inputs (p0864).
See also: p0210 (Drive unit line supply voltage)

F30004 Power unit: Overtemperature heat sink AC inverter

Message value: %1
Drive object: SERVO_S110-CAN, SERVO_S110-DP, SERVO_S110-PN
Reaction: OFF2
Acknowledge: IMMEDIATELY
Cause: The temperature of the power unit heat sink has exceeded the permissible limit value.
- insufficient cooling, fan failure.
- overload.
- ambient temperature too high.
- pulse frequency too high.

Fault value (r0949):
Temperature [1 bit = 0.01 °C].

Remedy:
- check whether the fan is running.
- check the fan elements.
- check whether the ambient temperature is in the permissible range.
- check the motor load.
- reduce the pulse frequency if this is higher than the rated pulse frequency.

Notice:
This fault can only be acknowledged after the alarm threshold for alarm A05000 has been undershot.
See also: p1800 (Pulse frequency setpoint)

F30005 Power unit: Overload I2t

Message value: %1
Drive object: SERVO_S110-CAN, SERVO_S110-DP, SERVO_S110-PN
Reaction: OFF2
Acknowledge: IMMEDIATELY
Cause: The power unit was overloaded (r0036 = 100 %).
- the permissible rated power unit current was exceeded for an inadmissibly long time.
- the permissible load duty cycle was not maintained.
Fault value (r0949, interpret decimal):
I2t [100 % = 16384].
Remedy: - reduce the continuous load.
- adapt the load duty cycle.
- check the motor and power unit rated currents.
See also: r0036 (Power unit overload I2t), r0206 (Rated power unit power), p0307 (Rated motor power)

F30011 Power unit: Line phase failure in main circuit

Message value: -
Drive object: SERVO_S110-CAN, SERVO_S110-DP, SERVO_S110-PN
Reaction: OFF2 (OFF1)
Acknowledge: IMMEDIATELY
Cause: At the power unit, the DC link voltage ripple has exceeded the permissible limit value.
Possible causes:
- A line phase has failed.
- The 3 line phases are inadmissibly unsymmetrical.
- The capacitance of the DC link capacitor forms a resonance frequency with the line inductance and the reactor integrated in the power unit.
- the fuse of a phase of a main circuit has ruptured.
- A motor phase has failed.
Remedy: - check the main circuit fuses.
- Check whether a single-phase load is distorting the line voltages.
- Detune the resonant frequency with the line inductance by using an upstream line reactor.
- Dampen the resonant frequency with the line inductance by switching over the DC link voltage compensation in the software (see p1810) – or increase the smoothing (see p1806). However, this can have a negative impact on the torque ripple at the motor output.
- check the motor feeder cables.

F30012 Power unit: Temperature sensor heat sink wire breakage

Message value: %1
Drive object: SERVO_S110-CAN, SERVO_S110-DP, SERVO_S110-PN
Reaction: OFF1 (OFF2)
Acknowledge: IMMEDIATELY
Cause: The connection to a heat sink temperature sensor in the power unit is interrupted.
Fault value (r0949, interpret hexadecimal):
Bit 0: Module slot (electronics slot)
Bit 1: Air intake
Bit 2: Inverter 1
Bit 3: Inverter 2
Bit 4: Inverter 3
Bit 5: Inverter 4
Bit 6: Inverter 5
Bit 7: Inverter 6
Bit 8: Rectifier 1
Bit 9: Rectifier 2
Remedy: Contact the manufacturer.

F30013 Power unit: Temperature sensor heat sink short-circuit

Message value: %1
Drive object: SERVO_S110-CAN, SERVO_S110-DP, SERVO_S110-PN
Reaction: OFF1 (OFF2)
Acknowledge: IMMEDIATELY
Cause: The heat sink temperature sensor in the power unit is short-circuited.
Fault value (r0949, interpret hexadecimal):
Bit 0: Module slot (electronics slot)
Bit 1: Air intake
Bit 2: Inverter 1
Bit 3: Inverter 2
Bit 4: Inverter 3
Bit 5: Inverter 4
Bit 6: Inverter 5
Bit 7: Inverter 6
Bit 8: Rectifier 1
Bit 9: Rectifier 2
Remedy: Contact the manufacturer.

F30015 (N, A) Power unit: Phase failure motor cable

Message value: -
Drive object: SERVO_S110-CAN, SERVO_S110-DP, SERVO_S110-PN
Reaction: OFF2 (NONE, OFF1, OFF3)
Acknowledge: IMMEDIATELY
Cause: A phase failure in the motor feeder cable was detected.
The signal can also be output in the following case:
- the motor is correctly connected, however the closed-speed control is instable and therefore an oscillating torque is generated.
Note:
Chassis power units do not feature phase failure monitoring.
Remedy: - check the motor feeder cables.
- check the speed controller settings.
Reaction upon N: NONE
Acknowl. upon N: NONE
Reaction upon A: NONE
Acknowl. upon A: NONE

A30016 (N) Power unit: Load supply switched out

Message value: %1
Drive object: SERVO_S110-CAN, SERVO_S110-DP, SERVO_S110-PN
Reaction: NONE
Acknowledge: NONE
Cause: The DC link voltage is too low.
Alarm value (r2124, interpret decimal):
DC link voltage at the time of trip [0.1 V].
Remedy: - switch on load supply.
- check the line supply if necessary.
Reaction upon N: NONE
Acknowl. upon N: NONE

F30017 Power unit: Hardware current limit has responded too often

Message value: Fault cause: %1 bin

Drive object: SERVO_S110-CAN, SERVO_S110-DP, SERVO_S110-PN

Reaction: OFF2

Acknowledge: IMMEDIATELY

Cause: The hardware current limitation in the relevant phase (see A30031, A30032, A30033) has responded too often. The number of times the limit has been exceeded depends on the design and type of power unit.
For infeed units, the following applies:
- closed-loop control is incorrectly parameterized.
- load on the infeed is too high.
- Voltage Sensing Module incorrectly connected.
- line reactor missing or the incorrect type.
- power unit defective.

The following applies to Motor Modules:
- closed-loop control is incorrectly parameterized.
- fault in the motor or in the power cables.
- the power cables exceed the maximum permissible length.
- motor load too high
- power unit defective.

Fault value (r0949, interpret binary):
Bit 0: Phase U
Bit 1: Phase V
Bit 2: Phase W

Remedy: For infeed units, the following applies:
- check the controller settings and reset and identify the controller if necessary (p0340 = 2, p3410 = 5)
- reduce the load and increase the DC-link capacitance or use a higher-rating infeed if necessary
- check the connection of the optional Voltage Sensing Module
- check the connection and technical data of the line reactor
- check the power cables for short-circuit or ground fault.
- replace power unit.

The following applies to Motor Modules:
- check the motor data and if required, recalculate the controller parameters (p0340 = 3). As an alternative, run a motor data identification (p1910 = 1, p1960 = 1).
- check the motor circuit configuration (star-delta).
- check the motor load.
- check the power cable connections.
- check the power cables for short-circuit or ground fault.
- check the length of the power cables.
- replace power unit.

F30020 Power unit: Configuration not supported

Message value: fault cause: %1, additional information: %2

Drive object: SERVO_S110-CAN, SERVO_S110-DP, SERVO_S110-PN

Reaction: OFF2

Acknowledge: IMMEDIATELY

Cause: A configuration is requested that is not supported by the power unit.
Fault value (r0949, interpret hexadecimal):
yyyyxxxx hex: xxxx = fault cause, yyyy = additional information (siemensintern)
xxxx = 0: Autonomous operation is requested but is not supported.
xxxx = 1: The requested DRIVE-CLiQ timing is not permissible.
xxxx = 2: A PM260 has been detected with PS-ASIC version 2. This combination is not supported.
xxxx = 3: Initialization was not able to be successfully completed. It is possible that the Control Unit was withdrawn from the Power Module before or during power-up.
xxxx = 4: The combination of power unit and Control Unit or Control Unit Adapter is not supported.
xxxx = 5: The higher current controller dynamic performance is not supported.

Remedy: Re fault cause = 0:
If required, deactivate an active internal voltage protection (p1231).
Re fault cause = 1:
Update the Control Unit firmware or change the DRIVE-CLiQ topology.
Re fault cause = 2:
Replace the power unit with a PM260 with PS-ASIC version 3 (or higher).
Re fault cause = 3, 4:
Insert a Control Unit or Control Unit Adapter (CUAxx) on an appropriate Power Module and perform a POWER ON for the Control Unit or the Control Units Adapter.
Re fault cause = 5:
- use a booksize format power unit.
- for a Double Motor Module operate the two drive controls with the same current controller sampling time (p0115[0]). Otherwise, the higher current controller dynamics can only be activated on the drive with the longer sampling time.
- If required, de-select the higher current controller dynamic performance (p1810.11 = 0). After deselecting the computing dead time, recalculate the controller gains (p0340 = 4). If required, optimize the speed controller.
See also: p0115 (Sampling times for internal control loops), p1231 (Armature short-circuit / DC braking configuration), p1810 (Modulator configuration)

F30021 Power unit: Ground fault

Message value: %1
Drive object: SERVO_S110-CAN, SERVO_S110-DP, SERVO_S110-PN
Reaction: OFF2
Acknowledge: IMMEDIATELY
Cause: Power unit has detected a ground fault.
- ground fault in the power cables.
- winding fault or ground fault at the motor.
- CT defective.
Additional cause for CU310/CUA31:
- when the brake is applied, this causes the hardware DC current monitoring to respond.
Additional cause for parallel switching devices (r0108.15 = 1):
- the closed-loop circulating current control is either too slow or has been set too fast.
Fault value (r0949, interpret decimal):
Absolute value, total current amplitude [20479 = r0209 x 1.4142].
Note:
For power units, a ground fault is also emulated in r3113.5.
Remedy: - check the power cable connections.
- check the motor.
- check the CT.
The following applies additionally for CU310/CUA31:
- check the cables and contacts of the brake connection (a wire is possibly broken).
For parallel switching devices (r0108.15 = 1) the following additionally applies:
- check the ground fault monitoring thresholds (p0287).
- check the setting of the closed-loop circulating current control (p7036, p7037).
See also: p0287 (Ground fault monitoring thresholds)

F30022 Power unit: Monitoring U_ce

Message value: Fault cause: %1 bin
Drive object: SERVO_S110-CAN, SERVO_S110-DP, SERVO_S110-PN
Reaction: OFF2
Acknowledge: POWER ON
Cause: In the power unit, the monitoring of the collector-emitter voltage (U_ce) of the semiconductor has responded.
Possible causes:
- fiber-optic cable interrupted.
- power supply of the IGBT gating module missing.
- short-circuit at the power unit output.
- defective semiconductor in the power unit.

Fault value (r0949, interpret binary):
Bit 0: Short-circuit in phase U
Bit 1: Short circuit in phase V
Bit 2: Short-circuit in phase W
Bit 3: Light transmitter enable defective
Bit 4: U_ce group fault signal interrupted
See also: r0949 (Fault value)

Remedy:
- check the fiber-optic cable and if required, replace.
- check the power supply of the IGBT gating module (24 V).
- check the power cable connections.
- select the defective semiconductor and replace.

F30024 Power unit: Overtemperature thermal model

Message value: -
Drive object: SERVO_S110-CAN, SERVO_S110-DP, SERVO_S110-PN
Reaction: OFF2
Acknowledge: IMMEDIATELY
Cause: The temperature difference between the heat sink and chip has exceeded the permissible limit value.
- the permissible load duty cycle was not maintained.
- insufficient cooling, fan failure.
- overload.
- ambient temperature too high.
- pulse frequency too high.

See also: r0037

Remedy:
- adapt the load duty cycle.
- check whether the fan is running.
- check the fan elements.
- check whether the ambient temperature is in the permissible range.
- check the motor load.
- reduce the pulse frequency if this is higher than the rated pulse frequency.

F30025 Power unit: Chip overtemperature

Message value: %1
Drive object: SERVO_S110-CAN, SERVO_S110-DP, SERVO_S110-PN
Reaction: OFF2
Acknowledge: IMMEDIATELY
Cause: Chip temperature of the semiconductor has exceeded the permissible limit value.
- the permissible load duty cycle was not maintained.
- insufficient cooling, fan failure.
- overload.
- ambient temperature too high.
- pulse frequency too high.

Fault value (r0949):
Temperature difference between the heat sink and chip [1 Bit = 0.01 °C].

Remedy:
- adapt the load duty cycle.
- check whether the fan is running.
- check the fan elements.
- check whether the ambient temperature is in the permissible range.
- check the motor load.
- reduce the pulse frequency if this is higher than the rated pulse frequency.

Notice:
This fault can only be acknowledged after the alarm threshold for alarm A05001 has been undershot.
See also: r0037

F30027 Power unit: Precharging DC link time monitoring

Message value: Enable signals: %1, Status: %2

Drive object: SERVO_S110-CAN, SERVO_S110-DP, SERVO_S110-PN

Reaction: OFF2

Acknowledge: IMMEDIATELY

Cause: The power unit DC link was not able to be pre-charged within the expected time.

1) There is no line supply voltage connected.

2) The line contactor/line side switch has not been closed.

3) The line supply voltage is too low.

4) Line supply voltage incorrectly set (p0210).

5) The pre-charging resistors are overheated as there were too many pre-charging operations per time unit.

6) The pre-charging resistors are overheated as the DC link capacitance is too high.

7) The pre-charging resistors are overheated because when there is no "ready for operation" (r0863.0) of the infeed unit, power is taken from the DC link.

8) The pre-charging resistors are overheated as the line contactor was closed during the DC link fast discharge through the Braking Module.

9) The DC link has either a ground fault or a short-circuit.

10) The pre-charging circuit is possibly defective (only for chassis units).

11) Infeed is defective and/or fuse has ruptured in the Motor Module (only Booksize units).

Fault value (r0949, interpret binary):

yyyyxxxx hex:

yyyy = power unit state

0: Fault status (wait for OFF and fault acknowledgement).

1: Restart inhibit (wait for OFF).

2: Overvoltage condition detected -> change into the fault state.

3: Undervoltage condition detected -> change into the fault state.

4: Wait for bridging contactor to open -> change into the fault state.

5: Wait for bridging contactor to open -> change into restart inhibit.

6: Commissioning.

7: Ready for pre-charging.

8: Pre-charging started, DC link voltage less than the minimum switch-on voltage.

9: Pre-charging, DC link voltage end of pre-charging still not detected.

10: Wait for the end of the de-bounce time of the main contactor after pre-charging has been completed.

11: Pre-charging completed, ready for pulse enable.

12: It was detected that the STO terminal was energized at the power unit.

xxxx = Missing internal enable signals, power unit (inverted bit-coded, FFFF hex -> all internal enable signals available)

Bit 0: Power supply of the IGBT gating shut down.

Bit 1: Ground fault detected.

Bit 2: Peak current intervention.

Bit 3: I2t exceeded.

Bit 4. Thermal model overtemperature calculated.

Bit 5: (heat sink, gating module, power unit) overtemperature measured.

Bit 6: Reserved.

Bit 7: Overvoltage detected.

Bit 8: Power unit has completed pre-charging, ready for pulse enable.

Bit 9: STO terminal missing.

Bit 10: Overcurrent detected.

Bit 11: Armature short-circuit active.

Bit 12: DRIVE-CLiQ fault active.

Bit 13: Vce fault detected, transistor de-saturated due to overcurrent/short-circuit.

Bit 14: Undervoltage detected.

See also: p0210 (Drive unit line supply voltage)

Remedy: In general:
- check the line supply voltage at the input terminals.
- check the line supply voltage setting (p0210).

For booksize drive units, the following applies:
- wait (approx. 8 minutes) until the pre-charging resistors have cooled down. For this purpose, preferably disconnect the infeed unit from the line supply.

Re 5):
- carefully observe the permissible pre-charging frequency (refer to the appropriate Equipment Manual).

Re 6):
- check the total capacitance of the DC link and reduce in accordance with the maximum permissible DC-link capacitance if necessary (refer to the appropriate Equipment Manual)

Re 7):
- interconnect the ready-for-operation signal from the infeed unit (r0863.0) in the enable logic of the drives connected to this DC link

Re 8):
- check the connections of the external line contactor. The line contactor must be open during DC-link fast discharge.

Re 9):
- check the DC link for ground faults or short circuits.

Re 11):
- Check the DC link voltage of the infeed (r0070) and Motor Modules (r0070).

If the DC link voltage generated by the infeed (or external) is not displayed for the Motor Modules (r0070), then a fuse has ruptured in the Motor Module.

See also: p0210 (Drive unit line supply voltage)

A30031 Power unit: Hardware current limiting in phase U

Message value: -

Drive object: SERVO_S110-CAN, SERVO_S110-DP, SERVO_S110-PN

Reaction: NONE

Acknowledge: NONE

Cause: Hardware current limit for phase U responded. The pulsing in this phase is inhibited for one pulse period.
- closed-loop control is incorrectly parameterized.
- fault in the motor or in the power cables.
- the power cables exceed the maximum permissible length.
- motor load too high
- power unit defective.

Note:
Alarm A30031 is always output if, for a Power Module, the hardware current limiting of phase U, V or W responds.

Remedy:
- check the motor data and if required, recalculate the controller parameters (p0340 = 3). As an alternative, run a motor data identification (p1910 = 1, p1960 = 1).
- check the motor circuit configuration (star-delta)
- check the motor load.
- check the power cable connections.
- check the power cables for short-circuit or ground fault.
- check the length of the power cables.

A30032 Power unit: Hardware current limiting in phase V

Message value: -

Drive object: SERVO_S110-CAN, SERVO_S110-DP, SERVO_S110-PN

Reaction: NONE

Acknowledge: NONE

Cause: Hardware current limit for phase V responded. The pulsing in this phase is inhibited for one pulse period.
- closed-loop control is incorrectly parameterized.
- fault in the motor or in the power cables.
- the power cables exceed the maximum permissible length.
- motor load too high
- power unit defective.

Note:
Alarm A30031 is always output if, for a Power Module, the hardware current limiting of phase U, V or W responds.

Remedy: Check the motor data and if required, recalculate the controller parameters (p0340 = 3). As an alternative, run a motor data identification (p1910 = 1, p1960 = 1).
- check the motor circuit configuration (star-delta)
- check the motor load.
- check the power cable connections.
- check the power cables for short-circuit or ground fault.
- check the length of the power cables.

A30033 Power unit: Hardware current limiting in phase W

Message value: -

Drive object: SERVO_S110-CAN, SERVO_S110-DP, SERVO_S110-PN

Reaction: NONE

Acknowledge: NONE

Cause: Hardware current limit for phase W responded. The pulsing in this phase is inhibited for one pulse period.
- closed-loop control is incorrectly parameterized.
- fault in the motor or in the power cables.
- the power cables exceed the maximum permissible length.
- motor load too high
- power unit defective.

Note:
Alarm A30031 is always output if, for a Power Module, the hardware current limiting of phase U, V or W responds.

Remedy:
- check the motor data and if required, recalculate the controller parameters (p0340 = 3). As an alternative, run a motor data identification (p1910 = 1, p1960 = 1).
- check the motor circuit configuration (star-delta)
- check the motor load.
- check the power cable connections.
- check the power cables for short-circuit or ground fault.
- check the length of the power cables.

A30034 Power unit: Internal overtemperature

Message value: %1

Drive object: SERVO_S110-CAN, SERVO_S110-DP, SERVO_S110-PN

Reaction: NONE

Acknowledge: NONE

Cause: The alarm threshold for internal overtemperature has been reached.
If the temperature inside the unit continues to increase, fault F30036 may be triggered.
- ambient temperature might be too high.
- insufficient cooling, fan failure.

Fault value (r0949, interpret binary):
Bit 0 = 1: Control electronics range.
Bit 1 = 1: Power electronics range.

Remedy:
- check the ambient temperature.
- check the fan for the inside of the unit.

F30035 Power unit: Air intake overtemperature

Message value: %1

Drive object: SERVO_S110-CAN, SERVO_S110-DP, SERVO_S110-PN

Reaction: OFF1 (OFF2)

Acknowledge: IMMEDIATELY

Cause: The air intake in the power unit has exceeded the permissible temperature limit.
For air-cooled power units, the temperature limit is at 55 °C.
- ambient temperature too high.
- insufficient cooling, fan failure.

Fault value (r0949, interpret decimal):
Temperature [0.01 °C].

Remedy:
- check whether the fan is running.
- check the fan elements.
- check whether the ambient temperature is in the permissible range.

Notice:
This fault can only be acknowledged after the alarm threshold for alarm A05002 has been undershot.

F30036 Power unit: Internal overtemperature

Message value: %1
Drive object: All objects
Reaction: OFF2
Acknowledge: IMMEDIATELY
Cause: For chassis power units, the following applies:
The temperature inside the drive converter has exceeded the permissible temperature limit.
- insufficient cooling, fan failure.
- overload.
- ambient temperature too high.

Fault value (r0949, interpret binary):
Bit 0 = 1: Overtemperature in the control electronics range.
Bit 1 = 1: Overtemperature in the power electronics range.

Remedy:
- check whether the fan is running.
- check the fan elements.
- check whether the ambient temperature is in the permissible range.

Notice:
This fault can only be acknowledged once the permissible temperature limit minus 5 K has been fallen below.

F30037 Power unit: Rectifier overtemperature

Message value: %1
Drive object: SERVO_S110-CAN, SERVO_S110-DP, SERVO_S110-PN
Reaction: OFF2
Acknowledge: IMMEDIATELY
Cause: The temperature in the rectifier of the power unit has exceeded the permissible temperature limit.
- insufficient cooling, fan failure.
- overload.
- ambient temperature too high.
- line supply phase failure.

Fault value (r0949, interpret decimal):
Temperature [0.01 °C].

Remedy:
- check whether the fan is running.
- check the fan elements.
- check whether the ambient temperature is in the permissible range.
- check the motor load.
- check the line supply phases.

Notice:
This fault can only be acknowledged after the alarm threshold for alarm A05004 has been undershot.

F30040 Power unit: Undervolt 24 V

Message value: %1
Drive object: SERVO_S110-CAN, SERVO_S110-DP, SERVO_S110-PN
Reaction: OFF2
Acknowledge: IMMEDIATELY (POWER ON)
Cause: Failure of the 24 V power supply for the power unit.
- The undervoltage threshold was undershot for longer than 3 ms.

Fault value (r0949, interpret decimal):
24 V voltage [0.1 V].

Remedy: - check the 24 V DC power supply of the power unit.
- carry out a POWER ON (power off/on) for the component.

A30041 (F) Power unit: Undervoltage 24 V alarm

Message value: %1
Drive object: SERVO_S110-CAN, SERVO_S110-DP, SERVO_S110-PN
Reaction: NONE
Acknowledge: NONE
Cause: 24 V power supply fault for the power unit.
- the 16 V threshold was undershot..
Alarm value (r2124, interpret decimal):
24 V voltage [0.1 V].

Remedy: - check the 24 V DC power supply of the power unit.
- carry out a POWER ON (power off/on) for the component.

Reaction upon F: NONE (OFF1, OFF2)
Acknowl. upon F: IMMEDIATELY (POWER ON)

A30042 Power unit: Fan operating time reached or exceeded

Message value: %1
Drive object: SERVO_S110-CAN, SERVO_S110-DP, SERVO_S110-PN
Reaction: NONE
Acknowledge: NONE
Cause: The maximum operating time of the fan in the power unit is set in p0252.
This message indicates the following:
Fault value (r0949, interpret decimal):
0: The maximum fan operating time is 500 hours.
1: The maximum fan operating time has been exceeded.

Remedy: Replace the fan in the power unit and reset the operating hours counter to 0 (p0251 = 0).
See also: p0251 (Operating hours counter power unit fan), p0252 (Maximum operating time power unit fan)

F30043 Power unit: Overvolt 24 V

Message value: -
Drive object: SERVO_S110-CAN, SERVO_S110-DP, SERVO_S110-PN
Reaction: OFF2
Acknowledge: POWER ON
Cause: The following applies for CU31x:
Overvoltage of the 24 V power supply for the power unit.
- the 31.5 V threshold was exceeded for more than 3 ms.
Fault value (r0949, interpret decimal):
24 V voltage [0.1 V].

Remedy: Check the 24 V DC power supply of the power unit.

A30044 (F) Power unit: Overvoltage 24 V alarm

Message value: -
Drive object: SERVO_S110-CAN, SERVO_S110-DP, SERVO_S110-PN
Reaction: NONE
Acknowledge: NONE
Cause: The following applies for CU31x:
24 V power supply fault for the power unit.
- the 32.0 V threshold was exceeded.
Alarm value (r2124, interpret decimal):
24 V voltage [0.1 V].

Remedy: Check the 24 V DC power supply of the power unit.

Reaction upon F: NONE (OFF1, OFF2, OFF3)
Acknowl. upon F: IMMEDIATELY (POWER ON)

F30045 Power unit: Supply undervoltage

Message value: %1
Drive object: SERVO_S110-CAN, SERVO_S110-DP, SERVO_S110-PN
Reaction: OFF2
Acknowledge: IMMEDIATELY (POWER ON)
Cause: Power supply fault in the power unit.
- The voltage monitor signals an undervoltage fault on the module.
The following applies for CU31x:
- the voltage monitoring on the DAC board signals an undervoltage fault on the module.
Remedy:
- check the 24 V DC voltage supply to power unit.
- carry out a POWER ON (power off/on) for the component.
- replace the module if necessary.

A30046 (F) Power unit: Undervoltage alarm

Message value: %1
Drive object: SERVO_S110-CAN, SERVO_S110-DP, SERVO_S110-PN
Reaction: NONE
Acknowledge: NONE
Cause: Before the last restart, a problem occurred at the power unit power supply.
- the voltage monitor in the internal FPGA of the PSA signals an undervoltage fault on the module.
Fault value (r0949):
Register value of the voltage fault register.
Remedy:
- check the 24 V DC voltage supply to power unit.
- carry out a POWER ON (power off/on) for the component.
- replace the module if necessary.

Reaction upon F: NONE (OFF1, OFF2)
Acknowl. upon F: IMMEDIATELY (POWER ON)

A30048 Power unit: External fan faulty

Message value: -
Drive object: SERVO_S110-CAN, SERVO_S110-DP, SERVO_S110-PN
Reaction: NONE
Acknowledge: NONE
Cause: The feedback signal from the external fan indicates a fault.
- fan faulty, blocked.
- feedback signal inaccurate.
Remedy:
- check the external fan and replace if necessary.
- if you are using an external fan with feedback, check its wiring (X12.2 or X13.2).
Note:
If you are using an external fan without feedback, check that the feedback terminal wiring on the power unit is connected to ground and make this connection if necessary (X12.1/2 or X13.1/2).

A30049 Power unit: Internal fan faulty

Message value: -
Drive object: SERVO_S110-CAN, SERVO_S110-DP, SERVO_S110-PN
Reaction: NONE
Acknowledge: NONE
Cause: The internal fan has failed.
Remedy: Check the internal fan and replace if necessary.

F30050 Power unit: 24 V supply overvoltage

Message value: -
Drive object: SERVO_S110-CAN, SERVO_S110-DP, SERVO_S110-PN
Reaction: OFF2
Acknowledge: POWER ON
Cause: The voltage monitor signals an overvoltage fault on the module.
Remedy: - check the 24 V power supply.
- replace the module if necessary.

F30052 EEPROM data error

Message value: %1
Drive object: SERVO_S110-CAN, SERVO_S110-DP, SERVO_S110-PN
Reaction: NONE
Acknowledge: POWER ON
Cause: EEPROM data error of the power unit module.
Fault value (r0949, interpret hexadecimal):
0: The EEPROM data read in from the power unit module is inconsistent.
1: EEPROM data is not compatible to the firmware of the power unit application.
Additional values:
Only for internal Siemens troubleshooting.
Remedy: For fault value = 0:
Replace the power unit module or update the EEPROM data.
For fault value = 1:
The following applies for CU31x and CUA31:
Update the firmware \SIEMENS\SINAMICS\CODE\SAC\cu31xi.ufw (cua31.ufw)

A30054 (F, N) Power unit: Undervoltage when opening the brake

Message value: %1
Drive object: SERVO_S110-CAN, SERVO_S110-DP, SERVO_S110-PN
Reaction: NONE
Acknowledge: NONE
Cause: When the brake is being opened, it is detected that the power supply voltage is less than 24 V - 10% = 21.6V.
Alarm value (r2124, interpret decimal):
Supply voltage fault [0.1 V].
Example:
Alarm value = 212 --> voltage = 21.2 V
Remedy: Check the 24V power supply for stability and value.
Reaction upon F: NONE (OFF1, OFF2, OFF3)
Acknowl. upon F: IMMEDIATELY
Reaction upon N: NONE
Acknowl. upon N: NONE

F30055 Power unit: Braking chopper overcurrent

Message value: -
Drive object: SERVO_S110-CAN, SERVO_S110-DP, SERVO_S110-PN
Reaction: OFF2
Acknowledge: IMMEDIATELY
Cause: An overcurrent condition has occurred in the braking chopper.
Remedy: - check whether the braking resistor has a short circuit.
- for an external braking resistor, check whether the resistor may have been dimensioned too small.
Note:
The braking chopper is only enabled again at pulse enable after the fault has been acknowledged.

F30060 (A) Pre-charge contactor state monitoring

Message value: Fault cause: %1 bin
Drive object: SERVO_S110-CAN, SERVO_S110-DP, SERVO_S110-PN
Reaction: OFF2 (NONE, OFF1)
Acknowledge: IMMEDIATELY (POWER ON)
Cause: At the end of the monitoring time (p0255[0]), the actual state of the pre-charge contactor does not match the desired state.
Bit 0: Monitoring time exceeded.
Bit 1: Contactor opened during operation.
Bit 2: Contactor closed in OFF state.
Remedy: - check the monitoring time setting (p0255[0]).
- check the contactor wiring and activation.
- replace the contactor.
Reaction upon A: NONE
Acknowl. upon A: NONE

F30061 (A) Bridging contactor monitoring

Message value: Fault cause: %1 bin
Drive object: SERVO_S110-CAN, SERVO_S110-DP, SERVO_S110-PN
Reaction: OFF2 (NONE, OFF1)
Acknowledge: IMMEDIATELY (POWER ON)
Cause: At the end of the monitoring time (p0255[1]), the actual state of the bridging contactor does not match the desired state.
Fault value (r0949, interpret bitwise binary):
Bit 0: Monitoring time exceeded.
Bit 1: Contactor opened during operation.
Bit 2: Contactor closed in OFF state.
Remedy: - check the monitoring time setting (p0255[1]).
- check the contactor wiring and activation.
- replace the contactor.
Reaction upon A: NONE
Acknowl. upon A: NONE

F30070 Cycle requested by the power unit module not supported

Message value: %1
Drive object: SERVO_S110-CAN, SERVO_S110-DP, SERVO_S110-PN
Reaction: OFF2
Acknowledge: IMMEDIATELY
Cause: A cycle is requested that is not supported by the power unit.
Fault value (r0949, interpret hexadecimal):
0: The current control cycle is not supported.
1: The DRIVE-CLiQ cycle is not supported.
2: Internal timing problem (clearance between RX and TX instants too low).
3: Internal timing problem (TX instant too early).
Remedy: The power unit only supports the following cycles:
62.5 µs, 125 µs, 250 µs and 500 µs
For fault value = 0:
Set a permitted current control cycle.
For fault value = 1:
Set a permitted DRIVE-CLiQ cycle.
Re fault value = 2, 3:
Contact the manufacturer (you may have an incompatible firmware version).

F30071 No new actual values received from the power unit module

Message value: -
Drive object: SERVO_S110-CAN, SERVO_S110-DP, SERVO_S110-PN
Reaction: OFF2
Acknowledge: IMMEDIATELY
Cause: The number of actual value telegrams from the power unit module that have failed has exceeded the permissible number.
Remedy: Check the interface (adjustment and locking) to the power unit module.

F30072 Setpoints are no longer being transferred to the power unit

Message value: -
Drive object: SERVO_S110-CAN, SERVO_S110-DP, SERVO_S110-PN
Reaction: OFF2
Acknowledge: IMMEDIATELY
Cause: The following applies for CU31x and CUA31:
More than one setpoint telegram was not able to be transferred to the power unit module.
Remedy: The following applies for CU31x and CUA31:
Check the interface (adjustment and locking) to the power unit module.

A30073 (N) Actual value/setpoint preprocessing no longer synchronous

Message value: -
Drive object: SERVO_S110-CAN, SERVO_S110-DP, SERVO_S110-PN
Reaction: NONE
Acknowledge: NONE
Cause: Communication with the power unit module is no longer in synchronism with the current control cycle.
Remedy: Wait until synchronization is re-established.
Reaction upon N: NONE
Acknowl. upon N: NONE

F30074 (A) Communication error between the Control Unit and Power Module

Message value: %1
Drive object: SERVO_S110-CAN, SERVO_S110-DP, SERVO_S110-PN
Reaction: NONE
Acknowledge: IMMEDIATELY
Cause: Communications between the Control Unit (CU) and Power Module (PM) via the interface no longer possible. The CU may have been withdrawn or is incorrectly inserted.
Fault value (r0949, interpret hexadecimal):
0 hex:
The Control Unit was withdrawn from the Power Module during operation.
1 hex:
The Control Unit was withdrawn from the Power Module during operation, although the encoderless safe motion monitoring functions are enabled. This is not supported. After re-inserting the Control Unit in operation, communications to the Power Module no longer possible.
20A hex:
The Control Unit was inserted on a Power Module, which has another code number.
20B hex:
The Control Unit was inserted on a Power Module, which although it has the same code number, has a different serial number.
601 hex:
The Control Unit was inserted on a Power Module, whose power/performance class (chassis unit) is not supported.
Remedy: Reinsert the Control Unit (CU) or the Control Unit Adapter (CUAxx) onto the original Power Module and continue operation. If required, carry out a POWER ON for the CU and/or the CUA.
Reaction upon A: NONE
Acknowl. upon A: NONE

F30080 Power unit: Current increasing too quickly

Message value: Fault cause: %1 bin
Drive object: All objects
Reaction: OFF2
Acknowledge: IMMEDIATELY
Cause: The power unit has detected an excessive rate of rise in the overvoltage range.
- closed-loop control is incorrectly parameterized.
- motor has a short-circuit or fault to ground (frame).
- U/f operation: Up ramp set too low.
- U/f operation: Rated motor current is significantly greater than that of the Motor Module.
- power cables are not correctly connected.
- power cables exceed the maximum permissible length.
- power unit defective.

Fault value (r0949, interpret bitwise binary):
Bit 0: Phase U.
Bit 1: Phase V.
Bit 2: Phase W.

Remedy:
- check the motor data - if required, carry out commissioning.
- check the motor circuit configuration (star-delta)
- U/f operation: Increase up ramp.
- U/f operation: Check the assignment of the rated currents of the motor and Motor Module.
- check the power cable connections.
- check the power cables for short-circuit or ground fault.
- check the length of the power cables.
- replace power unit.

F30081 Power unit: Switching operations too frequent

Message value: Fault cause: %1 bin
Drive object: All objects
Reaction: OFF2
Acknowledge: IMMEDIATELY
Cause: The power unit has executed too many switching operations for current limitation.
- closed-loop control is incorrectly parameterized.
- motor has a short-circuit or fault to ground (frame).
- U/f operation: Up ramp set too low.
- U/f operation: Rated motor current is significantly greater than that of the Motor Module.
- power cables are not correctly connected.
- power cables exceed the maximum permissible length.
- power unit defective.

Fault value (r0949, interpret bitwise binary):
Bit 0: Phase U.
Bit 1: Phase V.
Bit 2: Phase W.

Remedy:
- check the motor data - if required, carry out commissioning.
- check the motor circuit configuration (star-delta)
- U/f operation: Increase up ramp.
- U/f operation: Check the assignment of the rated currents of the motor and Motor Module.
- check the power cable connections.
- check the power cables for short-circuit or ground fault.
- check the length of the power cables.
- replace power unit.

F30105 PU: Actual value sensing fault

Message value: -
Drive object: SERVO_S110-CAN, SERVO_S110-DP, SERVO_S110-PN
Reaction: OFF2
Acknowledge: IMMEDIATELY
Cause: At least one incorrect actual value channel was detected on the Power Stack Adapter (PSA).
The incorrect actual value channels are displayed in the following diagnostic parameters.
Remedy: Evaluate the diagnostic parameters.
If the actual value channel is incorrect, check the components and if required, replace.

F30314 Power unit: 24 V power supply overloaded by PM

Message value: -
Drive object: SERVO_S110-CAN, SERVO_S110-DP, SERVO_S110-PN
Reaction: OFF2
Acknowledge: IMMEDIATELY (POWER ON)
Cause: The 24 V power supply through the Power Module (PM) is overloaded.
An external 24 V power supply via X124 on the Control Unit is not connected.
Remedy: Connect an external 24 V power supply via X124 at the Control Unit.

A30315 (F) Power unit: 24 V power supply overloaded by PM

Message value: -
Drive object: SERVO_S110-CAN, SERVO_S110-DP, SERVO_S110-PN
Reaction: NONE
Acknowledge: NONE
Cause: The 24 V power supply through the Power Module (PM) is overloaded.
An external 24 V power supply via X124 on the Control Unit is not connected.
Remedy: Connect an external 24 V power supply via X124 at the Control Unit.
Reaction upon F: NONE (OFF1, OFF2, OFF3)
Acknowl. upon F: IMMEDIATELY (POWER ON)

A30502 Power unit: DC link overvoltage

Message value: %1
Drive object: SERVO_S110-CAN, SERVO_S110-DP, SERVO_S110-PN
Reaction: NONE
Acknowledge: NONE
Cause: The power unit has detected overvoltage in the DC link on a pulse inhibit.
- device connection voltage too high.
- line reactor incorrectly dimensioned.
Fault value (r0949, interpret decimal):
DC link voltage [1 bit = 100 mV].
See also: r0070 (Actual DC link voltage)
Remedy: - check the device supply voltage (p0210).
- check the dimensioning of the line reactor.
See also: p0210 (Drive unit line supply voltage)

F30600 SI MM: STOP A initiated

Message value: %1
Drive object: SERVO_S110-CAN, SERVO_S110-DP, SERVO_S110-PN
Reaction: OFF2
Acknowledge: IMMEDIATELY (POWER ON)
Cause: The "Safety Integrated" function integrated on the Motor Module (MM) has detected a fault and initiated STOP A (pulse suppression via the safety shutdown path of the Motor Module).
- forced checking procedure of the safety shutdown path of the Motor Module unsuccessful.
- subsequent response to fault F30611 (defect in a monitoring channel).

Fault value (r0949, interpret decimal):
0: Stop request from the Control Unit.
1005: Pulses suppressed although STO not selected and there is no internal STOP A present.
1010: Pulses enabled although STO is selected or an internal STOP A is present.
1020: Internal software error in the "Internal voltage protection" function. The "internal voltage protection" function is withdrawn. A STOP A that cannot be acknowledged is initiated.
9999: Subsequent response to fault F30611.

Remedy:
- select Safe Torque Off and de-select again.
- replace the Motor Module involved.

For fault value = 1020:
- carry out a POWER ON (power off/on) for all components.
- upgrade the Motor Module software.
- replace the Motor Module.

For fault value = 9999:
- carry out diagnostics for fault F30611.

Note:
CU: Control Unit
MM: Motor Module
SI: Safety Integrated
STO: Safe Torque Off / SH: Safe standstill

F30611 SI MM: Defect in a monitoring channel

Message value: %1

Drive object: SERVO_S110-CAN, SERVO_S110-DP, SERVO_S110-PN

Reaction: NONE (OFF1, OFF2, OFF3)

Acknowledge: IMMEDIATELY (POWER ON)

Cause: The "Safety Integrated" function integrated in the drive in the Motor Module (MM) has detected a fault in the crosswise data comparison between the Control Unit (CU) and MM and initiated a STOP F.

As a result of this fault, after the parameterized transition has expired (p9858), fault F30600 is output (SI MM: STOP A initiated).

Fault value (r0949, interpret decimal):
0: Stop request from the Control Unit.
1 ... 999:
Number of the cross-compared data that resulted in this fault. This number is also displayed in r9895.
1: SI monitoring clock cycle (r9780, r9880).
2: SI enable safety functions (p9601, p9801). Crosswise data comparison is only carried out for the supported bits.
3: SI SGE changeover tolerance time (p9650, p9850).
4: SI transition period STOP F to STOP A (p9658, p9858).
5: SI enable Safe Brake Control (p9602, p9802).
6: SI Motion enable, safety-relevant functions (p9501, internal value).
7: SI pulse suppression delay time for Safe Stop 1 (p9652, p9852).
8: SI PROFIsafe address (p9610, p9810).
9: SI debounce time for STO/SBC/SS1 (MM) (p9651, p9851).
10: SI delay time for pulse suppression for ESR (p9697, p9897).
11: SI Safe Brake Adapter mode, BICO interconnection (p9621, p9821).
12: SI Safe Brake Adapter relay ON time (p9622[0], p9822[0]).
13: SI Safe Brake Adapter relay OFF time (p9622[1], p9822[1]).
1000: Watchdog timer has expired. Within the time of approx. 5 x p9850 too many switching operations have occurred at the safety-related inputs of the Control Unit, or STO (also as subsequent response) was initiated too frequently via PROFIsafe/TM54F.
1001, 1002: Initialization error, change timer / check timer.
1950: Module temperature outside the permissible temperature range.
1951: Module temperature not plausible.
2000: Status of the STO selection on the Control Unit and Motor Module are different.
2001: Feedback signal for safe pulse suppression on the Control Unit and Motor Module are different.
2002: Status of the delay timer SS1 on the Control Unit and Motor Module are different.

6000 ... 6999:
Error in the PROFIsafe control.
For these fault values, the failsafe control signals (failsafe values) are transferred to the safety functions.
The significance of the individual message values is described in safety message C01711 of the Control Unit.

Remedy: Re fault value = 1 ... 5 and 7 ... 999:
- check the cross data comparison that resulted in a STOP F.
- carry out a POWER ON (power off/on) for all components.
- upgrade the Motor Module software.
- upgrade the Control Unit software.

For fault value = 6:
- carry out a POWER ON (power off/on) for all components.
- upgrade the Motor Module software.
- upgrade the Control Unit software.

For fault value = 1000:
- check the wiring of the safety-relevant inputs (SGE) on the Control Unit (contact problems).
- PROFIsafe: Remove contact problems/faults at the PROFIBUS master/PROFINET controller. - check the wiring of the failsafe inputs at the TM54F (contact problems).

Re fault value = 1001, 1002:
- carry out a POWER ON (power off/on) for all components.
- upgrade the Motor Module software.
- upgrade the Control Unit software.

Re fault value = 2000, 2001, 2002:
- check the tolerance time SGE changeover and if required, increase the value (p9650/p9850, p9652/p9852).
- check the wiring of the safety-relevant inputs (SGE) (contact problems).
- check the cause of the STO selection in r9772. When the SMM functions are active (p9501 = 1), STO can also be selected using these functions.
- replace the Motor Module involved.

Re fault value = 6000 ... 6999:
Refer to the description of the message values in safety message C01711.

Note:
CU: Control Unit
MM: Motor Module
SGE: Safety-relevant input
SI: Safety Integrated
SMM: Safe Motion Monitoring
SS1: Safe Stop 1 (corresponds to Stop Category 1 acc. to EN60204)
STO: Safe Torque Off / SH: Safe standstill
ESR: Extended Stop and Retract

N30620 (F, A) SI MM: Safe Torque Off active

Message value: -
Drive object: SERVO_S110-CAN, SERVO_S110-DP, SERVO_S110-PN
Reaction: NONE
Acknowledge: NONE
Cause: The "Safe Torque Off" function was selected on the Motor Module (MM) via the input terminal and is active.
Note:
This message does not result in a safety stop response.
Remedy: Not necessary.
Note:
MM: Motor Module
SI: Safety Integrated
STO: Safe Torque Off / SH: Safe standstill
Reaction upon F: OFF2
Acknowl. upon F: IMMEDIATELY (POWER ON)

Reaction upon A: NONE
Acknowl. upon A: NONE

N30621 (F, A) SI MM: Safe Stop 1 active

Message value: -
Drive object: SERVO_S110-CAN, SERVO_S110-DP, SERVO_S110-PN
Reaction: NONE
Acknowledge: NONE
Cause: The "Safe Stop 1" function (SS1) was selected on the Motor Module (MM) and is active.
Note:
This message does not result in a safety stop response.
Remedy: Not necessary.
Note:
MM: Motor Module
SI: Safety Integrated
SS1: Safe Stop 1 (corresponds to Stop Category 1 acc. to EN60204)
Reaction upon F: OFF3
Acknowl. upon F: IMMEDIATELY (POWER ON)
Reaction upon A: NONE
Acknowl. upon A: NONE

F30625 SI MM: Sign-of-life error in safety data

Message value: %1
Drive object: SERVO_S110-CAN, SERVO_S110-DP, SERVO_S110-PN
Reaction: OFF2
Acknowledge: IMMEDIATELY (POWER ON)
Cause: The "Safety Integrated" function integrated in the drive on the Motor Module (MM) has detected an error in the sign-of-life of the safety data between the Control Unit (CU) and MM and initiated a STOP A.
- there is either a DRIVE-CLiQ communication error or communication has failed.
- a time slice overflow of the safety software has occurred.
Fault value (r0949, interpret decimal):
Only for internal Siemens troubleshooting.
Remedy: - select Safe Torque Off and de-select again.
- carry out a POWER ON (power off/on) for all components.
- check whether there is a DRIVE-CLiQ communication error between the Control Unit and the Motor Module involved and, if required, carry out a diagnostics routine for the faults identified.
- de-select all drive functions that are not absolutely necessary.
- reduce the number of drives.
- check the electrical cabinet design and cable routing for EMC compliance
Note:
CU: Control Unit
MM: Motor Module
SI: Safety Integrated

F30630 SI MM: Brake control error

Message value: %1
Drive object: SERVO_S110-CAN, SERVO_S110-DP, SERVO_S110-PN
Reaction: OFF2
Acknowledge: IMMEDIATELY (POWER ON)
Cause: The "Safety Integrated" function integrated in the drive on the Motor Module (MM) has detected a brake control error and initiated a STOP A.

Fault value (r0949, interpret decimal):

10:

Fault in "open holding brake" operation.

- Parameter p1278 incorrectly set.
- No brake connected or wire breakage (check whether brake releases for p1278 = 1 and p9602/p9802 = 0 (SBC de-activated)).
- Ground fault in brake cable.

30:

Fault in "close holding brake" operation.

- No brake connected or wire breakage (check whether brake releases for p1278 = 1 and p9602/p9802 = 0 (SBC de-activated)).
- Short-circuit in brake winding.

40:

Fault in "brake closed" state.

60, 70:

Fault in the brake control circuit of the Control Unit or communication fault between the Control Unit and Motor Module (brake control).

81: SafeBrakeAdapter: Fault in "brake closed" state.

82: SafeBrakeAdapter: Fault in "open brake" state.

83: SafeBrakeAdapter: Fault in "close brake" state.

84,85:

SafeBrakeAdapter: Fault in the brake control circuit of the Control Unit or communication fault between Control Unit and Motor Module (brake control).

Note:

The following causes may apply to fault values:

- motor cable is not shielded correctly.
- defect in control circuit of the Motor Module.

Remedy:

- check parameter p1278 (for SBC, only p1278 = 0 is permissible).
- select Safe Torque Off and de-select again.
- check the motor holding brake connection.
- check the function of the motor holding brake.
- check whether there is a DRIVE-CLiQ communication error between the Control Unit and the Motor Module involved and, if required, carry out a diagnostics routine for the faults identified.
- check that the electrical cabinet design and cable routing are in compliance with EMC regulations (e.g. shield of the motor cable and brake conductors are connected with the shield connecting plate and the motor connectors are tightly screwed to the housing).
- replace the Motor Module involved.

Operation with Safe Brake Module or Safe Brake Adapter:

- check the Safe Brake Module or Safe Brake Adapter connection.
- Replace the Safe Brake Module or Safe Brake Adapter.

Note:

MM: Motor Module

SBC: Safe Brake Control

SI: Safety Integrated

A30640 (F) SI MM: Fault in the shutdown path of the second channel

Message value: %1

Drive object: SERVO_S110-CAN, SERVO_S110-DP, SERVO_S110-PN

Reaction: NONE

Acknowledge: NONE

Cause: The Motor Module has detected a communication error with the higher-level control or the TM54F to transfer the safety-relevant information or there is a communication error between Motor Modules connected in parallel.

Note:

This fault results in a STOP A that can be acknowledged.

Fault value (r0949, interpret decimal):

Only for internal Siemens troubleshooting.

Remedy: For the higher-level control, the following applies:
- check the PROFIsafe address in the higher-level control and Motor Modules and if required, align.
- save all parameters (p0977 = 1).
- carry out a POWER ON (power off/on) for all components.

For TM54F, carry out the following steps:
- start the copy function for the node identifier (p9700 = 1D hex).
- acknowledge hardware CRC (p9701 = EC hex).
- save all parameters (p0977 = 1).
- carry out a POWER ON (power off/on) for all components.

For a parallel connection:
- check the PROFIsafe address in the Control Unit and Motor Module and if required, align.
- save all parameters (p0977 = 1).
- carry out a POWER ON (power off/on) for all components.

The following generally applies:
- upgrade the Motor Module software.

Note:
MM: Motor Module
SI: Safety Integrated
See also: p9810 (SI PROFIsafe address (processor 2))

Reaction upon F: NONE (OFF2)
Acknowl. upon F: IMMEDIATELY (POWER ON)

F30649 SI MM: Internal software error

Message value: %1
Drive object: SERVO_S110-CAN, SERVO_S110-DP, SERVO_S110-PN
Reaction: OFF2
Acknowledge: IMMEDIATELY (POWER ON)
Cause: An internal error in the Safety Integrated software on the Motor Module has occurred.
Note:
This fault results in a STOP A that cannot be acknowledged.
Fault value (r0949, interpret hexadecimal):
Only for internal Siemens troubleshooting.
Remedy:
- carry out a POWER ON (power off/on) for all components.
- re-commission the Safety Integrated function and carry out a POWER ON.
- upgrade the Motor Module software.
- contact the Hotline.
- replace the Motor Module.

Note:
MM: Motor Module
SI: Safety Integrated

F30650 SI MM: Acceptance test required

Message value: %1
Drive object: SERVO_S110-CAN, SERVO_S110-DP, SERVO_S110-PN
Reaction: OFF2
Acknowledge: IMMEDIATELY (POWER ON)
Cause: The "Safety Integrated" function on the Motor Module requires an acceptance test.
Note:
This fault results in a STOP A that can be acknowledged.
Fault value (r0949, interpret decimal):
130: Safety parameters for the Motor Module not available.
Note:
This fault value is always output when Safety Integrated is commissioned for the first time.
1000: Reference and actual checksum in the Motor Module are not identical (booting).
- at least one checksum-checked piece of data is defective.

2000: Reference and actual checksum on the Motor Module are not identical (commissioning mode).
- reference checksum incorrectly entered into the Motor Module (p9899 not equal to r9898).
2003: Acceptance test is required as a safety parameter has been changed.
2005: The safety logbook has identified that the safety checksums have changed. An acceptance test is required.
3003: Acceptance test is required as a hardware-related safety parameter has been changed.
9999: Subsequent response of another safety-related fault that occurred when booting that requires an acceptance test.

Remedy:
For fault value = 130:
- carry out safety commissioning routine.

For fault value = 1000:
- again carry out safety commissioning routine.
- replace the memory card or Control Unit.

For fault value = 2000:
- check the safety parameters in the Motor Module and adapt the reference checksum (p9899).

Re fault value = 2003, 2005:
- Carry out an acceptance test and generate an acceptance report.

The procedure when carrying out an acceptance test as well as an example of the acceptance report are provided in the following literature:
SINAMICS S120 Function Manual Safety Integrated

For fault value = 3003:
- carry out the function checks for the modified hardware and generate an acceptance report.

The procedure when carrying out an acceptance test as well as an example of the acceptance report are provided in the following literature:
SINAMICS S120 Function Manual Safety Integrated

For fault value = 9999:
- carry out diagnostics for the other safety-related fault that is present.

Note:
MM: Motor Module
SI: Safety Integrated
See also: p9799 (SI reference checksum SI parameters (Control Unit)), p9899 (SI setpoint checksum SI parameters (processor 2))

F30651 SI MM: Synchronization with Control Unit unsuccessful

Message value: %1
Drive object: SERVO_S110-CAN, SERVO_S110-DP, SERVO_S110-PN
Reaction: OFF2
Acknowledge: IMMEDIATELY (POWER ON)
Cause: The "Safety Integrated" function integrated in the drive is requesting synchronization of the safety time slices on the Control Unit and Motor Module. This synchronization routine was unsuccessful.
Note:
This fault results in a STOP A that cannot be acknowledged.
Fault value (r0949, interpret decimal):
Only for internal Siemens troubleshooting.

Remedy:
- carry out a POWER ON (power off/on) for all components.
- upgrade the Motor Module software.
- upgrade the Control Unit software.

Note:
MM: Motor Module
SI: Safety Integrated

F30652 SI MM: Illegal monitoring clock cycle

Message value: %1
Drive object: SERVO_S110-CAN, SERVO_S110-DP, SERVO_S110-PN
Reaction: OFF2
Acknowledge: IMMEDIATELY (POWER ON)
Cause: The Safety Integrated monitoring clock cycle cannot be maintained due to the communication conditions requested in the system.
Note:
This fault results in a STOP A that cannot be acknowledged.
Fault value (r0949, interpret decimal):
Only for internal Siemens troubleshooting.
Remedy: - if fault 1652 simultaneously occurs, apply the remedy/countermeasure described there.
- upgrade the Motor Module software.
Note:
MM: Motor Module
SI: Safety Integrated

F30655 SI MM: Align monitoring functions

Message value: %1
Drive object: SERVO_S110-CAN, SERVO_S110-DP, SERVO_S110-PN
Reaction: OFF2
Acknowledge: IMMEDIATELY (POWER ON)
Cause: An error has occurred when aligning the Safety Integrated monitoring functions on the Control Unit (CU) and Motor Module (MM). Control Unit and Motor Module were not able to determine a common set of supported SI monitoring functions.
- there is either a DRIVE-CLiQ communication error or communication has failed.
- Safety Integrated software releases on the Control Unit and Motor Module are not compatible with one another.
Note:
This fault results in a STOP A that cannot be acknowledged.
Fault value (r0949, interpret hexadecimal):
Only for internal Siemens troubleshooting.
Remedy: - carry out a POWER ON (power off/on) for all components.
- upgrade the Motor Module software.
- upgrade the Control Unit software.
- check the electrical cabinet design and cable routing for EMC compliance
Note:
CU: Control Unit
MM: Motor Module
SI: Safety Integrated

F30656 SI MM: Motor Module parameter error

Message value: %1
Drive object: SERVO_S110-CAN, SERVO_S110-DP, SERVO_S110-PN
Reaction: OFF2
Acknowledge: IMMEDIATELY (POWER ON)
Cause: When accessing the Safety Integrated parameters for the Motor Module (MM) in the non-volatile memory, an error has occurred.
Note:
This fault results in a STOP A that can be acknowledged.
Fault value (r0949, interpret decimal):
129:
- safety parameters for the Motor Module corrupted.
- drive with enabled safety functions was possibly copied offline using the commissioning software and the project downloaded.
131: Internal software error on the Control Unit.
255: Internal Motor Module software error.

Remedy:
- re-commission the safety functions.
- upgrade the Control Unit software.
- upgrade the Motor Module software.
- replace the memory card or Control Unit.

For fault value = 129:
- activate the safety commissioning mode (p0010 = 95).
- adapt the PROFIsafe address (p9610).
- start the copy function for SI parameters (p9700 = D0 hex).
- acknowledge data change (p9701 = DC hex).
- exit the safety commissioning mode (p0010 = 0).
- save all parameters (p0977 = 1 or "copy RAM to ROM").
- carry out a POWER ON (power off/on) for all components.

Note:
MM: Motor Module
SI: Safety Integrated

F30659 SI MM: Write request for parameter rejected

Message value: %1

Drive object: SERVO_S110-CAN, SERVO_S110-DP, SERVO_S110-PN

Reaction: OFF2

Acknowledge: IMMEDIATELY (POWER ON)

Cause: The write request for one or several Safety Integrated parameters on the Motor Module (MM) was rejected.

Note:
This fault does not result in a safety stop response.

Fault value (r0949, interpret decimal):
10: An attempt was made to enable the STO function although this cannot be supported.
11: An attempt was made to enable the SBC function although this cannot be supported.
13: An attempt was made to enable the SS1 function although this cannot be supported.
14: An attempt was made to enable the safe motion monitoring function with the higher-level control, although this cannot be supported.
15: An attempt was made to enable the motion monitoring functions integrated in the drive although these cannot be supported.
16: An attempt was made to enable the PROFIsafe communication - although this cannot be supported or the version of the PROFIsafe driver used on the CU and MM is different.
18: An attempt was made to enable the PROFIsafe function for Basic Functions although this cannot be supported.
19: For ESR, an attempt was made to enable the delay for pulse suppression, although this cannot be supported.
See also: r9771 (SI common functions (processor 1)), r9871 (SI common functions (processor 2))

Remedy: Re fault value = 10, 11, 13, 14, 15, 16, 18, 19:
- check whether there are faults in the safety function alignment between the Control Unit and the Motor Module involved (F01655, F30655) and if required, carry out diagnostics for the faults involved.
- use a Motor Module that supports the required function.
- upgrade the Motor Module software.
- upgrade the Control Unit software.

Note:
CU: Control Unit
ESR: Extended Stop and Retract
MM: Motor Module
SBC: Safe Brake Control
SI: Safety Integrated
SS1: Safe Stop 1 (corresponds to Stop Category 1 acc. to EN60204)
STO: Safe Torque Off / SH: Safe standstill

F30662 Error in internal communications

Message value: %1
Drive object: All objects
Reaction: OFF2
Acknowledge: POWER ON
Cause: A module-internal communication error has occurred.
Fault value (r0949, interpret hexadecimal):
Only for internal Siemens troubleshooting.
Remedy: - carry out a POWER ON (power off/on).
- upgrade firmware to later version.
- contact the Hotline.

F30664 Error while booting

Message value: %1
Drive object: All objects
Reaction: OFF2
Acknowledge: POWER ON
Cause: An error has occurred during booting.
Fault value (r0949, interpret hexadecimal):
Only for internal Siemens troubleshooting.
Remedy: - carry out a POWER ON (power off/on).
- upgrade firmware to later version.
- contact the Hotline.

F30665 SI MM: System is defective

Message value: %1
Drive object: SERVO_S110-CAN, SERVO_S110-DP, SERVO_S110-PN
Reaction: OFF2
Acknowledge: IMMEDIATELY
Cause: A system defect was detected before the last boot or in the actual one. The system might have been rebooted (reset).
Fault value (r0949, interpret hexadecimal):
200000 hex, 400000 hex:
- Fault in the actual booting/operation.
2 hex:
- parameters p9500 and p9300 are not the same (if Safety message C30711 is displayed at the same time).
Additional values:
- defect before the last time that the system booted.
Remedy: - carry out a POWER ON (power off/on).
- upgrade firmware to later version.
- contact the Hotline.
For fault value = 2:
- check parameters p9500 and p9300 to see if they are the same (if Safety message C30711 is displayed at the same time).
Re fault value = 400000 hex:
- ensure that the Control Unit is connected to the Power Module.

A30666 (F) SI Motion MM: Steady-state (static) 1 signal at the F-DI for safe acknowledgment

Message value: -
Drive object: SERVO_S110-CAN, SERVO_S110-DP, SERVO_S110-PN
Reaction: NONE
Acknowledge: NONE
Cause: A logical 1 signal is present at the F-DI configured in p10106 for more than 10 seconds.
If, at the F-DI no acknowledgment was performed for safe acknowledgment, then a steady-state logical and 0 signal must be present. This avoids unintentional safety-relevant acknowledgement (or the "Internal Event Acknowledge" signal) if a wire breaks or one of the two digital inputs bounces.

Remedy: Set the fail-safe digital input (F-DI) to a logical 0 signal (p10106).
Note:
F-DI: Failsafe Digital Input
Reaction upon F: NONE
Acknowl. upon F: IMMEDIATELY

F30672 SI CU: Control Unit software incompatible

Message value: %1
Drive object: SERVO_S110-CAN, SERVO_S110-DP, SERVO_S110-PN
Reaction: OFF2
Acknowledge: IMMEDIATELY (POWER ON)
Cause: The existing Control Unit software does not support the safe drive-based motion monitoring function.
Note:
This fault results in a STOP A that cannot be acknowledged.
Fault value (r0949, interpret decimal):
Only for internal Siemens troubleshooting.
Remedy: - check whether there are faults in the safety function alignment between the Control Unit and the Motor Module (F01655, F30655) and if required, carry out diagnostics for the faults involved.
- use a Control Unit that supports the safe motion monitoring function.
- upgrade the Control Unit software.
Note:
SI: Safety Integrated

F30680 SI Motion MM: Checksum error safety monitoring functions

Message value: %1
Drive object: SERVO_S110-CAN, SERVO_S110-DP, SERVO_S110-PN
Reaction: OFF2
Acknowledge: IMMEDIATELY (POWER ON)
Cause: The actual checksum calculated by the Motor Module and entered in r9398 over the safety-relevant parameters does not match the reference checksum saved in p9399 at the last machine acceptance.
Safety-relevant parameters have been changed or a fault is present.
Note:
This fault results in a STOP A that can be acknowledged.
Fault value (r0949, interpret decimal):
0: Checksum error for SI parameters for motion monitoring.
1: Checksum error for SI parameters for component assignment.
Remedy: - check the safety-relevant parameters and if required, correct.
- set the reference checksum to the actual checksum.
- perform a POWER ON if safety parameters requiring a POWER ON have been modified.
- carry out an acceptance test.

F30681 SI Motion MM: Incorrect parameter value

Message value: Parameter: %1
Drive object: SERVO_S110-CAN, SERVO_S110-DP, SERVO_S110-PN
Reaction: OFF2
Acknowledge: IMMEDIATELY (POWER ON)
Cause: The parameter cannot be parameterized with this value.
Note:
This message does not result in a safety stop response.
Fault value (r0949, interpret decimal):
Parameter number with the incorrect value.
Remedy: Correct the parameter value.
If the encoder parameters (p9526/p9326) have different values, start the copy function for SI parameters on the drive (p9700 = 57 hex).
Also check p9316.0 for fault value 9317.

F30682 SI Motion MM: Monitoring function not supported

Message value: %1
Drive object: SERVO_S110-CAN, SERVO_S110-DP, SERVO_S110-PN
Reaction: OFF2
Acknowledge: IMMEDIATELY (POWER ON)
Cause: The monitoring function enabled in p9301, p9501, p9601 or p9801 is not supported in this firmware version.
Note:
This message does not result in a safety stop response.
Fault value (r0949, interpret decimal):
1: Monitoring function SLP not supported (p9301.1).
2: Monitoring function SCA not supported (p9301.7 and p9301.8 ... 15).
3: Monitoring function SLS override not supported (p9301.5).
4: Monitoring function external ESR activation not supported (p9301.4).
5: Monitoring function F-DI in PROFIsafe not supported (p9301.30).
6: Enable actual value synchronization not supported (p9301.3).
9: Monitoring function not supported, enable bit reserved (p9301.2, p9301.17 ... 29, p9301.31, if required p9301.6).
12: This Control Unit does not support NcSI.
24: Monitoring function SDI not supported.
26: Hysteresis and filtering for SSM monitoring function without an encoder not supported (p9301.16).
30: The firmware version of the Motor Module is older than the version of the Control Unit.
Remedy: - de-select the monitoring function involved (p9301, p9301, p9303, p9601, p9801).
- Upgrade the Motor Module firmware.
Note:
ESR: Extended Stop and Retract
SCA: Safe Cam / SN: Safe software cam
SDI: Safe Direction (safe motion direction)
SI: Safety Integrated
SLP: Safely-Limited Position / SE: Safe software limit switches
SLS: Safely-Limited Speed / SG: Safely reduced speed
See also: p9301, p9501, p9503, p9601, p9801, r9871

F30683 SI Motion MM: SOS/SLS enable missing

Message value: -
Drive object: SERVO_S110-CAN, SERVO_S110-DP, SERVO_S110-PN
Reaction: OFF2
Acknowledge: IMMEDIATELY (POWER ON)
Cause: The safety-relevant basic function "SOS/SLS" is not enabled in p9301 although other safety-relevant monitoring functions are enabled.
Note:
This message does not result in a safety stop response.
Remedy: Enable the function "SOS/SLS" (p9301.0).
Note:
SI: Safety Integrated
SLS: Safely-Limited Speed / SG: Safely reduced speed
SOS: Safe Operating Stop / SBH: Safe operating stop
See also: p9301 (SI Motion enable safety functions (processor 2))

F30685 SI Motion MM: Safely-Limited Speed limit value too high

Message value: %1
Drive object: SERVO_S110-CAN, SERVO_S110-DP, SERVO_S110-PN
Reaction: OFF2
Acknowledge: IMMEDIATELY (POWER ON)
Cause: The limit value for the function "Safely-Limited Speed" (SLS) is greater than the speed that corresponds to an encoder limit frequency of 500 kHz.

Note:
This message does not result in a safety stop response.
Fault value (r0949, interpret decimal):
Maximum permissible speed.

Remedy: Correct the limit values for SLS and carry out a POWER ON.
Note:
SI: Safety Integrated
SLS: Safely-Limited Speed / SG: Safely reduced speed
See also: p9331 (SI Motion SLS limit values (processor 2))

F30688 SI Motion MM: Actual value synchronization not permissible

Message value: -
Drive object: SERVO_S110-CAN, SERVO_S110-DP, SERVO_S110-PN
Reaction: OFF2
Acknowledge: IMMEDIATELY (POWER ON)
Cause: - It is not permissible to enable actual value synchronization for a 1-encoder system.
- It is not permissible to simultaneously enable actual value synchronization and a monitoring function with absolute reference (SCA/SLP).
Note:
This fault results in a STOP A that cannot be acknowledged.
Remedy: - Either select the "actual value synchronization" function or parameterize a 2-encoder system.
- Either de-select the function "actual value synchronization" or the monitoring functions with absolute reference (SCA/SLP) and carry out a POWER ON.
Note:
SCA: Safe Cam / SN: Safe software cam
SI: Safety Integrated
SLP: Safely-Limited Position / SE: Safe software limit switches
See also: p9501 (SI Motion enable safety functions (processor 1))

F30692 SI Motion MM: Incorrect parameter value encoderless

Message value: Parameter: %1
Drive object: SERVO_S110-CAN, SERVO_S110-DP, SERVO_S110-PN
Reaction: OFF2
Acknowledge: IMMEDIATELY (POWER ON)
Cause: The parameter cannot be parameterized with this value if encoderless motion monitoring functions have been parameterized in p9306.
Note:
This message does not result in a safety stop response.
Fault value (r0949, interpret decimal):
Parameter number with the incorrect value.
See also: p9301 (SI Motion enable safety functions (processor 2))
Remedy: Correct the parameter value or de-select encoderless motion monitoring functions.
See also: p9301 (SI Motion enable safety functions (processor 2)), p9501 (SI Motion enable safety functions (processor 1))

A30693 (F) SI MM: Safety parameter settings changed, warm restart/POWER ON required

Message value: %1
Drive object: SERVO_S110-CAN, SERVO_S110-DP, SERVO_S110-PN
Reaction: NONE
Acknowledge: NONE
Cause: Safety parameters have been changed; these will only take effect following a warm restart or POWER ON.
Alarm value (r2124, interpret decimal):
Parameter number of the safety parameter which has changed, necessitating a warm restart or POWER ON.

Remedy: - carry out a warm restart (p0009 = 30, p0976 = 2, 3).
- carry out a POWER ON (power off/on) for all components.
Note:
Before performing an acceptance test, a POWER ON must be carried out for all components.

Reaction upon F: NONE (OFF1, OFF2, OFF3)

Acknowl. upon F: POWER ON

C30700 SI Motion MM: STOP A initiated

Message value: -

Drive object: SERVO_S110-CAN, SERVO_S110-DP, SERVO_S110-PN

Reaction: OFF2

Acknowledge: IMMEDIATELY (POWER ON)

Cause: The drive is stopped via a STOP A (pulses are suppressed via the safety shutdown path of the Control Unit).
Possible causes:
- stop request from the Control Unit.
- pulses not suppressed after a parameterized time (p9357) after test stop selection.
- subsequent response to the message C30706 "SI Motion MM: SAM/SBR limit exceeded".
- subsequent response to the message C30714 "SI Motion MM: Safely-Limited Speed exceeded".
- subsequent response to the message C30701 "SI Motion MM: STOP B initiated".

Remedy: - remove the cause to the fault on the Control Unit.
- check the value in p9357, if required, increase the value.
- check the shutdown path of the Control Unit (check DRIVE-CLiQ communication).
- carry out a diagnostics routine for message C30706.
- carry out a diagnostics routine for message C30714.
- carry out a diagnostics routine for message C30701.
- replace the Motor Module/Power Module
- replace Control Unit.
This message can only be acknowledged via the Terminal Module 54F (TM54F) or PROFIsafe.
Note:
SAM: Safe Acceleration Monitor (safe acceleration monitoring)
SBR: Safe Brake Ramp (safe brake ramp monitoring)
SI: Safety Integrated

C30701 SI Motion MM: STOP B initiated

Message value: -

Drive object: SERVO_S110-CAN, SERVO_S110-DP, SERVO_S110-PN

Reaction: OFF3

Acknowledge: IMMEDIATELY (POWER ON)

Cause: The drive is stopped via a STOP B (braking along the OFF3 ramp).
As a result of this fault, after the time parameterized in p9356 has expired or after the speed threshold parameterized in p9360 has been fallen below, message C30700 "SI Motion MM: STOP A initiated" is output.
Possible causes:
- stop request from the Control Unit.
- subsequent response to the message C30714 "SI Motion MM: Safely-Limited Speed exceeded".
- subsequent response to the message C30711 "SI Motion MM: Defect in a monitoring channel".
- subsequent response to the message C30707 "SI Motion MM: tolerance for safe operating stop exceeded".

Remedy: - remove the cause to the fault on the Control Unit.
- carry out a diagnostics routine for message C30714.
- carry out a diagnostics routine for message C30711.
- carry out a diagnostics routine for message C30707.
This message can only be acknowledged via the Terminal Module 54F (TM54F) or PROFIsafe.
Note:
SI: Safety Integrated

C30706 SI Motion MM: SAM/SBR limit exceeded

Message value: -

Drive object: SERVO_S110-CAN, SERVO_S110-DP, SERVO_S110-PN

Reaction: NONE

Acknowledge: IMMEDIATELY (POWER ON)

Cause: Motion monitoring functions with encoder (p9306 = 0) or encoderless with set acceleration monitoring (p9306 = 3):

SAM - safe acceleration monitoring. After initiating STOP B (SS1) or STOP C (SS2), the speed has exceeded the selected tolerance.

Motion monitoring functions encoderless with set brake ramp monitoring (p9306 = 1):

SBR - Safe brake ramp monitoring. After initiating STOP B (SS1) or SLS changeover to the lower speed stage, the speed has exceeded the selected tolerance.

- via F-DI or PROFIsafe.

The drive is shut down by the message C30700 "SI Motion MM: STOP A initiated".

Remedy: Check the braking behavior and, if necessary, adapt the tolerance for the "SAM" function or modify the parameter settings for the "SBR" function.

This message can be acknowledged without a POWER ON as follows:

- motion monitoring functions integrated in the drive: via Terminal Module 54F (TM54F) or PROFIsafe

Note:

SAM: Safe Acceleration Monitor (safe acceleration monitoring)

SBR: Safe Brake Ramp (safe ramp monitoring)

SI: Safety Integrated

See also: p9348, p9381, p9382, p9383, p9548

C30707 SI Motion MM: Tolerance for safe operating stop exceeded

Message value: -

Drive object: SERVO_S110-CAN, SERVO_S110-DP, SERVO_S110-PN

Reaction: NONE

Acknowledge: IMMEDIATELY (POWER ON)

Cause: The actual position has distanced itself further from the target position than the standstill tolerance.

The drive is shut down by the message C30701 "SI Motion MM: STOP B initiated".

Remedy: - check whether safety faults are present and if required carry out the appropriate diagnostic routines for the particular faults.

- check whether the standstill tolerance matches the accuracy and control dynamic performance of the axis.

This message can only be acknowledged via the Terminal Module 54F (TM54F) or PROFIsafe.

Note:

SI: Safety Integrated

SOS: Safe Operating Stop / SBH: Safe operating stop

See also: p9530 (SI Motion standstill tolerance (processor 1))

C30708 SI Motion MM: STOP C initiated

Message value: -

Drive object: SERVO_S110-CAN, SERVO_S110-DP, SERVO_S110-PN

Reaction: STOP2

Acknowledge: IMMEDIATELY (POWER ON)

Cause: The drive is stopped via a STOP C (braking along the OFF3 ramp).

"Safe Operating Stop" (SOS) is activated after the parameterized timer has expired.

Possible causes:

- stop request from the higher-level control.

- subsequent response to the message C30714 "SI Motion MM: Safely-Limited Speed exceeded".

See also: p9552 (SI Motion transition time STOP C to SOS (processor 1))

Remedy: - remove the cause of the fault at the control.
- carry out a diagnostics routine for message C30714.
This message can only be acknowledged via the Terminal Module 54F (TM54F) or PROFIsafe.
Note:
SI: Safety Integrated
SOS: Safe Operating Stop / SBH: Safe operating stop

C30709 SI Motion MM: STOP D initiated

Message value: -
Drive object: SERVO_S110-CAN, SERVO_S110-DP, SERVO_S110-PN
Reaction: NONE
Acknowledge: IMMEDIATELY (POWER ON)
Cause: The drive is stopped via a STOP D (braking along the path).
"Safe Operating Stop" (SOS) is activated after the parameterized timer has expired.
Possible causes:
- stop request from the Control Unit.
- subsequent response to the message C30714 "SI Motion: Safely limited speed exceeded".
See also: p9353 (SI Motion transition time STOP D to SOS (processor 2)), p9553 (SI Motion transition time STOP D to SOS (processor 1))
Remedy: - remove the cause of the fault at the control.
- carry out a diagnostics routine for message C30714.
This message can only be acknowledged via the Terminal Module 54F (TM54F) or PROFIsafe.
Note:
SI: Safety Integrated
SOS: Safe Operating Stop / SBH: Safe operating stop

C30710 SI Motion MM: STOP E initiated

Message value: -
Drive object: SERVO_S110-CAN, SERVO_S110-DP, SERVO_S110-PN
Reaction: NONE
Acknowledge: IMMEDIATELY (POWER ON)
Cause: The drive is stopped via a STOP E (retraction motion).
"Safe Operating Stop" (SOS) is activated after the parameterized timer has expired.
Possible causes:
- stop request from the higher-level control.
- subsequent response to the message C30714 "SI Motion: Safely limited speed exceeded".
Remedy: - remove the cause of the fault at the control.
- carry out a diagnostics routine for message C30714.
This message can only be acknowledged via the Terminal Module 54F (TM54F) or PROFIsafe.
Note:
SI: Safety Integrated
SOS: Safe Operating Stop / SBH: Safe operating stop

C30711 SI Motion MM: Defect in a monitoring channel

Message value: %1
Drive object: SERVO_S110-CAN, SERVO_S110-DP, SERVO_S110-PN
Reaction: NONE
Acknowledge: IMMEDIATELY (POWER ON)
Cause: When cross-comparing the two monitoring channels, the drive detected a difference between the input data or results of the monitoring functions and initiated a STOP F. One of the monitoring functions no longer reliably functions - i.e. safe operation is no longer possible.
If at least one monitoring function is active, then after the parameterized timer has expired, the message C30701 "SI Motion: STOP B initiated" is output. The message is output with message value 1031 when the Sensor Module hardware is replaced.

The following message values may also occur in the following cases if the cause that is explicitly mentioned does not apply:
- differently parameterized cycle times (p9500/p9300, p9511/p9311).
- differently parameterized axis types (p9502/p9302).
- excessively fast cycle times (p9500/p9300, p9511/p9311).
- incorrect synchronization.

Message value (r9749, interpret decimal):
0 ... 999: Number of the cross-compared data that resulted in this message. Refer to safety message C01711for a description of the individual data.
The significance of the individual message values is described in safety message C01711 of the Control Unit.
1000: Watchdog timer has expired. Too many signal changes have occurred at safety-relevant inputs.
1001: Initialization error of watchdog timer.
1005: Pulses already suppressed for test stop selection.
1011: Acceptance test status between the monitoring channels differ.
1012: Plausibility violation of the actual value from the encoder.
1020: Cyc. communication failure between the monit. cycles.
1021: Cyc. communication failure between the monit. channel and Sensor Module.
1023: Error in the effectiveness test in the DRIVE-CLiQ encoder
1030: Encoder fault detected from another monitoring channel.
1031: Data transfer error between the monitoring channel and the Sensor Module (p9526/p9326).
1040: Pulses suppressed with active encoderless monitoring functions.
1041: Current absolute value too low (encoderless)
1042: Current/voltage plausibility error
1043: Too many acceleration phases
1044: Actual current values plausibility error.
5000 ... 5140:
PROFIsafe message values.
For these fault values, the failsafe control signals (failsafe values) are transferred to the safety functions.
The significance of the individual message values is described in safety message C01711 of the Control Unit.
6000 ... 6166:
PROFIsafe message values (PROFIsafe driver for PROFIBUS DP V1/V2 and PROFINET).
For these fault values, the failsafe control signals (failsafe values) are transferred to the safety functions.
The significance of the individual message values is described in safety message C01711 of the Control Unit.
See also: p9555 (SI Motion transition time STOP F to STOP B (processor 1)), r9725 (SI Motion diagnostics STOP F)

Remedy:

Re message value = 1030:
- check the encoder connection.
- if required, replace the encoder.

Re message value = 1031:
When replacing a Sensor Module, carry out the following steps:
- start the copy function for the node identifier on the drive (p9700 = 1D hex).
- acknowledge the hardware CRC on the drive (p9701 = EC hex).
- save all parameters (p0977 = 1).
- carry out a POWER ON (power off/on) for all components.

The following always applies:
- check the encoder connection.
- if required, replace the encoder.

Re message value = 1040:
- de-select encoderless monitoring functions, select and de-select STO.
- if monitoring function is active, issue "SLS" pulse enable within 5 s of de-selecting STO.

Re other message values:
- The significance of the individual message values is described in safety message C01711 of the Control Unit.

Note:
This message can only be acknowledged via the Terminal Module 54F (TM54F) or PROFIsafe.
See also: p9300 (SI Motion monitoring clock cycle (processor 2)), p9500 (SI Motion monitoring clock cycle (processor 1))

C30712 SI Motion MM: Defect in F-IO processing

Message value: %1

Drive object: SERVO_S110-CAN, SERVO_S110-DP, SERVO_S110-PN

Reaction: NONE

Acknowledge: IMMEDIATELY (POWER ON)

Cause: When cross checking and comparing the two monitoring channels, the drive detected a difference between parameters or results of the F-IO processing and initiated a STOP F. One of the monitoring functions no longer reliably functions - i.e. safe operation is no longer possible.

The safety message C30711 with message value 0 is also displayed due to initiation of STOP F.

If at least one monitoring function is active, the safety message C30701 "SI Motion: STOP B initiated" is output after the parameterized timer has expired.

Message value (r9749, interpret decimal):

Number of the cross-compared data that resulted in this message.

Refer to the description of the message values in safety message C01712.

Remedy: - check parameterization in the parameters involved and correct if required.

- ensure equality by copying the SI data to the second channel and then carry out an acceptance test.

- check monitoring clock cycle for equality (p9500, p9300).

Note:

This message can be acknowledged via F-DI or PROFIsafe.

See also: p9300 (SI Motion monitoring clock cycle (processor 2)), p9500 (SI Motion monitoring clock cycle (processor 1))

C30714 SI Motion MM: Safely-Limited Speed exceeded

Message value: %1

Drive object: SERVO_S110-CAN, SERVO_S110-DP, SERVO_S110-PN

Reaction: NONE

Acknowledge: IMMEDIATELY (POWER ON)

Cause: The drive had moved faster than that specified by the velocity limit value (p9331). The drive is stopped as a result of the configured stop response (p9363).

Message value (r9749, interpret decimal):

100: SLS1 exceeded.

200: SLS2 exceeded.

300: SLS3 exceeded.

400: SLS4 exceeded.

1000: Encoder limit frequency exceeded.

Remedy: - check the traversing/motion program in the control.

- check the limits for "SLS" function and if required, adapt (p9331).

Note:

This message can only be acknowledged via the Terminal Module 54F (TM54F) or PROFIsafe.

SI: Safety Integrated

SLS: Safely-Limited Speed / SG: Safely reduced speed

See also: p9331 (SI Motion SLS limit values (processor 2)), p9363 (SI Motion SLS stop response (processor 2))

C30716 SI Motion MM: Tolerance for safe motion direction exceeded

Message value: %1

Drive object: SERVO_S110-CAN, SERVO_S110-DP, SERVO_S110-PN

Reaction: NONE

Acknowledge: IMMEDIATELY (POWER ON)

Cause: The tolerance for the "safe motion direction" function was exceeded. The drive is stopped as a result of the configured stop response (p9366).

Message value (r9749, interpret decimal):

0: Tolerance for the "safe motion direction positive" function exceeded.

1: Tolerance for the "safe motion direction negative" function exceeded.

Remedy: - check the traversing/motion program in the control.
- check the tolerance for "SDI" function and if required, adapt (p9364).
This message can be acknowledged as follows:
Via F-DI or PROFIsafe
Note:
SDI: Safe Direction (safe motion direction)
SI: Safety Integrated
See also: p9364 (SI Motion SDI tolerance (processor 2)), p9365 (SI Motion SDI delay time (processor 2)), p9366 (SI Motion SDI stop response (processor 2))

C30770 SI Motion MM: Discrepancy error affecting the fail-safe inputs/outputs

Message value: %1
Drive object: SERVO_S110-CAN, SERVO_S110-DP, SERVO_S110-PN
Reaction: NONE
Acknowledge: IMMEDIATELY (POWER ON)
Cause: The fail-safe digital inputs/digital outputs (F-DI/F-DO) show a different state longer than that parameterized in p10002 / p10102.
Fault value (r0949, interpret hexadecimal):
yyyyxxxx hex
xxxx: Discrepancy error for fail-safe digital inputs (F-DI).
Bit 0: Discrepancy error for F-DI 0
Bit 1: Discrepancy error for F-DI 1
...
yyyy: Discrepancy error for fail-safe digital outputs (F-DO).
Bit 0: Discrepancy error for F-DO 0
...
Note:
If several discrepancy errors occur consecutively, then this fault is only signaled for the first error that occurs.
Remedy: - check the wiring of the F-DI (contact problems).
Note:
This message can be acknowledged via F-DI or PROFIsafe.
Discrepancy errors of an F-DI can only be completely acknowledged if safe acknowledgement was carried out once the cause of the error was resolved (p10006 or acknowledgment via PROFIsafe). As long as safety acknowledgement was not carried out, the corresponding F-DI stays in the safe state internally.
For cyclic switching operations at the F-DI, it may be necessary to adapt the discrepancy time to the switching frequency.

If the period of a cyclic switching pulse has the order of magnitude of double the value of p10002, then the following formulas must be checked.
p10002 < (tp / 2) - td (discrepancy time must be less than half the period minus the actual discrepancy time)
p10002 >= p9500 (discrepancy time must be no less than P9500)
p10002 > td (discrepancy time must be greater than the switch discrepancy time which may actually apply)
td = possible actual discrepancy time (in ms) that can occur with a switching operation. This must correspond to at least 1 SI sampling cycle (see p9500).
tp = period for a switching operation in ms.
When debounce p10017 is active, the discrepancy time is directly specified by the debounce time.

If the period of a cyclic switching pulse has the order of magnitude of twice the debounce time, then the following formulas should be checked.
p10002 < p10017 + 1 ms - td
p10002 > td
p10002 >= p9500

Example:

For a 12 ms SI sampling cycle and a switching frequency of 110 ms (p10017 = 0), the maximum discrepancy time which can be set is as follows:

p10002 <= (110/2 ms) - 12 ms = 43 ms

Rounded-off, p10002 <= 36 ms is obtained (since the discrepancy time can only be accepted as a whole SI sampling cycle, the value will need to be rounded up or down to a whole SI sampling time value if the result is not an exact multiple of an SI sampling cycle).

Note:

F-DI: Failsafe Digital Input

F-DO: Failsafe Digital Output

A30772 SI Motion MM: Test stop fail-safe digital output active

Message value: -

Drive object: SERVO_S110-CAN, SERVO_S110-DP, SERVO_S110-PN

Reaction: NONE

Acknowledge: NONE

Cause: The test stop for the fail-safe digital output (F-DO) is currently in progress.

Note:

F-DO: Failsafe Digital Output

Remedy: The alarm is automatically withdraw after successfully ending or canceling (when a fault condition occurs) the test stop.

F30773 SI Motion MM: Test stop fault Motor Module

Message value: %1

Drive object: SERVO_S110-CAN, SERVO_S110-DP, SERVO_S110-PN

Reaction: NONE

Acknowledge: IMMEDIATELY (POWER ON)

Cause: A fault has occurred on the MM side during the test stop for the fail-safe outputs.

Fault value (r0949, interpret hexadecimal):

RRRVWXYZ hex:

R: Reserved.

V: Actual state of the DO channel concerned (see X) on the CU (corresponds to the states read back from the hardware, bit 0 = DO 0, bit 1 = DO 1, etc.).

W: Required state of the DO channel concerned (see X, bit 0 = DO 0, bit 1 = DO 1, etc.).

X: DO channels involved, which indicate an error (bit 0 = DO 0, bit 1 = DO 1, etc.).

Y: Reason for the test stop fault.

Z: State of the test stop in which the fault has occurred.

Y: Reason for the test stop fault

Y = 1: MM side in incorrect test stop state (internal fault).

Y = 2: Expected states of the DOs were not fulfilled (CU305: readback via DI 22 / CU240 readback DI 2).

Y = 3: Incorrect timer state on CU side (internal fault)

Y = 4: Expected states of the diag DOs were not fulfilled (CU305: internal readback on MM channel).

Y = 5: Expected states of the second diag DOs were not fulfilled (CU305: internal readback on CU channel).

X and V indicate the DI or Diag-DO state dependent upon the reason for the fault (2, 4 or 5).

In the event of multiple test stop faults, the first one that occurred is shown.

Z: Test stop state and associated test actions

Z = 0 ... 3: Synchronization phase of test stop between CU and Motor Module no switching operations

Z = 4: DO + OFF and DO - OFF

Z = 5: Check to see if states are as expected

Z = 6: DO + ON and DO - ON

Z = 7: Check to see if states are as expected

Z = 8: DO + OFF and DO - ON

Z = 9: Check to see if states are as expected

Z = 10: DO + ON and DO - OFF

Z = 11: Check to see if states are as expected
Z = 12: DO + OFF and DO - OFF
Z = 13: Check to see if states are as expected
Z = 14: End of test stop

Diag expected states in table format:
Test stop state: Expectation Mode 1 / Mode 2 / Mode 3 / Mode 4
5: 0/-/-/1
7: 0/-/-/0
9: 0/-/-/0
11: 1/-/-/1
13: 0/-/-/1
Second diag expected states in table format:
Test stop state: Expectation Mode 1 / Mode 2 / Mode 3 / Mode 4
5: -/-/-/1
7: -/-/-/0
9: -/-/-/1
11: -/-/-/0
13: -/-/-/1
DI expected states in table format:
Test stop state: Expectation Mode 1 / Mode 2 / Mode 3 / Mode 4
5: -/1/1/-
7: -/0/0/-
9: -/0/1/-
11: -/0/1/-
13: -/1/1/-

Example:
Fault F01773 (CU) is signaled with fault value = 0001_0127 and fault F30773 (MM) is signaled with fault value 0000_0127.
This means that in state 7 (Z = 7) the state of the external readback signal was not set correctly (Y = 2) after DO-0 (X = 1) was switched to ON/ON.
Fault value 0001_0127 indicates that 0 was expected (W = 0) and 1 (V = 1) was read back from the hardware.
Fault value 0000_0127 on the MM indicates that the states were as expected.
In the case of fault F30773, W and V are always identical; a value of 0 always means that 0 was expected at the readback input but was not present on the other channel (CU).

Remedy: Check the wiring of the F-DOs and restart the test stop.
Note:
The fault is withdrawn if the test stop is successfully completed.
In the event of multiple test stop faults, the first one that occurred is shown.
Once the test stop has been restarted the next queued test stop fault will be signaled (if there is one).

C30798 SI Motion MM: Test stop running

Message value: -
Drive object: SERVO_S110-CAN, SERVO_S110-DP, SERVO_S110-PN
Reaction: NONE
Acknowledge: IMMEDIATELY (POWER ON)
Cause: The test stop is active.
Remedy: Not necessary.
The message is withdrawn when the test stop is finished.
Note:
SI: Safety Integrated

C30799 SI Motion MM: Acceptance test mode active

Message value: -
Drive object: SERVO_S110-CAN, SERVO_S110-DP, SERVO_S110-PN
Reaction: NONE
Acknowledge: IMMEDIATELY (POWER ON)
Cause: The acceptance test mode is active. The POWER ON signals of the safety-relevant motion monitoring functions can be acknowledged during the acceptance test using the acknowledgement functions of the higher-level control.
Remedy: Not necessary.
The message is withdrawn when exiting the acceptance test mode.
Note:
SI: Safety Integrated

N30800 (F) Power unit: Group signal

Message value: -
Drive object: SERVO_S110-CAN, SERVO_S110-DP, SERVO_S110-PN
Reaction: OFF2
Acknowledge: NONE
Cause: The power unit has detected at least one fault.
Remedy: Evaluate the other messages that are presently available.
Reaction upon F: OFF2
Acknowl. upon F: IMMEDIATELY

F30801 Power unit DRIVE-CLiQ: Sign-of-life missing

Message value: Component number: %1, fault cause: %2
Drive object: SERVO_S110-CAN, SERVO_S110-DP, SERVO_S110-PN
Reaction: OFF2
Acknowledge: IMMEDIATELY
Cause: A DRIVE-CLiQ communication error has occurred from the Control Unit to the power unit concerned.
The computing time load might be too high.
Fault value (r0949, interpret hexadecimal):
yyxx hex: yy = component number, xx = fault cause
xx = 0A hex:
The sign-of-life bit in the receive telegram is not set.
Remedy: - check the electrical cabinet design and cable routing for EMC compliance
- remove DRIVE-CLiQ components that are not required.
- de-select functions that are not required.
- if required, increase the sampling times (p0112, p0115).
- replace the component involved.

F30802 Power unit: Time slice overflow

Message value: -
Drive object: SERVO_S110-CAN, SERVO_S110-DP, SERVO_S110-PN
Reaction: OFF2
Acknowledge: IMMEDIATELY
Cause: A time slice overflow has occurred.
Remedy: - carry out a POWER ON (power off/on) for all components.
- upgrade firmware to later version.
- contact the Hotline.

A30804 (F) Power unit: CRC

Message value: %1
Drive object: SERVO_S110-CAN, SERVO_S110-DP, SERVO_S110-PN
Reaction: NONE
Acknowledge: NONE
Cause: CRC error actuator

Remedy: - carry out a POWER ON (power off/on) for all components.
- upgrade firmware to later version.
- contact the Hotline.

Reaction upon F: OFF2 (OFF1, OFF3)
Acknowl. upon F: IMMEDIATELY

F30805 Power unit: EPROM checksum error

Message value: %1
Drive object: SERVO_S110-CAN, SERVO_S110-DP, SERVO_S110-PN
Reaction: OFF2
Acknowledge: IMMEDIATELY
Cause: Internal parameter data is corrupted.
Fault value (r0949, interpret hexadecimal):
01: EEPROM access error.
02: Too many blocks in the EEPROM.
Remedy: Replace the module.

F30809 Power unit: Switching information not valid

Message value: -
Drive object: SERVO_S110-CAN, SERVO_S110-DP, SERVO_S110-PN
Reaction: OFF2
Acknowledge: IMMEDIATELY
Cause: For 3P gating unit:
The last switching status word in the setpoint telegram is identified by the end ID. Such an end ID was not found.
Remedy: - carry out a POWER ON (power off/on) for all components.
- upgrade firmware to later version.
- contact the Hotline.

A30810 (F) Power unit: Watchdog timer

Message value: -
Drive object: SERVO_S110-CAN, SERVO_S110-DP, SERVO_S110-PN
Reaction: NONE
Acknowledge: NONE
Cause: When booting it was detected that the cause of the previous reset was an SAC watchdog timer overflow.
Remedy: - carry out a POWER ON (power off/on) for all components.
- upgrade firmware to later version.
- contact the Hotline.

Reaction upon F: NONE (OFF2)
Acknowl. upon F: IMMEDIATELY

F30850 Power unit: Internal software error

Message value: %1
Drive object: SERVO_S110-CAN, SERVO_S110-DP, SERVO_S110-PN
Reaction: OFF1 (NONE, OFF2, OFF3)
Acknowledge: POWER ON
Cause: An internal software error has occurred in the power unit.
Fault value (r0949, interpret decimal):
Only for internal Siemens troubleshooting.
Remedy: - replace power unit.
- if required, upgrade the firmware in the power unit.
- contact the Hotline.

F30899 (N, A) Power unit: Unknown fault

Message value: New message: %1
Drive object: SERVO_S110-CAN, SERVO_S110-DP, SERVO_S110-PN
Reaction: NONE (IASC/DCBRAKE, OFF1, OFF2, OFF3, STOP1, STOP2)
Acknowledge: IMMEDIATELY (POWER ON)
Cause: A fault occurred on the power unit that cannot be interpreted by the Control Unit firmware.
This can occur if the firmware on this component is more recent than the firmware on the Control Unit.
Fault value (r0949, interpret decimal):
Fault number.
Note:
If required, the significance of this new fault can be read about in a more recent description of the Control Unit.
Remedy: - replace the firmware on the power unit by an older firmware version (r0128).
- upgrade the firmware on the Control Unit (r0018).
Reaction upon N: NONE
Acknowl. upon N: NONE
Reaction upon A: NONE
Acknowl. upon A: NONE

F30903 Power unit: I2C bus error occurred

Message value: %1
Drive object: SERVO_S110-CAN, SERVO_S110-DP, SERVO_S110-PN
Reaction: NONE (IASC/DCBRAKE, OFF1, OFF2, OFF3, STOP1, STOP2)
Acknowledge: IMMEDIATELY
Cause: Communications error with an EEPROM or A/D converter.
Fault value (r0949, interpret hexadecimal):
80000000 hex:
- internal software error.
00000001 hex ... 0000FFFF hex:
- module fault.
Remedy: Re fault value = 80000000 hex:
- upgrade firmware to later version.
Re fault value = 00000001 hex ... 0000FFFF hex:
- replace the module.

F30907 Power unit: FPGA configuration unsuccessful

Message value: -
Drive object: SERVO_S110-CAN, SERVO_S110-DP, SERVO_S110-PN
Reaction: OFF2 (IASC/DCBRAKE, NONE, OFF1, OFF3, STOP1, STOP2)
Acknowledge: IMMEDIATELY
Cause: During initialization within the power unit, an internal software error has occurred.
Remedy: - if required, upgrade the firmware in the power unit.
- replace power unit.
- contact the Hotline.

A30920 (F) Power unit: Temperature sensor fault

Message value: %1
Drive object: SERVO_S110-CAN, SERVO_S110-DP, SERVO_S110-PN
Reaction: NONE
Acknowledge: NONE
Cause: When evaluating the temperature sensor, an error occurred.
Alarm value (r2124, interpret decimal):
1: Wire breakage or sensor not connected (KTY: R > 1630 Ohm, PT100: R > 375 Ohm).
2: Measured resistance too low (PTC: R < 20 Ohm, KTY: R < 50 Ohm, PT100: R < 30 Ohm).
Remedy: - make sure that the sensor is connected correctly.
- replace the sensor.

Reaction upon F: NONE (IASC/DCBRAKE, OFF1, OFF2, OFF3, STOP1, STOP2)
Acknowl. upon F: IMMEDIATELY

A30999 (F, N) Power unit: Unknown alarm

Message value: New message: %1
Drive object: SERVO_S110-CAN, SERVO_S110-DP, SERVO_S110-PN
Reaction: NONE
Acknowledge: NONE
Cause: An alarm occurred on the power unit that cannot be interpreted by the Control Unit firmware.
This can occur if the firmware on this component is more recent than the firmware on the Control Unit.
Alarm value (r2124, interpret decimal):
Alarm number.
Note:
If required, the significance of this new alarm can be read about in a more recent description of the Control Unit.
Remedy: - replace the firmware on the power unit by an older firmware version (r0128).
- upgrade the firmware on the Control Unit (r0018).
Reaction upon F: NONE (IASC/DCBRAKE, OFF1, OFF2, OFF3, STOP1, STOP2)
Acknowl. upon F: IMMEDIATELY (POWER ON)
Reaction upon N: NONE
Acknowl. upon N: NONE

F31100 (N, A) Encoder 1: Zero mark distance error

Message value: %1
Drive object: SERVO_S110-CAN, SERVO_S110-DP, SERVO_S110-PN
Reaction: ENCODER (IASC/DCBRAKE, OFF1, OFF2, OFF3, STOP1, STOP2)
Acknowledge: PULSE INHIBIT
Cause: The measured zero mark distance does not correspond to the parameterized zero mark distance.
For distance-coded encoders, the zero mark distance is determined from zero marks detected pairs. This means that if a zero mark is missing, depending on the pair generation, this cannot result in a fault and also has no effect in the system.
The zero mark distance for the zero mark monitoring is set in p0425 (rotary encoder) or p0424 (linear encoder).
Fault value (r0949, interpret decimal):
Last measured zero mark distance in increments (4 increments = 1 encoder pulse).
The sign designates the direction of motion when detecting the zero mark distance.
See also: p0491 (Motor encoder fault response ENCODER)
Remedy: - check that the encoder cables are routed in compliance with EMC.
- check the plug connections.
- check the encoder type (encoder with equidistant zero marks).
- adapt the parameter for the distance between zero marks (p0424, p0425).
- if message output above speed threshold, reduce filter time if necessary (p0438).
- replace the encoder or encoder cable.
Reaction upon N: NONE
Acknowl. upon N: NONE
Reaction upon A: NONE
Acknowl. upon A: NONE

F31101 (N, A) Encoder 1: Zero mark failed

Message value: %1
Drive object: SERVO_S110-CAN, SERVO_S110-DP, SERVO_S110-PN
Reaction: ENCODER (IASC/DCBRAKE, NONE, OFF1, OFF2, OFF3, STOP1, STOP2)
Acknowledge: PULSE INHIBIT
Cause: The 1.5 x parameterized zero mark distance was exceeded.
The zero mark distance for the zero mark monitoring is set in p0425 (rotary encoder) or p0424 (linear encoder).

Fault value (r0949, interpret decimal):
Number of increments after POWER ON or since the last zero mark that was detected (4 increments = 1 encoder pulse).
See also: p0491 (Motor encoder fault response ENCODER)

Remedy:
- check that the encoder cables are routed in compliance with EMC.
- check the plug connections.
- check the encoder type (encoder with equidistant zero marks).
- adapt the parameter for the clearance between zero marks (p0425).
- if message output above speed threshold, reduce filter time if necessary (p0438).
- when p0437.1 is active, check p4686.
- replace the encoder or encoder cable.

Reaction upon N: NONE
Acknowl. upon N: NONE
Reaction upon A: NONE
Acknowl. upon A: NONE

F31103 (N, A) Encoder 1: Amplitude error track R

Message value: R track: %1
Drive object: SERVO_S110-CAN, SERVO_S110-DP, SERVO_S110-PN
Reaction: ENCODER (IASC/DCBRAKE, NONE)
Acknowledge: PULSE INHIBIT
Cause: The amplitude of the reference track signal (track R) does not lie within the tolerance bandwidth for encoder 1.
The fault can be initiated when the unipolar voltage level is exceeded (RP/RN) or if the differential amplitude is undershot.
Fault value (r0949, interpret hexadecimal):
yyyyxxxx hex: yyyy = 0, xxxx = Signal level, track R (16 bits with sign)
The response thresholds of the unipolar signal levels of the encoder are between < 1400 mV and > 3500 mV.
The response threshold for the differential signal level of the encoder is < -1600 mV.
A signal level of 500 mV peak value corresponds to the numerical value 5333 hex = 21299 dec.
Note:
The analog value of the amplitude error is not measured at the same time with the hardware fault output by the Sensor Module.
The fault value can only be represented between -32767 ... 32767 dec (-770 ... 770 mV).
The signal level is not evaluated unless the following conditions are satisfied:
- Sensor Module properties available (r0459.31 = 1).
- Monitoring active (p0437.31 = 1).
See also: p0491 (Motor encoder fault response ENCODER)

Remedy:
- check the speed range; frequency characteristic (amplitude characteristic) of the measuring equipment might not be sufficient for the speed range
- check that the encoder cables and shielding are routed in compliance with EMC.
- check the plug connections and contacts of the encoder cable.
- check whether the zero mark is connected and the signal cables RP and RN have been connected correctly.
- replace the encoder cable.
- if the coding disk is soiled or the lighting aged, replace the encoder.

Reaction upon N: NONE
Acknowl. upon N: NONE
Reaction upon A: NONE
Acknowl. upon A: NONE

F31110 (N, A) Encoder 1: Serial communications error

Message value: Fault cause: %1 bin
Drive object: SERVO_S110-CAN, SERVO_S110-DP, SERVO_S110-PN
Reaction: ENCODER (IASC/DCBRAKE, NONE)
Acknowledge: PULSE INHIBIT
Cause: Serial communication protocol transfer error between the encoder and evaluation module.

Fault value (r0949, interpret binary):
Bit 0: Alarm bit in the position protocol.
Bit 1: Incorrect quiescent level on the data line.
Bit 2: Encoder does not respond (does not supply a start bit within 50 ms).
Bit 3: CRC error: The checksum in the protocol from the encoder does not match the data.
Bit 4: Encoder acknowledgement error: The encoder incorrectly understood the task (request) or cannot execute it.
Bit 5: Internal error in the serial driver: An illegal mode command was requested.
Bit 6: Timeout when cyclically reading.
Bit 8: Protocol is too long (e.g. > 64 bits).
Bit 9: Receive buffer overflow.
Bit 10: Frame error when reading twice.
Bit 11: Parity error.
Bit 12: Data line signal level error during the monoflop time.
Bit 13: Data line incorrect.

Remedy: Re fault value, bit 0 = 1:
- Enc defect F31111 may provide additional details.

Re fault value, bit 1 = 1:
- Incorrect encoder type / replace the encoder or encoder cable.

Re fault value, bit 2 = 1:
- Incorrect encoder type / replace the encoder or encoder cable.

Re fault value, bit 3 = 1:
- EMC / connect the cable shield, replace the encoder or encoder cable.

Re fault value, bit 4 = 1:
- EMC / connect the cable shield, replace the encoder or encoder cable, replace the Sensor Module.

Re fault value, bit 5 = 1:
- EMC / connect the cable shield, replace the encoder or encoder cable, replace the Sensor Module.

Re fault value, bit 6 = 1:
- Update Sensor Module firmware.

Re fault value, bit 8 = 1:
- Check parameterization (p0429.2).

Re fault value, bit 9 = 1:
- EMC / connect the cable shield, replace the encoder or encoder cable, replace the Sensor Module.

Re fault value, bit 10 = 1:
- Check parameterization (p0429.2, p0449).

Re fault value, bit 11 = 1:
- Check parameterization (p0436).

Re fault value, bit 12 = 1:
- Check parameterization (p0429.6).

Re fault value, bit 13 = 1:
- Check data line.

Reaction upon N: NONE
Acknowl. upon N: NONE
Reaction upon A: NONE
Acknowl. upon A: NONE

F31111 (N, A) Encoder 1: Absolute encoder EnDat, internal fault/error

Message value: Fault cause: %1 bin
Drive object: SERVO_S110-CAN, SERVO_S110-DP, SERVO_S110-PN
Reaction: ENCODER (IASC/DCBRAKE, NONE)
Acknowledge: PULSE INHIBIT
Cause: The EnDat encoder fault word supplies fault bits that have been set.
Fault value (r0949, interpret binary):
Bit 0: Lighting system failed.
Bit 1: Signal amplitude too low.
Bit 2: Position value incorrect.

Bit 3: Encoder power supply overvoltage condition.
Bit 4: Encoder power supply undervoltage condition.
Bit 5: Encoder power supply overcurrent condition.
Bit 6: The battery must be changed.
See also: p0491 (Motor encoder fault response ENCODER)

Remedy: Re fault value, bit 0 = 1:
Encoder is defective. Replace the encoder, where the motor encoder has a direct DRIVE-CLiQ socket: Replace the motor.
Re fault value, bit 1 = 1:
Encoder is defective. Replace the encoder, where the motor encoder has a direct DRIVE-CLiQ socket: Replace the motor.
Re fault value, bit 2 = 1:
Encoder is defective. Replace the encoder, where the motor encoder has a direct DRIVE-CLiQ socket: Replace the motor.
Re fault value, bit 3 = 1:
5 V power supply voltage fault.
When using an SMC: Check the plug-in cable between the encoder and SMC or replace the SMC.
When a motor encoder with a direct DRIVE-CLiQ connection is used: Replace the motor.
Re fault value, bit 4 = 1:
5 V power supply voltage fault.
When using an SMC: Check the plug-in cable between the encoder and SMC or replace the SMC.
When using a motor with DRIVE-CLiQ: Replace the motor.
Re fault value, bit 5 = 1:
Encoder is defective. Replace the encoder, where the motor encoder has a direct DRIVE-CLiQ socket: Replace the motor.
Re fault value, bit 6 = 1:
The battery must be changed (only for encoders with battery back-up).

Reaction upon N: NONE
Acknowl. upon N: NONE
Reaction upon A: NONE
Acknowl. upon A: NONE

F31112 (N, A) Encoder 1: Error bit set in the serial protocol

Message value: %1
Drive object: SERVO_S110-CAN, SERVO_S110-DP, SERVO_S110-PN
Reaction: ENCODER (IASC/DCBRAKE, NONE)
Acknowledge: PULSE INHIBIT
Cause: The encoder sends a set error bit via the serial protocol.
Fault value (r0949, interpret binary):
Bit 0: Fault bit in the position protocol.
Remedy: For fault value, bit 0 = 1:
In the case of an EnDat encoder, F31111 may provide further details.

Reaction upon N: NONE
Acknowl. upon N: NONE
Reaction upon A: NONE
Acknowl. upon A: NONE

F31115 (N, A) Encoder 1: Amplitude error track A or B (A^2 + B^2)

Message value: A track: %1, B-track: %2
Drive object: SERVO_S110-CAN, SERVO_S110-DP, SERVO_S110-PN
Reaction: ENCODER (IASC/DCBRAKE, NONE)
Acknowledge: PULSE INHIBIT
Cause: The amplitude (root of A^2 + B^2) for encoder 1 exceeds the permissible tolerance.

Fault value (r0949, interpret hexadecimal):
yyyyxxxx hex:
yyyy = Signal level, track B (16 bits with sign).
xxxx = Signal level, track A (16 bits with sign).
The nominal signal level of the encoder must lie in the range 375 mV to 600 mV (500 mV -25/+20 %).
The response thresholds are < 230 mV (observe the frequency response of the encoder) and > 750 mV.
A signal level of 500 mV peak value corresponds to the numerical value 5333 hex = 21299 dec.
Note for Sensor Modules for resolvers (e.g. SMC10):
The nominal signal level is at 2900 mV (2.0 Vrms). The response thresholds are < 1070 mV and > 3582 mV.
A signal level of 2900 mV peak value corresponds to the numerical value 6666 hex = 26214 dec.
Note:
The analog values of the amplitude error are not measured at the same time with the hardware fault output by the Sensor Module.
See also: p0491 (Motor encoder fault response ENCODER)

Remedy:
- check that the encoder cables and shielding are routed in compliance with EMC.
- check the plug connections.
- replace the encoder or encoder cable.
- check the Sensor Module (e.g. contacts).
The following applies to measuring systems without their own bearing system:
- adjust the scanning head and check the bearing system of the measuring wheel.
The following applies for measuring systems with their own bearing system:
- ensure that the encoder housing is not subject to any axial force.

Reaction upon N: NONE
Acknowl. upon N: NONE
Reaction upon A: NONE
Acknowl. upon A: NONE

F31116 (N, A) Encoder 1: Amplitude error monitoring track A + B

Message value: A track: %1, B-track: %2
Drive object: SERVO_S110-CAN, SERVO_S110-DP, SERVO_S110-PN
Reaction: ENCODER (IASC/DCBRAKE, NONE)
Acknowledge: IMMEDIATELY
Cause: The amplitude of the rectified encoder signals A and B and the amplitude from the roots of A^2 + B^2 for encoder 1 are not within the tolerance bandwidth.
Fault value (r0949, interpret hexadecimal):
yyyyxxxx hex:
yyyy = Signal level, track B (16 bits with sign).
xxxx = Signal level, track A (16 bits with sign).
The nominal signal level of the encoder must lie in the range 375 mV to 600 mV (500 mV -25/+20 %).
The response thresholds are < 176 mV (observe the frequency response of the encoder) and > 955 mV.
A signal level of 500 mV peak value corresponds to the numerical value 5333 hex = 21299 dec.
Note:
The analog values of the amplitude error are not measured at the same time with the hardware fault output by the Sensor Module.
See also: p0491 (Motor encoder fault response ENCODER)

Remedy:
- check that the encoder cables and shielding are routed in compliance with EMC.
- check the plug connections.
- replace the encoder or encoder cable.
- check the Sensor Module (e.g. contacts).

Reaction upon N: NONE
Acknowl. upon N: NONE
Reaction upon A: NONE
Acknowl. upon A: NONE

F31117 (N, A) Encoder 1: Inversion error signals A/B/R

Message value: Fault cause: %1 bin

Drive object: SERVO_S110-CAN, SERVO_S110-DP, SERVO_S110-PN

Reaction: ENCODER (IASC/DCBRAKE, NONE)

Acknowledge: IMMEDIATELY

Cause: For a square-wave encoder (bipolar, double ended) signals A*, B* and R* are not inverted with respect to signals A, B and R.

Fault value (r0949, interpret binary):

Bits 0 ... 15: Only for internal Siemens troubleshooting.

Bit 16: Error track A.

Bit 17: Error track B.

Bit 18: Error track R.

Note:

For SMC30 (order no.. 6SL3055-0AA00-5CA0 and 6SL3055-0AA00-5CA1 only), CUA32, and CU310, the following applies:

A square-wave encoder without track R is used and track monitoring (p0405.2 = 1) is activated.

See also: p0491 (Motor encoder fault response ENCODER)

Remedy: - Check the encoder/cable.

- Does the encoder supply signals and the associated inverted signals?

Note:

For SMC30 (order no. 6SL3055-0AA00-5CA0 and 6SL3055-0AA00-5CA1 only), the following applies:

- check the setting of p0405 (p0405.2 = 1 is only possible if the encoder is connected at X520).

For a square-wave encoder without track R, the following jumpers must be set for the connection at X520 (SMC30) or X23 (CUA32, CU310):

- pin 10 (reference signal R) <--> pin 7 (encoder power supply, ground)

- pin 11 (reference signal R inverted) <--> pin 4 (encoder power supply)

Reaction upon N: NONE

Acknowl. upon N: NONE

Reaction upon A: NONE

Acknowl. upon A: NONE

F31118 (N, A) Encoder 1: Speed difference outside the tolerance range

Message value: %1

Drive object: SERVO_S110-CAN, SERVO_S110-DP, SERVO_S110-PN

Reaction: ENCODER (IASC/DCBRAKE, NONE)

Acknowledge: PULSE INHIBIT

Cause: For an HTL/TTL encoder, the speed difference has exceeded the value in p0492 over several sampling cycles.

The change to the averaged speed actual value - if applicable - is monitored in the current controller sampling time.

Encoder 1 is used as motor encoder and can be effective has fault response to change over to encoderless operation.

Fault value (r0949, interpret decimal):

Only for internal Siemens troubleshooting.

See also: p0491 (Motor encoder fault response ENCODER), p0492 (Square-wave encoder maximum speed difference per sampling cycle)

Remedy: - check the tachometer feeder cable for interruptions.

- check the grounding of the tachometer shielding.

- if required, increase the maximum speed difference per sampling cycle (p0492).

Reaction upon N: NONE

Acknowl. upon N: NONE

Reaction upon A: NONE

Acknowl. upon A: NONE

F31120 (N, A) Encoder 1: Power supply voltage fault

Message value: Fault cause: %1 bin

Drive object: SERVO_S110-CAN, SERVO_S110-DP, SERVO_S110-PN

Reaction: ENCODER (IASC/DCBRAKE, NONE)

Acknowledge: PULSE INHIBIT

Cause: A power supply fault was detected for encoder 1.
Fault value (r0949, interpret binary):
Bit 0: Undervoltage condition on the sense line.
Bit 1: Overcurrent condition for the encoder power supply.
Bit 2: Overcurrent condition for encoder power supply on cable resolver excitation negative.
Bit 3: Overcurrent condition for encoder power supply on cable resolver excitation positive.
Note:
If the encoder cables 6FX2002-2EQ00-.... and 6FX2002-2CH00-.... are interchanged, this can result in the encoder being destroyed because the pins of the operating voltage are reversed.
See also: p0491 (Motor encoder fault response ENCODER)

Remedy: Re fault value, bit 0 = 1:
- correct encoder cable connected?
- check the plug connections of the encoder cable.
- SMC30: Check the parameterization (p0404.22).

Re fault value, bit 1 = 1:
- correct encoder cable connected?
- replace the encoder or encoder cable.

Re fault value, bit 2 = 1:
- correct encoder cable connected?
- replace the encoder or encoder cable.

Re fault value, bit 3 = 1:
- correct encoder cable connected?
- replace the encoder or encoder cable.

Reaction upon N: NONE

Acknowl. upon N: NONE

Reaction upon A: NONE

Acknowl. upon A: NONE

F31121 (N, A) Encoder 1: Coarse position error

Message value: -

Drive object: SERVO_S110-CAN, SERVO_S110-DP, SERVO_S110-PN

Reaction: ENCODER (NONE)

Acknowledge: PULSE INHIBIT

Cause: For the actual value sensing, an error was detected on the module.
As a result of this error, it must be assumed that the actual value sensing supplies an incorrect coarse position.
See also: p0491 (Motor encoder fault response ENCODER)

Remedy: Replace the motor with DRIVE-CLiQ or the appropriate Sensor Module.

Reaction upon N: NONE

Acknowl. upon N: NONE

Reaction upon A: NONE

Acknowl. upon A: NONE

F31122 Encoder 1: Internal power supply voltage faulty

Message value: %1

Drive object: SERVO_S110-CAN, SERVO_S110-DP, SERVO_S110-PN

Reaction: ENCODER

Acknowledge: IMMEDIATELY

Cause: Fault in internal reference voltage of ASICs for encoder 1.

Fault value (r0949, interpret decimal):
1: Reference voltage error.
2: Internal undervoltage.
3: Internal overvoltage.

Remedy: Replace the motor with DRIVE-CLiQ or the appropriate Sensor Module.

F31123 (N, A) Encoder 1: Signal level A/B unipolar outside tolerance

Message value: Fault cause: %1 bin
Drive object: SERVO_S110-CAN, SERVO_S110-DP, SERVO_S110-PN
Reaction: ENCODER (IASC/DCBRAKE, NONE)
Acknowledge: PULSE INHIBIT
Cause: The unipolar level (AP/AN or BP/BN) for encoder 1 is outside the permissible tolerance.
Fault value (r0949, interpret binary):
Bit 0 = 1: Either AP or AN outside the tolerance.
Bit 16 = 1: Either BP or BN outside the tolerance.
The unipolar nominal signal level of the encoder must lie in the range 2500 mV +/- 500 mV.
The response thresholds are < 1700 mV and > 3300 mV.
Note:
The signal level is not evaluated unless the following conditions are satisfied:
- Sensor Module properties available (r0459.31 = 1).
- Monitoring active (p0437.31 = 1).
See also: p0491 (Motor encoder fault response ENCODER)
Remedy: - make sure that the encoder cables and shielding are installed in an EMC-compliant manner.
- check the plug connections and contacts of the encoder cable.
- check the short-circuit of a signal cable with mass or the operating voltage.
- replace the encoder cable.
Reaction upon N: NONE
Acknowl. upon N: NONE
Reaction upon A: NONE
Acknowl. upon A: NONE

F31125 (N, A) Encoder 1: Amplitude error track A or B overcontrolled

Message value: A track: %1, B-track: %2
Drive object: SERVO_S110-CAN, SERVO_S110-DP, SERVO_S110-PN
Reaction: ENCODER (IASC/DCBRAKE, NONE)
Acknowledge: PULSE INHIBIT
Cause: The amplitude of track A or B for encoder 1 exceeds the permissible tolerance band.
Fault value (r0949, interpret hexadecimal):
yyyyxxxx hex:
yyyy = Signal level, track B (16 bits with sign).
xxxx = Signal level, track A (16 bits with sign).
The nominal signal level of the encoder must lie in the range 375 mV to 600 mV (500 mV -25/+20 %).
The response threshold is > 750 mV. This fault also occurs if the A/D converter is overcontrolled.
A signal level of 500 mV peak value corresponds to the numerical value 5333 hex = 21299 dec.
Note for Sensor Modules for resolvers (e.g. SMC10):
The nominal signal level is at 2900 mV (2.0 Vrms). The response threshold is > 3582 mV.
A signal level of 2900 mV peak value corresponds to the numerical value 6666 hex = 26214 dec.
Note:
The analog values of the amplitude error are not measured at the same time with the hardware fault output by the Sensor Module.
See also: p0491 (Motor encoder fault response ENCODER)
Remedy: - check that the encoder cables and shielding are routed in compliance with EMC.
- replace the encoder or encoder cable.
Reaction upon N: NONE
Acknowl. upon N: NONE

Reaction upon A: NONE
Acknowl. upon A: NONE

F31126 (N, A) Encoder 1: Amplitude AB too high

Message value: Amplitude: %1, Angle: %2
Drive object: SERVO_S110-CAN, SERVO_S110-DP, SERVO_S110-PN
Reaction: ENCODER (IASC/DCBRAKE, NONE)
Acknowledge: PULSE INHIBIT
Cause: The amplitude (root of A^2 + B^2 or |A| + |B|) for encoder 1 exceeds the permissible tolerance.
Fault value (r0949, interpret hexadecimal):
yyyyxxxx hex:
yyyy = Angle
xxxx = Amplitude, i.e. root from A^2 + B^2 (16 bits without sign)
The nominal signal level of the encoder must lie in the range 375 mV to 600 mV (500 mV -25/+20 %).
The response threshold for (|A| + |B|) is > 1120 mV or the root of (A^2 + B^2) > 955 mV.
A signal level of 500 mV peak value corresponds to the numerical value of 299A hex = 10650 dec.
The angle 0 ... FFFF hex corresponds to 0 ... 360 degrees of the fine position. Zero degrees is at the negative zero crossover of track B.
Note:
The analog values of the amplitude error are not measured at the same time with the hardware fault output by the Sensor Module.
See also: p0491 (Motor encoder fault response ENCODER)
Remedy: - check that the encoder cables and shielding are routed in compliance with EMC.
- replace the encoder or encoder cable.
Reaction upon N: NONE
Acknowl. upon N: NONE
Reaction upon A: NONE
Acknowl. upon A: NONE

F31129 (N, A) Encoder 1: Position difference hall sensor/track C/D and A/B too large

Message value: %1
Drive object: SERVO_S110-CAN, SERVO_S110-DP, SERVO_S110-PN
Reaction: ENCODER (IASC/DCBRAKE, NONE)
Acknowledge: PULSE INHIBIT
Cause: The error for track C/D is greater than +/-15 ° mechanical or +/-60 ° electrical or the error for the Hall signals is greater than +/-60 ° electrical.
One period of track C/D corresponds to 360 ° mechanical.
One period of the Hall signal corresponds to 360 ° electrical.
The monitoring responds if, for example, Hall sensors are connected as equivalent for the C/D tracks with the incorrect rotational sense or supply values that are not accurate enough.
After the fine synchronization using one reference mark or 2 reference marks for distance-coded encoders, this fault is no longer initiated, but instead, Alarm A31429.
Fault value (r0949, interpret decimal):
For track C/D, the following applies:
Measured deviation as mechanical angle (16 bits with sign, 182 dec corresponds to 1 °).
For Hall signals, the following applies:
Measured deviation as electrical angle (16 bits with sign, 182 dec corresponds to 1 °).
See also: p0491 (Motor encoder fault response ENCODER)
Remedy: - track C or D not connected.
- correct the direction of rotation of the Hall sensor possibly connected as equivalent for track C/D.
- check that the encoder cables are routed in compliance with EMC.
- check the adjustment of the Hall sensor.
Reaction upon N: NONE
Acknowl. upon N: NONE
Reaction upon A: NONE
Acknowl. upon A: NONE

F31130 (N, A) Encoder 1: Zero mark and position error from the coarse synchronization

Message value: Angular deviation, electrical: %1, angle, mechanical: %2

Drive object: SERVO_S110-CAN, SERVO_S110-DP, SERVO_S110-PN

Reaction: ENCODER (IASC/DCBRAKE, NONE, OFF1, OFF2, OFF3, STOP1, STOP2)

Acknowledge: PULSE INHIBIT

Cause: After initializing the pole position using track C/D, Hall signals or pole position identification routine, the zero mark was detected outside the permissible range. For distance-coded encoders, the test is carried out after passing 2 zero marks. Fine synchronization was not carried out.

When initializing via track C/D (p0404) then it is checked whether the zero mark occurs in an angular range of +/-18 ° mechanical.

When initializing via Hall sensors (p0404) or pole position identification (p1982) it is checked whether the zero mark occurs in an angular range of +/-60 ° electrical.

Fault value (r0949, interpret hexadecimal):

yyyyxxxx hex

yyyy: Determined mechanical zero mark position (can only be used for track C/D).

xxxx: Deviation of the zero mark from the expected position as electrical angle.

Scaling: 32768 dec = 180 °

See also: p0491 (Motor encoder fault response ENCODER)

Remedy: - Check p0431 and, if necessary, correct (trigger via p1990 = 1 if necessary).

- check that the encoder cables are routed in compliance with EMC.
- check the plug connections.
- if the Hall sensor is used as an equivalent for track C/D, check the connection.
- Check the connection of track C or D.
- replace the encoder or encoder cable.

Reaction upon N: NONE

Acknowl. upon N: NONE

Reaction upon A: NONE

Acknowl. upon A: NONE

F31131 (N, A) Encoder 1: Deviation position incremental/absolute too large

Message value: %1

Drive object: SERVO_S110-CAN, SERVO_S110-DP, SERVO_S110-PN

Reaction: ENCODER (IASC/DCBRAKE, NONE, OFF1, OFF2, OFF3, STOP1, STOP2)

Acknowledge: PULSE INHIBIT

Cause: Absolute encoder:

When cyclically reading the absolute position, an excessively high difference to the incremental position was detected. The absolute position that was read is rejected.

Limit value for the deviation:

- EnDat encoder: Is supplied from the encoder and is a minimum of 2 quadrants (e.g. EQI 1325 > 2 quadrants, EQN 1325 > 50 quadrants).
- other encoders: 15 pulses = 60 quadrants.

Incremental encoder:

When the zero pulse is passed, a deviation in the incremental position was detected.

For equidistant zero marks, the following applies:

- The first zero mark passed supplies the reference point for all subsequent checks. The other zero marks must have n times the distance referred to the first zero mark.

For distance-coded zero marks, the following applies:

- the first zero mark pair supplies the reference point for all subsequent checks. The other zero mark pairs must have the expected distance to the first zero mark pair.

Fault value (r0949, interpret decimal):

Deviation in quadrants (1 pulse = 4 quadrants).

See also: p0491 (Motor encoder fault response ENCODER)

Remedy: - check that the encoder cables are routed in compliance with EMC.
- check the plug connections.
- replace the encoder or encoder cable.
- check whether the coding disk is dirty or there are strong ambient magnetic fields.
- adapt the parameter for the clearance between zero marks (p0425).
- if message output above speed threshold, reduce filter time if necessary (p0438).

Reaction upon N: NONE
Acknowl. upon N: NONE
Reaction upon A: NONE
Acknowl. upon A: NONE

F31135 Encoder 1: Fault when determining the position

Message value: Fault cause: %1 bin
Drive object: SERVO_S110-CAN, SERVO_S110-DP, SERVO_S110-PN
Reaction: ENCODER (IASC/DCBRAKE, NONE)
Acknowledge: PULSE INHIBIT
Cause: The DRIVE-CLiQ encoder supplies status information via bits in an internal status/fault word.
Some of these bits cause this fault to be triggered. Other bits are status displays. The status/fault word is displayed in the fault value.
Fault value (r0949, interpret binary):
Bit 0: F1 (safety status display)
Bit 1: F2 (safety status display)
Bit 2: Lighting (reserved)
Bit 3: Signal amplitude (reserved)
Bit 4: Position value (reserved)
Bit 5: Overvoltage (reserved)
Bit 6: Undervoltage (reserved)
Bit 7: Overcurrent (reserved)
Bit 8: Battery (reserved)
Bit 16: Lighting (--> F3x135, x = 1, 2, 3)
Bit 17: Signal amplitude (--> F3x135, x = 1, 2, 3)
Bit 18: Singleturn position 1 (--> F3x135, x = 1, 2, 3)
Bit 19: Overvoltage (--> F3x135, x = 1, 2, 3)
Bit 20: Undervoltage (--> F3x135, x = 1, 2, 3)
Bit 21: Overcurrent (--> F3x135, x = 1, 2, 3)
Bit 22: Temperature exceeded (--> F3x405, x = 1, 2, 3)
Bit 23: Singleturn position 2 (safety status display)
Bit 24: Singleturn system (--> F3x135, x = 1, 2, 3)
Bit 25: Singleturn power down (--> F3x135, x = 1, 2, 3)
Bit 26: Multiturn position 1 (--> F3x136, x = 1, 2, 3)
Bit 27: Multiturn position 2 (--> F3x136, x = 1, 2, 3)
Bit 28: Multiturn system (--> F3x136, x = 1, 2, 3)
Bit 29: Multiturn power down (--> F3x136, x = 1, 2, 3)
Bit 30: Multiturn overflow/underflow (--> F3x136, x = 1, 2, 3)
Bit 31: Multiturn battery (reserved)
Remedy: Replace DRIVE-CLiQ encoder.

F31136 Encoder 1: Error when determining multiturn information

Message value: Fault cause: %1 bin
Drive object: SERVO_S110-CAN, SERVO_S110-DP, SERVO_S110-PN
Reaction: ENCODER (IASC/DCBRAKE, NONE)
Acknowledge: PULSE INHIBIT
Cause: The DRIVE-CLiQ encoder supplies status information via bits in an internal status/fault word.
Some of these bits cause this fault to be triggered. Other bits are status displays. The status/fault word is displayed in the fault value.

Fault value (r0949, interpret binary):
Bit 0: F1 (safety status display)
Bit 1: F2 (safety status display)
Bit 2: Lighting (reserved)
Bit 3: Signal amplitude (reserved)
Bit 4: Position value (reserved)
Bit 5: Overvoltage (reserved)
Bit 6: Undervoltage (reserved)
Bit 7: Overcurrent (reserved)
Bit 8: Battery (reserved)
Bit 16: Lighting (--> F3x135, x = 1, 2, 3)
Bit 17: Signal amplitude (--> F3x135, x = 1, 2, 3)
Bit 18: Singleturn position 1 (--> F3x135, x = 1, 2, 3)
Bit 19: Overvoltage (--> F3x135, x = 1, 2, 3)
Bit 20: Undervoltage (--> F3x135, x = 1, 2, 3)
Bit 21: Overcurrent (--> F3x135, x = 1, 2, 3)
Bit 22: Temperature exceeded (--> F3x405, x = 1, 2, 3)
Bit 23: Singleturn position 2 (safety status display)
Bit 24: Singleturn system (--> F3x135, x = 1, 2, 3)
Bit 25: Singleturn power down (--> F3x135, x = 1, 2, 3)
Bit 26: Multiturn position 1 (--> F3x136, x = 1, 2, 3)
Bit 27: Multiturn position 2 (--> F3x136, x = 1, 2, 3)
Bit 28: Multiturn system (--> F3x136, x = 1, 2, 3)
Bit 29: Multiturn power down (--> F3x136, x = 1, 2, 3)
Bit 30: Multiturn overflow/underflow (--> F3x136, x = 1, 2, 3)
Bit 31: Multiturn battery (reserved)

Remedy: Replace DRIVE-CLiQ encoder.

F31137 Encoder 1: Internal fault when determining the position

Message value: Fault cause: %1 bin
Drive object: SERVO_S110-CAN, SERVO_S110-DP, SERVO_S110-PN
Reaction: ENCODER (IASC/DCBRAKE, NONE)
Acknowledge: PULSE INHIBIT
Cause: The DRIVE-CLiQ encoder fault word supplies fault bits that have been set.
Fault value (r0949, interpret binary):
Only for internal Siemens troubleshooting.
Remedy: Replace encoder.

F31138 Encoder 1: Internal error when determining multiturn information

Message value: Fault cause: %1 bin
Drive object: SERVO_S110-CAN, SERVO_S110-DP, SERVO_S110-PN
Reaction: ENCODER (IASC/DCBRAKE, NONE)
Acknowledge: PULSE INHIBIT
Cause: The DRIVE-CLiQ encoder fault word supplies fault bits that have been set.
Fault value (r0949, interpret binary):
Only for internal SIEMENS troubleshooting.
Remedy: Replace encoder.

F31150 (N, A) Encoder 1: Initialization error

Message value: %1
Drive object: SERVO_S110-CAN, SERVO_S110-DP, SERVO_S110-PN
Reaction: ENCODER (IASC/DCBRAKE, NONE, OFF1, OFF2, OFF3, STOP1, STOP2)
Acknowledge: PULSE INHIBIT
Cause: Encoder functionality selected in p0404 is not operating correctly.

Fault value (r0949, interpret hexadecimal):
Encoder malfunction.
The bit assignment corresponds to that of p0404 (e.g. bit 5 set: Error track C/D).
See also: p0404 (Encoder configuration effective), p0491 (Motor encoder fault response ENCODER)

Remedy: - Check that p0404 is correctly set.
- check the encoder type used (incremental/absolute) and for SMCxx, the encoder cable.
- if relevant, note additional fault messages that describe the fault in detail.

Reaction upon N: NONE
Acknowl. upon N: NONE
Reaction upon A: NONE
Acknowl. upon A: NONE

F31151 (N, A) Encoder 1: Encoder speed for initialization AB too high

Message value: %1
Drive object: SERVO_S110-CAN, SERVO_S110-DP, SERVO_S110-PN
Reaction: ENCODER (IASC/DCBRAKE, NONE, OFF1, OFF2, OFF3, STOP1, STOP2)
Acknowledge: PULSE INHIBIT
Cause: The encoder speed is too high while initializing the Sensor Module.
Remedy: Reduce the speed of the encoder accordingly during initialization.
If necessary, de-activate monitoring (p0437.29).
See also: p0437 (Sensor Module configuration extended)
Reaction upon N: NONE
Acknowl. upon N: NONE
Reaction upon A: NONE
Acknowl. upon A: NONE

F31160 (N, A) Encoder 1: Analog sensor channel A failed

Message value: %1
Drive object: SERVO_S110-CAN, SERVO_S110-DP, SERVO_S110-PN
Reaction: ENCODER (IASC/DCBRAKE, NONE)
Acknowledge: PULSE INHIBIT
Cause: The input voltage of the analog sensor is outside the permissible limits.
Fault value (r0949, interpret decimal):
1: Input voltage outside detectable measuring range.
2: Input voltage outside the measuring range set in (p4673).
3: The absolute value of the input voltage has exceeded the range limit (p4676).

Remedy: For fault value = 1:
- check the output voltage of the analog sensor.
For fault value = 2:
- check the voltage setting for each encoder period (p4673).
For fault value = 3:
- check the range limit setting and increase it if necessary (p4676).

Reaction upon N: NONE
Acknowl. upon N: NONE
Reaction upon A: NONE
Acknowl. upon A: NONE

F31161 (N, A) Encoder 1: Analog sensor channel B failed

Message value: %1
Drive object: SERVO_S110-CAN, SERVO_S110-DP, SERVO_S110-PN
Reaction: ENCODER (IASC/DCBRAKE, NONE)
Acknowledge: PULSE INHIBIT
Cause: The input voltage of the analog sensor is outside the permissible limits.

Fault value (r0949, interpret decimal):
1: Input voltage outside detectable measuring range.
2: Input voltage outside the measuring range set in (p4675).
3: The absolute value of the input voltage has exceeded the range limit (p4676).

Remedy: For fault value = 1:
- check the output voltage of the analog sensor.
For fault value = 2:
- check the voltage setting for each encoder period (p4675).
For fault value = 3:
- check the range limit setting and increase it if necessary (p4676).

Reaction upon N: NONE
Acknowl. upon N: NONE
Reaction upon A: NONE
Acknowl. upon A: NONE

F31163 (N, A) Encoder 1: Analog sensor position value exceeds limit value

Message value: %1
Drive object: SERVO_S110-CAN, SERVO_S110-DP, SERVO_S110-PN
Reaction: ENCODER (IASC/DCBRAKE, NONE)
Acknowledge: PULSE INHIBIT
Cause: The position value has exceeded the permissible range of -0.5 ... +0.5.
Fault value (r0949, interpret decimal):
1: Position value from the LVDT sensor.
2: Position value from the encoder characteristic.

Remedy: For fault value = 1:
- Check the LVDT ratio (p4678).
- check the reference signal connection at track B.
For fault value = 2:
- check the coefficients of the characteristic (p4663 ... p4666).

Reaction upon N: NONE
Acknowl. upon N: NONE
Reaction upon A: NONE
Acknowl. upon A: NONE

A31400 (F, N) Encoder 1: Alarm threshold zero mark distance error

Message value: %1
Drive object: SERVO_S110-CAN, SERVO_S110-DP, SERVO_S110-PN
Reaction: NONE
Acknowledge: NONE
Cause: The measured zero mark distance does not correspond to the parameterized zero mark distance.
For distance-coded encoders, the zero mark distance is determined from zero marks detected pairs. This means that if a zero mark is missing, depending on the pair generation, this cannot result in a fault and also has no effect in the system.
The zero mark distance for the zero mark monitoring is set in p0425 (rotary encoder) or p0424 (linear encoder).
Alarm value (r2124, interpret decimal):
Last measured zero mark distance in increments (4 increments = 1 encoder pulse).
The sign designates the direction of motion when detecting the zero mark distance.

Remedy:
- check that the encoder cables are routed in compliance with EMC.
- check the plug connections.
- check the encoder type (encoder with equidistant zero marks).
- adapt the parameter for the distance between zero marks (p0424, p0425).
- replace the encoder or encoder cable.

Reaction upon F: NONE (ENCODER, IASC/DCBRAKE, OFF1, OFF2, OFF3, STOP1, STOP2)
Acknowl. upon F: IMMEDIATELY
Reaction upon N: NONE
Acknowl. upon N: NONE

A31401 (F, N) Encoder 1: Alarm threshold zero mark failed

Message value: %1
Drive object: SERVO_S110-CAN, SERVO_S110-DP, SERVO_S110-PN
Reaction: NONE
Acknowledge: NONE
Cause: The 1.5 x parameterized zero mark distance was exceeded.
The zero mark distance for the zero mark monitoring is set in p0425 (rotary encoder) or p0424 (linear encoder).
Alarm value (r2124, interpret decimal):
Number of increments after POWER ON or since the last zero mark that was detected (4 increments = 1 encoder pulse).
Remedy: - check that the encoder cables are routed in compliance with EMC.
- check the plug connections.
- check the encoder type (encoder with equidistant zero marks).
- adapt the parameter for the clearance between zero marks (p0425).
- replace the encoder or encoder cable.
Reaction upon F: NONE (ENCODER, IASC/DCBRAKE, OFF1, OFF2, OFF3, STOP1, STOP2)
Acknowl. upon F: IMMEDIATELY
Reaction upon N: NONE
Acknowl. upon N: NONE

F31405 (N, A) Encoder 1: Temperature in the encoder evaluation inadmissible

Message value: %1
Drive object: SERVO_S110-CAN, SERVO_S110-DP, SERVO_S110-PN
Reaction: ENCODER (IASC/DCBRAKE, NONE, OFF1, OFF2, OFF3, STOP1, STOP2)
Acknowledge: IMMEDIATELY (POWER ON)
Cause: The encoder evaluation for a motor with DRIVE-CLiQ has detected an inadmissible temperature.
The fault threshold is 125 ° C.
Alarm value (r2124, interpret decimal):
Measured board/module temperature in 0.1 °C.
Remedy: Reduce the ambient temperature for the DRIVE-CLiQ connection of the motor.
Reaction upon N: NONE
Acknowl. upon N: NONE
Reaction upon A: NONE
Acknowl. upon A: NONE

A31407 (F, N) Encoder 1: Function limit reached

Message value: %1
Drive object: SERVO_S110-CAN, SERVO_S110-DP, SERVO_S110-PN
Reaction: NONE
Acknowledge: NONE
Cause: The encoder has reached one of its function limits. A service is recommended.
Alarm value (r2124, interpret decimal):
1 : Incremental signals
3 : Absolute track
4 : Code connection
Remedy: Perform service. Replace the encoder if necessary.
Note:
The actual functional reserve of an encoder can be displayed via r4651.
See also: p4650 (Encoder functional reserve component number), r4651 (Encoder functional reserve)
Reaction upon F: NONE (ENCODER, IASC/DCBRAKE, OFF1, OFF2, OFF3, STOP1, STOP2)
Acknowl. upon F: IMMEDIATELY
Reaction upon N: NONE
Acknowl. upon N: NONE

A31410 (F, N) Encoder 1: Serial communications

Message value: Fault cause: %1 bin
Drive object: SERVO_S110-CAN, SERVO_S110-DP, SERVO_S110-PN
Reaction: NONE
Acknowledge: NONE
Cause: Serial communication protocol transfer error between the encoder and evaluation module.
Alarm value (r2124, interpret binary):
Bit 0: Alarm bit in the position protocol.
Bit 1: Incorrect quiescent level on the data line.
Bit 2: Encoder does not respond (does not supply a start bit within 50 ms).
Bit 3: CRC error: The checksum in the protocol from the encoder does not match the data.
Bit 4: Encoder acknowledgement error: The encoder incorrectly understood the task (request) or cannot execute it.
Bit 5: Internal error in the serial driver: An illegal mode command was requested.
Bit 6: Timeout when cyclically reading.
Bit 8: Protocol is too long (e.g. > 64 bits).
Bit 9: Receive buffer overflow.
Bit 10: Frame error when reading twice.
Bit 11: Parity error.
Bit 12: Data line signal level error during the monoflop time.
Remedy: - check that the encoder cables are routed in compliance with EMC.
- check the plug connections.
- replace encoder.
Reaction upon F: NONE (ENCODER, IASC/DCBRAKE, OFF1, OFF2, OFF3, STOP1, STOP2)
Acknowl. upon F: IMMEDIATELY
Reaction upon N: NONE
Acknowl. upon N: NONE

A31411 (F, N) Encoder 1: EnDat encoder signals alarms

Message value: Fault cause: %1 bin
Drive object: SERVO_S110-CAN, SERVO_S110-DP, SERVO_S110-PN
Reaction: NONE
Acknowledge: NONE
Cause: The error word of the EnDat encoder has alarm bits that have been set.
Alarm value (r2124, interpret binary):
Bit 0: Frequency exceeded (speed too high).
Bit 1: Temperature exceeded.
Bit 2: Control reserve, lighting system exceeded.
Bit 3: Battery discharged.
Bit 4: Reference point passed.
See also: p0491 (Motor encoder fault response ENCODER)
Remedy: Replace encoder.
Reaction upon F: NONE (ENCODER, IASC/DCBRAKE, OFF1, OFF2, OFF3, STOP1, STOP2)
Acknowl. upon F: IMMEDIATELY
Reaction upon N: NONE
Acknowl. upon N: NONE

A31412 (F, N) Encoder 1: Error bit set in the serial protocol

Message value: %1
Drive object: SERVO_S110-CAN, SERVO_S110-DP, SERVO_S110-PN
Reaction: NONE
Acknowledge: NONE
Cause: The encoder sends a set error bit via the serial protocol.
Alarm value (r2124, interpret binary):
Bit 0: Fault bit in the position protocol.
Bit 1: Alarm bit in the position protocol.

Remedy: - carry out a POWER ON (power off/on) for all components.
- check that the encoder cables are routed in compliance with EMC.
- check the plug connections.
- replace encoder.

Reaction upon F: NONE (ENCODER, IASC/DCBRAKE, OFF1, OFF2, OFF3, STOP1, STOP2)
Acknowl. upon F: IMMEDIATELY
Reaction upon N: NONE
Acknowl. upon N: NONE

A31414 (F, N) Encoder 1: Amplitude error track C or D (C^2 + D^2)

Message value: C track: %1, D track: %2
Drive object: SERVO_S110-CAN, SERVO_S110-DP, SERVO_S110-PN
Reaction: NONE
Acknowledge: NONE
Cause: The amplitude (C^2 + D^2) of track C or D of the encoder or from the Hall signals, is not within the tolerance bandwidth.
Alarm value (r2124, interpret hexadecimal):
yyyyxxxx hex:
yyyy = Signal level, track D (16 bits with sign).
xxxx = Signal level, track C (16 bits with sign).
The nominal signal level of the encoder must lie in the range 375 mV to 600 mV (500 mV -25/+20 %).
The response thresholds are < 230 mV (observe the frequency response of the encoder) and > 750 mV.
A signal level of 500 mV peak value corresponds to the numerical value 5333 hex = 21299 dec.
Note:
If the amplitude is not within the tolerance bandwidth, then it cannot be used to initialize the start position.
Remedy: - check that the encoder cables are routed in compliance with EMC.
- check the plug connections.
- replace the encoder or encoder cable.
- check the Sensor Module (e.g. contacts).
- check the Hall sensor box.

Reaction upon F: NONE (ENCODER, IASC/DCBRAKE, OFF1, OFF2, OFF3, STOP1, STOP2)
Acknowl. upon F: IMMEDIATELY
Reaction upon N: NONE
Acknowl. upon N: NONE

N31415 (F, A) Encoder 1: Amplitude alarm track A or B (A^2 + B^2)

Message value: Amplitude: %1, Angle: %2
Drive object: SERVO_S110-CAN, SERVO_S110-DP, SERVO_S110-PN
Reaction: NONE
Acknowledge: NONE
Cause: The amplitude (root of A^2 + B^2) for encoder 1 exceeds the permissible tolerance.
Alarm value (r2124, interpret hexadecimal):
yyyyxxxx hex:
yyyy = Angle
xxxx = Amplitude, i.e. root from A^2 + B^2 (16 bits without sign)
The nominal signal level of the encoder must lie in the range 375 mV to 600 mV (500 mV -25/+20 %).
The response threshold is < 300 mV (observe the frequency response of the encoder).
A signal level of 500 mV peak value corresponds to the numerical value 299A hex = 10650 dec.
The angle 0 ... FFFF hex corresponds to 0 ... 360 degrees of the fine position. Zero degrees is at the negative zero crossover of track B.
Note for Sensor Modules for resolvers (e.g. SMC10):
The nominal signal level is at 2900 mV (2.0 Vrms). The response threshold is < 1414 mV (1.0 Vrms).
A signal level of 2900 mV peak value corresponds to the numerical value 3333 hex = 13107 dec.

Note:
The analog values of the amplitude error are not measured at the same time with the hardware fault output by the Sensor Module.
See also: p0491 (Motor encoder fault response ENCODER)

Remedy:
- check the speed range, frequency characteristic (amplitude characteristic) of the measuring equipment is not sufficient for the speed range.
- check that the encoder cables and shielding are routed in compliance with EMC.
- check the plug connections.
- replace the encoder or encoder cable.
- check the Sensor Module (e.g. contacts).
- if the coding disk is soiled or the lighting aged, replace the encoder.

Reaction upon F: NONE (ENCODER, IASC/DCBRAKE, OFF1, OFF2, OFF3, STOP1, STOP2)
Acknowl. upon F: IMMEDIATELY
Reaction upon A: NONE
Acknowl. upon A: NONE

A31418 (F, N) Encoder 1: Speed difference per sampling rate exceeded

Message value: %1
Drive object: SERVO_S110-CAN, SERVO_S110-DP, SERVO_S110-PN
Reaction: NONE
Acknowledge: NONE
Cause: For an HTL/TTL encoder, the speed difference between two sampling cycles has exceeded the value in p0492.
The change to the averaged speed actual value - if applicable - is monitored in the current controller sampling time.
Alarm value (r2124, interpret decimal):
Only for internal Siemens troubleshooting.
See also: p0492 (Square-wave encoder maximum speed difference per sampling cycle)

Remedy:
- check the tachometer feeder cable for interruptions.
- check the grounding of the tachometer shielding.
- if required, increase the setting of p0492.

Reaction upon F: NONE (IASC/DCBRAKE, OFF1, OFF2, OFF3, STOP1, STOP2)
Acknowl. upon F: IMMEDIATELY
Reaction upon N: NONE
Acknowl. upon N: NONE

A31419 (F, N) Encoder 1: Track A or B outside tolerance

Message value: %1
Drive object: SERVO_S110-CAN, SERVO_S110-DP, SERVO_S110-PN
Reaction: NONE
Acknowledge: NONE
Cause: The amplitude/phase/offset correction for track A or B is at the limit.
Amplitude error correction: Amplitude B / Amplitude A = 0.78 ... 1.27
Phase: <84 degrees or >96 degrees
SMC20: Offset correction: +/-140 mV
SMC10: Offset correction: +/-650 mV
Alarm value (r2124, interpret hexadecimal):
xxxx1: Minimum of the offset correction, track B
xxxx2: Maximum of the offset correction, track B
xxx1x: Minimum of the offset correction, track A
xxx2x: Maximum of the offset correction, track A
xx1xx: Minimum of the amplitude correction, track B/A
xx2xx: Maximum of the amplitude correction, track B/A
x1xxx: Minimum of the phase error correction
x2xxx: Maximum of the phase error correction
1xxxx: Minimum of the cubic correction
2xxxx: Maximum of the cubic correction
See also: p0491 (Motor encoder fault response ENCODER)

Remedy: - check mechanical mounting tolerances for encoders without their own bearings (e.g. toothed-wheel encoders).
- check the plug connections (also the transition resistance).
- check the encoder signals.
- replace the encoder or encoder cable.

Reaction upon F: NONE (ENCODER, IASC/DCBRAKE, OFF1, OFF2, OFF3, STOP1, STOP2)
Acknowl. upon F: IMMEDIATELY
Reaction upon N: NONE
Acknowl. upon N: NONE

A31421 (F, N) Encoder 1: Coarse position error

Message value: %1
Drive object: SERVO_S110-CAN, SERVO_S110-DP, SERVO_S110-PN
Reaction: NONE
Acknowledge: NONE
Cause: For the actual value sensing, an error was detected. As a result of this error, it must be assumed that the actual value sensing supplies an incorrect coarse position.
Alarm value (r2124, interpret decimal):
3: The absolute position of the serial protocol and track A/B differ by half an encoder pulse. The absolute position must have its zero position in the quadrants in which both tracks are negative. In the case of a fault, the position can be incorrect by one encoder pulse.
Remedy: Re alarm value = 3:
- For a standard encoder with cable, contact the manufacturer where relevant.
- correct the assignment of the tracks to the position value that is serially transferred. To do this, the two tracks must be connected, inverted, at the Sensor Module (interchange A with A* and B with B*) or, for a programmable encoder, check the zero offset of the position.

Reaction upon F: NONE (ENCODER, IASC/DCBRAKE, OFF1, OFF2, OFF3, STOP1, STOP2)
Acknowl. upon F: IMMEDIATELY
Reaction upon N: NONE
Acknowl. upon N: NONE

A31422 (F, N) Encoder 1: Pulses per revolution square-wave encoder outside tolerance bandwidth

Message value: %1
Drive object: SERVO_S110-CAN, SERVO_S110-DP, SERVO_S110-PN
Reaction: NONE
Acknowledge: NONE
Cause: The measured zero mark distance does not correspond to the parameterized zero mark distance.
This alarm is triggered with active square-wave encoder PPR correction and re-parameterized fault 31131 if the accumulator contains larger values than p4683 or p4684.
The zero mark distance for zero mark monitoring is set in p0425 (rotary encoder).
Alarm value (r2124, interpret decimal):
accumulated differential pulses in encoder pulses.
See also: p0491 (Motor encoder fault response ENCODER)
Remedy: - check that the encoder cables are routed in compliance with EMC.
- check the plug connections.
- check the encoder type (encoder with equidistant zero marks).
- adapt the parameter for the distance between zero marks (p0424, p0425).
- replace the encoder or encoder cable.

Reaction upon F: NONE (ENCODER, IASC/DCBRAKE, OFF1, OFF2, OFF3, STOP1, STOP2)
Acknowl. upon F: IMMEDIATELY
Reaction upon N: NONE
Acknowl. upon N: NONE

A31429 (F, N) Encoder 1: Position difference hall sensor/track C/D and A/B too large

Message value: %1

Drive object: SERVO_S110-CAN, SERVO_S110-DP, SERVO_S110-PN

Reaction: NONE

Acknowledge: NONE

Cause: The error for track C/D is greater than +/-15 ° mechanical or +/-60 ° electrical or the error for the Hall signals is greater than +/-60 ° electrical.
One period of track C/D corresponds to 360 ° mechanical.
One period of the Hall signal corresponds to 360 ° electrical.
The monitoring responds if, for example, Hall sensors are connected as equivalent for the C/D tracks with the incorrect rotational sense or supply values that are not accurate enough.
Alarm value (r2124, interpret decimal):
For track C/D, the following applies:
Measured deviation as mechanical angle (16 bits with sign, 182 dec corresponds to 1 °).
For Hall signals, the following applies:
Measured deviation as electrical angle (16 bits with sign, 182 dec corresponds to 1 °).
See also: p0491 (Motor encoder fault response ENCODER)

Remedy: - track C or D not connected.
- correct the direction of rotation of the Hall sensor possibly connected as equivalent for track C/D.
- check that the encoder cables are routed in compliance with EMC.
- check the adjustment of the Hall sensor.

Reaction upon F: NONE (ENCODER, IASC/DCBRAKE, OFF1, OFF2, OFF3, STOP1, STOP2)

Acknowl. upon F: IMMEDIATELY

Reaction upon N: NONE

Acknowl. upon N: NONE

A31431 (F, N) Encoder 1: Deviation position incremental/absolute too large

Message value: %1

Drive object: SERVO_S110-CAN, SERVO_S110-DP, SERVO_S110-PN

Reaction: NONE

Acknowledge: NONE

Cause: When the zero pulse is passed, a deviation in the incremental position was detected.
For equidistant zero marks, the following applies:
- The first zero mark passed supplies the reference point for all subsequent checks. The other zero marks must have n times the distance referred to the first zero mark.
For distance-coded zero marks, the following applies:
- the first zero mark pair supplies the reference point for all subsequent checks. The other zero mark pairs must have the expected distance to the first zero mark pair.
Alarm value (r2124, interpret decimal):
Deviation in quadrants (1 pulse = 4 quadrants).
See also: p0491 (Motor encoder fault response ENCODER)

Remedy: - check that the encoder cables are routed in compliance with EMC.
- check the plug connections.
- replace the encoder or encoder cable.
- Clean coding disk or remove strong magnetic fields.

Reaction upon F: NONE (ENCODER, IASC/DCBRAKE, OFF1, OFF2, OFF3, STOP1, STOP2)

Acknowl. upon F: IMMEDIATELY

Reaction upon N: NONE

Acknowl. upon N: NONE

A31432 (F, N) Encoder 1: Rotor position adaptation corrects deviation

Message value: %1
Drive object: SERVO_S110-CAN, SERVO_S110-DP, SERVO_S110-PN
Reaction: NONE
Acknowledge: NONE
Cause: For track A/B, pulses have been lost or too many have been counted. These pulses are presently being corrected.
Alarm value (r2124, interpret decimal):
Last measured deviation of zero mark in increments (4 increments = 1 encoder pulse).
The sign designates the direction of motion when detecting the zero mark distance.
Remedy: - check that the encoder cables are routed in compliance with EMC.
- check the plug connections.
- replace the encoder or encoder cable.
- check encoder limit frequency.
- adapt the parameter for the distance between zero marks (p0424, p0425).
Reaction upon F: NONE (ENCODER, IASC/DCBRAKE, OFF1, OFF2, OFF3, STOP1, STOP2)
Acknowl. upon F: IMMEDIATELY
Reaction upon N: NONE
Acknowl. upon N: NONE

A31442 (F, N) Encoder 1: Battery voltage pre-alarm

Message value: -
Drive object: SERVO_S110-CAN, SERVO_S110-DP, SERVO_S110-PN
Reaction: NONE
Acknowledge: NONE
Cause: When switched-off, the encoder uses a battery to back up the multiturn information. The battery voltage is no longer sufficient to check the multiturn information.
Remedy: Replace battery.
Reaction upon F: NONE (ENCODER, IASC/DCBRAKE, OFF1, OFF2, OFF3, STOP1, STOP2)
Acknowl. upon F: IMMEDIATELY
Reaction upon N: NONE
Acknowl. upon N: NONE

A31443 (F, N) Encoder 1: Unipolar CD signal level outside specification

Message value: Fault cause: %1 bin
Drive object: SERVO_S110-CAN, SERVO_S110-DP, SERVO_S110-PN
Reaction: NONE
Acknowledge: NONE
Cause: The unipolar level (CP/CN or DP/DN) for encoder 1 is outside the permissible tolerance.
Alarm value (r2124, interpret binary):
Bit 0 = 1: Either CP or CN outside the tolerance.
Bit 16 = 1: Either DP or DN outside the tolerance.
The unipolar nominal signal level of the encoder must lie in the range 2500 mV +/- 500 mV.
The response thresholds are < 1700 mV and > 3300 mV.
Note:
The signal level is not evaluated unless the following conditions are satisfied:
- Sensor Module properties available (r0459.31 = 1).
- Monitoring active (p0437.31 = 1).
See also: p0491 (Motor encoder fault response ENCODER)
Remedy: - check that the encoder cables and shielding are routed in compliance with EMC.
- check the plug connections and contacts of the encoder cable.
- are the C/D tracks connected correctly (have the signal lines CP and CN or DP and DN been interchanged)?
- replace the encoder cable.
Reaction upon F: NONE (ENCODER, IASC/DCBRAKE, OFF1, OFF2, OFF3, STOP1, STOP2)
Acknowl. upon F: IMMEDIATELY

Reaction upon N: NONE
Acknowl. upon N: NONE

A31460 (N) Encoder 1: Analog sensor channel A failed

Message value: %1
Drive object: SERVO_S110-CAN, SERVO_S110-DP, SERVO_S110-PN
Reaction: NONE
Acknowledge: NONE
Cause: The input voltage of the analog sensor is outside the permissible limits.
Alarm value (r2124, interpret decimal):
1: Input voltage outside detectable measuring range.
2: Input voltage outside measuring range set in p4673.
3: The absolute value of the input voltage has exceeded the range limit (p4676).
Remedy: Re alarm value = 1:
- check the output voltage of the analog sensor.
Re alarm value = 2:
- check the voltage setting for each encoder period (p4673).
Re alarm value = 3:
- check the range limit setting and increase it if necessary (p4676).
Reaction upon N: NONE
Acknowl. upon N: NONE

A31461 (N) Encoder 1: Analog sensor channel B failed

Message value: %1
Drive object: SERVO_S110-CAN, SERVO_S110-DP, SERVO_S110-PN
Reaction: NONE
Acknowledge: NONE
Cause: The input voltage of the analog sensor is outside the permissible limits.
Alarm value (r2124, interpret decimal):
1: Input voltage outside detectable measuring range.
2: Input voltage outside the measuring range set in (p4675).
3: The absolute value of the input voltage has exceeded the range limit (p4676).
Remedy: Re alarm value = 1:
- check the output voltage of the analog sensor.
Re alarm value = 2:
- check the voltage setting for each encoder period (p4675).
Re alarm value = 3:
- check the range limit setting and increase it if necessary (p4676).
Reaction upon N: NONE
Acknowl. upon N: NONE

A31462 (N) Encoder 1: Analog sensor no channel active

Message value: %1
Drive object: SERVO_S110-CAN, SERVO_S110-DP, SERVO_S110-PN
Reaction: NONE
Acknowledge: NONE
Cause: Channel A and B are not activated for the analog sensor.
Remedy: - activate channel A and/or channel B (p4670).
- check the encoder configuration (p0404.17).
See also: p4670 (Analog sensor configuration)
Reaction upon N: NONE
Acknowl. upon N: NONE

A31463 (N) Encoder 1: Analog sensor position value exceeds limit value

Message value: %1
Drive object: SERVO_S110-CAN, SERVO_S110-DP, SERVO_S110-PN
Reaction: NONE
Acknowledge: NONE
Cause: The position value has exceeded the permissible range of -0.5 ... +0.5.
Alarm value (r2124, interpret decimal):
1: Position value from the LVDT sensor.
2: Position value from the encoder characteristic.
Remedy: Re alarm value = 1:
- Check the LVDT ratio (p4678).
- check the reference signal connection at track B.
Re alarm value = 2:
- check the coefficients of the characteristic (p4663 ... p4666).
Reaction upon N: NONE
Acknowl. upon N: NONE

A31470 (F, N) Encoder 1: Soiling detected

Message value: -
Drive object: SERVO_S110-CAN, SERVO_S110-DP, SERVO_S110-PN
Reaction: NONE
Acknowledge: NONE
Cause: In the case of the alternative encoder system interface on the Sensor Module Cabinet 30 (SMC30), encoder soiling is signaled via a 0 signal at terminal X521.7.
Remedy: - check the plug connections.
- replace the encoder or encoder cable.
Reaction upon F: NONE (ENCODER, IASC/DCBRAKE, OFF1, OFF2, OFF3, STOP1, STOP2)
Acknowl. upon F: IMMEDIATELY
Reaction upon N: NONE
Acknowl. upon N: NONE

F31500 (N, A) Encoder 1: Position tracking traversing range exceeded

Message value: -
Drive object: SERVO_S110-CAN, SERVO_S110-DP, SERVO_S110-PN
Reaction: OFF1 (NONE, OFF2, OFF3)
Acknowledge: IMMEDIATELY
Cause: For a configured linear axis without modulo correction, the drive/encoder has exceeded the maximum possible traversing range. The value should be read in p0412 and interpreted as the number of motor revolutions.
For p0411.0 = 1, the maximum traversing range for the configured linear axis is defined to be 64x (+/- 32x) of p0421.
For p0411.3 = 1, the maximum traversing range for the configured linear axis is pre-set (default value) to the highest possible value and is +/-p0412/2 (rounded off to complete revolutions). The highest possible value depends on the pulse number (p0408) and the fine resolution (p0419).
Remedy: The fault should be resolved as follows:
- select encoder commissioning (p0010 = 4).
- reset the position tracking as follows (p0411.2 = 1).
- de-select encoder commissioning (p0010 = 0).
The fault should then be acknowledged and the absolute encoder adjusted.
Reaction upon N: NONE
Acknowl. upon N: NONE
Reaction upon A: NONE
Acknowl. upon A: NONE

F31501 (N, A) Encoder 1: Position tracking encoder position outside tolerance window

Message value: %1
Drive object: SERVO_S110-CAN, SERVO_S110-DP, SERVO_S110-PN
Reaction: OFF1 (NONE, OFF2, OFF3)
Acknowledge: IMMEDIATELY
Cause: When powered down, the drive/encoder was moved through a distance greater than was parameterized in the tolerance window. It is possible that there is no longer any reference between the mechanical system and encoder.
Fault value (r0949, interpret decimal):
Deviation (difference) to the last encoder position in increments of the absolute value.
The sign designates the traversing direction.
Note:
The deviation (difference) found is also displayed in r0477.
Remedy: Reset the position tracking as follows:
- select encoder commissioning (p0010 = 4).
- reset the position tracking as follows (p0411.2 = 1).
- de-select encoder commissioning (p0010 = 0).
The fault should then be acknowledged and, if necessary, the absolute encoder adjusted (p2507).
See also: p0010 (Drive commissioning parameter filter), p2507 (LR absolute encoder adjustment status)
Reaction upon N: NONE
Acknowl. upon N: NONE
Reaction upon A: NONE
Acknowl. upon A: NONE

A31700 Encoder 1: Effectivity test does not supply the expected value

Message value: Fault cause: %1 bin
Drive object: SERVO_S110-CAN, SERVO_S110-DP, SERVO_S110-PN
Reaction: NONE
Acknowledge: NONE
Cause: The DRIVE-CLiQ encoder fault word supplies fault bits that have been set.
Fault value (r0949, interpret binary):
Bit x = 1: Effectivity test x unsuccessful.
Remedy: Replace encoder.

N31800 (F) Encoder 1: Group signal

Message value: -
Drive object: SERVO_S110-CAN, SERVO_S110-DP, SERVO_S110-PN
Reaction: ENCODER (IASC/DCBRAKE, NONE)
Acknowledge: NONE
Cause: The motor encoder has detected at least one fault.
See also: p0491 (Motor encoder fault response ENCODER)
Remedy: Evaluate the other messages that are presently available.
Reaction upon F: ENCODER (IASC/DCBRAKE, NONE)
Acknowl. upon F: IMMEDIATELY

F31801 (N, A) Encoder 1 DRIVE-CLiQ: Sign-of-life missing

Message value: Component number: %1, fault cause: %2
Drive object: SERVO_S110-CAN, SERVO_S110-DP, SERVO_S110-PN
Reaction: ENCODER (IASC/DCBRAKE, NONE)
Acknowledge: IMMEDIATELY
Cause: A DRIVE-CLiQ communication error has occurred from the Control Unit to the encoder involved.
Fault value (r0949, interpret hexadecimal):
yyxx hex: yy = component number, xx = fault cause
xx = 0A hex:
The sign-of-life bit in the receive telegram is not set.
See also: p0491 (Motor encoder fault response ENCODER)

Remedy: - check the electrical cabinet design and cable routing for EMC compliance
- replace the component involved.
See also: p9916 (DRIVE-CLiQ data transfer error shutdown threshold slave)
Reaction upon N: NONE
Acknowl. upon N: NONE
Reaction upon A: NONE
Acknowl. upon A: NONE

F31802 (N, A) Encoder 1: Time slice overflow

Message value: %1
Drive object: SERVO_S110-CAN, SERVO_S110-DP, SERVO_S110-PN
Reaction: ENCODER (IASC/DCBRAKE, NONE)
Acknowledge: IMMEDIATELY
Cause: A time slice overflow has occurred in encoder 1.
Fault value (r0949, interpret decimal):
9: Time slice overflow of the fast (current controller clock cycle) time slice.
10: Time slice overflow of the average time slice.
12: Time slice overflow of the slow time slice.
999: Timeout when waiting for SYNO (e.g. unexpected return to non-cyclic operation).
See also: p0491 (Motor encoder fault response ENCODER)
Remedy: Reduce the current controller frequency.
Reaction upon N: NONE
Acknowl. upon N: NONE
Reaction upon A: NONE
Acknowl. upon A: NONE

F31804 (N, A) Encoder 1: Checksum error

Message value: %1
Drive object: SERVO_S110-CAN, SERVO_S110-DP, SERVO_S110-PN
Reaction: ENCODER (IASC/DCBRAKE, NONE)
Acknowledge: IMMEDIATELY
Cause: A checksum error has occurred when reading-out the program memory on the Sensor Module.
Fault value (r0949, interpret hexadecimal):
yyyyxxxx hex
yyyy: Memory area involved.
xxxx: Difference between the checksum at POWER ON and the actual checksum.
See also: p0491 (Motor encoder fault response ENCODER)
Remedy: - check whether the permissible ambient temperature for the component is maintained.
- replace the Sensor Module.
Reaction upon N: NONE
Acknowl. upon N: NONE
Reaction upon A: NONE
Acknowl. upon A: NONE

F31805 (N, A) Encoder 1: EPROM checksum error

Message value: %1
Drive object: SERVO_S110-CAN, SERVO_S110-DP, SERVO_S110-PN
Reaction: ENCODER (IASC/DCBRAKE, NONE)
Acknowledge: IMMEDIATELY
Cause: Internal parameter data is corrupted.
Fault value (r0949, interpret hexadecimal):
01: EEPROM access error.
02: Too many blocks in the EEPROM.
See also: p0491 (Motor encoder fault response ENCODER)
Remedy: Replace the module.

Reaction upon N: NONE
Acknowl. upon N: NONE
Reaction upon A: NONE
Acknowl. upon A: NONE

F31806 (N, A) Encoder 1: Initialization error

Message value: %1
Drive object: SERVO_S110-CAN, SERVO_S110-DP, SERVO_S110-PN
Reaction: ENCODER (IASC/DCBRAKE, NONE)
Acknowledge: PULSE INHIBIT
Cause: The encoder was not successfully initialized.
Fault value (r0949, interpret hexadecimal):
Bit 0, 1: Encoder initialization with the motor rotating has failed (deviation involving coarse and fine position in encoder pulses/4).
Bit 2: Mid-voltage matching for track A unsuccessful.
Bit 3: Mid-voltage matching for track B unsuccessful.
Bit 4: Mid-voltage matching for acceleration input unsuccessful.
Bit 5: Mid-voltage matching for track safety A unsuccessful.
Bit 6: Mid-voltage matching for track safety B unsuccessful.
Bit 7: Mid-voltage matching for track C unsuccessful.
Bit 8: Mid-voltage matching for track D unsuccessful.
Bit 9: Mid-voltage matching for track R unsuccessful.
Bit 10: The difference in mid-voltages between A and B is too great (> 0.5 V)
Bit 11: The difference in mid-voltages between C and D is too great (> 0.5 V)
Bit 12: The difference in mid-voltages between safety A and safety B is too great (> 0.5 V)
Bit 13: The difference in mid-voltages between A and safety B is too great (> 0.5 V)
Bit 14: The difference in mid-voltages between B and safety A is too great (> 0.5 V)
Bit 15: The standard deviation of the calculated mid-voltages is too great (> 0.3 V)
Bit 16: Internal fault - fault reading a register (CAFE)
Bit 17: Internal fault - fault writing a register (CAFE)
Bit 18: Internal fault: No mid-voltage matching available
Bit 19: Internal error - ADC access error.
Bit 20: Internal error - no zero crossover found.
Note:
Bit 0, 1: Up to 6SL3055-0AA00-5*A0
Bits 2 ... 20: 6SL3055-0AA00-5*A1 and higher
See also: p0491 (Motor encoder fault response ENCODER)
Remedy: Acknowledge fault.
If the fault cannot be acknowledged:
Bits 2 ... 9: Check encoder power supply.
Bits 2 ... 14: Check the corresponding cable.
Bit 15 with no other bits: Check track R, check settings in p0404.
Reaction upon N: NONE
Acknowl. upon N: NONE
Reaction upon A: NONE
Acknowl. upon A: NONE

A31811 (F, N) Encoder 1: Encoder serial number changed

Message value: -
Drive object: SERVO_S110-CAN, SERVO_S110-DP, SERVO_S110-PN
Reaction: NONE
Acknowledge: NONE
Cause: The serial number of the motor encoder of a synchronous motor has changed. The change was only checked for encoders with serial number (e.g. EnDat encoders) and build-in motors (e.g. p0300 = 401) or third-party motors (p0300 = 2).

Cause 1:
- The encoder was replaced.
Cause 2:
- A third-party, built-in or linear motor was re-commissioned.
Cause 3:
- The motor with integrated and adjusted encoder was replaced.
Cause 4:
- The firmware was updated to a version that checks the encoder serial number.
Note:
With closed-loop position control, the serial number is accepted when starting the adjustment (p2507 = 2).
When the encoder is adjusted (p2507 = 3), the serial number is checked for changes and if required, the adjustment is reset (p2507 = 1).
Proceed as follows to hide serial number monitoring:
- set the following serial numbers for the corresponding Encoder Data Set: p0441= FF, p0442 = 0, p0442 = 0, p0444 = 0, p0445 = 0.
- parameterize F07414 as message type N (p2100, p2101).
See also: p0491 (Motor encoder fault response ENCODER)

Remedy: Re causes 1, 2:
Carry out an automatic adjustment using the pole position identification routine. Acknowledge fault. Initiate the pole position identification routine with p1990 = 1. Then check that the pole position identification routine is correctly executed.
SERVO:
If a pole position identification technique is selected in p1980, and if p0301 does not contain a motor type with an encoder adjusted in the factory, then p1990 is automatically activated.
or
Set the adjustment via p0431. In this case, the new serial number is automatically accepted.
or
Mechanically adjust the encoder. Accept the new serial number with p0440 = 1.
Re causes 3, 4:
Accept the new serial number with p0440 = 1.

Reaction upon F: NONE (ENCODER, OFF2)
Acknowl. upon F: IMMEDIATELY
Reaction upon N: NONE
Acknowl. upon N: NONE

F31812 (N, A) Encoder 1: Requested cycle or RX-/TX timing not supported

Message value: %1
Drive object: SERVO_S110-CAN, SERVO_S110-DP, SERVO_S110-PN
Reaction: OFF2
Acknowledge: IMMEDIATELY
Cause: A cycle requested from the Control Unit or RX/TX timing is not supported.
Fault value (r0949, interpret decimal):
0: Application cycle is not supported.
1: DRIVE-CLiQ cycle is not supported.
2: Distance between RX and TX instants in time too low.
3: TX instant in time too early.
Remedy: Carry out a POWER ON (power off/on) for all components.
Reaction upon N: NONE
Acknowl. upon N: NONE
Reaction upon A: NONE
Acknowl. upon A: NONE

F31813 Encoder 1: Hardware logic unit failed

Message value: Fault cause: %1 bin
Drive object: SERVO_S110-CAN, SERVO_S110-DP, SERVO_S110-PN
Reaction: ENCODER (IASC/DCBRAKE, NONE)
Acknowledge: PULSE INHIBIT
Cause: The DRIVE-CLiQ encoder fault word supplies fault bits that have been set.
Fault value (r0949, interpret binary):
Bit 0: ALU watchdog has responded.
Bit 1: ALU has detected a sign-of-life error.
Remedy: Replace encoder.

F31820 (N, A) Encoder 1 DRIVE-CLiQ: Telegram error

Message value: Component number: %1, fault cause: %2
Drive object: SERVO_S110-CAN, SERVO_S110-DP, SERVO_S110-PN
Reaction: ENCODER (IASC/DCBRAKE, NONE)
Acknowledge: IMMEDIATELY
Cause: A DRIVE-CLiQ communication error has occurred from the Control Unit to the encoder concerned.
Fault value (r0949, interpret hexadecimal):
yyxx hex: yy = component number, xx = fault cause
xx = 01 hex:
CRC error.
xx = 02 hex:
Telegram is shorter than specified in the length byte or in the receive list.
xx = 03 hex:
Telegram is longer than specified in the length byte or in the receive list.
xx = 04 hex:
The length of the receive telegram does not match the receive list.
xx = 05 hex:
The type of the receive telegram does not match the receive list.
xx = 06 hex:
The address of the component in the telegram and in the receive list do not match.
xx = 07 hex:
A SYNC telegram is expected - but the received telegram is not a SYNC telegram.
xx = 08 hex:
No SYNC telegram is expected - but the received telegram is one.
xx = 09 hex:
The error bit in the receive telegram is set.
xx = 10 hex:
The receive telegram is too early.
See also: p0491 (Motor encoder fault response ENCODER)
Remedy: - carry out a POWER ON.
- check the electrical cabinet design and cable routing for EMC compliance
- check the DRIVE-CLiQ wiring (interrupted cable, contacts, ...).
See also: p9916 (DRIVE-CLiQ data transfer error shutdown threshold slave)
Reaction upon N: NONE
Acknowl. upon N: NONE
Reaction upon A: NONE
Acknowl. upon A: NONE

F31835 (N, A) Encoder 1 DRIVE-CLiQ: Cyclic data transfer error

Message value: Component number: %1, fault cause: %2
Drive object: SERVO_S110-CAN, SERVO_S110-DP, SERVO_S110-PN
Reaction: ENCODER (IASC/DCBRAKE, NONE)
Acknowledge: IMMEDIATELY
Cause: A DRIVE-CLiQ communication error has occurred from the Control Unit to the encoder concerned. The nodes do not send and receive in synchronism.
Fault value (r0949, interpret hexadecimal):
yyxx hex: yy = component number, xx = fault cause
xx = 21 hex:
The cyclic telegram has not been received.
xx = 22 hex:
Timeout in the telegram receive list.
xx = 40 hex:
Timeout in the telegram send list.
See also: p0491 (Motor encoder fault response ENCODER)
Remedy: - carry out a POWER ON.
- replace the component involved.
See also: p9916 (DRIVE-CLiQ data transfer error shutdown threshold slave)
Reaction upon N: NONE
Acknowl. upon N: NONE
Reaction upon A: NONE
Acknowl. upon A: NONE

F31836 (N, A) Encoder 1 DRIVE-CLiQ: Send error for DRIVE-CLiQ data

Message value: Component number: %1, fault cause: %2
Drive object: SERVO_S110-CAN, SERVO_S110-DP, SERVO_S110-PN
Reaction: ENCODER (IASC/DCBRAKE, NONE)
Acknowledge: IMMEDIATELY
Cause: A DRIVE-CLiQ communication error has occurred from the Control Unit to the encoder involved. Data were not able to be sent.
Fault value (r0949, interpret hexadecimal):
yyxx hex: yy = component number, xx = fault cause
xx = 41 hex:
Telegram type does not match send list.
See also: p0491 (Motor encoder fault response ENCODER)
Remedy: Carry out a POWER ON.
Reaction upon N: NONE
Acknowl. upon N: NONE
Reaction upon A: NONE
Acknowl. upon A: NONE

F31837 (N, A) Encoder 1 DRIVE-CLiQ: Component fault

Message value: Component number: %1, fault cause: %2
Drive object: SERVO_S110-CAN, SERVO_S110-DP, SERVO_S110-PN
Reaction: ENCODER (IASC/DCBRAKE, NONE)
Acknowledge: IMMEDIATELY
Cause: Fault detected on the DRIVE-CLiQ component concerned. Faulty hardware cannot be excluded.
Fault value (r0949, interpret hexadecimal):
yyxx hex: yy = component number, xx = fault cause
xx = 20 hex:
Error in the telegram header.
xx = 23 hex:
Receive error: The telegram buffer memory contains an error.

xx = 42 hex:
Send error: The telegram buffer memory contains an error.
xx = 43 hex:
Send error: The telegram buffer memory contains an error.
See also: p0491 (Motor encoder fault response ENCODER)

Remedy:
- check the DRIVE-CLiQ wiring (interrupted cable, contacts, ...).
- check the electrical cabinet design and cable routing for EMC compliance
- if required, use another DRIVE-CLiQ socket (p9904).
- replace the component involved.

Reaction upon N: NONE
Acknowl. upon N: NONE
Reaction upon A: NONE
Acknowl. upon A: NONE

F31845 (N, A) Encoder 1 DRIVE-CLiQ: Cyclic data transfer error

Message value: Component number: %1, fault cause: %2
Drive object: SERVO_S110-CAN, SERVO_S110-DP, SERVO_S110-PN
Reaction: ENCODER (IASC/DCBRAKE, NONE)
Acknowledge: IMMEDIATELY
Cause: A DRIVE-CLiQ communication error has occurred from the Control Unit to the encoder involved.
Fault value (r0949, interpret hexadecimal):
yyxx hex: yy = component number, xx = fault cause
xx = 0B hex:
Synchronization error during alternating cyclic data transfer.
See also: p0491 (Motor encoder fault response ENCODER)
Remedy: Carry out a POWER ON.
See also: p9916 (DRIVE-CLiQ data transfer error shutdown threshold slave)
Reaction upon N: NONE
Acknowl. upon N: NONE
Reaction upon A: NONE
Acknowl. upon A: NONE

F31850 (N, A) Encoder 1: Encoder evaluation internal software error

Message value: %1
Drive object: SERVO_S110-CAN, SERVO_S110-DP, SERVO_S110-PN
Reaction: ENCODER (IASC/DCBRAKE, NONE)
Acknowledge: POWER ON
Cause: An internal software error has occurred in the Sensor Module of encoder 1.
Fault value (r0949, interpret decimal):
1: Background time slice is blocked.
2: Checksum over the code memory is not OK.
10000: OEM memory of the EnDat encoder contains data that cannot be interpreted.
11000 ... 11499: Descriptive data from EEPROM incorrect.
11500 ... 11899: Calibration data from EEPROM incorrect.
11900 ... 11999: Configuration data from EEPROM incorrect.
16000: DRIVE-CLiQ encoder initialization application error.
16001: DRIVE-CLiQ encoder initialization ALU error.
16002: DRIVE-CLiQ encoder HISI / SISI initialization error.
16003: DRIVE-CLiQ encoder safety initialization error.
16004: DRIVE-CLiQ encoder internal system error.
See also: p0491 (Motor encoder fault response ENCODER)

Remedy:
- replace the Sensor Module.
- if required, upgrade the firmware in the Sensor Module.
- contact the Hotline.

Reaction upon N: NONE
Acknowl. upon N: NONE
Reaction upon A: NONE
Acknowl. upon A: NONE

F31851 (N, A) Encoder 1 DRIVE-CLiQ (CU): Sign-of-life missing

Message value: Component number: %1, fault cause: %2
Drive object: SERVO_S110-CAN, SERVO_S110-DP, SERVO_S110-PN
Reaction: ENCODER (IASC/DCBRAKE, NONE)
Acknowledge: IMMEDIATELY
Cause: A DRIVE-CLiQ communication error has occurred from the Sensor Module (encoder 1) involved to the Control Unit.
The DRIVE-CLiQ component did not set the sign-of-life to the Control Unit.
Fault value (r0949, interpret hexadecimal):
yyxx hex: yy = component number, xx = fault cause
xx = 0A hex = 10 dec:
The sign-of-life bit in the receive telegram is not set.
Remedy: Upgrade the firmware of the component involved.
Reaction upon N: NONE
Acknowl. upon N: NONE
Reaction upon A: NONE
Acknowl. upon A: NONE

F31860 (N, A) Encoder 1 DRIVE-CLiQ (CU): Telegram error

Message value: Component number: %1, fault cause: %2
Drive object: SERVO_S110-CAN, SERVO_S110-DP, SERVO_S110-PN
Reaction: ENCODER (IASC/DCBRAKE, NONE)
Acknowledge: IMMEDIATELY
Cause: A DRIVE-CLiQ communication error has occurred from the Sensor Module (encoder 1) involved to the Control Unit.
Fault value (r0949, interpret hexadecimal):
yyxx hex: yy = component number, xx = fault cause
xx = 11 hex = 17 dec:
CRC error and the receive telegram is too early.
xx = 01 hex = 01 dec:
Checksum error (CRC error).
xx = 12 hex = 18 dec:
The telegram is shorter than that specified in the length byte or in the receive list and the receive telegram is too early.
xx = 02 hex = 02 dec:
Telegram is shorter than specified in the length byte or in the receive list.
xx = 13 hex = 19 dec:
The telegram is longer than that specified in the length byte or in the receive list and the receive telegram is too early.
xx = 03 hex = 03 dec:
Telegram is longer than specified in the length byte or in the receive list.
xx = 14 hex = 20 dec:
The length of the receive telegram does not match the receive list and the receive telegram is too early.
xx = 04 hex = 04 dec:
The length of the receive telegram does not match the receive list.
xx = 15 hex = 21 dec:
The type of the receive telegram does not match the receive list and the receive telegram is too early.
xx = 05 hex = 05 dec:
The type of the receive telegram does not match the receive list.
xx = 16 hex = 22 dec:
The address of the power unit in the telegram and in the receive list does not match and the receive telegram is too early.
xx = 06 hex = 06 dec:
The address of the power unit in the telegram and in the receive list do not match.

xx = 19 hex = 25 dec:
The error bit in the receive telegram is set and the receive telegram is too early.
xx = 09 hex = 09 dec:
The error bit in the receive telegram is set.
xx = 10 hex = 16 dec:
The receive telegram is too early.

Remedy: - carry out a POWER ON.
- check the electrical cabinet design and cable routing for EMC compliance
- check the DRIVE-CLiQ wiring (interrupted cable, contacts, ...).
See also: p9915 (DRIVE-CLiQ data transfer error shutdown threshold master)

Reaction upon N: NONE
Acknowl. upon N: NONE
Reaction upon A: NONE
Acknowl. upon A: NONE

F31885 (N, A) Encoder 1 DRIVE-CLiQ (CU): Cyclic data transfer error

Message value: Component number: %1, fault cause: %2
Drive object: SERVO_S110-CAN, SERVO_S110-DP, SERVO_S110-PN
Reaction: ENCODER (IASC/DCBRAKE, NONE)
Acknowledge: IMMEDIATELY
Cause: A DRIVE-CLiQ communication error has occurred from the Sensor Module (encoder 1) involved to the Control Unit.
The nodes do not send and receive in synchronism.
Fault value (r0949, interpret hexadecimal):
yyxx hex: yy = component number, xx = fault cause
xx = 1A hex = 26 dec:
Sign-of-life bit in the receive telegram not set and the receive telegram is too early.
xx = 21 hex = 33 dec:
The cyclic telegram has not been received.
xx = 22 hex = 34 dec:
Timeout in the telegram receive list.
xx = 40 hex = 64 dec:
Timeout in the telegram send list.
xx = 62 hex = 98 dec:
Error at the transition to cyclic operation.

Remedy: - check the power supply voltage of the component involved.
- carry out a POWER ON.
- replace the component involved.
See also: p9915 (DRIVE-CLiQ data transfer error shutdown threshold master)

Reaction upon N: NONE
Acknowl. upon N: NONE
Reaction upon A: NONE
Acknowl. upon A: NONE

F31886 (N, A) Encoder 1 DRIVE-CLiQ (CU): Error when sending DRIVE-CLiQ data

Message value: Component number: %1, fault cause: %2
Drive object: SERVO_S110-CAN, SERVO_S110-DP, SERVO_S110-PN
Reaction: ENCODER (IASC/DCBRAKE, NONE)
Acknowledge: IMMEDIATELY
Cause: A DRIVE-CLiQ communication error has occurred from the Sensor Module (encoder 1) involved to the Control Unit.
Data were not able to be sent.
Fault value (r0949, interpret hexadecimal):
yyxx hex: yy = component number, xx = fault cause
xx = 41 hex:
Telegram type does not match send list.

Remedy: - carry out a POWER ON.
- check whether the firmware version of the encoder (r0148) matches the firmware version of Control Unit (r0018).

Reaction upon N: NONE
Acknowl. upon N: NONE
Reaction upon A: NONE
Acknowl. upon A: NONE

F31887 (N, A) Encoder 1 DRIVE-CLiQ (CU): Component fault

Message value: Component number: %1, fault cause: %2
Drive object: SERVO_S110-CAN, SERVO_S110-DP, SERVO_S110-PN
Reaction: ENCODER (IASC/DCBRAKE, NONE)
Acknowledge: IMMEDIATELY
Cause: Fault detected on the DRIVE-CLiQ component involved (Sensor Module for encoder 1). Faulty hardware cannot be excluded.
Fault value (r0949, interpret hexadecimal):
yyxx hex: yy = component number, xx = fault cause
xx = 20 hex:
Error in the telegram header.
xx = 23 hex:
Receive error: The telegram buffer memory contains an error.
xx = 42 hex:
Send error: The telegram buffer memory contains an error.
xx = 43 hex:
Send error: The telegram buffer memory contains an error.
xx = 60 hex:
Response received too late during runtime measurement.
xx = 61 hex:
Time taken to exchange characteristic data too long.
Remedy: - check the DRIVE-CLiQ wiring (interrupted cable, contacts, ...).
- check the electrical cabinet design and cable routing for EMC compliance
- if required, use another DRIVE-CLiQ socket (p9904).
- replace the component involved.

Reaction upon N: NONE
Acknowl. upon N: NONE
Reaction upon A: NONE
Acknowl. upon A: NONE

F31895 (N, A) Encoder 1 DRIVE-CLiQ (CU): Alternating cyclic data transfer error

Message value: Component number: %1, fault cause: %2
Drive object: SERVO_S110-CAN, SERVO_S110-DP, SERVO_S110-PN
Reaction: ENCODER (IASC/DCBRAKE, NONE)
Acknowledge: IMMEDIATELY
Cause: A DRIVE-CLiQ communication error has occurred from the Sensor Module (encoder 1) involved to the Control Unit.
Fault value (r0949, interpret hexadecimal):
yyxx hex: yy = component number, xx = fault cause
xx = 0B hex:
Synchronization error during alternating cyclic data transfer.
Remedy: Carry out a POWER ON.
See also: p9915 (DRIVE-CLiQ data transfer error shutdown threshold master)

Reaction upon N: NONE
Acknowl. upon N: NONE
Reaction upon A: NONE
Acknowl. upon A: NONE

F31896 (N, A) Encoder 1 DRIVE-CLiQ (CU): Inconsistent component properties

Message value: Component number: %1
Drive object: SERVO_S110-CAN, SERVO_S110-DP, SERVO_S110-PN
Reaction: OFF2 (ENCODER, IASC/DCBRAKE, NONE, OFF1, OFF3, STOP1, STOP2)
Acknowledge: IMMEDIATELY
Cause: The properties of the DRIVE-CLiQ component (Sensor Module for encoder 1), specified by the fault value, have changed in an incompatible fashion with respect to the properties when booted. One cause can be, e.g. that a DRIVE-CLiQ cable or DRIVE-CLiQ component has been replaced.
Fault value (r0949, interpret decimal):
Component number.
Remedy: - carry out a POWER ON.
- when a component is replaced, the same component type and if possible the same firmware version should be used.
- when a cable is replaced, only cables whose length is the same as or as close as possible to the length of the original cables should be used (ensure compliance with the maximum cable length).
Reaction upon N: NONE
Acknowl. upon N: NONE
Reaction upon A: NONE
Acknowl. upon A: NONE

F31899 (N, A) Encoder 1: Unknown fault

Message value: New message: %1
Drive object: SERVO_S110-CAN, SERVO_S110-DP, SERVO_S110-PN
Reaction: ENCODER (IASC/DCBRAKE, NONE, OFF1, OFF2, OFF3, STOP1, STOP2)
Acknowledge: IMMEDIATELY (POWER ON)
Cause: A fault occurred on the Sensor Module for encoder 1 that cannot be interpreted by the Control Unit firmware.
This can occur if the firmware on this component is more recent than the firmware on the Control Unit.
Fault value (r0949, interpret decimal):
Fault number.
Note:
If required, the significance of this new fault can be read about in a more recent description of the Control Unit.
See also: p0491 (Motor encoder fault response ENCODER)
Remedy: - replace the firmware on the Sensor Module by an older firmware version (r0148).
- upgrade the firmware on the Control Unit (r0018).
Reaction upon N: NONE
Acknowl. upon N: NONE
Reaction upon A: NONE
Acknowl. upon A: NONE

A31902 (F, N) Encoder 1: SPI-BUS error occurred

Message value: %1
Drive object: SERVO_S110-CAN, SERVO_S110-DP, SERVO_S110-PN
Reaction: NONE
Acknowledge: NONE
Cause: Error when operating the internal SPI bus.
Fault value (r0949, interpret hexadecimal):
Only for internal Siemens troubleshooting.
Remedy: - replace the Sensor Module.
- if required, upgrade the firmware in the Sensor Module.
- contact the Hotline.
Reaction upon F: NONE (ENCODER, IASC/DCBRAKE, OFF1, OFF2, OFF3, STOP1, STOP2)
Acknowl. upon F: IMMEDIATELY
Reaction upon N: NONE
Acknowl. upon N: NONE

A31903 (F, N) Encoder 1: I2C-BUS error occurred

Message value: %1
Drive object: SERVO_S110-CAN, SERVO_S110-DP, SERVO_S110-PN
Reaction: NONE
Acknowledge: NONE
Cause: Error when operating the internal I2C bus.
Fault value (r0949, interpret hexadecimal):
Only for internal Siemens troubleshooting.
Remedy: - replace the Sensor Module.
- if required, upgrade the firmware in the Sensor Module.
- contact the Hotline.
Reaction upon F: NONE (ENCODER, IASC/DCBRAKE, OFF1, OFF2, OFF3, STOP1, STOP2)
Acknowl. upon F: IMMEDIATELY
Reaction upon N: NONE
Acknowl. upon N: NONE

F31905 (N, A) Encoder 1: Parameterization error

Message value: Parameter: %1, supplementary information: %2
Drive object: SERVO_S110-CAN, SERVO_S110-DP, SERVO_S110-PN
Reaction: ENCODER (IASC/DCBRAKE, NONE, OFF1, OFF2, OFF3, STOP1, STOP2)
Acknowledge: IMMEDIATELY
Cause: A parameter of encoder 1 was detected as being incorrect.
It is possible that the parameterized encoder type does not match the connected encoder.
The parameter involved can be determined as follows:
- determine the parameter number using the fault value (r0949).
- determine the parameter index (p0187).
Fault value (r0949, interpret decimal):
yyyyxxxx dec: yyyy = supplementary information, xxxx = parameter
yyyy = 0:
No information available.
yyyy = 1:
The component does not support HTL level (p0405.1 = 0) combined with track monitoring A/B <> -A/B (p0405.2 = 1).
yyyy = 2:
A code number for an identified encoder has been entered into p0400, however, no identification was carried out. Please start a new encoder identification.
yyyy = 3:
A code number for an identified encoder has been entered into p0400, however, no identification was carried out. Please select a listed encoder in p0400 with a code number < 10000.
yyyy = 4:
This component does not support SSI encoders (p0404.9 = 1) without track A/B.
yyyy = 5:
For SQW encoder, value in p4686 greater than in p0425.
yyyy = 6:
DRIVE-CLiQ encoder cannot be used with this firmware version.
yyyy = 7:
For the SQW encoder, the Xact1 correction (p0437.2) is only permitted with equidistant zero marks.
yyyy = 8:
The motor pole pair width is not supported by the linear scale being used.
See also: p0491 (Motor encoder fault response ENCODER)
Remedy: - check whether the connected encoder type matches the encoder that has been parameterized.
- correct the parameter specified by the fault value (r0949) and p0187.
- re parameter number = 314:
- check the pole pair number and measuring gear ratio. The quotient of the "pole pair number" divided by the "measuring gear ratio" must be less than or equal to 1000 ((r0313 * p0433) / p0432 <= 1000).

Reaction upon N: NONE
Acknowl. upon N: NONE
Reaction upon A: NONE
Acknowl. upon A: NONE

A31915 (F, N) Encoder 1: Configuration error

Message value: %1
Drive object: SERVO_S110-CAN, SERVO_S110-DP, SERVO_S110-PN
Reaction: NONE
Acknowledge: NONE
Cause: The configuration for encoder 1 is incorrect.
Alarm value (r2124, interpret decimal):
1: Re-parameterization between fault/alarm is not permissible.
419: When the fine resolution Gx_XIST2 is configured, the encoder identifies a maximum possible absolute position actual value (r0483) that can no longer be represented within 32 bits.
Remedy: Re alarm value = 1:
No re-parameterization between fault/alarm.
Re alarm value = 419:
Reduce the fine resolution (p0419).
Reaction upon F: NONE (ENCODER, IASC/DCBRAKE)
Acknowl. upon F: IMMEDIATELY
Reaction upon N: NONE
Acknowl. upon N: NONE

F31916 (N, A) Encoder 1: Parameterization fault

Message value: Parameter: %1, supplementary information: %2
Drive object: SERVO_S110-CAN, SERVO_S110-DP, SERVO_S110-PN
Reaction: ENCODER (IASC/DCBRAKE, NONE, OFF1, OFF2, OFF3, STOP1, STOP2)
Acknowledge: IMMEDIATELY
Cause: A parameter of encoder 1 was detected as being incorrect.
It is possible that the parameterized encoder type does not match the connected encoder.
The parameter involved can be determined as follows:
- determine the parameter number using the fault value (r0949).
- determine the parameter index (p0187).
Fault value (r0949, interpret decimal):
Parameter number.
Note:
This fault is only output for encoders where r0404.10 = 1 or r0404.11 = 1. It corresponds to A31905 with encoders where r0404.10 = 0 and r0404.11 = 0.
See also: p0491 (Motor encoder fault response ENCODER)
Remedy: - check whether the connected encoder type matches the encoder that has been parameterized.
- correct the parameter specified by the fault value (r0949) and p0187.
Reaction upon N: NONE
Acknowl. upon N: NONE
Reaction upon A: NONE
Acknowl. upon A: NONE

A31920 (F, N) Encoder 1: Temperature sensor fault

Message value: Fault cause: %1, channel number: %2
Drive object: SERVO_S110-CAN, SERVO_S110-DP, SERVO_S110-PN
Reaction: NONE
Acknowledge: NONE
Cause: When evaluating the temperature sensor, an error occurred.

Alarm value (r2124, interpret decimal):
yyxx hex: yy: channel number, xx = fault cause
xx = 1: Wire breakage or sensor not connected (KTY: R > 1630 Ohm).
xx = 2: Measured resistance too low (PTC: R < 20 Ohm, KTY: R < 50 Ohm).
xx = Additional values:
Only for internal Siemens troubleshooting.
See also: p0491 (Motor encoder fault response ENCODER)

Remedy:
- check that the encoder cable is the correct type and is correctly connected.
- check the temperature sensor selection in p0600 to p0603.
- replace the Sensor Module (hardware defect or incorrect calibration data).

Reaction upon F: NONE (ENCODER, IASC/DCBRAKE, OFF1, OFF2, OFF3, STOP1, STOP2)
Acknowl. upon F: IMMEDIATELY
Reaction upon N: NONE
Acknowl. upon N: NONE

A31940 (F, N) Sensor 1: Spindle clamping state error

Message value: %1
Drive object: SERVO_S110-CAN, SERVO_S110-DP, SERVO_S110-PN
Reaction: NONE
Acknowledge: NONE
Cause: The spindle clamping state is incorrect.
Fault value (r0949, interpret decimal):
Signal level from sensor S1.
Note:
A signal level of 500 mV corresponds to the numerical value 500 dec.

Remedy:
- Check the clamped tool.
- Check the tolerance and if required, adapt (p5040).
- Check the thresholds and if required, adapt (p5041).
- Check analog sensor S1 and connections.

Reaction upon F: NONE (ENCODER, IASC/DCBRAKE, OFF1, OFF2, OFF3, STOP1, STOP2)
Acknowl. upon F: IMMEDIATELY
Reaction upon N: NONE
Acknowl. upon N: NONE

A31999 (F, N) Encoder 1: Unknown alarm

Message value: New message: %1
Drive object: SERVO_S110-CAN, SERVO_S110-DP, SERVO_S110-PN
Reaction: NONE
Acknowledge: NONE
Cause: A alarm has occurred on the Sensor Module for encoder 1 that cannot be interpreted by the Control Unit firmware.
This can occur if the firmware on this component is more recent than the firmware on the Control Unit.
Alarm value (r2124, interpret decimal):
Alarm number.
Note:
If required, the significance of this new alarm can be read about in a more recent description of the Control Unit.
See also: p0491 (Motor encoder fault response ENCODER)

Remedy:
- replace the firmware on the Sensor Module by an older firmware version (r0148).
- upgrade the firmware on the Control Unit (r0018).

Reaction upon F: NONE (ENCODER, IASC/DCBRAKE, OFF1, OFF2, OFF3, STOP1, STOP2)
Acknowl. upon F: IMMEDIATELY (POWER ON)
Reaction upon N: NONE
Acknowl. upon N: NONE

F32100 (N, A) Encoder 2: Zero mark distance error

Message value: %1
Drive object: SERVO_S110-CAN, SERVO_S110-DP, SERVO_S110-PN
Reaction: OFF1 (IASC/DCBRAKE, NONE, OFF2, OFF3, STOP1, STOP2)
Acknowledge: PULSE INHIBIT
Cause: The measured zero mark distance does not correspond to the parameterized zero mark distance.
For distance-coded encoders, the zero mark distance is determined from zero marks detected pairs. This means that if a zero mark is missing, depending on the pair generation, this cannot result in a fault and also has no effect in the system.
The zero mark distance for the zero mark monitoring is set in p0425 (rotary encoder) or p0424 (linear encoder).
Fault value (r0949, interpret decimal):
Last measured zero mark distance in increments (4 increments = 1 encoder pulse).
The sign designates the direction of motion when detecting the zero mark distance.
Remedy: - check that the encoder cables are routed in compliance with EMC.
- check the plug connections.
- check the encoder type (encoder with equidistant zero marks).
- adapt the parameter for the distance between zero marks (p0424, p0425).
- if message output above speed threshold, reduce filter time if necessary (p0438).
- replace the encoder or encoder cable.
Reaction upon N: NONE
Acknowl. upon N: NONE
Reaction upon A: NONE
Acknowl. upon A: NONE

F32101 (N, A) Encoder 2: Zero mark failed

Message value: %1
Drive object: SERVO_S110-CAN, SERVO_S110-DP, SERVO_S110-PN
Reaction: OFF1 (IASC/DCBRAKE, NONE, OFF2, OFF3, STOP1, STOP2)
Acknowledge: PULSE INHIBIT
Cause: The 1.5 x parameterized zero mark distance was exceeded.
The zero mark distance for the zero mark monitoring is set in p0425 (rotary encoder) or p0424 (linear encoder).
Fault value (r0949, interpret decimal):
Number of increments after POWER ON or since the last zero mark that was detected (4 increments = 1 encoder pulse).
Remedy: - check that the encoder cables are routed in compliance with EMC.
- check the plug connections.
- check the encoder type (encoder with equidistant zero marks).
- adapt the parameter for the clearance between zero marks (p0425).
- if message output above speed threshold, reduce filter time if necessary (p0438).
- when p0437.1 is active, check p4686.
- replace the encoder or encoder cable.
Reaction upon N: NONE
Acknowl. upon N: NONE
Reaction upon A: NONE
Acknowl. upon A: NONE

F32103 (N, A) Encoder 2: Amplitude error track R

Message value: R track: %1
Drive object: SERVO_S110-CAN, SERVO_S110-DP, SERVO_S110-PN
Reaction: OFF1 (IASC/DCBRAKE, NONE, OFF2, OFF3)
Acknowledge: IMMEDIATELY
Cause: The amplitude of the reference track signal (track R) does not lie within the tolerance bandwidth for encoder 2.
The fault can be initiated when the unipolar voltage level is exceeded (RP/RN) or if the differential amplitude is undershot.

Fault value (r0949, interpret hexadecimal):
yyyyxxxx hex: yyyy = 0, xxxx = Signal level, track R (16 bits with sign)
The response thresholds of the unipolar signal levels of the encoder are between < 1400 mV and > 3500 mV.
The response threshold for the differential signal level of the encoder is < -1600 mV.
A signal level of 500 mV peak value corresponds to the numerical value 5333 hex = 21299 dec.
Note:
The analog value of the amplitude error is not measured at the same time with the hardware fault output by the Sensor Module.
The fault value can only be represented between -32767 ... 32767 dec (-770 ... 770 mV).
The signal level is not evaluated unless the following conditions are satisfied:
- Sensor Module properties available (r0459.31 = 1).
- Monitoring active (p0437.31 = 1).

Remedy:
- check the speed range; frequency characteristic (amplitude characteristic) of the measuring equipment might not be sufficient for the speed range
- check that the encoder cables and shielding are routed in compliance with EMC.
- check the plug connections and contacts of the encoder cable.
- check whether the zero mark is connected and the signal cables RP and RN have been connected correctly.
- replace the encoder cable.
- if the coding disk is soiled or the lighting aged, replace the encoder.

Reaction upon N: NONE
Acknowl. upon N: NONE
Reaction upon A: NONE
Acknowl. upon A: NONE

F32110 (N, A) Encoder 2: Serial communications error

Message value: Fault cause: %1 bin
Drive object: SERVO_S110-CAN, SERVO_S110-DP, SERVO_S110-PN
Reaction: OFF1 (IASC/DCBRAKE, NONE, OFF2, OFF3)
Acknowledge: PULSE INHIBIT
Cause: Serial communication protocol transfer error between the encoder and evaluation module.
Fault value (r0949, interpret binary):
Bit 0: Alarm bit in the position protocol.
Bit 1: Incorrect quiescent level on the data line.
Bit 2: Encoder does not respond (does not supply a start bit within 50 ms).
Bit 3: CRC error: The checksum in the protocol from the encoder does not match the data.
Bit 4: Encoder acknowledgement error: The encoder incorrectly understood the task (request) or cannot execute it.
Bit 5: Internal error in the serial driver: An illegal mode command was requested.
Bit 6: Timeout when cyclically reading.
Bit 8: Protocol is too long (e.g. > 64 bits).
Bit 9: Receive buffer overflow.
Bit 10: Frame error when reading twice.
Bit 11: Parity error.
Bit 12: Data line signal level error during the monoflop time.
Bit 13: Data line incorrect.

Remedy:
Re fault value, bit 0 = 1:
- Enc defect F31111 may provide additional details.

Re fault value, bit 1 = 1:
- Incorrect encoder type / replace the encoder or encoder cable.

Re fault value, bit 2 = 1:
- Incorrect encoder type / replace the encoder or encoder cable.

Re fault value, bit 3 = 1:
- EMC / connect the cable shield, replace the encoder or encoder cable.

Re fault value, bit 4 = 1:
- EMC / connect the cable shield, replace the encoder or encoder cable, replace the Sensor Module.

Re fault value, bit 5 = 1:
- EMC / connect the cable shield, replace the encoder or encoder cable, replace the Sensor Module.
Re fault value, bit 6 = 1:
- Update Sensor Module firmware.
Re fault value, bit 8 = 1:
- Check parameterization (p0429.2).
Re fault value, bit 9 = 1:
- EMC / connect the cable shield, replace the encoder or encoder cable, replace the Sensor Module.
Re fault value, bit 10 = 1:
- Check parameterization (p0429.2, p0449).
Re fault value, bit 11 = 1:
- Check parameterization (p0436).
Re fault value, bit 12 = 1:
- Check parameterization (p0429.6).
Re fault value, bit 13 = 1:
- Check data line.

Reaction upon N: NONE
Acknowl. upon N: NONE
Reaction upon A: NONE
Acknowl. upon A: NONE

F32111 (N, A) Encoder 2: Absolute encoder EnDat, internal fault/error

Message value: Fault cause: %1 bin
Drive object: SERVO_S110-CAN, SERVO_S110-DP, SERVO_S110-PN
Reaction: OFF1 (IASC/DCBRAKE, NONE, OFF2, OFF3)
Acknowledge: PULSE INHIBIT
Cause: The EnDat encoder fault word supplies fault bits that have been set.
Fault value (r0949, interpret binary):
Bit 0: Lighting system failed.
Bit 1: Signal amplitude too low.
Bit 2: Position value incorrect.
Bit 3: Encoder power supply overvoltage condition.
Bit 4: Encoder power supply undervoltage condition.
Bit 5: Encoder power supply overcurrent condition.
Bit 6: The battery must be changed.
Remedy: Re fault value, bit 0 = 1:
Encoder is defective. Replace the encoder, where the motor encoder has a direct DRIVE-CLiQ socket: Replace the motor.
Re fault value, bit 1 = 1:
Encoder is defective. Replace the encoder, where the motor encoder has a direct DRIVE-CLiQ socket: Replace the motor.
Re fault value, bit 2 = 1:
Encoder is defective. Replace the encoder, where the motor encoder has a direct DRIVE-CLiQ socket: Replace the motor.
Re fault value, bit 3 = 1:
5 V power supply voltage fault.
When using an SMC: Check the plug-in cable between the encoder and SMC or replace the SMC.
When a motor encoder with a direct DRIVE-CLiQ connection is used: Replace the motor.
Re fault value, bit 4 = 1:
5 V power supply voltage fault.
When using an SMC: Check the plug-in cable between the encoder and SMC or replace the SMC.
When using a motor with DRIVE-CLiQ: Replace the motor.
Re fault value, bit 5 = 1:
Encoder is defective. Replace the encoder, where the motor encoder has a direct DRIVE-CLiQ socket: Replace the motor.

Re fault value, bit 6 = 1:
The battery must be changed (only for encoders with battery back-up).
Reaction upon N: NONE
Acknowl. upon N: NONE
Reaction upon A: NONE
Acknowl. upon A: NONE

F32112 (N, A) Encoder 2: Error bit set in the serial protocol

Message value: %1
Drive object: SERVO_S110-CAN, SERVO_S110-DP, SERVO_S110-PN
Reaction: OFF1 (IASC/DCBRAKE, NONE, OFF2, OFF3)
Acknowledge: PULSE INHIBIT
Cause: The encoder sends a set error bit via the serial protocol.
Fault value (r0949, interpret binary):
Bit 0: Fault bit in the position protocol.
Remedy: For fault value, bit 0 = 1:
In the case of an EnDat encoder, F31111 may provide further details.
Reaction upon N: NONE
Acknowl. upon N: NONE
Reaction upon A: NONE
Acknowl. upon A: NONE

F32115 (N, A) Encoder 2: Amplitude error track A or B (A^2 + B^2)

Message value: A track: %1, B-track: %2
Drive object: SERVO_S110-CAN, SERVO_S110-DP, SERVO_S110-PN
Reaction: OFF1 (IASC/DCBRAKE, NONE, OFF2, OFF3)
Acknowledge: PULSE INHIBIT
Cause: The amplitude (root of A^2 + B^2) for encoder 2 exceeds the permissible tolerance.
Fault value (r0949, interpret hexadecimal):
yyyyxxxx hex:
yyyy = Signal level, track B (16 bits with sign).
xxxx = Signal level, track A (16 bits with sign).
The nominal signal level of the encoder must lie in the range 375 mV to 600 mV (500 mV -25/+20 %).
The response thresholds are < 230 mV (observe the frequency response of the encoder) and > 750 mV.
A signal level of 500 mV peak value corresponds to the numerical value 5333 hex = 21299 dec.
Note for Sensor Modules for resolvers (e.g. SMC10):
The nominal signal level is at 2900 mV (2.0 Vrms). The response thresholds are < 1070 mV and > 3582 mV.
A signal level of 2900 mV peak value corresponds to the numerical value 6666 hex = 26214 dec.
Note:
The analog values of the amplitude error are not measured at the same time with the hardware fault output by the Sensor Module.
Remedy: - check that the encoder cables and shielding are routed in compliance with EMC.
- check the plug connections.
- replace the encoder or encoder cable.
- check the Sensor Module (e.g. contacts).
The following applies to measuring systems without their own bearing system:
- adjust the scanning head and check the bearing system of the measuring wheel.
The following applies for measuring systems with their own bearing system:
- ensure that the encoder housing is not subject to any axial force.
Reaction upon N: NONE
Acknowl. upon N: NONE
Reaction upon A: NONE
Acknowl. upon A: NONE

F32116 (N, A) Encoder 2: Amplitude error monitoring track A + B

Message value: Amplitude: %1, Angle: %2

Drive object: SERVO_S110-CAN, SERVO_S110-DP, SERVO_S110-PN

Reaction: OFF1 (IASC/DCBRAKE, NONE, OFF2, OFF3)

Acknowledge: IMMEDIATELY

Cause: The amplitude of the rectified encoder signals A and B and the amplitude from the roots of A^2 + B^2 for encoder 2 are not within the tolerance bandwidth.
Fault value (r0949, interpret hexadecimal):
yyyyxxxx hex:
yyyy = Signal level, track B (16 bits with sign).
xxxx = Signal level, track A (16 bits with sign).
The nominal signal level of the encoder must lie in the range 375 mV to 600 mV (500 mV -25/+20 %).
The response thresholds are < 176 mV (observe the frequency response of the encoder) and > 955 mV.
A signal level of 500 mV peak value corresponds to the numerical value 5333 hex = 21299 dec.
Note:
The analog values of the amplitude error are not measured at the same time with the hardware fault output by the Sensor Module.

Remedy: - check that the encoder cables and shielding are routed in compliance with EMC.
- check the plug connections.
- replace the encoder or encoder cable.
- check the Sensor Module (e.g. contacts).

Reaction upon N: NONE

Acknowl. upon N: NONE

Reaction upon A: NONE

Acknowl. upon A: NONE

F32117 (N, A) Encoder 2: Inversion error signals A/B/R

Message value: Fault cause: %1 bin

Drive object: SERVO_S110-CAN, SERVO_S110-DP, SERVO_S110-PN

Reaction: OFF1 (IASC/DCBRAKE, NONE, OFF2, OFF3)

Acknowledge: IMMEDIATELY

Cause: For a square-wave encoder (bipolar, double ended) signals A*, B* and R* are not inverted with respect to signals A, B and R.
Fault value (r0949, interpret binary):
Bits 0 ... 15: Only for internal Siemens troubleshooting.
Bit 16: Error track A.
Bit 17: Error track B.
Bit 18: Error track R.
Note:
For SMC30 (order no.. 6SL3055-0AA00-5CA0 and 6SL3055-0AA00-5CA1 only), CUA32, and CU310, the following applies:
A square-wave encoder without track R is used and track monitoring (p0405.2 = 1) is activated.

Remedy: - Check the encoder/cable.
- Does the encoder supply signals and the associated inverted signals?
Note:
For SMC30 (order no. 6SL3055-0AA00-5CA0 and 6SL3055-0AA00-5CA1 only), the following applies:
- check the setting of p0405 (p0405.2 = 1 is only possible if the encoder is connected at X520).
For a square-wave encoder without track R, the following jumpers must be set for the connection at X520 (SMC30) or X23 (CUA32, CU310):
- pin 10 (reference signal R) <--> pin 7 (encoder power supply, ground)
- pin 11 (reference signal R inverted) <--> pin 4 (encoder power supply)

Reaction upon N: NONE

Acknowl. upon N: NONE

Reaction upon A: NONE

Acknowl. upon A: NONE

F32118 (N, A) Encoder 2: Speed difference outside the tolerance range

Message value: %1
Drive object: SERVO_S110-CAN, SERVO_S110-DP, SERVO_S110-PN
Reaction: OFF1 (IASC/DCBRAKE, NONE, OFF2, OFF3)
Acknowledge: PULSE INHIBIT
Cause: For an HTL/TTL encoder, the speed difference has exceeded the value in p0492 over several sampling cycles.
The change to the averaged speed actual value - if applicable - is monitored in the current controller sampling time.
Fault value (r0949, interpret decimal):
Only for internal Siemens troubleshooting.
See also: p0492 (Square-wave encoder maximum speed difference per sampling cycle)
Remedy: - check the tachometer feeder cable for interruptions.
- check the grounding of the tachometer shielding.
- if required, increase the maximum speed difference per sampling cycle (p0492).
Reaction upon N: NONE
Acknowl. upon N: NONE
Reaction upon A: NONE
Acknowl. upon A: NONE

F32120 (N, A) Encoder 2: Power supply voltage fault

Message value: Fault cause: %1 bin
Drive object: SERVO_S110-CAN, SERVO_S110-DP, SERVO_S110-PN
Reaction: OFF1 (IASC/DCBRAKE, NONE, OFF2, OFF3)
Acknowledge: PULSE INHIBIT
Cause: A power supply fault was detected for encoder 2.
Fault value (r0949, interpret binary):
Bit 0: Undervoltage condition on the sense line.
Bit 1: Overcurrent condition for the encoder power supply.
Bit 2: Overcurrent condition for encoder power supply on cable resolver excitation negative.
Bit 3: Overcurrent condition for encoder power supply on cable resolver excitation positive.
Note:
If the encoder cables 6FX2002-2EQ00-.... and 6FX2002-2CH00-.... are interchanged, this can result in the encoder being destroyed because the pins of the operating voltage are reversed.
Remedy: Re fault value, bit 0 = 1:
- correct encoder cable connected?
- check the plug connections of the encoder cable.
- SMC30: Check the parameterization (p0404.22).
Re fault value, bit 1 = 1:
- correct encoder cable connected?
- replace the encoder or encoder cable.
Re fault value, bit 2 = 1:
- correct encoder cable connected?
- replace the encoder or encoder cable.
Re fault value, bit 3 = 1:
- correct encoder cable connected?
- replace the encoder or encoder cable.
Reaction upon N: NONE
Acknowl. upon N: NONE
Reaction upon A: NONE
Acknowl. upon A: NONE

F32121 (N, A) Encoder 2: Coarse position error

Message value: -
Drive object: SERVO_S110-CAN, SERVO_S110-DP, SERVO_S110-PN
Reaction: OFF1 (NONE, OFF2, OFF3)
Acknowledge: PULSE INHIBIT
Cause: For the actual value sensing, an error was detected on the module.
As a result of this error, it must be assumed that the actual value sensing supplies an incorrect coarse position.
Remedy: Replace the motor with DRIVE-CLiQ or the appropriate Sensor Module.
Reaction upon N: NONE
Acknowl. upon N: NONE
Reaction upon A: NONE
Acknowl. upon A: NONE

F32122 Encoder 2: Internal power supply voltage faulty

Message value: %1
Drive object: SERVO_S110-CAN, SERVO_S110-DP, SERVO_S110-PN
Reaction: ENCODER
Acknowledge: IMMEDIATELY
Cause: Fault in internal reference voltage of ASICs for encoder 2.
Fault value (r0949, interpret decimal):
1: Reference voltage error.
2: Internal undervoltage.
3: Internal overvoltage.
Remedy: Replace the motor with DRIVE-CLiQ or the appropriate Sensor Module.

F32123 (N, A) Encoder 2: Signal level A/B unipolar outside tolerance

Message value: Fault cause: %1 bin
Drive object: SERVO_S110-CAN, SERVO_S110-DP, SERVO_S110-PN
Reaction: OFF1 (IASC/DCBRAKE, NONE, OFF2, OFF3)
Acknowledge: IMMEDIATELY
Cause: The unipolar level (AP/AN or BP/BN) for encoder 2 is outside the permissible tolerance.
Fault value (r0949, interpret binary):
Bit 0 = 1: Either AP or AN outside the tolerance.
Bit 16 = 1: Either BP or BN outside the tolerance.
The unipolar nominal signal level of the encoder must lie in the range 2500 mV +/- 500 mV.
The response thresholds are < 1700 mV and > 3300 mV.
Note:
The signal level is not evaluated unless the following conditions are satisfied:
- Sensor Module properties available (r0459.31 = 1).
- Monitoring active (p0437.31 = 1).
Remedy: - make sure that the encoder cables and shielding are installed in an EMC-compliant manner.
- check the plug connections and contacts of the encoder cable.
- check the short-circuit of a signal cable with mass or the operating voltage.
- replace the encoder cable.
Reaction upon N: NONE
Acknowl. upon N: NONE
Reaction upon A: NONE
Acknowl. upon A: NONE

F32125 (N, A) Encoder 2: Amplitude error track A or B overcontrolled

Message value: A track: %1, B-track: %2
Drive object: SERVO_S110-CAN, SERVO_S110-DP, SERVO_S110-PN
Reaction: OFF1 (IASC/DCBRAKE, NONE, OFF2, OFF3, STOP1, STOP2)
Acknowledge: PULSE INHIBIT
Cause: The amplitude of track A or B for encoder 2 exceeds the permissible tolerance band.

Fault value (r0949, interpret hexadecimal):
yyyyxxxx hex:
yyyy = Signal level, track B (16 bits with sign).
xxxx = Signal level, track A (16 bits with sign).
The nominal signal level of the encoder must lie in the range 375 mV to 600 mV (500 mV -25/+20 %).
The response threshold is > 750 mV. This fault also occurs if the A/D converter is overcontrolled.
A signal level of 500 mV peak value corresponds to the numerical value 5333 hex = 21299 dec.
Note for Sensor Modules for resolvers (e.g. SMC10):
The nominal signal level is at 2900 mV (2.0 Vrms). The response threshold is > 3582 mV.
A signal level of 2900 mV peak value corresponds to the numerical value 6666 hex = 26214 dec.
Note:
The analog values of the amplitude error are not measured at the same time with the hardware fault output by the Sensor Module.

Remedy: - check that the encoder cables and shielding are routed in compliance with EMC.
- replace the encoder or encoder cable.

Reaction upon N: NONE
Acknowl. upon N: NONE
Reaction upon A: NONE
Acknowl. upon A: NONE

F32126 (N, A) Encoder 2: Amplitude AB too high

Message value: Amplitude: %1, Angle: %2
Drive object: SERVO_S110-CAN, SERVO_S110-DP, SERVO_S110-PN
Reaction: OFF1 (IASC/DCBRAKE, NONE, OFF2, OFF3, STOP1, STOP2)
Acknowledge: PULSE INHIBIT
Cause: The amplitude (root of A^2 + B^2 or |A| + |B|) for encoder 2 exceeds the permissible tolerance.
Fault value (r0949, interpret hexadecimal):
yyyyxxxx hex:
yyyy = Angle
xxxx = Amplitude, i.e. root from A^2 + B^2 (16 bits without sign)
The nominal signal level of the encoder must lie in the range 375 mV to 600 mV (500 mV -25/+20 %).
The response threshold for (|A| + |B|) is > 1120 mV or the root of (A^2 + B^2) > 955 mV.
A signal level of 500 mV peak value corresponds to the numerical value of 299A hex = 10650 dec.
The angle 0 ... FFFF hex corresponds to 0 ... 360 degrees of the fine position. Zero degrees is at the negative zero crossover of track B.
Note:
The analog values of the amplitude error are not measured at the same time with the hardware fault output by the Sensor Module.

Remedy: - check that the encoder cables and shielding are routed in compliance with EMC.
- replace the encoder or encoder cable.

Reaction upon N: NONE
Acknowl. upon N: NONE
Reaction upon A: NONE
Acknowl. upon A: NONE

F32129 (N, A) Encoder 2: Position difference hall sensor/track C/D and A/B too large

Message value: %1
Drive object: SERVO_S110-CAN, SERVO_S110-DP, SERVO_S110-PN
Reaction: OFF1 (IASC/DCBRAKE, NONE, OFF2, OFF3)
Acknowledge: PULSE INHIBIT
Cause: The error for track C/D is greater than +/-15 ° mechanical or +/-60 ° electrical or the error for the Hall signals is greater than +/-60 ° electrical.
One period of track C/D corresponds to 360 ° mechanical.
One period of the Hall signal corresponds to 360 ° electrical.
The monitoring responds if, for example, Hall sensors are connected as equivalent for the C/D tracks with the incorrect rotational sense or supply values that are not accurate enough.

After the fine synchronization using one reference mark or 2 reference marks for distance-coded encoders, this fault is no longer initiated, but instead, Alarm A32429.
Fault value (r0949, interpret decimal):
For track C/D, the following applies:
Measured deviation as mechanical angle (16 bits with sign, 182 dec corresponds to 1 °).
For Hall signals, the following applies:
Measured deviation as electrical angle (16 bits with sign, 182 dec corresponds to 1 °).

Remedy:
- track C or D not connected.
- correct the direction of rotation of the Hall sensor possibly connected as equivalent for track C/D.
- check that the encoder cables are routed in compliance with EMC.
- check the adjustment of the Hall sensor.

Reaction upon N: NONE
Acknowl. upon N: NONE
Reaction upon A: NONE
Acknowl. upon A: NONE

F32130 (N, A) Encoder 2: Zero mark and position error from the coarse synchronization

Message value: Angular deviation, electrical: %1, angle, mechanical: %2
Drive object: SERVO_S110-CAN, SERVO_S110-DP, SERVO_S110-PN
Reaction: OFF1 (IASC/DCBRAKE, NONE, OFF2, OFF3, STOP1, STOP2)
Acknowledge: PULSE INHIBIT
Cause: After initializing the pole position using track C/D, Hall signals or pole position identification routine, the zero mark was detected outside the permissible range. For distance-coded encoders, the test is carried out after passing 2 zero marks. Fine synchronization was not carried out.
When initializing via track C/D (p0404) then it is checked whether the zero mark occurs in an angular range of +/-18 ° mechanical.
When initializing via Hall sensors (p0404) or pole position identification (p1982) it is checked whether the zero mark occurs in an angular range of +/-60 ° electrical.
Fault value (r0949, interpret hexadecimal):
yyyyxxxx hex
yyyy: Determined mechanical zero mark position (can only be used for track C/D).
xxxx: Deviation of the zero mark from the expected position as electrical angle.
Scaling: 32768 dec = 180 °

Remedy:
- check that the encoder cables are routed in compliance with EMC.
- check the plug connections.
- if the Hall sensor is used as an equivalent for track C/D, check the connection.
- Check the connection of track C or D.
- replace the encoder or encoder cable.

Reaction upon N: NONE
Acknowl. upon N: NONE
Reaction upon A: NONE
Acknowl. upon A: NONE

F32131 (N, A) Encoder 2: Deviation position incremental/absolute too large

Message value: %1
Drive object: SERVO_S110-CAN, SERVO_S110-DP, SERVO_S110-PN
Reaction: OFF1 (IASC/DCBRAKE, NONE, OFF2, OFF3, STOP1, STOP2)
Acknowledge: PULSE INHIBIT
Cause: Absolute encoder:
When cyclically reading the absolute position, an excessively high difference to the incremental position was detected. The absolute position that was read is rejected.
Limit value for the deviation:
- EnDat encoder: Is supplied from the encoder and is a minimum of 2 quadrants (e.g. EQI 1325 > 2 quadrants, EQN 1325 > 50 quadrants).
- other encoders: 15 pulses = 60 quadrants.

Incremental encoder:
When the zero pulse is passed, a deviation in the incremental position was detected.
For equidistant zero marks, the following applies:
- The first zero mark passed supplies the reference point for all subsequent checks. The other zero marks must have n times the distance referred to the first zero mark.
For distance-coded zero marks, the following applies:
- the first zero mark pair supplies the reference point for all subsequent checks. The other zero mark pairs must have the expected distance to the first zero mark pair.
Fault value (r0949, interpret decimal):
Deviation in quadrants (1 pulse = 4 quadrants).

Remedy:
- check that the encoder cables are routed in compliance with EMC.
- check the plug connections.
- replace the encoder or encoder cable.
- check whether the coding disk is dirty or there are strong ambient magnetic fields.
- adapt the parameter for the clearance between zero marks (p0425).
- if message output above speed threshold, reduce filter time if necessary (p0438).

Reaction upon N: NONE
Acknowl. upon N: NONE
Reaction upon A: NONE
Acknowl. upon A: NONE

F32135 Encoder 2: Fault when determining the position

Message value: Fault cause: %1 bin
Drive object: SERVO_S110-CAN, SERVO_S110-DP, SERVO_S110-PN
Reaction: OFF1 (IASC/DCBRAKE, NONE, OFF2, OFF3)
Acknowledge: PULSE INHIBIT
Cause: The DRIVE-CLiQ encoder supplies status information via bits in an internal status/fault word.
Some of these bits cause this fault to be triggered. Other bits are status displays. The status/fault word is displayed in the fault value.
Fault value (r0949, interpret binary):
Bit 0: F1 (safety status display)
Bit 1: F2 (safety status display)
Bit 2: Lighting (reserved)
Bit 3: Signal amplitude (reserved)
Bit 4: Position value (reserved)
Bit 5: Overvoltage (reserved)
Bit 6: Undervoltage (reserved)
Bit 7: Overcurrent (reserved)
Bit 8: Battery (reserved)
Bit 16: Lighting (--> F3x135, x = 1, 2, 3)
Bit 17: Signal amplitude (--> F3x135, x = 1, 2, 3)
Bit 18: Singleturn position 1 (--> F3x135, x = 1, 2, 3)
Bit 19: Overvoltage (--> F3x135, x = 1, 2, 3)
Bit 20: Undervoltage (--> F3x135, x = 1, 2, 3)
Bit 21: Overcurrent (--> F3x135, x = 1, 2, 3)
Bit 22: Temperature exceeded (--> F3x405, x = 1, 2, 3)
Bit 23: Singleturn position 2 (safety status display)
Bit 24: Singleturn system (--> F3x135, x = 1, 2, 3)
Bit 25: Singleturn power down (--> F3x135, x = 1, 2, 3)
Bit 26: Multiturn position 1 (--> F3x136, x = 1, 2, 3)
Bit 27: Multiturn position 2 (--> F3x136, x = 1, 2, 3)
Bit 28: Multiturn system (--> F3x136, x = 1, 2, 3)
Bit 29: Multiturn power down (--> F3x136, x = 1, 2, 3)
Bit 30: Multiturn overflow/underflow (--> F3x136, x = 1, 2, 3)
Bit 31: Multiturn battery (reserved)

Remedy: Replace DRIVE-CLiQ encoder.

F32136 Encoder 2: Error when determining multiturn information

Message value: Fault cause: %1 bin
Drive object: SERVO_S110-CAN, SERVO_S110-DP, SERVO_S110-PN
Reaction: OFF1 (IASC/DCBRAKE, NONE, OFF2, OFF3)
Acknowledge: PULSE INHIBIT
Cause: The DRIVE-CLiQ encoder supplies status information via bits in an internal status/fault word.
Some of these bits cause this fault to be triggered. Other bits are status displays. The status/fault word is displayed in the fault value.
Fault value (r0949, interpret binary):
Bit 0: F1 (safety status display)
Bit 1: F2 (safety status display)
Bit 2: Lighting (reserved)
Bit 3: Signal amplitude (reserved)
Bit 4: Position value (reserved)
Bit 5: Overvoltage (reserved)
Bit 6: Undervoltage (reserved)
Bit 7: Overcurrent (reserved)
Bit 8: Battery (reserved)
Bit 16: Lighting (--> F3x135, x = 1, 2, 3)
Bit 17: Signal amplitude (--> F3x135, x = 1, 2, 3)
Bit 18: Singleturn position 1 (--> F3x135, x = 1, 2, 3)
Bit 19: Overvoltage (--> F3x135, x = 1, 2, 3)
Bit 20: Undervoltage (--> F3x135, x = 1, 2, 3)
Bit 21: Overcurrent (--> F3x135, x = 1, 2, 3)
Bit 22: Temperature exceeded (--> F3x405, x = 1, 2, 3)
Bit 23: Singleturn position 2 (safety status display)
Bit 24: Singleturn system (--> F3x135, x = 1, 2, 3)
Bit 25: Singleturn power down (--> F3x135, x = 1, 2, 3)
Bit 26: Multiturn position 1 (--> F3x136, x = 1, 2, 3)
Bit 27: Multiturn position 2 (--> F3x136, x = 1, 2, 3)
Bit 28: Multiturn system (--> F3x136, x = 1, 2, 3)
Bit 29: Multiturn power down (--> F3x136, x = 1, 2, 3)
Bit 30: Multiturn overflow/underflow (--> F3x136, x = 1, 2, 3)
Bit 31: Multiturn battery (reserved)
Remedy: Replace DRIVE-CLiQ encoder.

F32137 Encoder 2: Internal fault when determining the position

Message value: Fault cause: %1 bin
Drive object: SERVO_S110-CAN, SERVO_S110-DP, SERVO_S110-PN
Reaction: OFF1 (IASC/DCBRAKE, NONE, OFF2, OFF3)
Acknowledge: PULSE INHIBIT
Cause: The DRIVE-CLiQ encoder fault word supplies fault bits that have been set.
Fault value (r0949, interpret binary):
Only for internal Siemens troubleshooting.
Remedy: Replace encoder.

F32138 Encoder 2: Internal error when determining multiturn information

Message value: Fault cause: %1 bin
Drive object: SERVO_S110-CAN, SERVO_S110-DP, SERVO_S110-PN
Reaction: OFF1 (IASC/DCBRAKE, NONE, OFF2, OFF3)
Acknowledge: PULSE INHIBIT
Cause: The DRIVE-CLiQ encoder fault word supplies fault bits that have been set.
Fault value (r0949, interpret binary):
Only for internal SIEMENS troubleshooting.
Remedy: Replace encoder.

F32150 (N, A) Encoder 2: Initialization error

Message value: %1
Drive object: SERVO_S110-CAN, SERVO_S110-DP, SERVO_S110-PN
Reaction: OFF1 (IASC/DCBRAKE, NONE, OFF2, OFF3, STOP1, STOP2)
Acknowledge: PULSE INHIBIT
Cause: Encoder functionality selected in p0404 is not operating correctly.
Fault value (r0949, interpret hexadecimal):
Encoder malfunction.
The bit assignment corresponds to that of p0404 (e.g. bit 5 set: Error track C/D).
Remedy: - Check that p0404 is correctly set.
- check the encoder type used (incremental/absolute) and for SMCxx, the encoder cable.
- if relevant, note additional fault messages that describe the fault in detail.
Reaction upon N: NONE
Acknowl. upon N: NONE
Reaction upon A: NONE
Acknowl. upon A: NONE

F32151 (N, A) Encoder 2: Encoder speed for initialization AB too high

Message value: %1
Drive object: SERVO_S110-CAN, SERVO_S110-DP, SERVO_S110-PN
Reaction: ENCODER (IASC/DCBRAKE, NONE, OFF1, OFF2, OFF3, STOP1, STOP2)
Acknowledge: PULSE INHIBIT
Cause: The encoder speed is too high while initializing the Sensor Module.
Remedy: Reduce the speed of the encoder accordingly during initialization.
If necessary, de-activate monitoring (p0437.29).
See also: p0437 (Sensor Module configuration extended)
Reaction upon N: NONE
Acknowl. upon N: NONE
Reaction upon A: NONE
Acknowl. upon A: NONE

F32160 (N, A) Encoder 2: Analog sensor channel A failed

Message value: %1
Drive object: SERVO_S110-CAN, SERVO_S110-DP, SERVO_S110-PN
Reaction: ENCODER (IASC/DCBRAKE, NONE)
Acknowledge: PULSE INHIBIT
Cause: The input voltage of the analog sensor is outside the permissible limits.
Fault value (r0949, interpret decimal):
1: Input voltage outside detectable measuring range.
2: Input voltage outside the measuring range set in (p4673).
3: The absolute value of the input voltage has exceeded the range limit (p4676).
Remedy: For fault value = 1:
- check the output voltage of the analog sensor.
For fault value = 2:
- check the voltage setting for each encoder period (p4673).
For fault value = 3:
- check the range limit setting and increase it if necessary (p4676).
Reaction upon N: NONE
Acknowl. upon N: NONE
Reaction upon A: NONE
Acknowl. upon A: NONE

F32161 (N, A) Encoder 2: Analog sensor channel B failed

Message value: %1
Drive object: SERVO_S110-CAN, SERVO_S110-DP, SERVO_S110-PN
Reaction: ENCODER (IASC/DCBRAKE, NONE)
Acknowledge: PULSE INHIBIT
Cause: The input voltage of the analog sensor is outside the permissible limits.
Fault value (r0949, interpret decimal):
1: Input voltage outside detectable measuring range.
2: Input voltage outside the measuring range set in (p4675).
3: The absolute value of the input voltage has exceeded the range limit (p4676).
Remedy: For fault value = 1:
- check the output voltage of the analog sensor.
For fault value = 2:
- check the voltage setting for each encoder period (p4675).
For fault value = 3:
- check the range limit setting and increase it if necessary (p4676).
Reaction upon N: NONE
Acknowl. upon N: NONE
Reaction upon A: NONE
Acknowl. upon A: NONE

F32163 (N, A) Encoder 2: Analog sensor position value exceeds limit value

Message value: %1
Drive object: SERVO_S110-CAN, SERVO_S110-DP, SERVO_S110-PN
Reaction: ENCODER (IASC/DCBRAKE, NONE)
Acknowledge: PULSE INHIBIT
Cause: The position value has exceeded the permissible range of -0.5 ... +0.5.
Fault value (r0949, interpret decimal):
1: Position value from the LVDT sensor.
2: Position value from the encoder characteristic.
Remedy: For fault value = 1:
- Check the LVDT ratio (p4678).
- check the reference signal connection at track B.
For fault value = 2:
- check the coefficients of the characteristic (p4663 ... p4666).
Reaction upon N: NONE
Acknowl. upon N: NONE
Reaction upon A: NONE
Acknowl. upon A: NONE

A32400 (F, N) Encoder 2: Alarm threshold zero mark distance error

Message value: %1
Drive object: SERVO_S110-CAN, SERVO_S110-DP, SERVO_S110-PN
Reaction: NONE
Acknowledge: NONE
Cause: The measured zero mark distance does not correspond to the parameterized zero mark distance.
For distance-coded encoders, the zero mark distance is determined from zero marks detected pairs. This means that if a zero mark is missing, depending on the pair generation, this cannot result in a fault and also has no effect in the system.
The zero mark distance for the zero mark monitoring is set in p0425 (rotary encoder) or p0424 (linear encoder).
Alarm value (r2124, interpret decimal):
Last measured zero mark distance in increments (4 increments = 1 encoder pulse).
The sign designates the direction of motion when detecting the zero mark distance.

Remedy: - check that the encoder cables are routed in compliance with EMC.
- check the plug connections.
- check the encoder type (encoder with equidistant zero marks).
- adapt the parameter for the distance between zero marks (p0424, p0425).
- replace the encoder or encoder cable.

Reaction upon F: NONE (IASC/DCBRAKE, OFF1, OFF2, OFF3, STOP1, STOP2)
Acknowl. upon F: IMMEDIATELY
Reaction upon N: NONE
Acknowl. upon N: NONE

A32401 (F, N) Encoder 2: Alarm threshold zero mark failed

Message value: %1
Drive object: SERVO_S110-CAN, SERVO_S110-DP, SERVO_S110-PN
Reaction: NONE
Acknowledge: NONE
Cause: The 1.5 x parameterized zero mark distance was exceeded.
The zero mark distance for the zero mark monitoring is set in p0425 (rotary encoder) or p0424 (linear encoder).
Alarm value (r2124, interpret decimal):
Number of increments after POWER ON or since the last zero mark that was detected (4 increments = 1 encoder pulse).
Remedy: - check that the encoder cables are routed in compliance with EMC.
- check the plug connections.
- check the encoder type (encoder with equidistant zero marks).
- adapt the parameter for the clearance between zero marks (p0425).
- replace the encoder or encoder cable.

Reaction upon F: NONE (IASC/DCBRAKE, OFF1, OFF2, OFF3, STOP1, STOP2)
Acknowl. upon F: IMMEDIATELY
Reaction upon N: NONE
Acknowl. upon N: NONE

F32405 (N, A) Encoder 2: Temperature in the encoder evaluation inadmissible

Message value: %1
Drive object: SERVO_S110-CAN, SERVO_S110-DP, SERVO_S110-PN
Reaction: ENCODER (IASC/DCBRAKE, NONE, OFF1, OFF2, OFF3, STOP1, STOP2)
Acknowledge: IMMEDIATELY (POWER ON)
Cause: The encoder evaluation for a motor with DRIVE-CLiQ has detected an inadmissible temperature.
The fault threshold is 125 ° C.
Alarm value (r2124, interpret decimal):
Measured board/module temperature in 0.1 °C.
Remedy: Reduce the ambient temperature for the DRIVE-CLiQ connection of the motor.
Reaction upon N: NONE
Acknowl. upon N: NONE
Reaction upon A: NONE
Acknowl. upon A: NONE

A32407 (F, N) Encoder 2: Function limit reached

Message value: %1
Drive object: SERVO_S110-CAN, SERVO_S110-DP, SERVO_S110-PN
Reaction: NONE
Acknowledge: NONE
Cause: The encoder has reached one of its function limits. A service is recommended.
Alarm value (r2124, interpret decimal):
1 : Incremental signals
3 : Absolute track
4 : Code connection

Remedy: Perform service. Replace the encoder if necessary.
Note:
The actual functional reserve of an encoder can be displayed via r4651.
See also: p4650 (Encoder functional reserve component number), r4651 (Encoder functional reserve)
Reaction upon F: NONE (ENCODER, IASC/DCBRAKE, OFF1, OFF2, OFF3, STOP1, STOP2)
Acknowl. upon F: IMMEDIATELY
Reaction upon N: NONE
Acknowl. upon N: NONE

A32410 (F, N) Encoder 2: Serial communications

Message value: Fault cause: %1 bin
Drive object: SERVO_S110-CAN, SERVO_S110-DP, SERVO_S110-PN
Reaction: NONE
Acknowledge: NONE
Cause: Serial communication protocol transfer error between the encoder and evaluation module.
Alarm value (r2124, interpret binary):
Bit 0: Alarm bit in the position protocol.
Bit 1: Incorrect quiescent level on the data line.
Bit 2: Encoder does not respond (does not supply a start bit within 50 ms).
Bit 3: CRC error: The checksum in the protocol from the encoder does not match the data.
Bit 4: Encoder acknowledgement error: The encoder incorrectly understood the task (request) or cannot execute it.
Bit 5: Internal error in the serial driver: An illegal mode command was requested.
Bit 6: Timeout when cyclically reading.
Bit 8: Protocol is too long (e.g. > 64 bits).
Bit 9: Receive buffer overflow.
Bit 10: Frame error when reading twice.
Bit 11: Parity error.
Bit 12: Data line signal level error during the monoflop time.
Remedy: - check that the encoder cables are routed in compliance with EMC.
- check the plug connections.
- replace encoder.
Reaction upon F: NONE (IASC/DCBRAKE, OFF1, OFF2, OFF3, STOP1, STOP2)
Acknowl. upon F: IMMEDIATELY
Reaction upon N: NONE
Acknowl. upon N: NONE

A32411 (F, N) Encoder 2: EnDat encoder signals alarms

Message value: Fault cause: %1 bin
Drive object: SERVO_S110-CAN, SERVO_S110-DP, SERVO_S110-PN
Reaction: NONE
Acknowledge: NONE
Cause: The error word of the EnDat encoder has alarm bits that have been set.
Alarm value (r2124, interpret binary):
Bit 0: Frequency exceeded (speed too high).
Bit 1: Temperature exceeded.
Bit 2: Control reserve, lighting system exceeded.
Bit 3: Battery discharged.
Bit 4: Reference point passed.
Remedy: Replace encoder.
Reaction upon F: NONE (IASC/DCBRAKE, OFF1, OFF2, OFF3, STOP1, STOP2)
Acknowl. upon F: IMMEDIATELY
Reaction upon N: NONE
Acknowl. upon N: NONE

A32412 (F, N) Encoder 2: Error bit set in the serial protocol

Message value: %1
Drive object: SERVO_S110-CAN, SERVO_S110-DP, SERVO_S110-PN
Reaction: NONE
Acknowledge: NONE
Cause: The encoder sends a set error bit via the serial protocol.
Alarm value (r2124, interpret binary):
Bit 0: Fault bit in the position protocol.
Bit 1: Alarm bit in the position protocol.
Remedy: - carry out a POWER ON (power off/on) for all components.
- check that the encoder cables are routed in compliance with EMC.
- check the plug connections.
- replace encoder.
Reaction upon F: NONE (IASC/DCBRAKE, OFF1, OFF2, OFF3, STOP1, STOP2)
Acknowl. upon F: IMMEDIATELY
Reaction upon N: NONE
Acknowl. upon N: NONE

A32414 (F, N) Encoder 2: Amplitude error track C or D (C^2 + D^2)

Message value: C track: %1, D track: %2
Drive object: SERVO_S110-CAN, SERVO_S110-DP, SERVO_S110-PN
Reaction: NONE
Acknowledge: NONE
Cause: The amplitude (C^2 + D^2) of track C or D of the encoder or from the Hall signals, is not within the tolerance bandwidth.
Alarm value (r2124, interpret hexadecimal):
yyyyxxxx hex:
yyyy = Signal level, track D (16 bits with sign).
xxxx = Signal level, track C (16 bits with sign).
The nominal signal level of the encoder must lie in the range 375 mV to 600 mV (500 mV -25/+20 %).
The response thresholds are < 230 mV (observe the frequency response of the encoder) and > 750 mV.
A signal level of 500 mV peak value corresponds to the numerical value 5333 hex = 21299 dec.
Note:
If the amplitude is not within the tolerance bandwidth, then it cannot be used to initialize the start position.
Remedy: - check that the encoder cables are routed in compliance with EMC.
- check the plug connections.
- replace the encoder or encoder cable.
- check the Sensor Module (e.g. contacts).
- check the Hall sensor box.
Reaction upon F: NONE (IASC/DCBRAKE, OFF1, OFF2, OFF3, STOP1, STOP2)
Acknowl. upon F: IMMEDIATELY
Reaction upon N: NONE
Acknowl. upon N: NONE

N32415 (F, A) Encoder 2: Amplitude alarm track A or B (A^2 + B^2)

Message value: Amplitude: %1, Angle: %2
Drive object: SERVO_S110-CAN, SERVO_S110-DP, SERVO_S110-PN
Reaction: NONE
Acknowledge: NONE
Cause: The amplitude (root of A^2 + B^2) for encoder 2 exceeds the permissible tolerance.
Alarm value (r2124, interpret hexadecimal):
yyyyxxxx hex:
yyyy = Angle
xxxx = Amplitude, i.e. root from A^2 + B^2 (16 bits without sign)
The nominal signal level of the encoder must lie in the range 375 mV to 600 mV (500 mV -25/+20 %).

The response threshold is < 300 mV (observe the frequency response of the encoder).
A signal level of 500 mV peak value corresponds to the numerical value 299A hex = 10650 dec.
The angle 0 ... FFFF hex corresponds to 0 ... 360 degrees of the fine position. Zero degrees is at the negative zero crossover of track B.
Note for Sensor Modules for resolvers (e.g. SMC10):
The nominal signal level is at 2900 mV (2.0 Vrms). The response threshold is < 1414 mV (1.0 Vrms).
A signal level of 2900 mV peak value corresponds to the numerical value 3333 hex = 13107 dec.
Note:
The analog values of the amplitude error are not measured at the same time with the hardware fault output by the Sensor Module.

Remedy:
- check the speed range, frequency characteristic (amplitude characteristic) of the measuring equipment is not sufficient for the speed range.
- check that the encoder cables and shielding are routed in compliance with EMC.
- check the plug connections.
- replace the encoder or encoder cable.
- check the Sensor Module (e.g. contacts).
- if the coding disk is soiled or the lighting aged, replace the encoder.

Reaction upon F: NONE (IASC/DCBRAKE, OFF1, OFF2, OFF3, STOP1, STOP2)
Acknowl. upon F: IMMEDIATELY
Reaction upon A: NONE
Acknowl. upon A: NONE

A32418 (F, N) Encoder 2: Speed difference per sampling rate exceeded

Message value: %1
Drive object: SERVO_S110-CAN, SERVO_S110-DP, SERVO_S110-PN
Reaction: NONE
Acknowledge: NONE
Cause: For an HTL/TTL encoder, the speed difference between two sampling cycles has exceeded the value in p0492.
The change to the averaged speed actual value - if applicable - is monitored in the current controller sampling time.
Alarm value (r2124, interpret decimal):
Only for internal Siemens troubleshooting.
See also: p0492 (Square-wave encoder maximum speed difference per sampling cycle)

Remedy:
- check the tachometer feeder cable for interruptions.
- check the grounding of the tachometer shielding.
- if required, increase the setting of p0492.

Reaction upon F: NONE (IASC/DCBRAKE, OFF1, OFF2, OFF3, STOP1, STOP2)
Acknowl. upon F: IMMEDIATELY
Reaction upon N: NONE
Acknowl. upon N: NONE

A32419 (F, N) Encoder 2: Track A or B outside tolerance

Message value: %1
Drive object: SERVO_S110-CAN, SERVO_S110-DP, SERVO_S110-PN
Reaction: NONE
Acknowledge: NONE
Cause: The amplitude/phase/offset correction for track A or B is at the limit.
Amplitude error correction: Amplitude B / Amplitude A = 0.78 ... 1.27
Phase: <84 degrees or >96 degrees
SMC20: Offset correction: +/-140 mV
SMC10: Offset correction: +/-650 mV
Alarm value (r2124, interpret hexadecimal):
xxxx1: Minimum of the offset correction, track B
xxxx2: Maximum of the offset correction, track B
xxx1x: Minimum of the offset correction, track A
xxx2x: Maximum of the offset correction, track A
xx1xx: Minimum of the amplitude correction, track B/A

xx2xx: Maximum of the amplitude correction, track B/A
x1xxx: Minimum of the phase error correction
x2xxx: Maximum of the phase error correction
1xxxx: Minimum of the cubic correction
2xxxx: Maximum of the cubic correction

Remedy:
- check mechanical mounting tolerances for encoders without their own bearings (e.g. toothed-wheel encoders).
- check the plug connections (also the transition resistance).
- check the encoder signals.
- replace the encoder or encoder cable.

Reaction upon F: NONE (IASC/DCBRAKE, OFF1, OFF2, OFF3, STOP1, STOP2)
Acknowl. upon F: IMMEDIATELY
Reaction upon N: NONE
Acknowl. upon N: NONE

A32421 (F, N) Encoder 2: Coarse position error

Message value: %1
Drive object: SERVO_S110-CAN, SERVO_S110-DP, SERVO_S110-PN
Reaction: NONE
Acknowledge: NONE
Cause: For the actual value sensing, an error was detected. As a result of this error, it must be assumed that the actual value sensing supplies an incorrect coarse position.

Alarm value (r2124, interpret decimal):

3: The absolute position of the serial protocol and track A/B differ by half an encoder pulse. The absolute position must have its zero position in the quadrants in which both tracks are negative. In the case of a fault, the position can be incorrect by one encoder pulse.

Remedy: Re alarm value = 3:
- For a standard encoder with cable, contact the manufacturer where relevant.
- correct the assignment of the tracks to the position value that is serially transferred. To do this, the two tracks must be connected, inverted, at the Sensor Module (interchange A with A* and B with B*) or, for a programmable encoder, check the zero offset of the position.

Reaction upon F: NONE (IASC/DCBRAKE, OFF1, OFF2, OFF3, STOP1, STOP2)
Acknowl. upon F: IMMEDIATELY
Reaction upon N: NONE
Acknowl. upon N: NONE

A32422 (F, N) Encoder 2: Pulses per revolution square-wave encoder outside tolerance bandwidth

Message value: %1
Drive object: SERVO_S110-CAN, SERVO_S110-DP, SERVO_S110-PN
Reaction: NONE
Acknowledge: NONE
Cause: The measured zero mark distance does not correspond to the parameterized zero mark distance.

This alarm is triggered with active square-wave encoder PPR correction and re-parameterized fault 31131 if the accumulator contains larger values than p4683 or p4684.

The zero mark distance for zero mark monitoring is set in p0425 (rotary encoder).

Alarm value (r2124, interpret decimal):

accumulated differential pulses in encoder pulses.

Remedy:
- check that the encoder cables are routed in compliance with EMC.
- check the plug connections.
- check the encoder type (encoder with equidistant zero marks).
- adapt the parameter for the distance between zero marks (p0424, p0425).
- replace the encoder or encoder cable.

Reaction upon F: NONE (IASC/DCBRAKE, OFF1, OFF2, OFF3, STOP1, STOP2)
Acknowl. upon F: IMMEDIATELY
Reaction upon N: NONE
Acknowl. upon N: NONE

A32429 (F, N) Encoder 2: Position difference hall sensor/track C/D and A/B too large

Message value: %1
Drive object: SERVO_S110-CAN, SERVO_S110-DP, SERVO_S110-PN
Reaction: NONE
Acknowledge: NONE
Cause: The error for track C/D is greater than +/-15 ° mechanical or +/-60 ° electrical or the error for the Hall signals is greater than +/-60 ° electrical.
One period of track C/D corresponds to 360 ° mechanical.
One period of the Hall signal corresponds to 360 ° electrical.
The monitoring responds if, for example, Hall sensors are connected as equivalent for the C/D tracks with the incorrect rotational sense or supply values that are not accurate enough.
Alarm value (r2124, interpret decimal):
For track C/D, the following applies:
Measured deviation as mechanical angle (16 bits with sign, 182 dec corresponds to 1 °).
For Hall signals, the following applies:
Measured deviation as electrical angle (16 bits with sign, 182 dec corresponds to 1 °).
Remedy: - track C or D not connected.
- correct the direction of rotation of the Hall sensor possibly connected as equivalent for track C/D.
- check that the encoder cables are routed in compliance with EMC.
- check the adjustment of the Hall sensor.
Reaction upon F: NONE (IASC/DCBRAKE, OFF1, OFF2, OFF3, STOP1, STOP2)
Acknowl. upon F: IMMEDIATELY
Reaction upon N: NONE
Acknowl. upon N: NONE

A32431 (F, N) Encoder 2: Deviation position incremental/absolute too large

Message value: %1
Drive object: SERVO_S110-CAN, SERVO_S110-DP, SERVO_S110-PN
Reaction: NONE
Acknowledge: NONE
Cause: When the zero pulse is passed, a deviation in the incremental position was detected.
For equidistant zero marks, the following applies:
- The first zero mark passed supplies the reference point for all subsequent checks. The other zero marks must have n times the distance referred to the first zero mark.
For distance-coded zero marks, the following applies:
- the first zero mark pair supplies the reference point for all subsequent checks. The other zero mark pairs must have the expected distance to the first zero mark pair.
Alarm value (r2124, interpret decimal):
Deviation in quadrants (1 pulse = 4 quadrants).
Remedy: - check that the encoder cables are routed in compliance with EMC.
- check the plug connections.
- replace the encoder or encoder cable.
- Clean coding disk or remove strong magnetic fields.
Reaction upon F: NONE (IASC/DCBRAKE, OFF1, OFF2, OFF3, STOP1, STOP2)
Acknowl. upon F: IMMEDIATELY
Reaction upon N: NONE
Acknowl. upon N: NONE

A32432 (F, N) Encoder 2: Rotor position adaptation corrects deviation

Message value: %1
Drive object: SERVO_S110-CAN, SERVO_S110-DP, SERVO_S110-PN
Reaction: NONE
Acknowledge: NONE
Cause: For track A/B, pulses have been lost or too many have been counted. These pulses are presently being corrected.

Alarm value (r2124, interpret decimal):
Last measured deviation of zero mark in increments (4 increments = 1 encoder pulse).
The sign designates the direction of motion when detecting the zero mark distance.

Remedy:
- check that the encoder cables are routed in compliance with EMC.
- check the plug connections.
- replace the encoder or encoder cable.
- check encoder limit frequency.
- adapt the parameter for the distance between zero marks (p0424, p0425).

Reaction upon F: NONE (ENCODER, IASC/DCBRAKE, OFF1, OFF2, OFF3, STOP1, STOP2)
Acknowl. upon F: IMMEDIATELY
Reaction upon N: NONE
Acknowl. upon N: NONE

A32442 (F, N) Encoder 2: Battery voltage pre-alarm

Message value: -
Drive object: SERVO_S110-CAN, SERVO_S110-DP, SERVO_S110-PN
Reaction: NONE
Acknowledge: NONE
Cause: When switched-off, the encoder uses a battery to back up the multiturn information. The battery voltage is no longer sufficient to check the multiturn information.
Remedy: Replace battery.
Reaction upon F: NONE (ENCODER, IASC/DCBRAKE, OFF1, OFF2, OFF3, STOP1, STOP2)
Acknowl. upon F: IMMEDIATELY
Reaction upon N: NONE
Acknowl. upon N: NONE

A32443 (F, N) Encoder 2: Unipolar CD signal level outside specification

Message value: Fault cause: %1 bin
Drive object: SERVO_S110-CAN, SERVO_S110-DP, SERVO_S110-PN
Reaction: NONE
Acknowledge: NONE
Cause: The unipolar level (CP/CN or DP/DN) for encoder 2 is outside the permissible tolerance.
Alarm value (r2124, interpret binary):
Bit 0 = 1: Either CP or CN outside the tolerance.
Bit 16 = 1: Either DP or DN outside the tolerance.
The unipolar nominal signal level of the encoder must lie in the range 2500 mV +/- 500 mV.
The response thresholds are < 1700 mV and > 3300 mV.
Note:
The signal level is not evaluated unless the following conditions are satisfied:
- Sensor Module properties available (r0459.31 = 1).
- Monitoring active (p0437.31 = 1).

Remedy:
- check that the encoder cables and shielding are routed in compliance with EMC.
- check the plug connections and contacts of the encoder cable.
- are the C/D tracks connected correctly (have the signal lines CP and CN or DP and DN been interchanged)?
- replace the encoder cable.

Reaction upon F: NONE (IASC/DCBRAKE, OFF1, OFF2, OFF3, STOP1, STOP2)
Acknowl. upon F: IMMEDIATELY
Reaction upon N: NONE
Acknowl. upon N: NONE

A32460 (N) Encoder 2: Analog sensor channel A failed

Message value: %1
Drive object: SERVO_S110-CAN, SERVO_S110-DP, SERVO_S110-PN
Reaction: NONE
Acknowledge: NONE
Cause: The input voltage of the analog sensor is outside the permissible limits.

Alarm value (r2124, interpret decimal):
1: Input voltage outside detectable measuring range.
2: Input voltage outside measuring range set in p4673.
3: The absolute value of the input voltage has exceeded the range limit (p4676).

Remedy: Re alarm value = 1:
- check the output voltage of the analog sensor.
Re alarm value = 2:
- check the voltage setting for each encoder period (p4673).
Re alarm value = 3:
- check the range limit setting and increase it if necessary (p4676).

Reaction upon N: NONE
Acknowl. upon N: NONE

A32461 (N) Encoder 2: Analog sensor channel B failed

Message value: %1
Drive object: SERVO_S110-CAN, SERVO_S110-DP, SERVO_S110-PN
Reaction: NONE
Acknowledge: NONE
Cause: The input voltage of the analog sensor is outside the permissible limits.
Alarm value (r2124, interpret decimal):
1: Input voltage outside detectable measuring range.
2: Input voltage outside the measuring range set in (p4675).
3: The absolute value of the input voltage has exceeded the range limit (p4676).

Remedy: Re alarm value = 1:
- check the output voltage of the analog sensor.
Re alarm value = 2:
- check the voltage setting for each encoder period (p4675).
Re alarm value = 3:
- check the range limit setting and increase it if necessary (p4676).

Reaction upon N: NONE
Acknowl. upon N: NONE

A32462 (N) Encoder 2: Analog sensor no channel active

Message value: %1
Drive object: SERVO_S110-CAN, SERVO_S110-DP, SERVO_S110-PN
Reaction: NONE
Acknowledge: NONE
Cause: Channel A and B are not activated for the analog sensor.
Remedy: - activate channel A and/or channel B (p4670).
- check the encoder configuration (p0404.17).
See also: p4670 (Analog sensor configuration)

Reaction upon N: NONE
Acknowl. upon N: NONE

A32463 (N) Encoder 2: Analog sensor position value exceeds limit value

Message value: %1
Drive object: SERVO_S110-CAN, SERVO_S110-DP, SERVO_S110-PN
Reaction: NONE
Acknowledge: NONE
Cause: The position value has exceeded the permissible range of -0.5 ... +0.5.
Alarm value (r2124, interpret decimal):
1: Position value from the LVDT sensor.
2: Position value from the encoder characteristic.

Remedy: Re alarm value = 1:
- Check the LVDT ratio (p4678).
- check the reference signal connection at track B.

Re alarm value = 2:
- check the coefficients of the characteristic (p4663 ... p4666).

Reaction upon N: NONE
Acknowl. upon N: NONE

A32470 (F, N) Encoder 2: Soiling detected

Message value: -
Drive object: SERVO_S110-CAN, SERVO_S110-DP, SERVO_S110-PN
Reaction: NONE
Acknowledge: NONE
Cause: In the case of the alternative encoder system interface on the Sensor Module Cabinet 30 (SMC30), encoder soiling is signaled via a 0 signal at terminal X521.7.
Remedy:
- check the plug connections.
- replace the encoder or encoder cable.

Reaction upon F: NONE (IASC/DCBRAKE, OFF1, OFF2, OFF3, STOP1, STOP2)
Acknowl. upon F: IMMEDIATELY
Reaction upon N: NONE
Acknowl. upon N: NONE

F32500 (N, A) Encoder 2: Position tracking traversing range exceeded

Message value: -
Drive object: SERVO_S110-CAN, SERVO_S110-DP, SERVO_S110-PN
Reaction: OFF1 (NONE, OFF2, OFF3)
Acknowledge: IMMEDIATELY
Cause: For a configured linear axis without modulo correction, the drive/encoder has exceeded the maximum possible traversing range. The value should be read in p0412 and interpreted as the number of motor revolutions.

For p0411.0 = 1, the maximum traversing range for the configured linear axis is defined to be 64x (+/- 32x) of p0421.

For p0411.3 = 1, the maximum traversing range for the configured linear axis is pre-set (default value) to the highest possible value and is +/-p0412/2 (rounded off to complete revolutions). The highest possible value depends on the pulse number (p0408) and the fine resolution (p0419).

Remedy: The fault should be resolved as follows:
- select encoder commissioning (p0010 = 4).
- reset the position tracking as follows (p0411.2 = 1).
- de-select encoder commissioning (p0010 = 0).

The fault should then be acknowledged and the absolute encoder adjusted.

Reaction upon N: NONE
Acknowl. upon N: NONE
Reaction upon A: NONE
Acknowl. upon A: NONE

F32501 (N, A) Encoder 2: Position tracking encoder position outside tolerance window

Message value: %1
Drive object: SERVO_S110-CAN, SERVO_S110-DP, SERVO_S110-PN
Reaction: OFF1 (NONE, OFF2, OFF3)
Acknowledge: IMMEDIATELY
Cause: When powered down, the drive/encoder was moved through a distance greater than was parameterized in the tolerance window. It is possible that there is no longer any reference between the mechanical system and encoder.

Fault value (r0949, interpret decimal):

Deviation (difference) to the last encoder position in increments of the absolute value.

The sign designates the traversing direction.

Note:

The deviation (difference) found is also displayed in r0477.

Remedy: Reset the position tracking as follows:
- select encoder commissioning (p0010 = 4).
- reset the position tracking as follows (p0411.2 = 1).
- de-select encoder commissioning (p0010 = 0).
The fault should then be acknowledged and, if necessary, the absolute encoder adjusted (p2507).
See also: p0010 (Drive commissioning parameter filter), p2507 (LR absolute encoder adjustment status)
Reaction upon N: NONE
Acknowl. upon N: NONE
Reaction upon A: NONE
Acknowl. upon A: NONE

A32700 Encoder 2: Effectivity test does not supply the expected value

Message value: Fault cause: %1 bin
Drive object: SERVO_S110-CAN, SERVO_S110-DP, SERVO_S110-PN
Reaction: NONE
Acknowledge: NONE
Cause: The DRIVE-CLiQ encoder fault word supplies fault bits that have been set.
Fault value (r0949, interpret binary):
Bit x = 1: Effectivity test x unsuccessful.
Remedy: Replace encoder.

N32800 (F) Encoder 2: Group signal

Message value: -
Drive object: SERVO_S110-CAN, SERVO_S110-DP, SERVO_S110-PN
Reaction: OFF1 (IASC/DCBRAKE, NONE, OFF2, OFF3)
Acknowledge: NONE
Cause: The motor encoder has detected at least one fault.
Remedy: Evaluates other actual messages.
Reaction upon F: OFF1 (IASC/DCBRAKE, NONE, OFF2, OFF3)
Acknowl. upon F: IMMEDIATELY

F32801 (N, A) Encoder 2 DRIVE-CLiQ: Sign-of-life missing

Message value: Component number: %1, fault cause: %2
Drive object: SERVO_S110-CAN, SERVO_S110-DP, SERVO_S110-PN
Reaction: OFF1 (IASC/DCBRAKE, NONE, OFF2, OFF3)
Acknowledge: IMMEDIATELY
Cause: A DRIVE-CLiQ communication error has occurred from the Control Unit to the encoder involved.
Fault value (r0949, interpret hexadecimal):
yyxx hex: yy = component number, xx = fault cause
xx = 0A hex:
The sign-of-life bit in the receive telegram is not set.
Remedy: - check the electrical cabinet design and cable routing for EMC compliance
- replace the component involved.
See also: p9916 (DRIVE-CLiQ data transfer error shutdown threshold slave)
Reaction upon N: NONE
Acknowl. upon N: NONE
Reaction upon A: NONE
Acknowl. upon A: NONE

F32802 (N, A) Encoder 2: Time slice overflow

Message value: %1
Drive object: SERVO_S110-CAN, SERVO_S110-DP, SERVO_S110-PN
Reaction: OFF1 (IASC/DCBRAKE, NONE, OFF2, OFF3)
Acknowledge: IMMEDIATELY
Cause: A time slice overflow has occurred in encoder 2.

Fault value (r0949, interpret decimal):
9: Time slice overflow of the fast (current controller clock cycle) time slice.
10: Time slice overflow of the average time slice.
12: Time slice overflow of the slow time slice.
999: Timeout when waiting for SYNO (e.g. unexpected return to non-cyclic operation).

Remedy: Reduce the current controller frequency.
Reaction upon N: NONE
Acknowl. upon N: NONE
Reaction upon A: NONE
Acknowl. upon A: NONE

F32804 (N, A) Encoder 2: Checksum error

Message value: %1
Drive object: SERVO_S110-CAN, SERVO_S110-DP, SERVO_S110-PN
Reaction: OFF1 (IASC/DCBRAKE, NONE, OFF2, OFF3)
Acknowledge: IMMEDIATELY
Cause: A checksum error has occurred when reading-out the program memory on the Sensor Module.
Fault value (r0949, interpret hexadecimal):
yyyyxxxx hex
yyyy: Memory area involved.
xxxx: Difference between the checksum at POWER ON and the actual checksum.
Remedy: - check whether the permissible ambient temperature for the component is maintained.
- replace the Sensor Module.
Reaction upon N: NONE
Acknowl. upon N: NONE
Reaction upon A: NONE
Acknowl. upon A: NONE

F32805 (N, A) Encoder 2: EPROM checksum error

Message value: %1
Drive object: SERVO_S110-CAN, SERVO_S110-DP, SERVO_S110-PN
Reaction: OFF1 (IASC/DCBRAKE, NONE, OFF2, OFF3)
Acknowledge: IMMEDIATELY
Cause: Internal parameter data is corrupted.
Fault value (r0949, interpret hexadecimal):
01: EEPROM access error.
02: Too many blocks in the EEPROM.
Remedy: Replace the module.
Reaction upon N: NONE
Acknowl. upon N: NONE
Reaction upon A: NONE
Acknowl. upon A: NONE

F32806 (N, A) Encoder 2: Initialization error

Message value: %1
Drive object: SERVO_S110-CAN, SERVO_S110-DP, SERVO_S110-PN
Reaction: OFF1 (IASC/DCBRAKE, NONE, OFF2, OFF3)
Acknowledge: PULSE INHIBIT
Cause: The encoder was not successfully initialized.
Fault value (r0949, interpret hexadecimal):
Bit 0, 1: Encoder initialization with the motor rotating has failed (deviation involving coarse and fine position in encoder pulses/4).
Bit 2: Mid-voltage matching for track A unsuccessful.
Bit 3: Mid-voltage matching for track B unsuccessful.
Bit 4: Mid-voltage matching for acceleration input unsuccessful.
Bit 5: Mid-voltage matching for track safety A unsuccessful.

Bit 6: Mid-voltage matching for track safety B unsuccessful.
Bit 7: Mid-voltage matching for track C unsuccessful.
Bit 8: Mid-voltage matching for track D unsuccessful.
Bit 9: Mid-voltage matching for track R unsuccessful.
Bit 10: The difference in mid-voltages between A and B is too great (> 0.5 V)
Bit 11: The difference in mid-voltages between C and D is too great (> 0.5 V)
Bit 12: The difference in mid-voltages between safety A and safety B is too great (> 0.5 V)
Bit 13: The difference in mid-voltages between A and safety B is too great (> 0.5 V)
Bit 14: The difference in mid-voltages between B and safety A is too great (> 0.5 V)
Bit 15: The standard deviation of the calculated mid-voltages is too great (> 0.3 V)
Bit 16: Internal fault - fault reading a register (CAFE)
Bit 17: Internal fault - fault writing a register (CAFE)
Bit 18: Internal fault: No mid-voltage matching available
Bit 19: Internal error - ADC access error.
Bit 20: Internal error - no zero crossover found.
Note:
Bit 0, 1: Up to 6SL3055-0AA00-5*A0
Bits 2 ... 20: 6SL3055-0AA00-5*A1 and higher

Remedy: Acknowledge fault.
If the fault cannot be acknowledged:
Bits 2 ... 9: Check encoder power supply.
Bits 2 ... 14: Check the corresponding cable.
Bit 15 with no other bits: Check track R, check settings in p0404.

Reaction upon N: NONE
Acknowl. upon N: NONE
Reaction upon A: NONE
Acknowl. upon A: NONE

F32811 (N, A) Encoder 2: Encoder serial number changed

Message value: -
Drive object: SERVO_S110-CAN, SERVO_S110-DP, SERVO_S110-PN
Reaction: OFF1 (NONE, OFF2, OFF3)
Acknowledge: IMMEDIATELY
Cause: The encoder serial number has changed. The change is only checked for encoders with serial number (e.g. EnDat encoders).
- The encoder was replaced.
Note:
With closed-loop position control, the serial number is accepted when starting the adjustment (p2507 = 2).
When the encoder is adjusted (p2507 = 3), the serial number is checked for changes and if required, the adjustment is reset (p2507 = 1).
Proceed as follows to hide serial number monitoring:
- set the following serial numbers for the corresponding Encoder Data Set: p0441= FF, p0442 = 0, p0442 = 0, p0444 = 0, p0445 = 0.

Remedy: Mechanically adjust the encoder. Accept the new serial number with p0440 = 1.
Reaction upon N: NONE
Acknowl. upon N: NONE
Reaction upon A: NONE
Acknowl. upon A: NONE

F32812 (N, A) Encoder 2: Requested cycle or RX-/TX timing not supported

Message value: %1
Drive object: SERVO_S110-CAN, SERVO_S110-DP, SERVO_S110-PN
Reaction: OFF2
Acknowledge: IMMEDIATELY
Cause: A cycle requested from the Control Unit or RX/TX timing is not supported.

Fault value (r0949, interpret decimal):
0: Application cycle is not supported.
1: DRIVE-CLiQ cycle is not supported.
2: Distance between RX and TX instants in time too low.
3: TX instant in time too early.

Remedy: Carry out a POWER ON (power off/on) for all components.
Reaction upon N: NONE
Acknowl. upon N: NONE
Reaction upon A: NONE
Acknowl. upon A: NONE

F32813 Encoder 2: Hardware logic unit failed

Message value: Fault cause: %1 bin
Drive object: SERVO_S110-CAN, SERVO_S110-DP, SERVO_S110-PN
Reaction: OFF1 (IASC/DCBRAKE, NONE, OFF2, OFF3)
Acknowledge: PULSE INHIBIT
Cause: The DRIVE-CLiQ encoder fault word supplies fault bits that have been set.
Fault value (r0949, interpret binary):
Bit 0: ALU watchdog has responded.
Bit 1: ALU has detected a sign-of-life error.
Remedy: Replace encoder.

F32820 (N, A) Encoder 2 DRIVE-CLiQ: Telegram error

Message value: Component number: %1, fault cause: %2
Drive object: SERVO_S110-CAN, SERVO_S110-DP, SERVO_S110-PN
Reaction: OFF1 (IASC/DCBRAKE, NONE, OFF2, OFF3)
Acknowledge: IMMEDIATELY
Cause: A DRIVE-CLiQ communication error has occurred from the Control Unit to the encoder concerned.
Fault value (r0949, interpret hexadecimal):
yyxx hex: yy = component number, xx = fault cause
xx = 01 hex:
CRC error.
xx = 02 hex:
Telegram is shorter than specified in the length byte or in the receive list.
xx = 03 hex:
Telegram is longer than specified in the length byte or in the receive list.
xx = 04 hex:
The length of the receive telegram does not match the receive list.
xx = 05 hex:
The type of the receive telegram does not match the receive list.
xx = 06 hex:
The address of the component in the telegram and in the receive list do not match.
xx = 07 hex:
A SYNC telegram is expected - but the received telegram is not a SYNC telegram.
xx = 08 hex:
No SYNC telegram is expected - but the received telegram is one.
xx = 09 hex:
The error bit in the receive telegram is set.
xx = 10 hex:
The receive telegram is too early.
Remedy: - carry out a POWER ON.
- check the electrical cabinet design and cable routing for EMC compliance
- check the DRIVE-CLiQ wiring (interrupted cable, contacts, ...).
See also: p9916 (DRIVE-CLiQ data transfer error shutdown threshold slave)

Reaction upon N: NONE
Acknowl. upon N: NONE
Reaction upon A: NONE
Acknowl. upon A: NONE

F32835 (N, A) Encoder 2 DRIVE-CLiQ: Cyclic data transfer error

Message value: Component number: %1, fault cause: %2
Drive object: SERVO_S110-CAN, SERVO_S110-DP, SERVO_S110-PN
Reaction: OFF1 (IASC/DCBRAKE, NONE, OFF2, OFF3)
Acknowledge: IMMEDIATELY
Cause: A DRIVE-CLiQ communication error has occurred from the Control Unit to the encoder concerned. The nodes do not send and receive in synchronism.
Fault value (r0949, interpret hexadecimal):
yyxx hex: yy = component number, xx = fault cause
xx = 21 hex:
The cyclic telegram has not been received.
xx = 22 hex:
Timeout in the telegram receive list.
xx = 40 hex:
Timeout in the telegram send list.
Remedy: - carry out a POWER ON.
- replace the component involved.
See also: p9916 (DRIVE-CLiQ data transfer error shutdown threshold slave)
Reaction upon N: NONE
Acknowl. upon N: NONE
Reaction upon A: NONE
Acknowl. upon A: NONE

F32836 (N, A) Encoder 2 DRIVE-CLiQ: Send error for DRIVE-CLiQ data

Message value: Component number: %1, fault cause: %2
Drive object: SERVO_S110-CAN, SERVO_S110-DP, SERVO_S110-PN
Reaction: OFF1 (IASC/DCBRAKE, NONE, OFF2, OFF3)
Acknowledge: IMMEDIATELY
Cause: A DRIVE-CLiQ communication error has occurred from the Control Unit to the encoder involved. Data were not able to be sent.
Fault value (r0949, interpret hexadecimal):
yyxx hex: yy = component number, xx = fault cause
xx = 41 hex:
Telegram type does not match send list.
Remedy: Carry out a POWER ON.
Reaction upon N: NONE
Acknowl. upon N: NONE
Reaction upon A: NONE
Acknowl. upon A: NONE

F32837 (N, A) Encoder 2 DRIVE-CLiQ: Component fault

Message value: Component number: %1, fault cause: %2
Drive object: SERVO_S110-CAN, SERVO_S110-DP, SERVO_S110-PN
Reaction: OFF1 (IASC/DCBRAKE, NONE, OFF2, OFF3)
Acknowledge: IMMEDIATELY
Cause: Fault detected on the DRIVE-CLiQ component concerned. Faulty hardware cannot be excluded.
Fault value (r0949, interpret hexadecimal):
yyxx hex: yy = component number, xx = fault cause
xx = 20 hex:
Error in the telegram header.

xx = 23 hex:
Receive error: The telegram buffer memory contains an error.
xx = 42 hex:
Send error: The telegram buffer memory contains an error.
xx = 43 hex:
Send error: The telegram buffer memory contains an error.

Remedy:
- check the DRIVE-CLiQ wiring (interrupted cable, contacts, ...).
- check the electrical cabinet design and cable routing for EMC compliance
- if required, use another DRIVE-CLiQ socket (p9904).
- replace the component involved.

Reaction upon N: NONE
Acknowl. upon N: NONE
Reaction upon A: NONE
Acknowl. upon A: NONE

F32845 (N, A) Encoder 2 DRIVE-CLiQ: Cyclic data transfer error

Message value: Component number: %1, fault cause: %2
Drive object: SERVO_S110-CAN, SERVO_S110-DP, SERVO_S110-PN
Reaction: OFF1 (IASC/DCBRAKE, NONE, OFF2, OFF3)
Acknowledge: IMMEDIATELY
Cause: A DRIVE-CLiQ communication error has occurred from the Control Unit to the encoder involved.
Fault value (r0949, interpret hexadecimal):
yyxx hex: yy = component number, xx = fault cause
xx = 0B hex:
Synchronization error during alternating cyclic data transfer.
Remedy: Carry out a POWER ON.
See also: p9916 (DRIVE-CLiQ data transfer error shutdown threshold slave)
Reaction upon N: NONE
Acknowl. upon N: NONE
Reaction upon A: NONE
Acknowl. upon A: NONE

F32850 (N, A) Encoder 2: Encoder evaluation internal software error

Message value: %1
Drive object: SERVO_S110-CAN, SERVO_S110-DP, SERVO_S110-PN
Reaction: OFF1 (IASC/DCBRAKE, NONE, OFF2, OFF3)
Acknowledge: POWER ON
Cause: An internal software error has occurred in the Sensor Module of encoder 2.
Fault value (r0949, interpret decimal):
1: Background time slice is blocked.
2: Checksum over the code memory is not OK.
10000: OEM memory of the EnDat encoder contains data that cannot be interpreted.
11000 ... 11499: Descriptive data from EEPROM incorrect.
11500 ... 11899: Calibration data from EEPROM incorrect.
11900 ... 11999: Configuration data from EEPROM incorrect.
16000: DRIVE-CLiQ encoder initialization application error.
16001: DRIVE-CLiQ encoder initialization ALU error.
16002: DRIVE-CLiQ encoder HISI / SISI initialization error.
16003: DRIVE-CLiQ encoder safety initialization error.
16004: DRIVE-CLiQ encoder internal system error.
Remedy:
- replace the Sensor Module.
- if required, upgrade the firmware in the Sensor Module.
- contact the Hotline.

Reaction upon N: NONE
Acknowl. upon N: NONE

Reaction upon A: NONE
Acknowl. upon A: NONE

F32851 (N, A) Encoder 2 DRIVE-CLiQ (CU): Sign-of-life missing

Message value: Component number: %1, fault cause: %2
Drive object: SERVO_S110-CAN, SERVO_S110-DP, SERVO_S110-PN
Reaction: OFF1 (IASC/DCBRAKE, NONE, OFF2, OFF3)
Acknowledge: IMMEDIATELY
Cause: A DRIVE-CLiQ communication error has occurred from the Sensor Module (encoder 2) involved to the Control Unit.
The DRIVE-CLiQ component did not set the sign-of-life to the Control Unit.
Fault value (r0949, interpret hexadecimal):
yyxx hex: yy = component number, xx = fault cause
xx = 0A hex = 10 dec:
The sign-of-life bit in the receive telegram is not set.
Remedy: Upgrade the firmware of the component involved.
Reaction upon N: NONE
Acknowl. upon N: NONE
Reaction upon A: NONE
Acknowl. upon A: NONE

F32860 (N, A) Encoder 2 DRIVE-CLiQ (CU): Telegram error

Message value: Component number: %1, fault cause: %2
Drive object: SERVO_S110-CAN, SERVO_S110-DP, SERVO_S110-PN
Reaction: OFF1 (IASC/DCBRAKE, NONE, OFF2, OFF3)
Acknowledge: IMMEDIATELY
Cause: A DRIVE-CLiQ communication error has occurred from the Sensor Module (encoder 2) involved to the Control Unit.
Fault value (r0949, interpret hexadecimal):
yyxx hex: yy = component number, xx = fault cause
xx = 11 hex = 17 dec:
CRC error and the receive telegram is too early.
xx = 01 hex = 01 dec:
Checksum error (CRC error).
xx = 12 hex = 18 dec:
The telegram is shorter than that specified in the length byte or in the receive list and the receive telegram is too early.
xx = 02 hex = 02 dec:
Telegram is shorter than specified in the length byte or in the receive list.
xx = 13 hex = 19 dec:
The telegram is longer than that specified in the length byte or in the receive list and the receive telegram is too early.
xx = 03 hex = 03 dec:
Telegram is longer than specified in the length byte or in the receive list.
xx = 14 hex = 20 dec:
The length of the receive telegram does not match the receive list and the receive telegram is too early.
xx = 04 hex = 04 dec:
The length of the receive telegram does not match the receive list.
xx = 15 hex = 21 dec:
The type of the receive telegram does not match the receive list and the receive telegram is too early.
xx = 05 hex = 05 dec:
The type of the receive telegram does not match the receive list.
xx = 16 hex = 22 dec:
The address of the power unit in the telegram and in the receive list does not match and the receive telegram is too early.
xx = 06 hex = 06 dec:
The address of the power unit in the telegram and in the receive list do not match.
xx = 19 hex = 25 dec:
The error bit in the receive telegram is set and the receive telegram is too early.

xx = 09 hex = 09 dec:
The error bit in the receive telegram is set.
xx = 10 hex = 16 dec:
The receive telegram is too early.

Remedy: - carry out a POWER ON.
- check the electrical cabinet design and cable routing for EMC compliance
- check the DRIVE-CLiQ wiring (interrupted cable, contacts, ...).
See also: p9915 (DRIVE-CLiQ data transfer error shutdown threshold master)

Reaction upon N: NONE
Acknowl. upon N: NONE
Reaction upon A: NONE
Acknowl. upon A: NONE

F32885 (N, A) Encoder 2 DRIVE-CLiQ (CU): Cyclic data transfer error

Message value: Component number: %1, fault cause: %2
Drive object: SERVO_S110-CAN, SERVO_S110-DP, SERVO_S110-PN
Reaction: OFF1 (IASC/DCBRAKE, NONE, OFF2, OFF3)
Acknowledge: IMMEDIATELY
Cause: A DRIVE-CLiQ communication error has occurred from the Sensor Module (encoder 2) involved to the Control Unit.
The nodes do not send and receive in synchronism.
Fault value (r0949, interpret hexadecimal):
yyxx hex: yy = component number, xx = fault cause
xx = 1A hex = 26 dec:
Sign-of-life bit in the receive telegram not set and the receive telegram is too early.
xx = 21 hex = 33 dec:
The cyclic telegram has not been received.
xx = 22 hex = 34 dec:
Timeout in the telegram receive list.
xx = 40 hex = 64 dec:
Timeout in the telegram send list.
xx = 62 hex = 98 dec:
Error at the transition to cyclic operation.

Remedy: - check the power supply voltage of the component involved.
- carry out a POWER ON.
- replace the component involved.
See also: p9915 (DRIVE-CLiQ data transfer error shutdown threshold master)

Reaction upon N: NONE
Acknowl. upon N: NONE
Reaction upon A: NONE
Acknowl. upon A: NONE

F32886 (N, A) Encoder 2 DRIVE-CLiQ (CU): Error when sending DRIVE-CLiQ data

Message value: Component number: %1, fault cause: %2
Drive object: SERVO_S110-CAN, SERVO_S110-DP, SERVO_S110-PN
Reaction: OFF1 (IASC/DCBRAKE, NONE, OFF2, OFF3)
Acknowledge: IMMEDIATELY
Cause: A DRIVE-CLiQ communication error has occurred from the Sensor Module (encoder 2) involved to the Control Unit.
Data were not able to be sent.
Fault value (r0949, interpret hexadecimal):
yyxx hex: yy = component number, xx = fault cause
xx = 41 hex:
Telegram type does not match send list.

Remedy: Carry out a POWER ON.

Reaction upon N: NONE
Acknowl. upon N: NONE

Reaction upon A: NONE
Acknowl. upon A: NONE

F32887 (N, A) Encoder 2 DRIVE-CLiQ (CU): Component fault

Message value: Component number: %1, fault cause: %2
Drive object: SERVO_S110-CAN, SERVO_S110-DP, SERVO_S110-PN
Reaction: OFF1 (IASC/DCBRAKE, NONE, OFF2, OFF3)
Acknowledge: IMMEDIATELY
Cause: Fault detected on the DRIVE-CLiQ component involved (Sensor Module for encoder 2). Faulty hardware cannot be excluded.
Fault value (r0949, interpret hexadecimal):
yyxx hex: yy = component number, xx = fault cause
xx = 20 hex:
Error in the telegram header.
xx = 23 hex:
Receive error: The telegram buffer memory contains an error.
xx = 42 hex:
Send error: The telegram buffer memory contains an error.
xx = 43 hex:
Send error: The telegram buffer memory contains an error.
xx = 60 hex:
Response received too late during runtime measurement.
xx = 61 hex:
Time taken to exchange characteristic data too long.
Remedy: - check the DRIVE-CLiQ wiring (interrupted cable, contacts, ...).
- check the electrical cabinet design and cable routing for EMC compliance
- if required, use another DRIVE-CLiQ socket (p9904).
- replace the component involved.
Reaction upon N: NONE
Acknowl. upon N: NONE
Reaction upon A: NONE
Acknowl. upon A: NONE

F32895 (N, A) Encoder 2 DRIVE-CLiQ (CU): Alternating cyclic data transfer error

Message value: Component number: %1, fault cause: %2
Drive object: SERVO_S110-CAN, SERVO_S110-DP, SERVO_S110-PN
Reaction: OFF1 (IASC/DCBRAKE, NONE, OFF2, OFF3)
Acknowledge: IMMEDIATELY
Cause: A DRIVE-CLiQ communication error has occurred from the Sensor Module (encoder 2) involved to the Control Unit.
Fault value (r0949, interpret hexadecimal):
yyxx hex: yy = component number, xx = fault cause
xx = 0B hex:
Synchronization error during alternating cyclic data transfer.
Remedy: Carry out a POWER ON.
See also: p9915 (DRIVE-CLiQ data transfer error shutdown threshold master)
Reaction upon N: NONE
Acknowl. upon N: NONE
Reaction upon A: NONE
Acknowl. upon A: NONE

F32896 (N, A) Encoder 2 DRIVE-CLiQ (CU): Inconsistent component properties

Message value: Component number: %1
Drive object: SERVO_S110-CAN, SERVO_S110-DP, SERVO_S110-PN
Reaction: OFF2 (IASC/DCBRAKE, NONE, OFF1, OFF3, STOP1, STOP2)
Acknowledge: IMMEDIATELY
Cause: The properties of the DRIVE-CLiQ component (Sensor Module for encoder 2), specified by the fault value, have changed in an incompatible fashion with respect to the properties when booted. One cause can be, e.g. that a DRIVE-CLiQ cable or DRIVE-CLiQ component has been replaced.
Fault value (r0949, interpret decimal):
Component number.
Remedy: - carry out a POWER ON.
- when a component is replaced, the same component type and if possible the same firmware version should be used.
- when a cable is replaced, only cables whose length is the same as or as close as possible to the length of the original cables should be used (ensure compliance with the maximum cable length).
Reaction upon N: NONE
Acknowl. upon N: NONE
Reaction upon A: NONE
Acknowl. upon A: NONE

F32899 (N, A) Encoder 2: Unknown fault

Message value: New message: %1
Drive object: SERVO_S110-CAN, SERVO_S110-DP, SERVO_S110-PN
Reaction: OFF1 (IASC/DCBRAKE, NONE, OFF2, OFF3, STOP1, STOP2)
Acknowledge: IMMEDIATELY (POWER ON)
Cause: A fault occurred on the Sensor Module for encoder 2 that cannot be interpreted by the Control Unit firmware.
This can occur if the firmware on this component is more recent than the firmware on the Control Unit.
Fault value (r0949, interpret decimal):
Fault number.
Note:
If required, the significance of this new fault can be read about in a more recent description of the Control Unit.
Remedy: - replace the firmware on the Sensor Module by an older firmware version (r0148).
- upgrade the firmware on the Control Unit (r0018).
Reaction upon N: NONE
Acknowl. upon N: NONE
Reaction upon A: NONE
Acknowl. upon A: NONE

A32902 (F, N) Encoder 2: SPI-BUS error occurred

Message value: %1
Drive object: SERVO_S110-CAN, SERVO_S110-DP, SERVO_S110-PN
Reaction: NONE
Acknowledge: NONE
Cause: Error when operating the internal SPI bus.
Fault value (r0949, interpret hexadecimal):
Only for internal Siemens troubleshooting.
Remedy: - replace the Sensor Module.
- if required, upgrade the firmware in the Sensor Module.
- contact the Hotline.
Reaction upon F: NONE (ENCODER, IASC/DCBRAKE, OFF1, OFF2, OFF3, STOP1, STOP2)
Acknowl. upon F: IMMEDIATELY
Reaction upon N: NONE
Acknowl. upon N: NONE

A32903 (F, N) Encoder 2: I2C-BUS error occurred

Message value: %1
Drive object: SERVO_S110-CAN, SERVO_S110-DP, SERVO_S110-PN
Reaction: NONE
Acknowledge: NONE
Cause: Error when operating the internal I2C bus.
Fault value (r0949, interpret hexadecimal):
Only for internal Siemens troubleshooting.
Remedy: - replace the Sensor Module.
- if required, upgrade the firmware in the Sensor Module.
- contact the Hotline.
Reaction upon F: NONE (ENCODER, IASC/DCBRAKE, OFF1, OFF2, OFF3, STOP1, STOP2)
Acknowl. upon F: IMMEDIATELY
Reaction upon N: NONE
Acknowl. upon N: NONE

F32905 (N, A) Encoder 2: Parameterization error

Message value: Parameter: %1, supplementary information: %2
Drive object: SERVO_S110-CAN, SERVO_S110-DP, SERVO_S110-PN
Reaction: OFF1 (IASC/DCBRAKE, NONE, OFF2, OFF3, STOP1, STOP2)
Acknowledge: IMMEDIATELY
Cause: A parameter of encoder 2 was detected as being incorrect.
It is possible that the parameterized encoder type does not match the connected encoder.
The parameter involved can be determined as follows:
- determine the parameter number using the fault value (r0949).
- determine the parameter index (p0187).
Fault value (r0949, interpret decimal):
yyyyxxxx dec: yyyy = supplementary information, xxxx = parameter
yyyy = 0:
No information available.
yyyy = 1:
The component does not support HTL level (p0405.1 = 0) combined with track monitoring A/B <> -A/B (p0405.2 = 1).
yyyy = 2:
A code number for an identified encoder has been entered into p0400, however, no identification was carried out. Please start a new encoder identification.
yyyy = 3:
A code number for an identified encoder has been entered into p0400, however, no identification was carried out. Please select a listed encoder in p0400 with a code number < 10000.
yyyy = 4:
This component does not support SSI encoders (p0404.9 = 1) without track A/B.
yyyy = 5:
For SQW encoder, value in p4686 greater than in p0425.
yyyy = 6:
DRIVE-CLiQ encoder cannot be used with this firmware version.
yyyy = 7:
For the SQW encoder, the Xact1 correction (p0437.2) is only permitted with equidistant zero marks.
yyyy = 8:
The motor pole pair width is not supported by the linear scale being used.
Remedy: - check whether the connected encoder type matches the encoder that has been parameterized.
- correct the parameter specified by the fault value (r0949) and p0187.
- re parameter number = 314:
- check the pole pair number and measuring gear ratio. The quotient of the "pole pair number" divided by the "measuring gear ratio" must be less than or equal to 1000 ((r0313 * p0433) / p0432 <= 1000).
Reaction upon N: NONE
Acknowl. upon N: NONE

Reaction upon A: NONE
Acknowl. upon A: NONE

A32915 (F, N) Encoder 2: Configuration error

Message value: %1
Drive object: SERVO_S110-CAN, SERVO_S110-DP, SERVO_S110-PN
Reaction: NONE
Acknowledge: NONE
Cause: The configuration for encoder 2 is incorrect.
Alarm value (r2124, interpret decimal):
1: Re-parameterization between fault/alarm is not permissible.
419: When the fine resolution Gx_XIST2 is configured, the encoder identifies a maximum possible absolute position actual value (r0483) that can no longer be represented within 32 bits.
Remedy: Re alarm value = 1:
No re-parameterization between fault/alarm.
Re alarm value = 419:
Reduce the fine resolution (p0419).
Reaction upon F: NONE (IASC/DCBRAKE)
Acknowl. upon F: IMMEDIATELY
Reaction upon N: NONE
Acknowl. upon N: NONE

F32916 (N, A) Encoder 2: Parameterization fault

Message value: Parameter: %1, supplementary information: %2
Drive object: SERVO_S110-CAN, SERVO_S110-DP, SERVO_S110-PN
Reaction: OFF1 (IASC/DCBRAKE, NONE, OFF2, OFF3, STOP1, STOP2)
Acknowledge: IMMEDIATELY
Cause: A parameter of encoder 2 was detected as being incorrect.
It is possible that the parameterized encoder type does not match the connected encoder.
The parameter involved can be determined as follows:
- determine the parameter number using the fault value (r0949).
- determine the parameter index (p0187).
Fault value (r0949, interpret decimal):
Parameter number.
Note:
This fault is only output for encoders where r0404.10 = 1 or r0404.11 = 1. It corresponds to A32905 with encoders where r0404.10 = 0 and r0404.11 = 0.
Remedy: - check whether the connected encoder type matches the encoder that has been parameterized.
- correct the parameter specified by the fault value (r0949) and p0187.
Reaction upon N: NONE
Acknowl. upon N: NONE
Reaction upon A: NONE
Acknowl. upon A: NONE

A32920 (F, N) Encoder 2: Temperature sensor fault

Message value: Fault cause: %1, channel number: %2
Drive object: SERVO_S110-CAN, SERVO_S110-DP, SERVO_S110-PN
Reaction: NONE
Acknowledge: NONE
Cause: When evaluating the temperature sensor, an error occurred.
Alarm value (r2124, interpret decimal):
yyxx hex: yy: channel number, xx = fault cause
xx = 1: Wire breakage or sensor not connected (KTY: R > 1630 Ohm).
xx = 2: Measured resistance too low (PTC: R < 20 Ohm, KTY: R < 50 Ohm).
xx = Additional values:
Only for internal Siemens troubleshooting.

Remedy: - check that the encoder cable is the correct type and is correctly connected.
- check the temperature sensor selection in p0600 to p0603.
- replace the Sensor Module (hardware defect or incorrect calibration data).

Reaction upon F: NONE (IASC/DCBRAKE, OFF1, OFF2, OFF3, STOP1, STOP2)
Acknowl. upon F: IMMEDIATELY
Reaction upon N: NONE
Acknowl. upon N: NONE

A32940 (F, N) Sensor 2: Spindle clamping state error

Message value: %1
Drive object: SERVO_S110-CAN, SERVO_S110-DP, SERVO_S110-PN
Reaction: NONE
Acknowledge: NONE
Cause: The spindle clamping state is incorrect.
Fault value (r0949, interpret decimal):
Signal level from sensor S1.
Note:
A signal level of 500 mV corresponds to the numerical value 500 dec.
Remedy: - Check the clamped tool.
- Check the tolerance and if required, adapt (p5040).
- Check the thresholds and if required, adapt (p5041).
- Check analog sensor S1 and connections.

Reaction upon F: NONE (IASC/DCBRAKE, OFF1, OFF2, OFF3, STOP1, STOP2)
Acknowl. upon F: IMMEDIATELY
Reaction upon N: NONE
Acknowl. upon N: NONE

A32999 (F, N) Encoder 2: Unknown alarm

Message value: New message: %1
Drive object: SERVO_S110-CAN, SERVO_S110-DP, SERVO_S110-PN
Reaction: NONE
Acknowledge: NONE
Cause: A alarm has occurred on the Sensor Module for encoder 2 that cannot be interpreted by the Control Unit firmware.
This can occur if the firmware on this component is more recent than the firmware on the Control Unit.
Alarm value (r2124, interpret decimal):
Alarm number.
Note:
If required, the significance of this new alarm can be read about in a more recent description of the Control Unit.
Remedy: - replace the firmware on the Sensor Module by an older firmware version (r0148).
- upgrade the firmware on the Control Unit (r0018).

Reaction upon F: NONE (IASC/DCBRAKE, OFF1, OFF2, OFF3, STOP1, STOP2)
Acknowl. upon F: IMMEDIATELY (POWER ON)
Reaction upon N: NONE
Acknowl. upon N: NONE

A50001 (F) PROFINET configuration error

Message value: %1
Drive object: CU_S110-CAN, CU_S110-DP, CU_S110-PN
Reaction: NONE
Acknowledge: NONE
Cause: A PROFINET controller attempts to establish a connection using an incorrect configuring telegram. The "Shared Device" function has been activated (p8929 = 2).
Alarm value (r2124, interpret decimal):
10: A CPU sends a PROFIsafe telegram.
11: F CPU sends a PZD telegram.
12: F CPU without an A CPU.

13: F CPU with more PROFIsafe subslots than activated with p9601.3.
14: F CPU with fewer PROFIsafe subslots than activated with p9601.3.
See also: p8929 (PN remote controller number), p9601 (SI enable functions integrated in the drive (processor 1))

Remedy: Check the configuration of the PROFINET controllers as well as the p8929 and p9601.3 setting.

Reaction upon F: NONE

Acknowl. upon F: IMMEDIATELY

A50020 (F) PROFINET: Second controller missing

Message value: -

Drive object: CU_S110-CAN, CU_S110-DP, CU_S110-PN

Reaction: NONE

Acknowledge: NONE

Cause: The PROFINET function "Shared Device" has been activated (p8929 = 2). However, only the connection to a PROFINET controller is present.
See also: p8929 (PN remote controller number)

Remedy: Check the configuration of the PROFINET controllers as well as the p8929 setting.

Reaction upon F: NONE

Acknowl. upon F: IMMEDIATELY

F50510 FBLOCKS: Logon of the run-time group rejected

Message value: -

Drive object: All objects

Reaction: NONE

Acknowledge: IMMEDIATELY

Cause: When the run-time groups of the free function blocks attempted to log on with the sampling time management, the logon of at least one run-time group was rejected.
Too many different hardware sampling times may have been assigned to the free function blocks.
See also: r20008 (Hardware sampling times available)

Remedy: - check number of different hardware sampling times (r20008, r7903).
- if necessary, deactivate again the drive object on which the function module "free function blocks" was last activated (p0108[0...15].18 = 0). Then carry out a POWER ON.
Note:
The assignment of drive object numbers to the index numbers of p0108[0...15] can be read out in p0101[0...15]; the assignment to the drive object types can be read out in p0107[0...15] on the drive object of the CU or CX (only with SM150).

F50511 FBLOCKS: Memory no longer available for free function blocks

Message value: -

Drive object: All objects

Reaction: NONE

Acknowledge: IMMEDIATELY

Cause: When the free function blocks were activated, more memory was requested than was available on the Control Unit.

Remedy: Deactivate again the drive object on which the function module "free function blocks" was last activated (p0108[0...15].18 = 0). Then carry out a POWER ON.
Note:
The assignment of drive object numbers to the index numbers of p0108[0...15] can be read out in p0101[0...15]; the assignment to the drive object types can be read out in p0107[0...15] on the drive object of the CU or CX (only with SM150).

A50513 (F) FBLOCKS: Run sequence value already assigned

Message value: -

Drive object: All objects

Reaction: NONE

Acknowledge: NONE

Cause: An attempt was made to assign a run sequence value already assigned to a function block on this drive object to another additional function block on the same drive object. A run sequence value can only be precisely assigned to one function block on one drive object.

Remedy: Set another value that is still available on this drive object for the run sequence.
Reaction upon F: NONE
Acknowl. upon F: IMMEDIATELY

A50514 FBLOCKS: Sampling time of fixed run-time group differs

Message value: -
Drive object: All objects
Reaction: NONE
Acknowledge: NONE
Cause: The sampling time of a system function was set to a value (p0112, p0115) lower than the smallest permissible sampling time that is allowed for the fixed run-time group belonging to this system block (1 ms). The fixed run-time group involved is assigned as a minimum to one block.
Remedy: Using p0112 or p0115, increase the sampling time of the system function to the minimum permissible sampling time for the run-time groups of 1 ms or change the sampling time assignment of this run-time group in p20000[0...9].

A50517 FBLOCKS: Int. meas. active

Message value: -
Drive object: All objects
Reaction: NONE
Acknowledge: NONE
Cause: A Siemens internal measurement has been activated.
Remedy: Carry out a POWER ON (power off/on) for the Control Unit involved.

F50518 FBLOCKS: Sampling time of free run-time group differs at download

Message value: %1
Drive object: All objects
Reaction: NONE
Acknowledge: IMMEDIATELY
Cause: In the STARTER/SCOUT project that was downloaded, the hardware sampling time of a free run-time group (1 <= p20000[i] <= 256) was set to a value that was either too low or too high.
The sampling time must be between 1 ms and the value r20003 - r20002.
If the sampling time of the selected free run-time group is < 1 ms, the equivalent value of 1 ms is used.
If the value >= r20003, then the sampling time is set to the next higher or the same software sampling time >= r21003.
Fault value (r0949, interpret decimal):
Number of the p20000 index of the run-time group where the sampling time is incorrectly set.
Number of the run-time group = fault value + 1
Note:
For SIMOTION D410, r20003 (unlike all the other Control Units) is automatically set the same as the PROFIBUS sampling time.
See also: r20008 (Hardware sampling times available)
Remedy: - correctly set the sampling time of the run-time group.
- if required, take all of the blocks from the run-time group.
Note:
Fault F50518 only detects an incorrectly parameterized run-time group. If, after correcting p20000[i] in the project, this error occurs again at download, then the run-time group involved should be identified using the fault value (r0949) and the sampling time correctly set.

Appendix

A

Content

A.1	ASCII table (characters that can be displayed)	1214
A.2	List for motor code / encoder code	1217
A.3	List of abbreviations	1247

A.1 ASCII table (characters that can be displayed)

The following table includes the decimal and hexadecimal notation of ASCII characters that can be displayed (printable).

Table A-1 ASCII table (characters that can be displayed)

Character	Decimal	Hexadecimal	Meaning
	32	20	Space
!	33	21	Exclamation mark
"	34	22	Quotation mark
#	35	23	Number sign
$	36	24	Dollar
%	37	25	Percent
&	38	26	Ampersand
’	39	27	Apostrophe, closing single quotation mark
(	40	28	Opening parenthesis
)	41	29	Closing parenthesis
*	42	2A	Asterisk
+	43	2B	Plus
,	44	2C	Comma
-	45	2D	Hyphen, minus
.	46	2E	Period, decimal point
/	47	2F	Slash, slant
0	48	30	Digit 0
1	49	31	Digit 1
2	50	32	Digit 2
3	51	33	Digit 3
4	52	34	Digit 4
5	53	35	Digit 5
6	54	36	Digit 6
7	55	37	Digit 7
8	56	38	Digit 8
9	57	39	Digit 9
:	58	3A	Colon
;	59	3B	Semicolon
<	60	3C	Less than
=	61	3D	Equals
>	62	3E	Greater than
?	63	3F	Question mark
@	64	40	Commercial At

Table A-1 ASCII table (characters that can be displayed), continued

Character	Decimal	Hexadecimal	Meaning
A	65	41	Capital letter A
B	66	42	Capital letter B
C	67	43	Capital letter C
D	68	44	Capital letter D
E	69	45	Capital letter E
F	70	46	Capital letter F
G	71	47	Capital letter G
H	72	48	Capital letter H
I	73	49	Capital letter I
J	74	4A	Capital letter J
K	75	4B	Capital letter K
L	76	4C	Capital letter L
M	77	4D	Capital letter M
N	78	4E	Capital letter N
O	79	4F	Capital letter O
P	80	50	Capital letter P
Q	81	51	Capital letter Q
R	82	52	Capital letter R
S	83	53	Capital letter S
T	84	54	Capital letter T
U	85	55	Capital letter U
V	86	56	Capital letter V
W	87	57	Capital letter W
X	88	58	Capital letter X
Y	89	59	Capital letter Y
Z	90	5A	Capital letter Z
[	91	5B	Opening bracket
\	92	5C	Backslash
]	93	5D	Closing bracket
^	94	5E	Circumflex
_	95	5F	Underline
‘	96	60	Opening single quotation mark
a	97	61	Small letter a
b	98	62	Small letter b
c	99	63	Small letter c
d	100	64	Small letter d

Table A-1 ASCII table (characters that can be displayed), continued

Character	Decimal	Hexadecimal	Meaning
e	101	65	Small letter e
f	102	66	Small letter f
g	103	67	Small letter g
h	104	68	Small letter h
i	105	69	Small letter i
j	106	6A	Small letter j
k	107	6B	Small letter k
l	108	6C	Small letter l
m	109	6D	Small letter m
n	110	6E	Small letter n
o	111	6F	Small letter o
p	112	70	Small letter p
q	113	71	Small letter q
r	114	72	Small letter r
s	115	73	Small letter s
t	116	74	Small letter t
u	117	75	Small letter u
v	118	76	Small letter v
w	119	77	Small letter w
x	120	78	Small letter x
y	121	79	Small letter y
z	122	7A	Small letter z
{	123	7B	Opening brace
|	124	7C	Vertical line
}	125	7D	Closing brace
~	126	7E	Tilde

A.2 List for motor code / encoder code

A.2.1 Motor code

Induction motors (version: 4403900)

Table A-2 Motor code for induction motors

Order No.	Motor type (p0300)	Motor code (p0301)
1PH4103-4NF2x-xxxx	104	10401
1PH4103-4xF5x-xxxx	104	10421
1PH4105-4NF2x-xxxx	104	10403
1PH4105-4xF5x-xxxx	104	10422
1PH4107-4NF2x-xxxx	104	10405
1PH4107-4xF5x-xxxx	104	10423
1PH4133-4NF2x-xxxx	104	10407
1PH4133-4xF5x-xxxx	104	10424
1PH4135-4NF2x-xxxx	104	10409
1PH4135-4xF5x-xxxx	104	10425
1PH4135-xxF2x(L37)	104	10434
1PH4137-4NF2x-xxxx	104	10411
1PH4137-4xF5x-xxxx	104	10426
1PH4138-4NF2x-xxxx	104	10413
1PH4163-4NF2x-xxxx	104	10416
1PH4163-4xF5x-xxxx	104	10427
1PH4163-xxF2x(L37)	104	10431
1PH4167-4NF2x-xxxx	104	10418
1PH4167-4xF5x-xxxx	104	10428
1PH4167-xxF2x(L37)	104	10432
1PH4168-4NF2x-xxxx	104	10420
1PH4168-4xF5x-xxxx	104	10429
1PH4168-xxF2x(L37)	104	10433
1PH7101-xxFxx-xLxx	107	12701
1PH7101-xxFxx-xxxx	107	10701
1PH7103-xxDxx-xLxx	107	12702
1PH7103-xxDxx-xxxx	107	10702
1PH7103-xxFxx-xLxx	107	12703
1PH7103-xxFxx-xxxx	107	10703
1PH7103-xxGxx-xLxx	107	12704

Table A-2 Motor code for induction motors, continued

Order No.	Motor type (p0300)	Motor code (p0301)
1PH7103-xxGxx-xxxx	107	10704
1PH7105-xxFxx-xLxx	107	12705
1PH7105-xxFxx-xxxx	107	10705
1PH7107-xxDxx-xLxx	107	12706
1PH7107-xxDxx-xxxx	107	10706
1PH7107-xxFxx-xLxx	107	12707
1PH7107-xxFxx-xxxx	107	10707
1PH7107-xxGxx-xLxx	107	12708
1PH7107-xxGxx-xxxx	107	10708
1PH7131-xxFxx-xLxx	107	12709
1PH7131-xxFxx-xxxx	107	10709
1PH7133-xxDxx-xLxx	107	12710
1PH7133-xxDxx-xxxx	107	10710
1PH7133-xxFxx-xLxx	107	12711
1PH7133-xxFxx-xxxx	107	10711
1PH7133-xxGxx-xLxx	107	12712
1PH7133-xxGxx-xxxx	107	10712
1PH7135-xxFxx-xLxx	107	12713
1PH7135-xxFxx-xxxx	107	10713
1PH7137-xxBxx-xxxx	107	10766
1PH7137-xxDxx-xLxx	107	12714
1PH7137-xxDxx-xxxx	107	10714
1PH7137-xxFxx-xLxx	107	12715
1PH7137-xxFxx-xxxx	107	10715
1PH7137-xxGxx-xLxx	107	12716
1PH7137-xxGxx-xxxx	107	10716
1PH7163-xxBxx-xLxx	107	12717
1PH7163-xxBxx-xxxx	107	10717
1PH7163-xxDxx-xLxx	107	12718
1PH7163-xxDxx-xxxx	107	10718
1PH7163-xxFxx-xLxx	107	12719
1PH7163-xxFxx-xxxx	107	10719
1PH7163-xxGxx-xLxx	107	12720
1PH7163-xxGxx-xxxx	107	10720
1PH7167-xxBxx-xLxx	107	12721
1PH7167-xxBxx-xxxx	107	10721

Table A-2 Motor code for induction motors, continued

Order No.	Motor type (p0300)	Motor code (p0301)
1PH7167-xxDxx-xLxx	107	12722
1PH7167-xxDxx-xxxx	107	10722
1PH7167-xxFxx-xLxx	107	12723
1PH7167-xxFxx-xxxx	107	10723
1PH7167-xxGxx-xLxx	107	12724
1PH7167-xxGxx-xxxx	107	10724
1PH7184-xxBxx-xxxx	107	10725
1PH7184-xxDxx-xxxx	107	10735
1PH7184-xxExx-xxxx	107	10727
1PH7184-xxFxx-xxxx	107	10736
1PH7184-xxLxx-xxxx	107	10737
1PH7184-xxTxx-xxxx	107	10726
1PH7186-xxBxx-xxxx	107	10770
1PH7186-xxDxx-xxxx	107	10734
1PH7186-xxExx-xxxx	107	10730
1PH7186-xxFxx-xxxx	107	10768
1PH7186-xxLxx-xxxx	107	10769
1PH7186-xxTxx-xxxx	107	10729
1PH7224-xxBxx-xxxx	107	10743
1PH7224-xxCxx-xxxx	107	10731
1PH7224-xxDxx-xxxx	107	10738
1PH7224-xxFxx-xxxx	107	10732
1PH7224-xxLxx-xxxx	107	10744
1PH7224-xxUxx-xxxx	107	10745
1PH7226-xxBxx-xxxx	107	10746
1PH7226-xxDxx-xxxx	107	10747
1PH7226-xxFxx-xxxx	107	10739
1PH7226-xxLxx-xxxx	107	10748
1PH7228-xxBxx-xxxx	107	10749
1PH7228-xxDxx-xxxx	107	10750
1PH7228-xxFxx-xxxx	107	10741
1PH7228-xxLxx-xxxx	107	10751
1PH7284-xxBxx-xxxx	107	10752
1PH7284-xxCxx-xxxx	107	10753
1PH7284-xxDxx-xxxx	107	10754
1PH7284-xxFxx-xxxx	107	10755

Table A-2 Motor code for induction motors, continued

Order No.	Motor type (p0300)	Motor code (p0301)
1PH7286-xxBxx-xxxx	107	10756
1PH7286-xxCxx-xxxx	107	10757
1PH7286-xxDxx-xxxx	107	10758
1PH7286-xxFxx-xxxx	107	10759
1PH7288-xxBxx-xxxx	107	10760
1PH7288-xxCxx-xxxx	107	10761
1PH7288-xxDxx-xxxx	107	10762
1PH7288-xxFxx-xxxx	107	10763
1PH8081-1xT2x-xxxx	108	14854
1PH8081-1xU0x-xxxx	108	14855
1PH8081-1xU1x-xxxx	108	14856
1PH8081-1xU2x-xxxx	108	14857
1PH8081-1xV0x-xxxx	108	14858
1PH8081-1xV1x-xxxx	108	14859
1PH8081-1xV2x-xxxx	108	14860
1PH8081-1xW0x-xxxx	108	14861
1PH8081-1xW1x-xxxx	108	14862
1PH8081-1xW2x-xxxx	108	14863
1PH8083-1xF0x-xxxx	108	10801
1PH8083-1xF1x-xxxx	108	10864
1PH8083-1xF2x-xxxx	108	10865
1PH8083-1xG0x-xxxx	108	10866
1PH8083-1xG1x-xxxx	108	10867
1PH8083-1xG2x-xxxx	108	10868
1PH8083-1xM0x-xxxx	108	10869
1PH8083-1xM1x-xxxx	108	10870
1PH8083-1xN0x-xxxx	108	10879
1PH8083-1xN1x-xxxx	108	10880
1PH8083-1xN2x-xxxx	108	10881
1PH8083-1xT2x-xxxx	108	14864
1PH8083-1xU2x-xxxx	108	14865
1PH8083-1xV0x-xxxx	108	14866
1PH8083-1xV1x-xxxx	108	14867
1PH8083-1xW0x-xxxx	108	14868
1PH8083-1xW1x-xxxx	108	14869
1PH8087-1xF0x-xxxx	108	10871

Table A-2 Motor code for induction motors, continued

Order No.	Motor type (p0300)	Motor code (p0301)
1PH8087-1xF1x-xxxx	108	10872
1PH8087-1xF2x-xxxx	108	10873
1PH8087-1xG0x-xxxx	108	10874
1PH8087-1xG1x-xxxx	108	10875
1PH8087-1xG2x-xxxx	108	10876
1PH8087-1xM0x-xxxx	108	10877
1PH8087-1xM1x-xxxx	108	10878
1PH8087-1xN0x-xxxx	108	10882
1PH8087-1xN1x-xxxx	108	10883
1PH8087-1xN2x-xxxx	108	10884
1PH8087-1xU2x-xxxx	108	14870
1PH8087-1xV0x-xxxx	108	14871
1PH8087-1xV1x-xxxx	108	14872
1PH8089-1xM0x-xxxx	108	11876
1PH8101-1xF0x-xxxx	108	10885
1PH8101-1xF1x-xxxx	108	10886
1PH8101-1xF2x-xxxx	108	10887
1PH8101-1xG2x-xxxx	108	10888
1PH8101-1xS0x-xxxx	108	10889
1PH8101-1xS0x-xxxx	108	10890
1PH8101-1xS1x-xxxx	108	10891
1PH8101-1xS1x-xxxx	108	10892
1PH8103-1xD0x-xxxx	108	10893
1PH8103-1xD1x-xxxx	108	10894
1PH8103-1xF0x-xxxx	108	10895
1PH8103-1xF1x-xxxx	108	10896
1PH8103-1xF2x-xxxx	108	10897
1PH8103-1xG0x-xxxx	108	10898
1PH8103-1xG1x-xxxx	108	10899
1PH8103-1xG2x-xxxx	108	11800
1PH8103-1xM0x-xxxx	108	11820
1PH8103-1xM1x-xxxx	108	11821
1PH8103-1xM2x-xxxx	108	11822
1PH8105-1xF0x-xxxx	108	11801
1PH8105-1xF1x-xxxx	108	11802
1PH8105-1xF2x-xxxx	108	11803

Table A-2 Motor code for induction motors, continued

Order No.	Motor type (p0300)	Motor code (p0301)
1PH8105-1xG2x-xxxx	108	11804
1PH8105-1xM2x-xxxx	108	11823
1PH8105-1xS0x-xxxx	108	11805
1PH8105-1xS0x-xxxx	108	11806
1PH8105-1xS1x-xxxx	108	11807
1PH8105-1xS1x-xxxx	108	11808
1PH8107-1xB0x-xxxx	108	14874
1PH8107-1xB1x-xxxx	108	14875
1PH8107-1xD0x-xxxx	108	11809
1PH8107-1xD1x-xxxx	108	11810
1PH8107-1xF0x-xxxx	108	11811
1PH8107-1xF1x-xxxx	108	11812
1PH8107-1xF2x-xxxx	108	11813
1PH8107-1xG0x-xxxx	108	11814
1PH8107-1xG1x-xxxx	108	11815
1PH8107-1xM0x-xxxx	108	11824
1PH8107-1xM1x-xxxx	108	11825
1PH8107-1xM2x-xxxx	108	11826
1PH8107-1xS0x-xxxx	108	11816
1PH8107-1xS0x-xxxx	108	11817
1PH8107-1xS1x-xxxx	108	11818
1PH8107-1xS1x-xxxx	108	11819
1PH8131-1xF0x-xxxx	108	10803
1PH8131-1xF1x-xxxx	108	10804
1PH8131-1xF2x-xxxx	108	10805
1PH8131-1xG2x-xxxx	108	10806
1PH8131-1xS0x-xxxx	108	10807
1PH8131-1xS0x-xxxx	108	10808
1PH8131-1xS1x-xxxx	108	10809
1PH8131-1xS1x-xxxx	108	10810
1PH8133-1xB0x-xxxx	108	14847
1PH8133-1xB1x-xxxx	108	14848
1PH8133-1xD0x-xxxx	108	10811
1PH8133-1xD1x-xxxx	108	10812
1PH8133-1xF0x-xxxx	108	10813
1PH8133-1xF1x-xxxx	108	10814

Table A-2 Motor code for induction motors, continued

Order No.	Motor type (p0300)	Motor code (p0301)
1PH8133-1xF2x-xxxx	108	10815
1PH8133-1xG0x-xxxx	108	10816
1PH8133-1xG1x-xxxx	108	10817
1PH8133-1xG2x-xxxx	108	10818
1PH8135-1xB0x-xxxx	108	14840
1PH8135-1xB1x-xxxx	108	14841
1PH8135-1xF0x-xxxx	108	10819
1PH8135-1xF1x-xxxx	108	10820
1PH8135-1xF2x-xxxx	108	10821
1PH8135-1xG2x-xxxx	108	10822
1PH8135-1xS0x-xxxx	108	10823
1PH8135-1xS0x-xxxx	108	10824
1PH8135-1xS1x-xxxx	108	10825
1PH8135-1xS1x-xxxx	108	10826
1PH8137-1xB0x-xxxx	108	14876
1PH8137-1xB1x-xxxx	108	14877
1PH8137-1xD0x-xxxx	108	10827
1PH8137-1xD1x-xxxx	108	10828
1PH8137-1xF0x-xxxx	108	10829
1PH8137-1xF1x-xxxx	108	10830
1PH8137-1xF2x-xxxx	108	10831
1PH8137-1xG0x-xxxx	108	10832
1PH8137-1xG1x-xxxx	108	10833
1PH8137-1xS0x-xxxx	108	10834
1PH8137-1xS0x-xxxx	108	10835
1PH8137-1xS1x-xxxx	108	10836
1PH8137-1xS1x-xxxx	108	10837
1PH8138-1xF2x-xxxx	108	10838
1PH8163-1xB0x-xxxx	108	11882
1PH8163-1xB1x-xxxx	108	11883
1PH8163-1xD0x-xxxx	108	11884
1PH8163-1xD1x-xxxx	108	11885
1PH8163-1xF0x-xxxx	108	11886
1PH8163-1xF1x-xxxx	108	11887
1PH8163-1xF2x-xxxx	108	11888
1PH8163-1xG0x-xxxx	108	11889

Table A-2 Motor code for induction motors, continued

Order No.	Motor type (p0300)	Motor code (p0301)
1PH8163-1xG1x-xxxx	108	11890
1PH8163-1xG2x-xxxx	108	11891
1PH8165-1xB0x-xxxx	108	11892
1PH8165-1xB1x-xxxx	108	11893
1PH8165-1xD0x-xxxx	108	11894
1PH8165-1xD1x-xxxx	108	11895
1PH8165-1xF0x-xxxx	108	11896
1PH8165-1xF1x-xxxx	108	11897
1PH8165-1xF2x-xxxx	108	11898
1PH8165-1xG0x-xxxx	108	11899
1PH8165-1xG1x-xxxx	108	12801
1PH8165-1xG2x-xxxx	108	12802
1PH8166-1xF2x-xxxx	108	12803
1PH8166-1xG2x-xxxx	108	12804
1PH8184-1xB0x-xxxx	108	12828
1PH8184-1xB1x-xxxx	108	12829
1PH8184-1xB2x-xxxx	108	12839
1PH8184-1xB3x-xxxx	108	12830
1PH8184-1xB4x-xxxx	108	12831
1PH8184-1xC0x-xxxx	108	12832
1PH8184-1xC1x-xxxx	108	12833
1PH8184-1xC2x-xxxx	108	10840
1PH8184-1xC3x-xxxx	108	12834
1PH8184-1xC4x-xxxx	108	12835
1PH8184-1xD0x-xxxx	108	12836
1PH8184-1xD1x-xxxx	108	12837
1PH8184-1xD2x-xxxx	108	10841
1PH8184-1xD3x-xxxx	108	12838
1PH8184-1xD4x-xxxx	108	14836
1PH8184-1xF0x-xxxx	108	12840
1PH8184-1xF1x-xxxx	108	12841
1PH8184-1xF2x-xxxx	108	10842
1PH8184-1xF3x-xxxx	108	12842
1PH8184-1xF4x-xxxx	108	12843
1PH8184-1xL0x-xxxx	108	12844
1PH8184-1xL1x-xxxx	108	12845

Table A-2 Motor code for induction motors, continued

Order No.	Motor type (p0300)	Motor code (p0301)
1PH8184-1xL2x-xxxx	108	10843
1PH8184-1xL3x-xxxx	108	12846
1PH8184-1xL4x-xxxx	108	12847
1PH8186-1xB0x-xxxx	108	12848
1PH8186-1xB1x-xxxx	108	12849
1PH8186-1xB2x-xxxx	108	10844
1PH8186-1xB3x-xxxx	108	12850
1PH8186-1xB4x-xxxx	108	12851
1PH8186-1xC0x-xxxx	108	12852
1PH8186-1xC1x-xxxx	108	12853
1PH8186-1xC2x-xxxx	108	10845
1PH8186-1xC3x-xxxx	108	12854
1PH8186-1xC4x-xxxx	108	12855
1PH8186-1xD0x-xxxx	108	12856
1PH8186-1xD1x-xxxx	108	12857
1PH8186-1xD2x-xxxx	108	10846
1PH8186-1xD3x-xxxx	108	12858
1PH8186-1xD4x-xxxx	108	12859
1PH8186-1xF0x-xxxx	108	12860
1PH8186-1xF1x-xxxx	108	12861
1PH8186-1xF2x-xxxx	108	10847
1PH8186-1xF3x-xxxx	108	12862
1PH8186-1xF4x-xxxx	108	12863
1PH8186-1xL0x-xxxx	108	12864
1PH8186-1xL1x-xxxx	108	12865
1PH8186-1xL2x-xxxx	108	10848
1PH8186-1xL3x-xxxx	108	12866
1PH8186-1xL4x-xxxx	108	12867
1PH8224-1xB0x-xxxx	108	12868
1PH8224-1xB1x-xxxx	108	12869
1PH8224-1xB2x-xxxx	108	10849
1PH8224-1xB3x-xxxx	108	12870
1PH8224-1xB4x-xxxx	108	12871
1PH8224-1xC0x-xxxx	108	12872
1PH8224-1xC1x-xxxx	108	12873
1PH8224-1xC2x-xxxx	108	10850

Table A-2 Motor code for induction motors, continued

Order No.	Motor type (p0300)	Motor code (p0301)
1PH8224-1xC3x-xxxx	108	12874
1PH8224-1xC4x-xxxx	108	12875
1PH8224-1xD0x-xxxx	108	12876
1PH8224-1xD1x-xxxx	108	12877
1PH8224-1xD2x-xxxx	108	10851
1PH8224-1xD3x-xxxx	108	12878
1PH8224-1xD4x-xxxx	108	12879
1PH8224-1xF0x-xxxx	108	12880
1PH8224-1xF1x-xxxx	108	12881
1PH8224-1xF2x-xxxx	108	10852
1PH8224-1xF3x-xxxx	108	12882
1PH8224-1xF4x-xxxx	108	12883
1PH8224-1xL0x-xxxx	108	12884
1PH8224-1xL1x-xxxx	108	12885
1PH8224-1xL2x-xxxx	108	10853
1PH8224-1xL3x-xxxx	108	12886
1PH8224-1xL4x-xxxx	108	12887
1PH8226-1xB0x-xxxx	108	12888
1PH8226-1xB1x-xxxx	108	12889
1PH8226-1xB2x-xxxx	108	10854
1PH8226-1xB3x-xxxx	108	12890
1PH8226-1xB4x-xxxx	108	12891
1PH8226-1xC0x-xxxx	108	12892
1PH8226-1xC1x-xxxx	108	12893
1PH8226-1xC2x-xxxx	108	10855
1PH8226-1xC3x-xxxx	108	12894
1PH8226-1xC4x-xxxx	108	12895
1PH8226-1xD0x-xxxx	108	12896
1PH8226-1xD1x-xxxx	108	12897
1PH8226-1xD2x-xxxx	108	10856
1PH8226-1xD3x-xxxx	108	12898
1PH8226-1xD4x-xxxx	108	12899
1PH8226-1xF0x-xxxx	108	13800
1PH8226-1xF1x-xxxx	108	13801
1PH8226-1xF2x-xxxx	108	10857
1PH8226-1xF3x-xxxx	108	13802

Table A-2 Motor code for induction motors, continued

Order No.	Motor type (p0300)	Motor code (p0301)
1PH8226-1xF4x-xxxx	108	13803
1PH8226-1xL0x-xxxx	108	13804
1PH8226-1xL1x-xxxx	108	13805
1PH8226-1xL2x-xxxx	108	10858
1PH8226-1xL3x-xxxx	108	13806
1PH8226-1xL4x-xxxx	108	13807
1PH8228-1xB0x-xxxx	108	13808
1PH8228-1xB1x-xxxx	108	13809
1PH8228-1xB2x-xxxx	108	10859
1PH8228-1xB3x-xxxx	108	13810
1PH8228-1xB4x-xxxx	108	13811
1PH8228-1xC0x-xxxx	108	13812
1PH8228-1xC1x-xxxx	108	13813
1PH8228-1xC2x-xxxx	108	10860
1PH8228-1xC3x-xxxx	108	13814
1PH8228-1xC4x-xxxx	108	13815
1PH8228-1xD0x-xxxx	108	13816
1PH8228-1xD1x-xxxx	108	13817
1PH8228-1xD2x-xxxx	108	10861
1PH8228-1xD3x-xxxx	108	13818
1PH8228-1xD4x-xxxx	108	13819
1PH8228-1xF0x-xxxx	108	13820
1PH8228-1xF1x-xxxx	108	13821
1PH8228-1xF2x-xxxx	108	10862
1PH8228-1xF3x-xxxx	108	13822
1PH8228-1xF4x-xxxx	108	13823
1PH8228-1xL0x-xxxx	108	13824
1PH8228-1xL1x-xxxx	108	13825
1PH8228-1xL2x-xxxx	108	10863
1PH8228-1xL3x-xxxx	108	13826
1PH8228-1xL4x-xxxx	108	13827
1PH8284-1xB0x-xxxx	108	13828
1PH8284-1xB1x-xxxx	108	13829
1PH8284-1xB2x-xxxx	108	11827
1PH8284-1xC0x-xxxx	108	13830
1PH8284-1xC1x-xxxx	108	13831

Table A-2 Motor code for induction motors, continued

Order No.	Motor type (p0300)	Motor code (p0301)
1PH8284-1xC2x-xxxx	108	11828
1PH8284-1xC3x-xxxx	108	13832
1PH8284-1xC4x-xxxx	108	13833
1PH8284-1xD0x-xxxx	108	13834
1PH8284-1xD1x-xxxx	108	13835
1PH8284-1xD2x-xxxx	108	11829
1PH8284-1xD3x-xxxx	108	13836
1PH8284-1xD4x-xxxx	108	13837
1PH8284-1xF0x-xxxx	108	13838
1PH8284-1xF1x-xxxx	108	13839
1PH8284-1xF2x-xxxx	108	11830
1PH8284-1xF3x-xxxx	108	13840
1PH8284-1xF4x-xxxx	108	13841
1PH8284-1xH0x-xxxx	108	13842
1PH8284-1xH1x-xxxx	108	13843
1PH8284-1xH2x-xxxx	108	11831
1PH8284-1xK0x-xxxx	108	13844
1PH8284-1xK1x-xxxx	108	13845
1PH8284-1xK2x-xxxx	108	11832
1PH8284-1xK3x-xxxx	108	13846
1PH8284-1xK4x-xxxx	108	13847
1PH8284-1xU0x-xxxx	108	13848
1PH8284-1xU1x-xxxx	108	13849
1PH8284-1xU2x-xxxx	108	11833
1PH8284-1xU3x-xxxx	108	13850
1PH8284-1xU4x-xxxx	108	13851
1PH8284-1xW0x-xxxx	108	13852
1PH8284-1xW1x-xxxx	108	13853
1PH8284-1xW2x-xxxx	108	11834
1PH8284-1xW3x-xxxx	108	13854
1PH8284-1xW4x-xxxx	108	13855
1PH8286-1xB0x-xxxx	108	13856
1PH8286-1xB1x-xxxx	108	13857
1PH8286-1xB2x-xxxx	108	11835
1PH8286-1xC0x-xxxx	108	13858
1PH8286-1xC1x-xxxx	108	13859

Table A-2 Motor code for induction motors, continued

Order No.	Motor type (p0300)	Motor code (p0301)
1PH8286-1xC2x-xxxx	108	11836
1PH8286-1xC3x-xxxx	108	13860
1PH8286-1xC4x-xxxx	108	13861
1PH8286-1xD0x-xxxx	108	13862
1PH8286-1xD1x-xxxx	108	13863
1PH8286-1xD2x-xxxx	108	11837
1PH8286-1xD3x-xxxx	108	13864
1PH8286-1xD4x-xxxx	108	13865
1PH8286-1xF0x-xxxx	108	13866
1PH8286-1xF1x-xxxx	108	13867
1PH8286-1xF2x-xxxx	108	11838
1PH8286-1xF3x-xxxx	108	13868
1PH8286-1xF4x-xxxx	108	13869
1PH8286-1xH0x-xxxx	108	13870
1PH8286-1xH1x-xxxx	108	13871
1PH8286-1xH2x-xxxx	108	11839
1PH8286-1xK0x-xxxx	108	13872
1PH8286-1xK1x-xxxx	108	13873
1PH8286-1xK2x-xxxx	108	11840
1PH8286-1xK3x-xxxx	108	13874
1PH8286-1xK4x-xxxx	108	13875
1PH8286-1xU0x-xxxx	108	13876
1PH8286-1xU1x-xxxx	108	13877
1PH8286-1xU2x-xxxx	108	11841
1PH8286-1xU3x-xxxx	108	13878
1PH8286-1xU4x-xxxx	108	13879
1PH8286-1xW0x-xxxx	108	13880
1PH8286-1xW1x-xxxx	108	13881
1PH8286-1xW2x-xxxx	108	11842
1PH8286-1xW3x-xxxx	108	13882
1PH8286-1xW4x-xxxx	108	13883
1PH8288-1xB0x-xxxx	108	13884
1PH8288-1xB1x-xxxx	108	13885
1PH8288-1xB2x-xxxx	108	11843
1PH8288-1xC0x-xxxx	108	13886
1PH8288-1xC1x-xxxx	108	13887

Table A-2 Motor code for induction motors, continued

Order No.	Motor type (p0300)	Motor code (p0301)
1PH8288-1xC2x-xxxx	108	11844
1PH8288-1xC3x-xxxx	108	13888
1PH8288-1xC4x-xxxx	108	13889
1PH8288-1xD0x-xxxx	108	13890
1PH8288-1xD1x-xxxx	108	13891
1PH8288-1xD2x-xxxx	108	11845
1PH8288-1xD3x-xxxx	108	13892
1PH8288-1xD4x-xxxx	108	13893
1PH8288-1xF0x-xxxx	108	13894
1PH8288-1xF1x-xxxx	108	13895
1PH8288-1xF2x-xxxx	108	11846
1PH8288-1xF3x-xxxx	108	13896
1PH8288-1xF4x-xxxx	108	13897
1PH8288-1xH0x-xxxx	108	13898
1PH8288-1xH1x-xxxx	108	13899
1PH8288-1xH2x-xxxx	108	11847
1PH8288-1xK0x-xxxx	108	14800
1PH8288-1xK1x-xxxx	108	14801
1PH8288-1xK2x-xxxx	108	11848
1PH8288-1xK3x-xxxx	108	14802
1PH8288-1xK4x-xxxx	108	14803
1PH8288-1xU0x-xxxx	108	14804
1PH8288-1xU1x-xxxx	108	14805
1PH8288-1xU2x-xxxx	108	11849
1PH8288-1xU3x-xxxx	108	14806
1PH8288-1xU4x-xxxx	108	14807
1PH8288-1xW0x-xxxx	108	14808
1PH8288-1xW1x-xxxx	108	14809
1PH8288-1xW2x-xxxx	108	11850
1PH8288-1xW3x-xxxx	108	14810
1PH8288-1xW4x-xxxx	108	14811
1PH8350-1xB1x-xxxx	108	14812
1PH8350-1xB4x-xxxx	108	12827
1PH8350-1xC4x-xxxx	108	14873
1PH8350-1xD1x-xxxx	108	14817
1PH8350-1xD4x-xxxx	108	14852

Table A-2 Motor code for induction motors, continued

Order No.	Motor type (p0300)	Motor code (p0301)
1PH8350-1xQ1x-xxxx	108	12825
1PH8350-1xQ4x-xxxx	108	11877
1PH8350-7xB1x-xxxx	108	12806
1PH8350-7xC1x-xxxx	108	12807
1PH8350-7xC4x-xxxx	108	12811
1PH8350-7xD1x-xxxx	108	14838
1PH8350-7xQ1x-xxxx	108	12808
1PH8351-1xB4x-xxxx	108	12826
1PH8351-1xC4x-xxxx	108	14882
1PH8351-1xD4x-xxxx	108	12810
1PH8351-1xQ4x-xxxx	108	14821
1PH8351-7xC4x-xxxx	108	12814
1PH8351-7xD4x-xxxx	108	11878
1PH8352-1xB1x-xxxx	108	11879
1PH8352-1xB4x-xxxx	108	11880
1PH8352-1xC4x-xxxx	108	14850
1PH8352-1xD1x-xxxx	108	12824
1PH8352-1xD4x-xxxx	108	14837
1PH8352-1xH1x-xxxx	108	14839
1PH8352-1xQ4x-xxxx	108	14853
1PH8352-1xU1x-xxxx	108	14851
1PH8352-7xB1x-xxxx	108	12815
1PH8352-7xC4x-xxxx	108	12812
1PH8354-1xB1x-xxxx	108	11851
1PH8354-1xB4x-xxxx	108	11852
1PH8354-1xC1x-xxxx	108	11853
1PH8354-1xC4x-xxxx	108	11854
1PH8354-1xD1x-xxxx	108	11855
1PH8354-1xD4x-xxxx	108	11856
1PH8354-1xQ1x-xxxx	108	11857
1PH8354-1xQ4x-xxxx	108	11858
1PH8354-7xD1x-xxxx	108	12822
1PH8354-7xQ1x-xxxx	108	14844
1PH8356-1xB1x-xxxx	108	11859
1PH8356-1xB4x-xxxx	108	11860
1PH8356-1xC1x-xxxx	108	11861

Table A-2 Motor code for induction motors, continued

Order No.	Motor type (p0300)	Motor code (p0301)
1PH8356-1xC4x-xxxx	108	11862
1PH8356-1xD1x-xxxx	108	11863
1PH8356-1xD4x-xxxx	108	11864
1PH8356-1xK1x-xxxx	108	12819
1PH8356-1xQ1x-xxxx	108	11865
1PH8356-1xQ4x-xxxx	108	11866
1PH8356-1xV1x-xxxx	108	14878
1PH8356-1xV4x-xxxx	108	14879
1PH8356-7xC4x-xxxx	108	12821
1PH8356-7xD1x-xxxx	108	11881
1PH8358-1xB1x-xxxx	108	11867
1PH8358-1xB4x-xxxx	108	11868
1PH8358-1xC1x-xxxx	108	11869
1PH8358-1xC4x-xxxx	108	11870
1PH8358-1xD1x-xxxx	108	11871
1PH8358-1xD4x-xxxx	108	11872
1PH8358-1xH1x-xxxx	108	14834
1PH8358-1xQ1x-xxxx	108	11873
1PH8358-1xQ4x-xxxx	108	11874
1PH8358-1xU1x-xxxx	108	12818
1PH8358-7xD1x-xxxx	108	12809
1PH8358-7xQ4x-xxxx	108	11875

Synchronous motors (Version: 4403900)

Table A-3 Motor code for synchronous motors

Order No.	Motor type (p0300)	Motor code (p0301)
1FK6032-6AK7x-xxxx	236	23601
1FK6033-7AK7x-xxxx	236	23602
1FK6040-6AK7x-xxxx	236	23603
1FK6042-6AF7x-xxxx	236	23604
1FK6043-7AH7x-xxxx	236	23605
1FK6043-7AK7x-xxxx	236	23606
1FK6044-7AF7x-xxxx	236	23607
1FK6044-7AH7x-xxxx	236	23608
1FK6060-6AF7x-xxxx	236	23609

Table A-3 Motor code for synchronous motors, continued

Order No.	Motor type (p0300)	Motor code (p0301)
1FK6061-7AF7x-xxxx	236	23610
1FK6061-7AH7x-xxxx	236	23611
1FK6063-6AF7x-xxxx	236	23612
1FK6064-7AF7x-xxxx	236	23613
1FK6064-7AH7x-xxxx	236	23614
1FK6080-6AF7x-xxxx	236	23615
1FK6082-7AF7x-xxxx	236	23616
1FK6083-6AF7x-xxxx	236	23617
1FK6085-7AF7x-xxxx	236	23618
1FK6100-8AF7x-xxxx	236	23619
1FK6101-8AF7x-xxxx	236	23620
1FK6103-8AF7x-xxxx	236	23621
1FK7011-xAK2x-xxxx	237	23738
1FK7011-xAK7x-xxxx	237	23747
1FK7015-xAK2x-xxxx	237	23739
1FK7015-xAK7x-xxxx	237	23748
1FK7022-xAK2x-xxxx	237	23733
1FK7022-xAK7x-xxxx	237	23726
1FK7024-xAK7x-xxxx	237	23753
1FK7032-xAF2x-xxxx	237	23742
1FK7032-xAK7x-xxxx	237	23727
1FK7033-xAF2x-xxxx	237	23741
1FK7033-xAK7x-xxxx	237	23701
1FK7033-xCF2x-xxxx	237	23784
1FK7033-xCK7x-xxxx	237	23785
1FK7034-xAF2x-xxxx	237	23740
1FK7034-xAK7x-xxxx	237	23732
1FK7040-xAK7x-xxxx	237	23702
1FK7041-xGF7x-xxxx	237	24700
1FK7042-xAC7x-xxxx	237	23749
1FK7042-xAF2x-xxxx	237	23735
1FK7042-xAF7x-xxxx	237	23703
1FK7042-xAK7x-xxxx	237	23704
1FK7042-xBK7x-xxxx	237	23765
1FK7042-xGF7x-xxxx	237	24701
1FK7043-xAF2x-xxxx	237	23743

Table A-3 Motor code for synchronous motors, continued

Order No.	Motor type (p0300)	Motor code (p0301)
1FK7043-xAH7x-xxxx	237	23705
1FK7043-xAK7x-xxxx	237	23706
1FK7043-xCF2x-xxxx	237	23783
1FK7043-xCH7x-xxxx	237	23774
1FK7043-xCK7x-xxxx	237	23775
1FK7044-xAF7x-xxxx	237	23707
1FK7044-xAH7x-xxxx	237	23708
1FK7044-xCF7x-xxxx	237	23776
1FK7044-xCH7x-xxxx	237	23777
1FK7060-xAC7x-xxxx	237	23754
1FK7060-xAF7x-xxxx	237	23709
1FK7060-xAH7x-xxxx	237	23710
1FK7060-xBF7x-xxxx	237	23766
1FK7060-xGF7x-xxxx	237	24702
1FK7061-xAF7x-xxxx	237	23711
1FK7061-xAH7x-xxxx	237	23712
1FK7061-xCF7x-xxxx	237	23786
1FK7061-xCH7x-xxxx	237	23787
1FK7062-xAC7x-xxxx	237	23755
1FK7062-xAF7x-xxxx	237	23767
1FK7062-xAH7x-xxxx	237	23756
1FK7062-xBF7x-xxxx	237	23750
1FK7063-xAC7x-xxxx	237	23757
1FK7063-xAF7x-xxxx	237	23713
1FK7063-xAH7x-xxxx	237	23714
1FK7063-xGC7x-xxxx	237	24703
1FK7064-xAC7x-xxxx	237	23763
1FK7064-xAF7x-xxxx	237	23715
1FK7064-xAH7x-xxxx	237	23716
1FK7064-xCC7x-xxxx	237	23788
1FK7064-xCF7x-xxxx	237	23789
1FK7064-xCH7x-xxxx	237	23790
1FK7080-xAF7x-xxxx	237	23717
1FK7080-xAH7x-xxxx	237	23718
1FK7081-xAC7x-xxxx	237	23758
1FK7081-xAF7x-xxxx	237	23768

Table A-3 Motor code for synchronous motors, continued

Order No.	Motor type (p0300)	Motor code (p0301)
1FK7081-xAH7x-xxxx	237	23759
1FK7081-xBF7x-xxxx	237	23751
1FK7082-xAF7x-xxxx	237	23719
1FK7083-xAC7x-xxxx	237	23760
1FK7083-xAF7x-xxxx	237	23720
1FK7083-xAH7x-xxxx	237	23721
1FK7084-xAC7x-xxxx	237	23769
1FK7084-xAF7x-xxxx	237	23761
1FK7084-xBC7x-xxxx	237	23752
1FK7084-xBF7x-xxxx	237	23772
1FK7085-xAC7x-xxxx	237	23764
1FK7085-xAF7x-xxxx	237	23722
1FK7085-xCC7x-xxxx	237	23791
1FK7085-xCF7x-xxxx	237	23792
1FK7086-xAA7x-xxxx	237	23737
1FK7086-xAC7x-xxxx	237	23744
1FK7086-xAF7x-xxxx	237	23731
1FK7086-xCC7x-xxxx	237	23793
1FK7086-xCF7x-xxxx	237	23794
1FK7086-xSF7x-xxxx	237	23730
1FK7100-xAC7x-xxxx	237	23762
1FK7100-xAF7x-xxxx	237	23723
1FK7100-xBC7x-xxxx	237	24708
1FK7100-xBF7x-xxxx	237	24709
1FK7100-xFC7x-xxxx	237	24704
1FK7101-xAC7x-xxxx	237	23745
1FK7101-xAF7x-xxxx	237	23724
1FK7101-xBC7x-xxxx	237	24710
1FK7101-xBF7x-xxxx	237	24711
1FK7101-xFC7x-xxxx	237	24705
1FK7103-xAC7x-xxxx	237	23746
1FK7103-xAF7x-xxxx	237	23725
1FK7103-xBC7x-xxxx	237	24712
1FK7103-xBF7x-xxxx	237	24713
1FK7103-xFB7x-xxxx	237	24706
1FK7105-xAC7x-xxxx	237	23728

Table A-3 Motor code for synchronous motors, continued

Order No.	Motor type (p0300)	Motor code (p0301)
1FK7105-xAF7x-xxxx	237	23729
1FK7105-xBC7x-xxxx	237	24714
1FK7105-xBF7x-xxxx	237	24715
1FK7105-xFB7x-xxxx	237	24707
1FT6021-xAK7x-xxxx	206	20601
1FT6024-xAK7x-xxxx	206	20602
1FT6031-xAK7x-xxxx	206	20603
1FT6034-xAK7x-xxxx	206	20604
1FT6041-xAF7x-xxxx	206	20605
1FT6041-xAK7x-xxxx	206	20606
1FT6044-xAF7x-xxxx	206	20607
1FT6044-xAK7x-xxxx	206	20608
1FT6061-xAC7x-xxxx	206	20609
1FT6061-xAF7x-xxxx	206	20610
1FT6061-xAH7x-xxxx	206	20611
1FT6061-xAK7x-xxxx	206	20612
1FT6062-xAC7x-xxxx	206	20613
1FT6062-xAF7x-xxxx	206	20614
1FT6062-xAH7x-xxxx	206	20615
1FT6062-xAK7x-xxxx	206	20616
1FT6062-xWF7x-xxxx	206	22601
1FT6062-xWH7x-xxxx	206	22602
1FT6062-xWK7x-xxxx	206	22603
1FT6064-xAC7x-xxxx	206	20617
1FT6064-xAF7x-xxxx	206	20618
1FT6064-xAH7x-xxxx	206	20619
1FT6064-xAK7x-xxxx	206	20620
1FT6064-xWF7x-xxxx	206	22604
1FT6064-xWH7x-xxxx	206	22605
1FT6064-xWK7x-xxxx	206	22606
1FT6081-xAC7x-xxxx	206	20621
1FT6081-xAF7x-xxxx	206	20622
1FT6081-xAH7x-xxxx	206	20623
1FT6081-xAK7x-xxxx	206	20624
1FT6082-xAC7x-xxxx	206	20625
1FT6082-xAF7x-xxxx	206	20626

Table A-3 Motor code for synchronous motors, continued

Order No.	Motor type (p0300)	Motor code (p0301)
1FT6082-xAH7x-xxxx	206	20627
1FT6082-xAK7x-xxxx	206	20628
1FT6082-xWH7x-xxxx	206	22630
1FT6084-xAC7x-xxxx	206	20629
1FT6084-xAF7x-xxxx	206	20630
1FT6084-xAH7x-xxxx	206	20631
1FT6084-xAK7x-xxxx	206	20632
1FT6084-xSF7x-xxxx	206	21601
1FT6084-xSH7x-xxxx	206	21602
1FT6084-xSK7x-xxxx	206	21603
1FT6084-xWF7x-xxxx	206	22607
1FT6084-xWH7x-xxxx	206	22608
1FT6084-xWK7x-xxxx	206	22609
1FT6086-xAC7x-xxxx	206	20633
1FT6086-xAF7x-xxxx	206	20634
1FT6086-xAH7x-xxxx	206	20635
1FT6086-xSF7x-xxxx	206	21604
1FT6086-xSG7x-xxxx	206	21626
1FT6086-xSH7x-xxxx	206	21605
1FT6086-xSK7x-xxxx	206	21606
1FT6086-xWF7x-xxxx	206	22610
1FT6086-xWH7x-xxxx	206	22611
1FT6086-xWK7x-xxxx	206	22612
1FT6102-xAB7x-xxxx	206	20636
1FT6102-xAC7x-xxxx	206	20637
1FT6102-xAF7x-xxxx	206	20638
1FT6102-xAH7x-xxxx	206	20639
1FT6105-xAB7x-xxxx	206	20640
1FT6105-xAC7x-xxxx	206	20641
1FT6105-xAF7x-xxxx	206	20642
1FT6105-xSB7x-xxxx	206	21607
1FT6105-xSC7x-xxxx	206	21608
1FT6105-xSF7x-xxxx	206	21609
1FT6105-xSH7x-xxxx	206	21610
1FT6105-xWC7x-xxxx	206	22613
1FT6105-xWF7x-xxxx	206	22614

Table A-3 Motor code for synchronous motors, continued

Order No.	Motor type (p0300)	Motor code (p0301)
1FT6108-xAB7x-xxxx	206	20643
1FT6108-xAC7x-xxxx	206	20644
1FT6108-xAF7x-xxxx	206	20645
1FT6108-xSB7x-xxxx	206	21611
1FT6108-xSC7x-xxxx	206	21612
1FT6108-xSF7x-xxxx	206	21613
1FT6108-xWB7x-xxxx	206	22615
1FT6108-xWC7x-xxxx	206	22616
1FT6108-xWF7x-xxxx	206	22617
1FT6132-xAB7x-xxxx	206	20646
1FT6132-xAC7x-xxxx	206	20647
1FT6132-xAF7x-xxxx	206	20648
1FT6132-xSB7x-xxxx	206	21614
1FT6132-xSC7x-xxxx	206	21615
1FT6132-xSF7x-xxxx	206	21616
1FT6132-xWB7x-xxxx	206	22618
1FT6132-xWD7x-xxxx	206	22619
1FT6134-xAB7x-xxxx	206	20649
1FT6134-xAC7x-xxxx	206	20650
1FT6134-xSB7x-xxxx	206	21617
1FT6134-xSC7x-xxxx	206	21618
1FT6134-xSF7x-xxxx	206	21619
1FT6134-xWB7x-xxxx	206	22620
1FT6134-xWD7x-xxxx	206	22621
1FT6136-xAB7x-xxxx	206	20651
1FT6136-xAC7x-xxxx	206	20652
1FT6136-xSB7x-xxxx	206	21620
1FT6136-xSC7x-xxxx	206	21621
1FT6136-xSF7x-xxxx	206	21622
1FT6136-xWB7x-xxxx	206	22622
1FT6136-xWD7x-xxxx	206	22623
1FT6138-xWB7x-xxxx	206	22624
1FT6138-xWD7x-xxxx	206	22625
1FT6163-xSB7x-xxxx	206	21623
1FT6163-xSD7x-xxxx	206	21624
1FT6163-xWB7x-xxxx	206	22626

Table A-3 Motor code for synchronous motors, continued

Order No.	Motor type (p0300)	Motor code (p0301)
1FT6163-xWD7x-xxxx	206	22627
1FT6168-xSB7x-xxxx	206	21625
1FT6168-xWB7x-xxxx	206	22628
1FT7034-xAK7x-xxxx	207	20740
1FT7036-xAK7x-xxxx	207	20741
1FT7042-xAF7x-xxxx	207	20701
1FT7042-xAK7x-xxxx	207	20702
1FT7044-xAF7x-xxxx	207	20703
1FT7044-xAK7x-xxxx	207	20704
1FT7046-xAF7x-xxxx	207	20705
1FT7046-xAH7x-xxxx	207	20732
1FT7046-xAK7x-xxxx	207	20706
1FT7062-xAF7x-xxxx	207	20716
1FT7062-xAK7x-xxxx	207	20717
1FT7062-xWF7x-xxxx	207	20745
1FT7062-xWK7x-xxxx	207	20746
1FT7064-xAF7x-xxxx	207	20720
1FT7064-xAK7x-xxxx	207	20721
1FT7064-xWF7x-xxxx	207	20747
1FT7064-xWK7x-xxxx	207	20748
1FT7065-xSF7x-xxxx	207	20781
1FT7065-xSH7x-xxxx	207	20782
1FT7065-xWF7x-xxxx	207	20770
1FT7065-xWH7x-xxxx	207	20771
1FT7066-xAF7x-xxxx	207	20722
1FT7066-xAH7x-xxxx	207	20733
1FT7066-xWF7x-xxxx	207	20749
1FT7066-xWH7x-xxxx	207	20750
1FT7067-xSF7x-xxxx	207	20783
1FT7067-xSH7x-xxxx	207	20784
1FT7067-xWF7x-xxxx	207	20772
1FT7067-xWH7x-xxxx	207	20773
1FT7068-xAF7x-xxxx	207	20725
1FT7068-xWF7x-xxxx	207	20751
1FT7082-xAC7x-xxxx	207	20734
1FT7082-xAF7x-xxxx	207	20709

Table A-3 Motor code for synchronous motors, continued

Order No.	Motor type (p0300)	Motor code (p0301)
1FT7082-xAH7x-xxxx	207	20707
1FT7082-xWC7x-xxxx	207	20752
1FT7082-xWF7x-xxxx	207	20753
1FT7082-xWH7x-xxxx	207	20754
1FT7084-xAC7x-xxxx	207	20735
1FT7084-xAF7x-xxxx	207	20711
1FT7084-xAH7x-xxxx	207	20712
1FT7084-xSC7x-xxxx	207	20789
1FT7084-xSF7x-xxxx	207	20790
1FT7084-xSH7x-xxxx	207	20791
1FT7084-xWC7x-xxxx	207	20755
1FT7084-xWF7x-xxxx	207	20756
1FT7084-xWH7x-xxxx	207	20757
1FT7085-xSF7x-xxxx	207	20774
1FT7085-xSH7x-xxxx	207	20775
1FT7085-xWF7x-xxxx	207	20776
1FT7085-xWH7x-xxxx	207	20777
1FT7086-xAC7x-xxxx	207	20736
1FT7086-xAF7x-xxxx	207	20714
1FT7086-xAH7x-xxxx	207	20715
1FT7086-xSC7x-xxxx	207	20792
1FT7086-xSF7x-xxxx	207	20793
1FT7086-xSH7x-xxxx	207	20794
1FT7086-xWC7x-xxxx	207	20758
1FT7086-xWF7x-xxxx	207	20759
1FT7086-xWH7x-xxxx	207	20760
1FT7087-xSF7x-xxxx	207	20778
1FT7087-xSH7x-xxxx	207	20779
1FT7087-xWF7x-xxxx	207	20769
1FT7087-xWH7x-xxxx	207	20780
1FT7102-xAB7x-xxxx	207	20726
1FT7102-xAC7x-xxxx	207	20737
1FT7102-xAF7x-xxxx	207	20727
1FT7102-xWB7x-xxxx	207	20761
1FT7102-xWC7x-xxxx	207	20762
1FT7102-xWF7x-xxxx	207	20763

Table A-3 Motor code for synchronous motors, continued

Order No.	Motor type (p0300)	Motor code (p0301)
1FT7105-xAB7x-xxxx	207	20728
1FT7105-xAC7x-xxxx	207	20738
1FT7105-xAF7x-xxxx	207	20729
1FT7105-xSC7x-xxxx	207	20785
1FT7105-xSF7x-xxxx	207	20786
1FT7105-xWB7x-xxxx	207	20744
1FT7105-xWC7x-xxxx	207	20764
1FT7105-xWF7x-xxxx	207	20765
1FT7108-xAB7x-xxxx	207	20730
1FT7108-xAC7x-xxxx	207	20739
1FT7108-xAF7x-xxxx	207	20731
1FT7108-xSC7x-xxxx	207	20787
1FT7108-xSF7x-xxxx	207	20788
1FT7108-xWB7x-xxxx	207	20742
1FT7108-xWC7x-xxxx	207	20766
1FT7108-xWF7x-xxxx	207	20767
1PH8131-2xF0x-xxxx	200	20001
1PH8131-2xF1x-xxxx	200	20002
1PH8131-2xF2x-xxxx	200	20003
1PH8131-2xL0x-xxxx	200	20004
1PH8131-2xL1x-xxxx	200	20005
1PH8131-2xL2x-xxxx	200	20006
1PH8133-2xF0x-xxxx	200	20007
1PH8133-2xF1x-xxxx	200	20008
1PH8133-2xF2x-xxxx	200	20009
1PH8133-2xG2x-xxxx	200	20010
1PH8133-2xL0x-xxxx	200	20011
1PH8133-2xL1x-xxxx	200	20012
1PH8135-2xF0x-xxxx	200	20013
1PH8135-2xF1x-xxxx	200	20014
1PH8135-2xF2x-xxxx	200	20015
1PH8135-2xG0x-xxxx	200	20016
1PH8135-2xG1x-xxxx	200	20017
1PH8135-2xG2x-xxxx	200	20018
1PH8137-2xF0x-xxxx	200	20019
1PH8137-2xF1x-xxxx	200	20020

Table A-3 Motor code for synchronous motors, continued

Order No.	Motor type (p0300)	Motor code (p0301)
1PH8137-2xF2x-xxxx	200	20021
1PH8137-2xG2x-xxxx	200	20022
1PH8137-2xL0x-xxxx	200	20023
1PH8137-2xL1x-xxxx	200	20024
1PH8137-2xM0x-xxxx	200	20025
1PH8137-2xM1x-xxxx	200	20026
1PH8138-2xF2x-xxxx	200	20027
1PH8138-2xG2x-xxxx	200	20028
1PH8164-2xF2x-xxxx	200	20049
1PH8164-2xG2x-xxxx	200	20050
1PH8164-2xL2x-xxxx	200	20051
1PH8164-2xM2x-xxxx	200	20052
1PH8165-2xF0x-xxxx	200	20053
1PH8165-2xF1x-xxxx	200	20054
1PH8165-2xL0x-xxxx	200	20055
1PH8165-2xL1x-xxxx	200	20056
1PH8166-2xF2x-xxxx	200	20057
1PH8166-2xG2x-xxxx	200	20058
1PH8166-2xL2x-xxxx	200	20059
1PH8166-2xM2x-xxxx	200	20060
1PH8167-2xF0x-xxxx	200	20061
1PH8167-2xF1x-xxxx	200	20062
1PH8167-2xG0x-xxxx	200	20063
1PH8167-2xG1x-xxxx	200	20064
1PH8167-2xL0x-xxxx	200	20068
1PH8167-2xL1x-xxxx	200	20069
1PH8168-2xF2x-xxxx	200	20065
1PH8168-2xG2x-xxxx	200	20066
1PH8168-2xL2x-xxxx	200	20067
1PH8184-2xC0x-xxxx	200	20087
1PH8184-2xC1x-xxxx	200	20088
1PH8184-2xC2x-xxxx	200	20029
1PH8184-2xD0x-xxxx	200	20089
1PH8184-2xD1x-xxxx	200	20090
1PH8184-2xD2x-xxxx	200	20030
1PH8184-2xF0x-xxxx	200	20091

Table A-3 Motor code for synchronous motors, continued

Order No.	Motor type (p0300)	Motor code (p0301)
1PH8184-2xF1x-xxxx	200	20092
1PH8184-2xF2x-xxxx	200	20031
1PH8184-2xL2x-xxxx	200	20032
1PH8186-2xC0x-xxxx	200	20093
1PH8186-2xC1x-xxxx	200	20094
1PH8186-2xC2x-xxxx	200	20033
1PH8186-2xD0x-xxxx	200	20095
1PH8186-2xD1x-xxxx	200	20096
1PH8186-2xD2x-xxxx	200	20034
1PH8186-2xF0x-xxxx	200	20097
1PH8186-2xF1x-xxxx	200	20098
1PH8186-2xF2x-xxxx	200	20035
1PH8186-2xL2x-xxxx	200	20036
1PH8224-2xC0x-xxxx	200	21001
1PH8224-2xC1x-xxxx	200	21002
1PH8224-2xC2x-xxxx	200	20037
1PH8224-2xD0x-xxxx	200	20071
1PH8224-2xD1x-xxxx	200	20072
1PH8224-2xD2x-xxxx	200	20038
1PH8224-2xF0x-xxxx	200	20073
1PH8224-2xF1x-xxxx	200	20074
1PH8224-2xF2x-xxxx	200	20039
1PH8224-2xL2x-xxxx	200	20040
1PH8226-2xC0x-xxxx	200	20075
1PH8226-2xC1x-xxxx	200	20076
1PH8226-2xC2x-xxxx	200	20041
1PH8226-2xD0x-xxxx	200	20077
1PH8226-2xD1x-xxxx	200	20078
1PH8226-2xD2x-xxxx	200	20042
1PH8226-2xF0x-xxxx	200	20079
1PH8226-2xF1x-xxxx	200	20080
1PH8226-2xF2x-xxxx	200	20043
1PH8226-2xL2x-xxxx	200	20044
1PH8228-2xC0x-xxxx	200	20081
1PH8228-2xC1x-xxxx	200	20082
1PH8228-2XC2x-xxxx	200	20045

Table A-3 Motor code for synchronous motors, continued

Order No.	Motor type (p0300)	Motor code (p0301)
1PH8228-2xD0x-xxxx	200	20083
1PH8228-2xD1x-xxxx	200	20084
1PH8228-2xD2x-xxxx	200	20046
1PH8228-2xF0x-xxxx	200	20085
1PH8228-2xF1x-xxxx	200	20086
1PH8228-2xF2x-xxxx	200	20047
1PH8228-2xL2x-xxxx	200	20048

A.2.2 Encoder code

1FK6 encoders

Table A-4 Encoder code for 1FK6 encoders

Order No.	Encoder code (p0400)	Remark
1FK6xxx-xxxxx-xAxx	2001	-
1FK6xxx-xxxxx-xExx	2051	-
1FK6xxx-xxxxx-xGxx	2052	-
1FK6xxx-xxxxx-xHxx	2053	-
1FK6xxx-xxxxx-xJxx	2054	-
1FK6xxx-xxxxx-xSxx	1002 1003 1004	4p (2-speed) 6p (3-speed) 8p (4-speed) The pole number of the resolver corresponds to the pole number of the motor (see catalog).
1FK6xxx-xxxxx-xTxx	1001	-

1FK7 encoders

Table A-5 Encoder code for 1FK7 encoders

Order No.	Encoder code (p0400)	Remark
1FK7xxx-xxxxx-xAxx	2001	-
1FK7xxx-xxxxx-xExx	2051	-
1FK7xxx-xxxxx-xGxx	2052	-
1FK7xxx-xxxxx-xHxx	2053	-
1FK7xxx-xxxxx-xJxx	2054	-
1FK7xxx-xxxxx-xSxx	1002 1003 1004	4p (2-speed) 6p (3-speed) 8p (4-speed) The pole number of the resolver corresponds to the pole number of the motor (see catalog).
1FK7xxx-xxxxx-xTxx	1001	-

1FT6 encoders

Table A-6 Encoder code for 1FT6 encoders

Order No.	Encoder code (p0400)	Remark
1FT6xxx-xxxxx-xAxx	2001	-
1FT6xxx-xxxxx-xExx	2051	-
1FT6xxx-xxxxx-xHxx	2053	-
1FT6xxx-4xxxx-xSxx	1002	4p (2-speed)
1FT6xxx-6xxxx-xSxx	1003	6p (3-speed)
1FT6xxx-8xxxx-xSxx	1004	8p (4-speed)
1FT6xxx-xxxxx-xTxx	1001	-

1PH4 encoders

Table A-7 Encoder code for 1PH4 encoders

Order No.	Encoder code (p0400)	Remark
1PH4xxx-xNxxx-xxxx	2002	-

1PH7 encoders

Table A-8 Encoder code for 1PH7 encoders

Order No.	Encoder code (p0400)	Remark
1PH7xxx-xExxx-xxxx	2051	-
1PH7xxx-xHxxx-xxxx	3002	-
1PH7xxx-xJxxx-xxxx	3003	-
1PH7xxx-xMxxx-xxxx	2001	-
1PH7xxx-xNxxx-xxxx	2002	-
1PH7xxx-xRxxx-xxxx	1001	-

A.3 List of abbreviations

Note

The following list of abbreviations includes all abbreviations and their meanings used in the entire SINAMICS family of drives.

Abbreviation	Source of abbreviation	Meaning
A		
A…	Alarm	Alarm
AC	Alternating Current	Alternating current
ADC	Analog Digital Converter	Analog-digital converter
AI	Analog Input	Analog input
AIM	Active Interface Module	Active Interface Module
ALM	Active Line Module	Active Line Module
AO	Analog Output	Analog output
AOP	Advanced Operator Panel	Advanced Operator Panel
APC	Advanced Positioning Control	Advanced Positioning Control
AR	Automatic Restart	Automatic restart
ASC	Armature Short-Circuit	Armature short-circuit
ASCII	American Standard Code for Information Interchange	American standard code for information interchange
AS-i	AS-Interface (Actuator Sensor Interface)	AS-interface (open bus system in automation technology)
ASM	Asynchronmotor	Induction motor
B		
BB	Betriebsbedingung	Operating condition
BERO	-	Proximity switch
BI	Binector Input	Binector input
BIA	Berufsgenossenschaftliches Institut für Arbeitssicherheit	BG-Institute for Occupational Safety and Health
BICO	Binector Connector Technology	Binector connector technology
BLM	Basic Line Module	Basic Line Module
BO	Binector Output	Binector output
BOP	Basic Operator Panel	Basic Operator Panel
C		
C	Capacitance	Capacitance
C…	-	Safety message
CAN	Controller Area Network	Serial bus system
CBC	Communication Board CAN	Communication Board CAN
CBE	Communication Board Ethernet	Communication Board PROFINET (Ethernet)
CD	Compact Disk	Compact disk
CDS	Command Data Set	Command data set
CF card	CompactFlash card	CompactFlash card
CI	Connector Input	Connector input

Abbreviation	Source of abbreviation	Meaning
CLC	Clearance Control	Clearance control
CNC	Computer Numerical Control	Computer-supported numerical control
CO	Connector Output	Connector output
CO/BO	Connector Output / Binector Output	Connector/binector output
COB ID	CAN Object Identification	CAN object identification
CoL	Certificate of License	Certificate of License
COM	Common contact of a changeover relay	Center contact on a changeover contact
COMM	Commissioning	Commissioning
CP	Communications Processor	Communications processor
CPU	Central Processing Unit	Central processing unit
CRC	Cyclic Redundancy Check	Cyclic redundancy check
CSM	Control Supply Module	Control Supply Module
CU	Control Unit	Control Unit
CUA	Control Unit Adapter	Control Unit Adapter
CUD	Control Unit DC MASTER	Control Unit DC MASTER
D		
DAC	Digital Analog Converter	Digital-analog converter
DC	Direct Current	Direct current
DCB	Drive Control Block	Drive Control Block
DCBRK	DC Brake	DC braking
DCC	Drive Control Chart	Drive Control Chart
DCN	Direct Current Negative	Direct current negative
DCP	Direct Current Positive	Direct current positive
DDS	Drive Data Set	Drive data set
DI	Digital Input	Digital input
DI/DO	Digital Input / Digital Output	Bidirectional digital input/output
DMC	DRIVE-CLiQ Hub Module Cabinet	DRIVE-CLiQ Hub Module Cabinet
DME	DRIVE-CLiQ Hub Module External	DRIVE-CLiQ Hub Module External
DMM	Double Motor Module	Double Motor Module
DO	Digital Output	Digital output
DO	Drive Object	Drive object
DP	Decentralized Peripherals	Distributed peripherals
DPRAM	Dual Ported Random Access Memory	Dual-port random access memory
DQ	DRIVE-CLiQ	DRIVE-CLiQ
DRAM	Dynamic Random Access Memory	Dynamic random access memory
DRIVE-CLiQ	Drive Component Link with IQ	Drive Component Link with IQ
DSC	Dynamic Servo Control	Dynamic Servo Control
DTC	Digital Time Clock	Timer
E		
EASC	External Armature Short-Circuit	External armature short-circuit
EDS	Encoder data set	Encoder data set
EEPROM	Electrically Erasable Programmable Read-Only Memory	Electrically Erasable Programmable Read-Only-Memory

Abbreviation	Source of abbreviation	Meaning
EGB	Elektrostatisch gefährdete Baugruppen	Electrostatic sensitive devices
ELCB	Earth Leakage Circuit-Breaker	Residual current operated circuit breaker
ELP	Earth Leakage Protection	Ground-fault monitoring
EMC	Electromagnetic Compatibility	Electromagnetic compatibility
EMF	Electromotive Force	Electromotive force
EMK	Elektromotorische Kraft	Electromotive force
EMV	Elektromagnetische Verträglichkeit	Electromagnetic compatibility
EN	Europäische Norm	European standard
EnDat	Encoder-Data-Interface	Encoder interface
EP	Enable Pulses	Enable pulses
EPOS	Einfachpositionierer	Basic positioner
ES	Engineering System	Engineering system
ESB	Ersatzschaltbild	Equivalent circuit diagram
ESD	Electrostatic Sensitive Devices	Electrostatic sensitive devices
ESM	Essential Service Mode	Essential service mode
ESR	Extended Stop and Retract	Extended stop and retract
F		
F…	Fault	Fault
FAQ	Frequently Asked Questions	Frequently asked questions
FBLOCKS	Free Blocks	Free function blocks
FCC	Function Control Chart	Function control chart
FCC	Flux Current Control	Flux current control
FD	Function Diagram	Function diagram
F-DI	Fail-safe Digital Input	Fail-safe digital input
F-DO	Fail-safe Digital Output	Fail-safe digital output
FEM	Fremderregter Synchronmotor	Separately excited synchronous motor
FEPROM	Flash EPROM	Non-volatile write and read memory
FG	Function Generator	Function generator
FI	-	Residual current
FOC	Fiber-Optic Cable	Fiber-optic cable
FP	Funktionsplan	Function diagram
FPGA	Field Programmable Gate Array	Field programmable gate array
FW	Firmware	Firmware
G		
GB	Gigabyte	Gigabyte
GC	Global Control	Global control telegram (broadcast telegram)
GND	Ground	Reference potential for all signal and operating voltages, usually defined as 0 V (also referred to as M)
GSD	Generic Station Description	Generic Station Description: Describes the features of a PROFIBUS slave
GSV	Gate Supply Voltage	Gate supply voltage
GUID	Globally Unique Identifier	Globally unique identifier

Abbreviation	Source of abbreviation	Meaning
H		
HF	High Frequency	High frequency
HFD	Hochfrequenzdrossel	High-frequency reactor
HLA	Hydraulic Linear Actuator	Hydraulic linear drive
HLG	Hochlaufgeber	Ramp-function generator
HM	Hydraulic Module	Hydraulic Module
HMI	Human Machine Interface	Human machine interface
HTL	High-Threshold Logic	Logic with high fault threshold
HW	Hardware	Hardware
I		
i. V.	In Vorbereitung	Under development: This property is currently not available
I/O	Input/Output	Input/output
I2C	Inter-Integrated Circuit	Internal serial data bus
IASC	Internal Armature Short-Circuit	Internal armature short-circuit
IBN	Inbetriebnahme	Commissioning
ID	Identifier	Identification
IE	Industrial Ethernet	Industrial Ethernet
IEC	International Electrotechnical Commission	International Electrotechnical Commission
IF	Interface	Interface
IGBT	Insulated Gate Bipolar Transistor	Bipolar transistor with insulated control electrode
IGCT	Integrated Gate-Controlled Thyristor	Semiconductor power switch with integrated control electrode
IL	Impulslöschung	Pulse suppression
IP	Internet Protocol	Internet protocol
IPO	Interpolator	Interpolator
IT	Isolé Terre	Non-grounded three-phase line supply
IVP	Internal Voltage Protection	Internal voltage protection
J		
JOG	Jogging	Jogging
K		
KDV	Kreuzweiser Datenvergleich	Data cross-check
KHP	Know-How Protection	Know-how protection
KIP	Kinetische Pufferung	Kinetic buffering
Kp	-	Proportional gain
KTY	-	Special temperature sensor
L		
L	-	Symbol for inductance
LED	Light Emitting Diode	Light-emitting diode
LIN	Linear motor	Linear motor
LR	Lageregler	Position controller
LSB	Least Significant Bit	Least significant bit
LSC	Line-Side Converter	Line-side converter

Abbreviation	Source of abbreviation	Meaning
LSS	Line-Side Switch	Line-side switch
LU	Length Unit	Length unit
LWL	Lichtwellenleiter	Fiber-optic cables
M		
M	-	Symbol for torque
M	Mass	Reference potential for all signal and operating voltages, usually defined as 0 V (also referred to as GND)
MB	Megabyte	Megabyte
MCC	Motion Control Chart	Motion Control Chart
MDI	Manual Data Input	Manual data input
MDS	Motor Data Set	Motor data set
MLFB	Maschinenlesbare Fabrikatebezeichnung	Machine-readable product code
MM	Motor Module	Motor Module
MMC	Man-Machine Communication	Man-machine communication
MMC	Micro Memory Card	Micro memory card
MSB	Most Significant Bit	Most significant bit
MSC	Motor-Side Converter	Motor-side converter
MSCY_C1	Master Slave Cycle Class 1	Cyclic communication between master (class 1) and slave
MSR	Motorstromrichter	Motor-side converter
MT	Messtaster	Probe
N		
N. C.	Not Connected	Not connected
N…	No Report	No report or internal message
NAMUR	Normenarbeitsgemeinschaft für Mess- und Regeltechnik in der chemischen Industrie	Standardization association for measurement and control in chemical industries
NC	Normally Closed (contact)	NC contact
NC	Numerical Control	Numerical control
NEMA	National Electrical Manufacturers Association	Standardization body in the US
NM	Nullmarke	Zero mark
NO	Normally Open (contact)	NO contact
NSR	Netzstromrichter	Line-side converter
NVRAM	Non-Volatile Random Access Memory	Non-volatile read/write memory
O		
OA	Open Architecture	Software component (technology package) which provides additional functions for the SINAMICS drive system
OAIF	Open Architecture Interface	Version of the SINAMICS firmware from which the OA-application can be used
OASP	Open Architecture Support Package	Expands the STARTER commissioning tool by the corresponding OA-application
OC	Operating Condition	Operating condition
OEM	Original Equipment Manufacturer	Original equipment manufacturer

Abbreviation	Source of abbreviation	Meaning
OLP	Optical Link Plug	Bus connector for fiber-optic cable
OMI	Option Module Interface	Option Module Interface
P		
p…	-	Setting parameters
P1	Processor 1	CPU 1
P2	Processor 2	CPU 2
PB	PROFIBUS	PROFIBUS
PcCtrl	PC Control	Master control
PD	PROFIdrive	PROFIdrive
PDS	Power unit Data Set	Power unit data set
PE	Protective Earth	Protective ground
PELV	Protective Extra-Low Voltage	Safety extra-low voltage
PEM	Permanenterregter Synchronmotor	Permanent-magnet synchronous motor
PG	Programmiergerät	Programming device
PI	Proportional Integral	Proportional integral
PID	Proportional Integral Differential	Proportional integral differential
PLC	Programmable Logic Controller	Programmable logic controller
PLL	Phase-Locked Loop	Phase-locked loop
PM	Power Module	Power Module
PN	PROFINET	PROFINET
PNO	PROFIBUS Nutzerorganisation	PROFIBUS user organization
PPI	Point-to-Point Interface	Point-to-point interface
PRBS	Pseudo Random Binary Signal	White noise
PROFIBUS	Process Field Bus	Serial data bus
PS	Power Supply	Power supply
PSA	Power Stack Adapter	Power Stack Adapter
PTC	Positive Temperature Coefficient	Positive temperature coefficient
PTP	Point-To-Point	Point-to-point
PWM	Pulse Width Modulation	Pulse width modulation
PZD	Prozessdaten	Process data
Q		
R		
r …	-	Display parameters (read only)
RAM	Random Access Memory	Read/write memory
RCCB	Residual Current Circuit Breaker	Residual current operated circuit breaker
RCD	Residual Current Device	Residual current operated circuit breaker
RCM	Residual Current Monitor	Residual current monitor
RFG	Ramp-Function Generator	Ramp-function generator
RJ45	Registered Jack 45	Term for an 8-pin socket system for data transmission with shielded or non-shielded multi-wire copper cables
RKA	Rückkühlanlage	Cooling unit
RLM	Renewable Line Module	Renewable Line Module

Abbreviation	Source of abbreviation	Meaning
RO	Read Only	Read only
ROM	Read-Only Memory	Read-only memory
RPDO	Receive Process Data Object	Receive process data object
RS 232	Recommended Standard 232	Interface standard for cable-connected serial data transmission between a sender and receiver (also known as EIA232)
RS485	Recommended Standard 485	Interface standard for a cable-connected differential, parallel, and/or serial bus system (data transmission between a number of senders and receivers, also known as EIA485)
RTC	Real-Time Clock	Real-time clock
RZA	Raumzeigerapproximation	Space vector approximation
S		
S1	-	Continuous duty
S3	-	Intermittent duty
SAM	Safe Acceleration Monitor	Safe acceleration monitoring
SBC	Safe Brake Control	Safe brake control
SBH	Sicherer Betriebshalt	Safe operating stop
SBR	Safe Brake Ramp	Safe brake ramp monitoring
SBT	Safe Brake Test	Safe brake test
SCA	Safe Cam	Safe cam
SD Card	SecureDigital Card	Secure digital memory card
SDI	Safe Direction	Safe motion direction
SE	Sicherer Software-Endschalter	Safe software limit switches
SG	Sicher reduzierte Geschwindigkeit	Safely-limited speed
SGA	Sicherheitsgerichteter Ausgang	Safety-related output
SGE	Sicherheitsgerichteter Eingang	Safety-related input
SH	Sicherer Halt	Safe standstill
SI	Safety Integrated	Safety Integrated
SIL	Safety Integrity Level	Safety integrity level
SLM	Smart Line Module	Smart Line Module
SLP	Safely-Limited Position	Safely limited position
SLS	Safely-Limited Speed	Safely-limited speed
SLVC	Sensorless Vector Control	Vector control without encoder
SM	Sensor Module	Sensor Module
SMC	Sensor Module Cabinet	Sensor Module Cabinet
SME	Sensor Module External	Sensor Module External
SMI	Sensor Module Integrated	SINAMICS Sensor Module Integrated
SMM	Single Motor Module	Single Motor Module
SN	Sicherer Software-Nocken	Safe software cam
SOS	Safe Operating Stop	Safe operating stop
SP	Service Pack	Service pack
SP	Safe Position	Safe position
SPC	Setpoint Channel	Setpoint channel

Abbreviation	Source of abbreviation	Meaning
SPI	Serial Peripheral Interface	Serial peripheral interface
SPS	Speicherprogrammierbare Steuerung	Programmable Logic Controller
SS1	Safe Stop 1	Safe stop 1 (monitored for time and ramp)
SS2	Safe Stop 2	Safe stop 2
SSI	Synchronous Serial Interface	Synchronous serial interface
SSM	Safe Speed Monitor	Safe feedback from speed monitor
SSP	SINAMICS Support Package	SINAMICS support package
STO	Safe Torque Off	Safe torque off
STW	Steuerwort	Control word
T		
TB	Terminal Board	Terminal Board
TIA	Totally Integrated Automation	Totally Integrated Automation
TM	Terminal Module	Terminal Module
TN	Terre Neutre	Grounded three-phase line supply
Tn	-	Integral-action time
TPDO	Transmit Process Data Object	Transmit process data object
TT	Terre Terre	Grounded three-phase line supply
TTL	Transistor-Transistor Logic	Transistor-transistor logic
Tv	-	Derivative action time
U		
UL	Underwriters Laboratories Inc.	Underwriters Laboratories Inc.
UPS	Uninterruptible Power Supply	Uninterruptible power supply
USV	Unterbrechungsfreie Stromversorgung	Uninterruptible power supply
UTC	Universal Time Coordinated	Universal time coordinated
V		
VC	Vector Control	Vector control
Vdc	-	DC-link voltage
VdcN	-	Partial DC-link voltage, negative
VdcP	-	Partial DC-link voltage, positive
VDE	Verband Deutscher Elektrotechniker	Association of German Electrical Engineers
VDI	Verein Deutscher Ingenieure	Association of German Engineers
VPM	Voltage Protection Module	Voltage Protection Module
Vpp	Volt peak to peak	Volt peak-to-peak
VSM	Voltage Sensing Module	Voltage Sensing Module
W		
WEA	Wiedereinschaltautomatik	Automatic restart
WZM	Werkzeugmaschine	Machine tool
X		
XML	Extensible Markup Language	Extensible Markup Language (standard language for Web publishing and document management)

Abbreviation	Source of abbreviation	Meaning
Y		
Z		
ZK	Zwischenkreis	DC link
ZM	Zero Mark	Zero mark
SW	Zustandswort	Status word

Index

Numbers

1020
Explanation of the symbols (part 1), 718
1021
Explanation of the symbols (part 2), 719
1022
Explanation of the symbols (part 3), 720
1030
Handling BICO technology, 721
1510
CU305 input/output terminals, 723
1520
PROFIdrive, 724
1530
Internal control/status words, data sets, 725
1550
Setpoint channel, 726
1580
Servo control, encoder evaluation (position, speed, temperature), 727
1590
Servo control, speed control and U/f- control, 728
1610
Servo control, generation of the torque limits, 729
1630
Servo control, current control, 730
1750
Monitoring functions, faults, alarms, 731
2020
CU305 digital inputs, electrically isolated (DI 0 ... DI 3), 733
2021
CU305 digital inputs, electrically isolated (DI 16 ... DI 19), 734
2022
CU305 digital inputs, electrically isolated (DI 20 ... DI 22), 735
2030
CU305 Digital inputs/outputs, bidirectional (DI/DO 8 to DI/DO 9), 736
2031
CU305 Digital inputs/outputs, bidirectional (DI/DO 10 to DI/DO 11), 737
2038
CU305 digital output (DO 16), 738
2040
CU305 Analog input (AI), 739
2410
PROFIBUS (PB) / PROFINET (PN), addresses and diagnostics, 742
2420
Standard telegrams and process data, 743
2422
Manufacturer-specific telegrams and process data, 744
2424
Manufacturer-specific/free telegrams and process data, 745
2439
PZD receive signals interconnection, profile-specific, 746
2440
PZD receive signals interconnection, manufacturer-specific, 747
2442
STW1 control word interconnection (p2038 = 0), 748
2443
STW1 control word interconnection (p2038 = 1), 749
2444
STW2 control word interconnection (p2038 = 0), 750
2445
STW2 control word interconnection (p2038 = 1), 751
2449
PZD send signals interconnection, profile-specific, 752
2450
PZD send signals interconnection, manufacturer-specific, 753
2452
ZSW1 status word interconnection (p2038 = 0), 754
2453
ZSW1 status word interconnection (p2038 = 1), 755
2454
ZSW2 status word interconnection (p2038 = 0), 756
2455
ZSW2 status word interconnection (p2038 = 1), 757
2456
MELDW status word interconnection, 758
2462
POS_STW positioning control word interconnection (r0108.4 = 1), 759
2463
POS_STW1 positioning control word 1 interconnection (r0108.4 = 1), 760

2464
POS_STW2 positioning control word 2 interconnection (r0108.4 = 1), 761
2466
POS_ZSW1 positioning status word 1 interconnection (r0108.4 = 1), 762
2467
POS_ZSW2 positioning status word 2 interconnection (r0108.4 = 1), 763
2468
IF1 receive telegram, free interconnection via BICO (p0922 = 999), 764
2470
IF1 send telegram, free interconnection via BICO (p0922 = 999), 765
2472
IF1 status words, free interconnection, 766
2475
STW1 control word 1 interconnection (r0108.4 = 1), 767
2476
SATZANW block selection interconnection (r0108.4 = 1), 768
2479
ZSW1 status word 1 interconnection (r0108.4 = 1), 769
2480
MDI_MOD-MDI mode interconnection (r0108.4 = 1), 770
2481
IF1 receive telegram, free interconnection via BICO (p0922 = 999), 771
2483
IF1 send telegram, free interconnection via BICO (p0922 = 999), 772
2495
CU_STW1 control word, Control Unit interconnection, 773
2496
CU_ZSW1 status word, Control Unit interconnection, 774
2497
A_DIGITAL interconnection, 775
2498
E_DIGITAL interconnection, 776
2501
Control word sequence control, 778
2503
Status word sequence control, 779
2505
Control word, setpoint channel, 780
2520
Control word, speed controller, 781
2522
Status word, speed controller, 782
2526
Status word closed-loop control, 783
2530
Status word, closed-loop current control, 784
2534
Status word, monitoring functions 1, 785
2536
Status word, monitoring functions 2, 786
2537
Status word, monitoring functions 3, 787
2546
Control word, faults/alarms, 788
2548
Status word, faults/alarms 1 and 2, 789
2610
Sequencer, 791
2634
Missing enable signals, line contactor control, logic operation, 792
2701
Basic brake control (r0108.14 = 0), 794
2704
Extended brake control, zero speed detection (r0108.14 = 1), 795
2707
Extended brake control, open/close brake (r0108.14 = 1), 796
2711
Extended brake control, signal outputs (r0108.14 = 1), 797
2800
Basic Functions, parameter manager, 799
2802
Basic functions, monitoring functions and faults/alarms, 800
2804
Basic Functions, status words, 801
2810
Basic Functions, STO (Safe Torque Off), SS1 (Safe Stop 1), 802
2811
Basic Functions, STO (Safe Torque Off), safe pulse cancellation, 803
2814
Basic functions, SBC (Safe Brake Control), 804
2820
Extended Functions, SLS (Safely-Limited Speed), 805
2825
Extended Functions, SS1, SS2, SOS, internal STOP B, C, D, F, 806
2840
Extended Functions, control word and status word, 807

2846
Extended Functions, parameter manager, 808
2850
Extended Functions, fail-safe digital inputs (F-DI 0 ... F-DI 2), 809
2853
Extended Functions, fail-safe digital output (F-DO 0), 810
2855
Extended Functions, control interface, 811
2856
Extended Functions, Safe State selection, 812
2857
Extended Functions, assignment (F-DO 0), 813
2858
Extended Functions, control via PROFIsafe (p9601.2 = p9601.3 = 1), 814
2860
Extended Functions, SSM (Safe Speed Monitor), 815
2861
Extended Functions, SDI (Safe Direction), 816
3010
Fixed speed setpoints, 818
3020
Motorized potentiometer, 819
3030
Main/supplementary setpoint, setpointscaling, jogging, 820
3040
Direction limitation and direction reversal, 821
3050
Skip frequency bands and speedlimitations, 822
3060
Basic ramp-function generator, 823
3070
Extended ramp-function generator, 824
3080
Ramp-function generator selection, -status word, -tracking, 825
3095
Generation of the speed limits (r0108.8 = 0), 827
3610
Jog mode (r0108.4 = 1), 829
3612
Referencing/reference point approach mode (r0108.4 = 1, p2597 = 0signal), 830
3614
Flying referencing mode (r0108.4 = 1, p2597 = 1 signal), 831
3615
Traversing block mode, external block change mode (r0108.4 = 1), 832
3616
Traversing block mode (r0108.4 = 1), 833
3617
Travel to fixed stop (r0108.4 = 1), 834
3618
Direct setpoint input/MDI mode, dynamic values (r0108.4 = 1), 835
3620
Direct setpoint input/MDI mode (r0108.4 = 1), 836
3625
Mode control (r0108.4 = 1), 837
3630
Traversing range limits (r0108.4 = 1), 838
3635
Interpolator (r0108.4 = 1), 839
3640
Control word, block selection/MDI selection (r0108.4 = 1), 840
3645
Status word 1 (r0108.3 = 1, r0108.4 = 1), 841
3646
Status word 2 (r0108.3 = 1, r0108.4 = 1), 842
3650
Status word, active traversing block/MDI active (r0108.4 = 1), 843
4010
Position actual value preprocessing (r0108.3 = 1), 845
4015
Position controller (r0108.3 = 1), 846
4020
Standstill/positioning monitoring (r0108.3 = 1), 847
4025
Dynamic following error monitoring, cam controllers (r0108.3 = 1), 848
4704
Position and temperature sensing, encoders 1 ... 2, 850
4710
Speed actual value and pole pos. sensing, motor encoder (encoder 1), 851
4720
Encoder interface, receive signals, encoders 1 ... 2, 852
4730
Encoder interface, send signals, encoders 1 ... 2, 853
4735
Reference mark search with equivalent zero mark, encoders 1, 854
4740
Measuring probe evaluation, measured value memory, encoders 1 to 2, 855
5020
Speed setpoint filter and pre-control, 857

5030
Reference model/pre-control balancing/speed limitation, 858
5040
Speed controller with encoder, 859
5042
Speed controller, torque/speed pre-control with encoder (p1402 = 1), 860
5050
Speed controller adaptation (Kp_n/Tn_n adaptation), 861
5060
Torque setpoint, control type changeover, 862
5210
Speed controller without encoder, 863
5300
U/f control, 864
5301
Variable signaling function, 865
5490
Speed control configuration, 866
5610
Torque limiting/reduction/interpolator , 867
5620
Motoring/generating torque limit, 868
5630
Upper/lower torque limit, 869
5640
Mode changeover, power/current limiting, 870
5650
Vdc_max controller and Vdc_min controller, 871
5710
Current setpoint filter, 872
5714
Iq and Id controllers, 873
5722
Field current/flux input, flux reduction, flux controller, 874
5730
Interface to the Power Module (control signals, current actual values), 875
7014
External Armature Short-Circuit (EASC, p0300 = 2xx or 4xx), 877
7017
DC brake (p0300 = 1xx), 878
7200
General, 880
7210
AND (AND function block with 4 inputs), 881
7212
OR (OR function block with 4 inputs), 882
7214
XOR (XOR function block with 4 inputs), 883
7216
NOT (inverter), 884
7220
ADD (adder with 4 inputs), SUB (subtracter), 885
7222
MUL (multiplier), DIV (divider), 886
7224
AVA (absolute value generator), 887
7230
MFP (pulse generator), PCL (pulse contractor), 888
7232
PDE (ON delay), PDF (OFF delay), 889
7234
PST (pulse stretcher), 890
7240
RSR (RS flip-flop), DFR (D flip-flop), 891
7250
BSW (binary switch), NSW (numeric switch), 892
7260
LIM (limiter), 893
7262
PT1 (smoothing element), 894
7264
INT (integrator), DIF (derivative-action element), 895
7270
LVM (double-sided limit monitor with hysteresis), 896
7950
Fixed values (r0108.16 = 1 and p2216[D] = 2), 898
7951
Fixed value selection direct (p2216 = 1), 899
7954
Motorized potentiometer (r0108.16 = 1), 900
7958
Closed-loop control (r0108.16 = 1), 901
8010
Speed signals 1, 903
8011
Speed signals 2, 904
8012
Torque signals, motor locked/stalled, 905
8014
Thermal monitoring, power unit, 906
8016
Thermal monitoring, motor, 907
8060
Fault buffer, 909
8065
Alarm buffer, 910
8070
Fault/alarm trigger word (r2129), 911
8075
Fault/alarm configuration, 912

8134
Measuring sockets, 913
8560
Command Data Set (CDS), 915
8565
Drive data set (DDS), 916
8570
Encoder Data Sets (EDS), 917
8575
Motor data sets (MDS), 918
9204
Receive telegram, free PDO mapping (p8744 = 2), 920
9206
Receive telegram, Predefined Connection Set (p8744 = 1), 921
9208
Send telegram, free PDO mapping (p8744 = 2), 922
9210
Send telegram, Predefined Connection Set (p8744 = 1), 923
9220
Control word CANopen, 924
9226
Status word, CANopen, 925
9912
BOP20 control word interconnection, 927

A

Access level (parameter), 21
Acknowledgement
Default, 935
IMMEDIATE, 933
POWER ON, 933
PULSE SUPPRESSION, 933
Settable, 935
Active (parameter, C1(x), C2(x), U, T), 20
Address
PROFIBUS / PROFINET, 742
Adjustable parameters, 17
Alarm
Cause, 936
Display, 930
Drive object, 935
Explanation of list, 934
Fault location, 935
General, 930
How to distinguish an alarm from a fault, 930
List of all alarms, 939
Message value, 935
Name, 935
Number, 934
Number range, 937
Remedy, 936
Alarm buffer, 908
Alarm value, 936
ASCII table, 1214
Axxxx, 934

B

Basic Operator Panel (BOP), 926
Basic positioner (EPOS), 828
Basic ramp-function generator, 823
BI, Binector Input, 18
BICO technology, 721
Binector
Input (BI), 18
Output (BO), 18
Bit field (parameter), 28
BO, Binector Output, 18
Brake Control
Basic, 793
Extended, 793
Brake control function block diagrams
Basic brake control (r0108.14 = 0), 794
Extended brake control, open/close brake (r0108.14 = 1), 796
Extended brake control, signal outputs (r0108.14 = 1), 797
Extended brake control, zero speed detection (r0108.14 = 1), 795

C

C1(x) - State commissioning device, 20
C2(x) - State commissioning drive, 20
Calculated (parameter), 21
Can be changed (parameter, C1(x), C2(x), U, T), 20
CANopen interface, 919
CDS, (Command Data Set), 23, 914, 915
CI, Connector Input, 18
Closed-loop control
Servo, 856
Technology controller, 901
Closed-loop speed control
Servo, 856
CO, Connector Output, 18
CO/BO, Connector/Binector Output, 18
Command data sets, 914
Connector
Input (CI), 18
Output (CO), 18
Control type, 862
Control Unit 305 (CU305)
Digital inputs, 732
Digital inputs/outputs, 732
Control words, 740
Internal, 777
Standard telegrams, 740

Converters
Binector-connector, 766
connector-binector, 764, 771
Cxxxxx, 934

D

Data set, 23, 914
Command data set, 23
Command data set, CDS, 23
Drive Data Set, 23
Drive Data Set, DDS, 23
Encoder data set, 23
Encoder data set, EDS, 23
Motor data set, 23
Motor Data Set, MDS, 23
Power unit data set, 23
Power unit Data Set, PDS, 23
Data type (parameter, signal source), 22
DC braking, 878
DCBRAKE, 932
DDS, drive data set, 23, 914, 916
Dependency (parameter), 28
Description (parameter), 27
Digital inputs
Control Unit 305 (CU305), 732
Digital inputs/outputs
Control Unit 305 (CU305), 732
Digital outputs
Control Unit 305 (CU305), 732
Direction limitation, 817, 821
Direction reversal, 817, 821
Directory
ASCII table, 1214
Display
Alarms, 930
Faults, 930
DO, Drive Object, 18
Drive Data Sets, 914
Drive object, 18

E

EDS, (Encoder Data Set), 23, 914, 917
ENCODER, 932
Encoder code, 1245
Encoder data sets, 914
Encoder evaluation, 849
Expert list, 27
Explanations about function block diagrams, 717
Extended ramp-function generator, 824
External Armature Short-circuit (EASC), 877

F

Factory setting, 26
Fault
Acknowledgement, 933, 935
Cause, 936
Display, 930
Drive object, 935
Explanation of list, 934
Fault location, 935
Fault reaction, 931, 935
General, 930
How to distinguish a fault from an alarm, 930
List of all faults, 939
Message value, 935
Name, 935
Number, 934
Number range, 937
Remedy, 936
Fault buffer, 908
Set-up, 909
Fault value, 936
Faults/alarms configuration, 908
Faults/alarms triggering (r2129), 908
Fixed speed setpoints, 817, 818
Fixed values, 719, 898
Free function blocks (FBLOCKS), 879
Free interconnection via BICO, 740
Free interconnection, status words, 766
Function (parameter), 27
Function block diagrams, Basic Operator Panel 20 (BOP20)
Control word BOP20 interconnection, 927
Function block diagrams, data sets
Command Data Set (CDS), 915
Drive data set (DDS), 916
Encoder Data Sets (EDS), 917
Motor data sets (MDS), 918
Function block diagrams, explanations
Explanation of the symbols (part 1), 718
Explanation of the symbols (part 2), 719
Explanation of the symbols (part 3), 720
Handling BICO technology, 721
Function block diagrams, internal control/status words
Control word sequence control, 778
Control word, faults/alarms, 788
Control word, setpoint channel, 780
Control word, speed controller, 781
Status word closed-loop control, 783
Status word sequence control, 779
Status word, closed-loop current control, 784
Status word, faults/alarms 1 and 2, 789
Status word, monitoring functions 1, 785
Status word, monitoring functions 2, 786
Status word, monitoring functions 3, 787
Status word, speed controller, 782

Function block diagrams, PROFIdrive
A_DIGITAL interconnection, 775
CU_STW1 control word, Control Unit interconnection, 773
CU_ZSW1 status word, Control Unit interconnection, 774
E_DIGITAL interconnection, 776
IF1 receive telegram, free interconnection via BICO (p0922 = 999), 764, 771
IF1 send telegram, free interconnection via BICO (p0922 = 999), 765, 772
IF1 status words, free interconnection, 766
Manufacturer-specific telegrams and process data, 744
Manufacturer-specific/free telegrams and process data, 745
MDI_MOD-MDI mode interconnection (r0108.4 = 1), 770
MELDW status word interconnection, 758
POS_STW positioning control word interconnection (r0108.4 = 1), 759
POS_STW1 positioning control word 1 interconnection (r0108.4 = 1), 760
POS_STW2 positioning control word 2 interconnection (r0108.4 = 1), 761
POS_ZSW1 positioning status word 1 interconnection (r0108.4 = 1), 762
POS_ZSW2 positioning status word 2 interconnection (r0108.4 = 1), 763
PROFIBUS (PB) / PROFINET (PN), addresses and diagnostics, 742
PZD receive signals interconnection, manufacturer-specific, 747
PZD receive signals interconnection, profile-specific, 746
PZD send signals interconnection, manufacturer-specific, 753
PZD send signals interconnection, profile-specific, 752
SATZANW block selection interconnection (r0108.4 = 1), 768
Standard telegrams and process data, 743
STW1 control word interconnection (p2038 = 0), 748
STW1 control word interconnection (p2038 = 1), 749
STW1 control word 1 interconnection (r0108.4 = 1), 767
STW2 control word interconnection (p2038 = 0), 750
STW2 control word interconnection (p2038 = 1), 751
ZSW1 status word interconnection (p2038 = 0), 754
ZSW1 status word interconnection (p2038 = 1), 755
ZSW1 status word 1 interconnection (r0108.4 = 1), 769
ZSW2 status word interconnection (p2038 = 0), 756
ZSW2 status word interconnection (p2038 = 1), 757
Function block diagrams, sequence control
Missing enable signals, line contactor control, logic operation, 792
Sequencer, 791
Function block diagrams, signals and monitoringfunctions
Speed signals 1, 903
Speed signals 2, 904
Thermal monitoring, motor, 907
Thermal monitoring, power unit, 906
Torque signals, motor locked/stalled, 905
Function diagrams, basic positioner (EPOS)
Control word, block selection/MDI selection (r0108.4 = 1), 840
Direct setpoint input/MDI mode (r0108.4 = 1), 836
Direct setpoint input/MDI mode, dynamic values (r0108.4 = 1), 835
Flying referencing mode (r0108.4 = 1, p2597 = 1 signal), 831
Interpolator (r0108.4 = 1), 839
Jog mode (r0108.4 = 1), 829
Mode control (r0108.4 = 1), 837
Referencing/reference point approach mode (r0108.4 = 1, p2597 = 0signal), 830
Status word 1 (r0108.3 = 1, r0108.4 = 1), 841
Status word 2 (r0108.3 = 1, r0108.4 = 1), 842
Status word, active traversing block/MDI active (r0108.4 = 1), 843
Travel to fixed stop (r0108.4 = 1), 834
Traversing block mode (r0108.4 = 1), 833
Traversing block mode, external block change mode (r0108.4 = 1), 832
Traversing range limits (r0108.4 = 1), 838
Function diagrams, CANopen interface
Control word CANopen, 924
Receive telegram, free PDO mapping (p8744 = 2), 920
Receive telegram, Predefined Connection Set (p8744 = 1), 921
Send telegram, free PDO mapping (p8744 = 2), 922
Send telegram, Predefined Connection Set (p8744 = 1), 923
Status word, CANopen, 925
Function diagrams, CU305 input/output terminals
Analog input (AI), 739
Digital inputs, electrically isolated (DI 0 ... DI 3), 733
Digital inputs, electrically isolated (DI 16 ... DI 19), 734
Digital inputs, electrically isolated (DI 20 ... DI 22), 735
Digital inputs/outputs, bidirectional (DI/DO 10 to DI/DO 11), 737
Digital inputs/outputs, bidirectional (DI/DO 8 to DI/DO 9), 736
Digital output (DO 16), 738

Function diagrams, diagnostics
Alarm buffer, 910
Fault buffer, 909
Fault/alarm configuration, 912
Fault/alarm trigger word (r2129), 911
Measuring sockets, 913
Function diagrams, encoder evaluation
Encoder interface, receive signals, encoders 1 ... 2, 852
Encoder interface, send signals, encoders 1 ... 2, 853
Measuring probe evaluation, measured value memory, encoders 1 to 2, 855
Position and temperature sensing, encoders 1 ... 2, 850
Reference mark search with equivalent zero mark, encoders 1, 854
Speed actual value and pole pos. sensing, motor encoder (encoder 1), 851
Function diagrams, free function blocks
ADD (adder with 4 inputs), 885
AND (AND function block with 4 inputs), 881
AVA (absolute value generator), 887
BSW (binary switch), 892
DFR (D flip-flop), 891
DIF (derivative-action element), 895
DIV (divider), 886
General, 880
INT (integrator), 895
LIM (limiter), 893
LVM (double-sided limit monitor with hysteresis), 896
MFP (pulse generator), 888
MUL (multiplier), 886
NOT (inverter), 884
NSW (numeric switch), 892
OR (OR function block with 4 inputs), 882
PCL (pulse contractor), 888
PDE (ON delay), 889
PDF (OFF delay), 889
PST (pulse stretcher), 890
PT1 (smoothing element), 894
RSR (RS flip-flop), 891
SUB (subtracter), 885
XOR (XOR function block with 4 inputs), 883
Function diagrams, overviews
CU305 input/output terminals, 723
Internal control/status words, data sets, 725
Monitoring functions, faults, alarms, 731
PROFIdrive, 724
Servo control, current control, 730
Servo control, encoder evaluation (position, speed, temperature), 727
Servo control, generation of the torque limits, 729
Servo control, speed control and U/f- control, 728
Setpoint channel, 726
Function diagrams, position control
Cam controllers (r0108.3 = 1), 848
Dynamic following error monitoring (r0108.3 = 1), 848
Position actual value preprocessing (r0108.3 = 1), 845
Position controller (r0108.3 = 1), 846
Standstill/positioning monitoring (r0108.3 = 1), 847
Function diagrams, Safety Integrated
Basic functions, monitoring functions and faults/alarms, 800
Basic Functions, parameter manager, 799
Basic functions, SBC (Safe Brake Control), 804
Basic Functions, status words, 801
Basic Functions, STO (Safe Torque Off), safe pulse cancellation, 803
Basic Functions, STO (Safe Torque Off), SS1 (Safe Stop 1), 802
Extended Functions, assignment (F-DO 0), 813
Extended Functions, control interface, 811
Extended Functions, control via PROFIsafe (p9601.2 = p9601.3 = 1), 814
Extended Functions, control word and status word, 807
Extended Functions, fail-safe digital inputs (F-DI 0 ... F-DI 2), 809
Extended Functions, fail-safe digital output (F-DO 0), 810
Extended Functions, parameter manager, 808
Extended Functions, Safe State selection, 812
Extended Functions, SDI (Safe Direction), 816
Extended Functions, SLS (Safely-Limited Speed), 805
Extended Functions, SS1, SS2, SOS, internal STOP B, C, D, F, 806
Extended Functions, SSM (Safe Speed Monitor), 815

Function diagrams, servo control
Current setpoint filter, 872
Field current/flux input, flux reduction, flux controller, 874
Interface to the Power Module (control signals, current actual values), 875
Iq and Id controllers, 873
Mode changeover, power/current limiting, 870
Motoring/generating torque limit, 868
Reference model/pre-control balancing/speed limitation, 858
Speed control configuration, 866
Speed controller adaptation (Kp_n/Tn_n adaptation), 861
Speed controller with encoder, 859
Speed controller without encoder, 863
Speed controller, torque/speed pre-control with encoder (p1402 = 1), 860
Speed setpoint filter and pre-control, 857
Torque limiting/reduction/interpolator , 867
Torque setpoint, control type changeover, 862
U/f control, 864
Upper/lower torque limit, 869
Variable signaling function, 865
Vdc_max controller and Vdc_min controller, 871
Function diagrams, setpoint channel
Direction limitation and direction reversal, 821
Fixed speed setpoints, 818
Main/supplementary setpoint, setpointscaling, jogging, 820
Motorized potentiometer, 819
Ramp-function generator (basic), 823
Ramp-function generator (extended), 824
Ramp-function generator selection, -status word, -tracking, 825
Skip frequency bands and speedlimitations, 822
Function diagrams, setpoint channel not activated
Generation of the speed limits (r0108.8 = 0), 827
Function diagrams, technology controller
Closed-loop control (r0108.16 = 1), 901
Fixed value selection direct (p2216 = 1), 899
Fixed values (r0108.16 = 1 and p2216[D] = 2), 898
Motorized potentiometer (r0108.16 = 1), 900
Function diagrams, technology functions
DC brake (p0300 = 1xx), 878
External Armature Short-Circuit (EASC, p0300 = 2xx or 4xx), 877
Function Module, 18
Fxxxx, 934

G

General
About parameters, 16
on faults and alarms, 930
on function diagrams, 717

I

IASC, 932
Index
Factory setting, 28
Parameter, 17, 28
Industrial security, 13
Input terminals
Control Unit 305 (CU305), 732
Internal control/status words, 777

J

Jogging, 817, 820

L

Line contactor control, 792
Linked parameters, 17
List
Abbreviations, 1247
ASCII table, 1214
Complete table of contents, 9
Encoder code, 1245
Faults and alarms, 939
Index, 1257
List of abbreviations, 1247
Message ranges, 937
Motor code, 1217
Parameter ranges, 30
Parameters for command data sets, 698
Parameters for drive data sets, 700
Parameters for encoder data sets, 704
Parameters for motor data sets, 705
Parameters for power unit data sets, 708
Parameters, all, 33
Table of contents, function diagrams, 710
List of abbreviations, 1247
Load monitoring (r0108.17 = 1), 902

M

Main/supplementary setpoint, 817
Manufacturer-specific telegrams, 740
MDS, Motor Data Set, 23, 914, 918
Measuring sockets, 908
Message buffer, 908
Message value, 935
Messages, 902
Missing enables, 792
Monitoring functions, 902
Monitoring parameters, 17

Motor code, 1217
Motor data sets, 914
Motorized potentiometer, 817, 819, 900

N

Name
  Alarm, 935
  Fault, 935
  Parameter, 18
Normalization, 27
Not for motor type, 26
Number
  Alarm, 934
  Fault, 934
  Parameter, 17
Number range
  Alarms, 937
  Faults, 937
  Parameters, 30

O

Object, 18
OFF1, 931
OFF1_DELAYED, 931
OFF2, 931
OFF3, 932
Output terminals
  Control Unit 305 (CU305), 732

P

Parameter
  Calculated, 21
  Description, 27
  Dynamic index, 23
  Expert list, 27
  Full name, 18
  Function, 27
  Index, 17, 28
  Linked parameters, 17
  List of all parameters, 33
  List of parameters for commanddata sets, 698
  List of parameters for drive data sets, 700
  List of parameters for encoder data sets, 704
  List of parameters for motordata sets, 705
  List of parameters for power unitdata sets, 708
  Name, 18
  Normalization, 27
  Not for motor type, 26
  Number, 17
  P-Group, 23
  Safety instructions, 29
  Short name, 18
  Unit, 24
  Unit group, 24
  Unit selection, 24
  Values, 27
Parameters
  Access level, 21
  Can be changed, 20
  Data type, 22
  Number range, 30
Password for access level 4, 21
PDS, (Power unit Data Set), 23, 914
P-Group (parameter), 23
PID controller (p0108.16 = 1), 897
Position control, 844
Power unit data sets, 914
Process data, 740
PROFIdrive, 740
pxxxx, 17

R

Ramp-function generator, 817
Reaction to faults, 931
Release/apply brake, 796
Resetting faults, 935
rxxxx, 17

S

Safety instructions
  Fundamental, 11
  General, 12
  Industrial security, 13
Safety instructions (parameter), 29

Safety Integrated
Basic Functions, 798
Extended functions, 798
Sequence control, 790
Sequencer, 791
Servo control
Control type changeover, 862
Current setpoint filter, 872
Encoder evaluation, 849
Iq and Id controllers, 873
Kp_n-/Tn_n adaptation, 861
Speed controller, 859
Speed controller without encoder, 863
Speed setpoint filter and pre-control, 857
Table of contents, 856
Torque setpoint, 862
U/f control, 864
Variable signaling function, 865
Setpoint channel, 817
Setpoint channel not activated, 826
Signal path in function diagrams, 718
Signals, 902
Skip frequency bands, 817, 822
Speed signals, 902
Status words
Internal, 777
Standard telegrams, 740
STOP1, 932
STOP2, 932

T

T - Ready state, 20
Technology controller (p0108.16 = 1), 897
Technology functions, 876
Telegrams, 740
Terminals
Control Unit 305 (CU305), 732
Thermal monitoring, 902
Torque signals, 902

U

U - Operation state, 20
U/f control
Servo, 864
Unit (parameter), 24

V

Values (parameter), 27
Variable signaling function, 865
Version
List of all parameters, 33
List of faults and alarms, 939
List of parameters for commanddata sets, 698
List of parameters for drive data sets, 700
List of parameters for encoder data sets, 704
List of parameters for motordata sets, 705
List of parameters for power unitdata sets, 708

Siemens AG
Digital Factory
Motion Control
Postfach 3180
91050 ERLANGEN
GERMANY

Subject to change
© Siemens AG 2008 - 2015

www.siemens.com/motioncontrol